TUNG-SOL

CATHODE RAY

THE 19AP4, 19AP4A, 19AP4B, 19AP4C, AND 19AP4D ARE DIRECT VIEW PICTURE TUBES DESIGNED FOR USE IN TELEVISION APPLICATIONS. THEY ARE IDENTICAL EXCEPT FOR THE FOLLOWING DIFFERENCES IN THEIR FACEPLATES.

19AP4 - CLEAR GLASS FACEPLATE
19AP4A - GREY FILTER FACEPLATE
19AP4B - FROSTED FILTER FACEPLATE
19AP4C - GREY FILTER FACEPLATE ALUMINIZED SCREEN
19AP4D - CLEAR FROSTED FACEPLATE

THEIR COMMON FEATURES INCLUDE:

UNIPOTENTIAL CATHODE
ROUND METAL CONSTRUCTION
MAGNETIC FOCUS AND DEFLECTION
EXTERNAL SINGLE FIELD ION TRAP
11 3/4" X 15 3/4" RASTER SIZE

ELECTRICAL DATA

FOCUSING METHOD		MAGNETIC
DEFLECTING METHOD		MAGNETIC
DEFLECTION ANGLE (APPROX.)	66	DEGREES
DIRECT INTERELECTRODE CAPACITANCES, (APPROX.)		
CATHODE TO ALL OTHER ELECTRODES	5	μμf
GRID #1 TO ALL OTHER ELECTRODES	7	μμf

OPTICAL DATA

PHOSPHOR NUMBER		NO. 4
FLUORESCENT COLOR		WHITE
PHOSPHORESCENT COLOR		WHITE
PERSISTENCE		MEDIUM
FACEPLATE LIGHT TRANSMISSION AT CENTER (APPROX.)	66	PERCENT

MECHANICAL DATA

OVERALL LENGTH	21 1/2 ± 1/2	INCHES
GREATEST DIAMETER OF BULB	18 5/8 ± 1/8	INCHES
MINIMUM USEFUL SCREEN DIAMETER	17 3/8	INCHES
BULB CONTACT	METAL SHELL LIP	
BASE	SMALL SHELL DUODECAL 5 PIN	B5-57
BASING		12D

PIN CONNECTIONS

PIN 1 - HEATER
PIN 2 - GRID NO. 1
PIN 10 - GRID NO. 2
PIN 11 - CATHODE

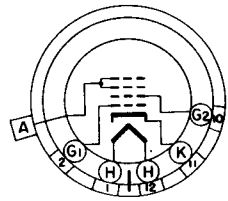

BOTTOM VIEW

PIN 12 - HEATER
METAL SHELL LIP: GRID NO. 3
ANODE

CONTINUED ON FOLLOWING PAGE

PRINTED IN U.S.A.

CONTINUED FROM PRECEDING PAGE

RATINGS

DESIGN CENTER VALUES

HEATER VOLTAGE	6.3	VOLTS
HEATER CURRENT	0.6	AMP.
MAXIMUM DC ANODE VOLTAGE[A]	19 000	VOLTS
MAXIMUM DC GRID #2 VOLTAGE	410	VOLTS
MAXIMUM GRID #1 VOLTAGE		
DC NEGATIVE-BIAS VALUE	125	VOLTS
DC POSITIVE-BIAS VALUE	0	VOLTS
POSITIVE-PEAK VALUE	2	VOLTS
MAXIMUM DC PEAK HEATER-CATHODE VOLTAGE		
HEATER NEGATIVE WITH RESPECT TO CATHODE		
DURING WARM-UP PERIOD NOT TO EXCEED 15 SECONDS	410	VOLTS
AFTER EQUIPMENT WARM-UP PERIOD	150	VOLTS
HEATER POSITIVE WITH RESPECT TO CATHODE	150	VOLTS

[A] IF THIS TUBE IS OPERATED AT VOLTAGES IN EXCESS OF 16,000 VOLTS X-RAY RADIATION SHIELDING MAY BE NECESSARY TO AVERT POSSIBLE DANGER OF PERSONAL INJURY FROM PROLONGED EXPOSURE AT CLOSE RANGE.

TYPICAL OPERATING CONDITIONS AND CHARACTERISTICS

DC ANODE VOLTAGE	12.000	VOLTS
DC GRID #2 VOLTAGE	300	VOLTS
DC GRID #1 VOLTAGE[B]	-33 TO -77	VOLTS
DC FOCUSING COIL CURRENT[C] (APPROX.)	140 ± 20%	MA.
DC ION TRAP CURRENT STANDARD COIL #111 (APPROX.)	75 ± 50%	MA.

[B] VISUAL EXTINCTION OF UNDEFLECTED FOCUSED SPOT.

[C] FOR STANDARD FOCUS COIL #106, OR EQUIVALENT, WITH THE COMBINED GRID #1 BIAS VOLTAGE AND VIDEO SIGNAL VOLTAGE ADJUSTED TO PRODUCE A HIGHLIGHT BRIGHTNESS OF 18 FOOT LAMBERTS ON A 11 3/4" X 15 3/4" PICTURE SIZE. DISTANCE FROM REFERENCE LINE TO CENTER OF AIR GAP ON FOCUS COIL SHALL BE 3.0 INCHES.

CIRCUIT VALUES

MAXIMUM GRID #1 CIRCUIT RESISTANCE	1.5	MEGOHMS

TUNG-SOL

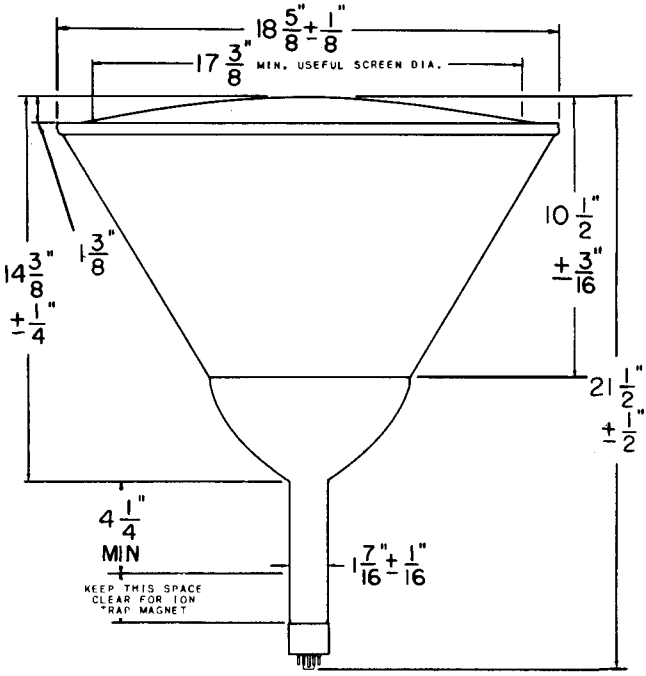

PRINTED IN U. S. A.