ELECTRON TUBE DEPARTMENT ■ COMPONENTS DIVISION
INTERNATIONAL TELEPHONE AND TELEGRAPH CORPORATION, CLIFTON, NEW JERSEY

KUTHE
3C45
HYDROGEN
THYRATRON

DESCRIPTION:

THE 3C45 IS A UNIPOTENTIAL CATHODE, THREE ELEMENT HYDROGEN FILLED THYRATRON DESIGNED FOR NETWORK DISCHARGE SERVICE. IN SUCH SERVICE IT IS SUITABLE FOR PRODUCING PULSE OUTPUTS OF 55 KW AT AN AVERAGE POWER LEVEL OF MORE THAN 65 WATTS. THE SPECIAL FEATURES OF THE 3C45 INCLUDE THE HIGH PEAK VOLTAGE AND CURRENT RATINGS.

ELECTRICAL DATA, GENERAL:

	Nom.	Min.	Max.	
Heater Voltage	6.3	5.7	6.6	Volts a.c.
Heater Current (at 6.3 Volts)		2.0	2.5	Amperes
Minimum Heating Time			2	Minutes

MECHANICAL DATA, GENERAL:

Mounting Position		Any
Base	Medium 4 Pin Phenolic	Low-Loss A4-9
Anode Cap	Small Metal	C1-1
Cooling (Note 1)		
Net Weight	2.5	Ounces
Dimensions		See Outline

RATINGS:

Max. Peak Anode Voltage, Forward	3.0	Kilovolts
Max. Peak Anode Voltage, Inverse (Note 2)	3.0	Kilovolts
Min. Anode Supply Voltage	800	Volts d.c.
Max. Peak Anode Current	35	Amperes
Max. Average Anode Current	45	Milliamperes
Max. RMS Anode Current (Note 3)	1.25	Amperes a.c.
Max. epy X ib X prr	0.3×10^9	
Max. Anode Current Rate of Rise	750	Amperes/usecond
Peak Trigger Voltage (Note 4)		
Max. Peak Inverse Trigger Voltage	200	Volts
Max. Anode Delay Time (Note 5)	0.6	Microsecond
Max. Anode Delay Time Drift	0.15	Microsecond
Max. Time Jitter (Note 6)	0.02	Microsecond (initial)
	0.04	uSecond (end of life)
Ambient Temperature	-50° to +90°	Cent.

TYPICAL OPERATION AS PULSE MODULATOR, DC RESONANT CHARGING:

Peak Network Voltage	3.0	Kilovolts
Pulse Repetition Rate	2500	Pulses/Second
Pulse Length	0.5	Microsecond
Pulse Forming Network Impedance	45.2	Ohms
Trigger Voltage	200	Volts
Peak Power Output (Resistive Load 92% Zn)	47.2	Kilowatts
Peak Anode Current	35	Amperes
Average Anode Current	.044	Amperes d.c.

Note 1:

Cooling of the anode lead is permissible, but there shall be no air blast directly on the bulb.

Note 2:

The peak inverse voltage should not exceed 1.5 KV during the first 25 microseconds after conduction.

Note 3:

The root mean square anode current shall be computed as the square root of the product of the peak current and the average current.

Note 4:

The voltage between grid and cathode terminals of the socket with the tube removed should have the following characteristics:

A.	Voltage	175-250 Volts
B.	Duration	2 Microseconds (at 70% Points)
C.	Source Impedance	1500 Ohms (max.)
D.	Rate of Rise	200 Volts/microsecond (min.)

The limits of anode time delay and anode time jitter are based on the minimum trigger. Using the highest permissible trigger voltage and lowest trigger source impedance materially reduces these values below the limits specified.

Note 5:

The Time of anode delay is measured between the 26 percent point on the rising portion of the unloaded grid voltage pulse and the point at which evidence of anode conduction first appears on the loaded grid pulse.

NOTE 6:

TIME JITTER IS MEASURED AT THE 50 PERCENT POINT ON THE ANODE CURRENT PULSE.

ADDITIONAL INFORMATION FOR SPECIFIC APPLICATIONS CAN BE OBTAINED FROM THE

ELECTRON TUBE APPLICATIONS SECTION
ITT COMPONENTS DIVISION
POST OFFICE BOX 412
CLIFTON, NEW JERSEY

1. HEATER
2. CATHODE
3. GRID
4. HEATER & CATHODE

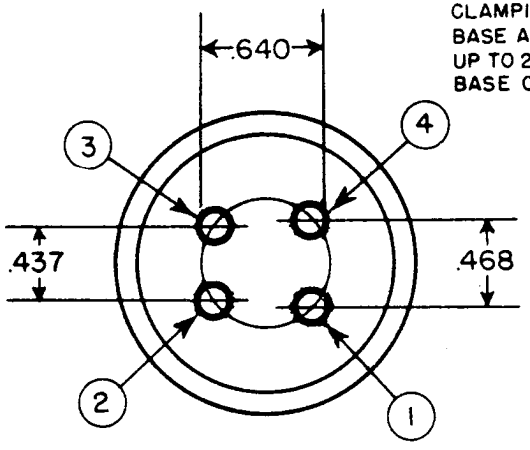

MEDIUM 4-PIN A4-9
LOW LOSS PHENOLIC BASE

CLAMPING IS PERMITTED BY THE BASE AND/OR BULB IN THE AREA UP TO 2" ABOVE TOP OF THE BASE ONLY

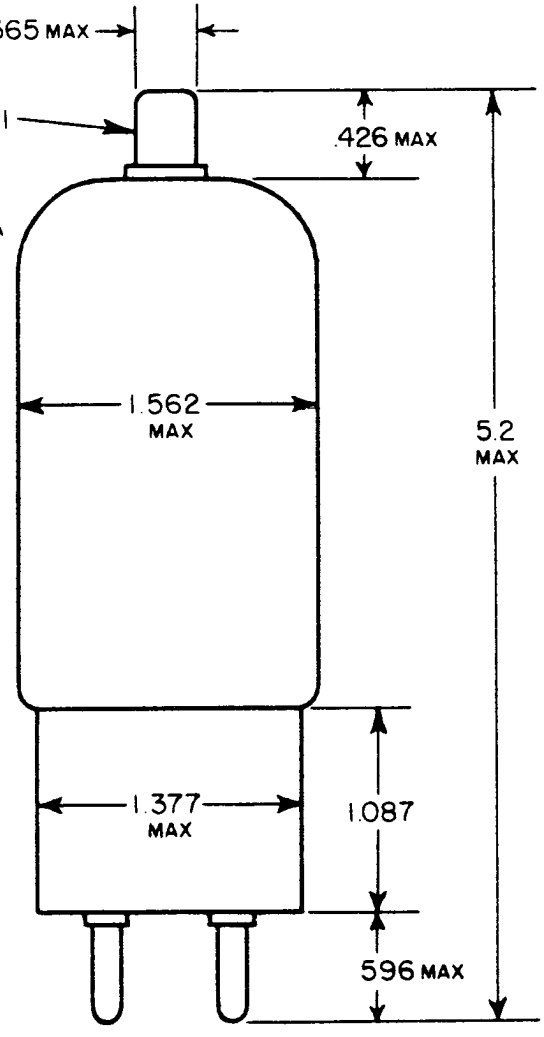

engineering TUBE DATA

Kuthe

ITT Components Division

TYPE 3C45W HYDROGEN THYRATRON

GENERAL DATA

DESCRIPTION:

The 3C45W is a unipotential cathode, three element hydrogen filled thyratron designed for network discharge service. In such service, it is suitable for producing pulse outputs of 55 KW at an average power level of more than 65 watts.

The reduced size and ruggedized construction of the 3C45W make it ideal for applications requiring a high resistance to shock and vibration. This tube type equipped with a reservoir for long stable life has the electrical ratings of the type 3C45.

Electrical Data, General	**Nom.**	**Min.**	**Max.**
Heater voltage	6.3	5.9	6.7 Volts a.c.
Heater current. E_h=6.3 volts		2.2	2.7 Amperes
Minimum heating time		3 Minutes	

Mechanical Data, General

Mounting position	Any
Base	Per outline
Anode Cap	Small metal, C1-1
Cooling	Note 1
Net Weight	2.5 Ounces

Dimensions

See outline drawing

Ratings

Max. peak anode voltage, forward	3.0 Kilovolts
Max. peak anode voltage, inverse (Note 2)	3.0 Kilovolts
Min. anode supply voltage	300 Volts d.c.
Max. peak anode current	35 Amperes
Max. average anode current	45 Milliamperes
Max. RMS anode current (Note 3)	1.25 Amperes a.c.
Max. epy x ib x prr	0.3 x 10^{11}
Max. anode current rate of rise	750 Amperes/μsecond
Peak trigger voltage	Note 4
Max. peak inverse trigger voltage	200 Volts
Max. anode delay time (Note 5)	0.6 Microsecond
Max. anode delay time drift	0.15 Microsecond
Max. time jitter (Note 6)	0.02 Microsecond (initial) 0.04 μsecond (end of life)
Ambient temperature	—50° to + 90° Cent.

Printed in U.S.A. 1-60

(Continued)

ITT COMPONENTS DIVISION
INTERNATIONAL TELEPHONE AND TELEGRAPH CORPORATION
P. O. BOX 412, CLIFTON, NEW JERSEY

Typical Operation as Pulse Modulator, DC Resonant Charging

Peak network voltage	3.0 Kilovolts
Pulse repetition rate	2500 Pulses/second
Pulse length	0.5 Microsecond
Pulse forming network impedance	45.2 Ohms
Trigger voltage	200 Volts
Peak power output (Resistive load 92% Zn)	47.2 Kilowatts
Peak anode current	35 Amperes
Average anode current	.044 Amperes d.c.

Note 1

Cooling permitted. However, there shall be no air blast directly on the bulb.

Note 2

The peak inverse voltage should not exceed 1.5 KV during the first 25 microseconds after conduction.

Note 3

The root mean square anode current shall be computed as the square root of the product of the peak current and the average current.

Note 4

The voltage between grid and cathode terminals of the socket with the tube removed should have the following characteristics:

A. Voltage ..... 175-250 Volts
B. Duration ..... 2 Microseconds (at 70% points)
C. Source of impedance .. 1500 Ohms (max.)
D. Rate of rise ..... 200 Volts/microsecond (min.)

The limits of anode time delay and anode time jitter are based on the minimum trigger. Using the highest permissible trigger voltage and lowest trigger source impedance materially reduces these values below the limits specified.

Note 5

The time of anode delay is measured between the 26 percent point on the rising portion of the unloaded grid voltage pulse and the point at which evidence of anode conduction first appears on the loaded grid pulse.

Note 6

Time jitter is measured at the 50 percent point on the anode current pulse.

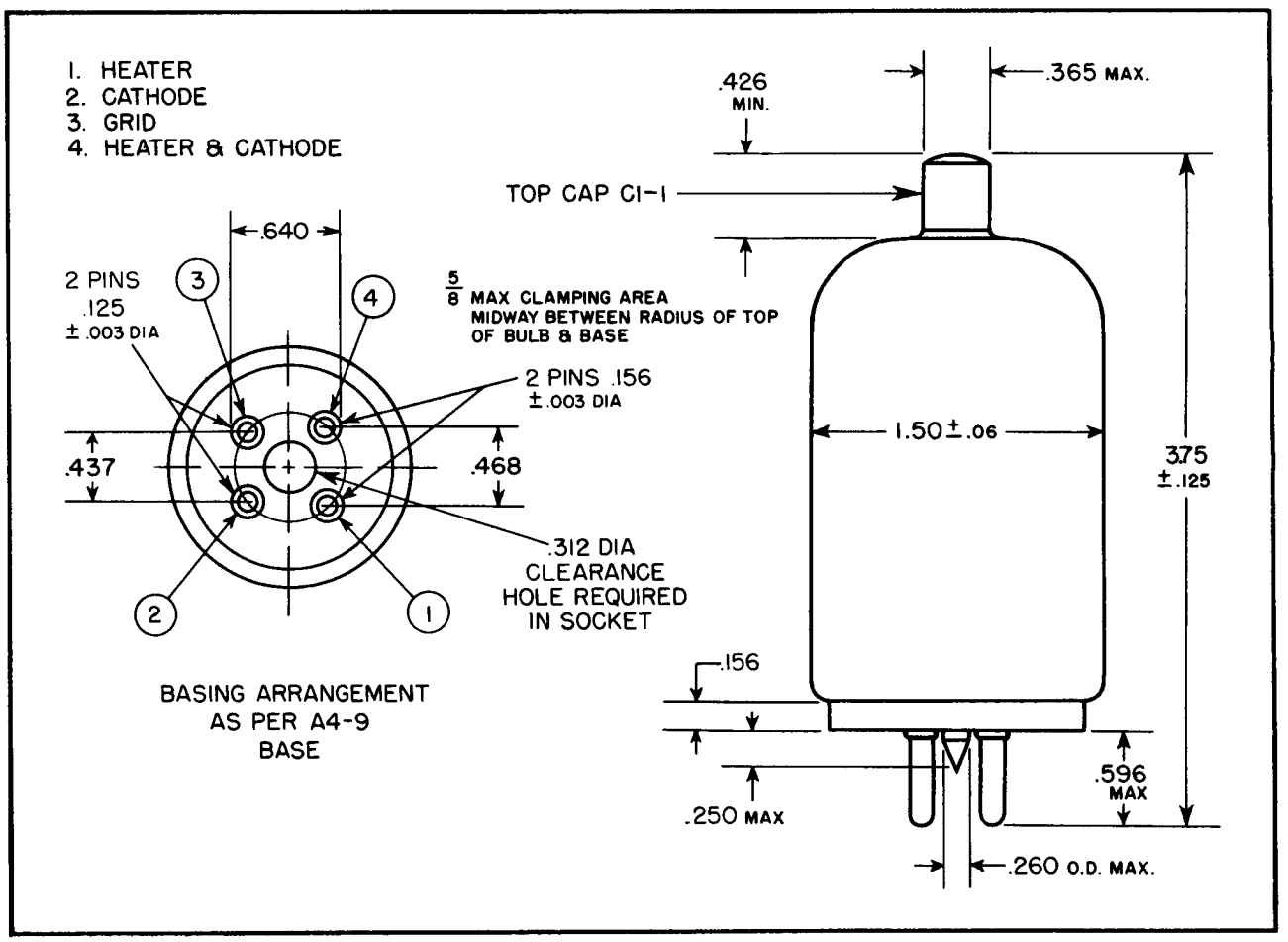

SPECIAL VALVES

Radiation-cooled R.F. Triode

Code: 3C/800E

The 3C/800E is designed for use in r.f. heating applications and may be operated up to 50 MHz.

CATHODE

Directly heated thoriated tungsten filament		
Filament voltage	6·3	V
Filament current (Note 1)	32·5	A
Maximum usable emission	4·0	A

Note 1 —The filament is suitable for direct switching without additional current limitations and will withstand voltage fluctuations of ±5%.

CHARACTERISTICS

Mutual conductance	At V_a = 4·0kV, I_a = 190mA	5·0	mA/V
Amplification factor		22	

INTERELECTRODE CAPACITANCES

Anode to grid	6·5	pF
Grid to filament	2·0	pF
Anode to filament	0·25	pF

AIR-COOLING REQUIREMENTS

Forced-air cooling is recommended for all conditions of service.

An air-flow of 50 ft³/min (1,42 m³/min) directed vertically upwards on to the filament and grid pins is adequate.

Maximum temperature of seals	220	°C
Maximum temperature of bulb	350	°C

MECHANICAL DATA

Dimensions	As shown in outline drawing
Mounting position	Vertical, base downwards (Note 2)

Note 2.—When the valve is operating at the higher frequencies it is essential that connection be made to both grid pins to reduce current taken by each pin. The valve should be protected against excessive vibration and shock.

Standard Telephones and Cables Limited
Valve Division, Brixham Road, Paignton, Devon
Telephone: Paignton 50762 Telex: 4230
London Sales Office, Telephone: 01-300 3333 Telex: 21836
C O M P O N E N T S G R O U P

STC

Code: 3C/800E

CONTINUED

MAXIMUM RATINGS AND TYPICAL OPERATING CONDITIONS
RADIO FREQUENCY

Class C. Power Oscillator (with d.c. anode supply)

Maximum Ratings

Maximum direct anode voltage	6·0	kV
Maximum direct anode current	750	mA
Maximum direct anode dissipation	800	W
Maximum direct grid voltage	—1·25	kV
Maximum direct grid current	300	mA
Maximum direct grid dissipation	120	W
Maximum grid to filament resistor	10	kΩ
Maximum duty factor	1·0	
Maximum frequency for above ratings	50	MHz

Typical Operating Conditions

Direct anode voltage	3·0	5·0	kV
Direct anode current (Note 3)	700 (220)	700 (220)	mA
Direct anode dissipation	546	788	W
Direct grid current (Note 3)	240 (400)	225 (370)	mA
Grid to filament resistor	1·5	2·5	kΩ
Anode efficiency	74	77·5	%
Power output	1·55	2·7	kW
Duty factor	1·0	1·0	

Class C. Power Oscillator (anode supply from single-phase, full-wave rectifier without smoothing filter)

Maximum Ratings

Maximum direct anode voltage	5·4	kV
Maximum direct anode current	670	mA
Maximum direct anode dissipation	800	W
Maximum direct grid voltage	—1·25	kV
Maximum direct grid current (Note 3)	270	mA
Maximum direct grid dissipation	120	W
Maximum grid to filament resistor	10	kΩ
Maximum duty factor	1·0	
Maximum frequency for above ratings	50	MHz

Code: 3C/800E

CONTINUED

Typical Operating Conditions			
Direct anode voltage	3·15	4·5	kV
Direct anode current (Note 3)	600 (190)	600 (190)	mA
Direct anode dissipation	620	750	W
Direct grid current (Note 3)	180 (300)	150 (250)	mA
Grid to filament resistor	1·5	2·5	kΩ
Anode efficiency	73	77	%
Power output	1·7	2·55	kW
Duty factor	1·0	1·0	

Class C. Power Oscillator (anode supply from three-phase half-wave rectifier)

Maximum Ratings		
Maximum direct anode voltage	6·0	kV
Maximum direct anode current	750	mA
Maximum direct anode dissipation	800	W
Maximum direct grid voltage	—1·25	kV
Maximum direct grid current	300	mA
Maximum direct grid dissipation	120	W
Maximum grid to filament resistor	10	kΩ
Maximum duty factor	1·0	
Maximum frequency for above ratings	50	MHz
Typical Operating Conditions		
Direct anode voltage	5·0	kV
Direct anode current (Note 3)	700 (220)	mA
Direct anode dissipation	780	W
Direct grid current (Note 3)	160 (270)	mA
Grid to filament resistor	2·5	kΩ
Anode efficiency	78	%
Power output	2·7	kW
Duty factor	1·0	

Note 3.—Subject to wide variation dependent upon the impedance of the load circuit. Typical off-load figures are shown in brackets.

STC

Code: 3C/800E

CONTINUED

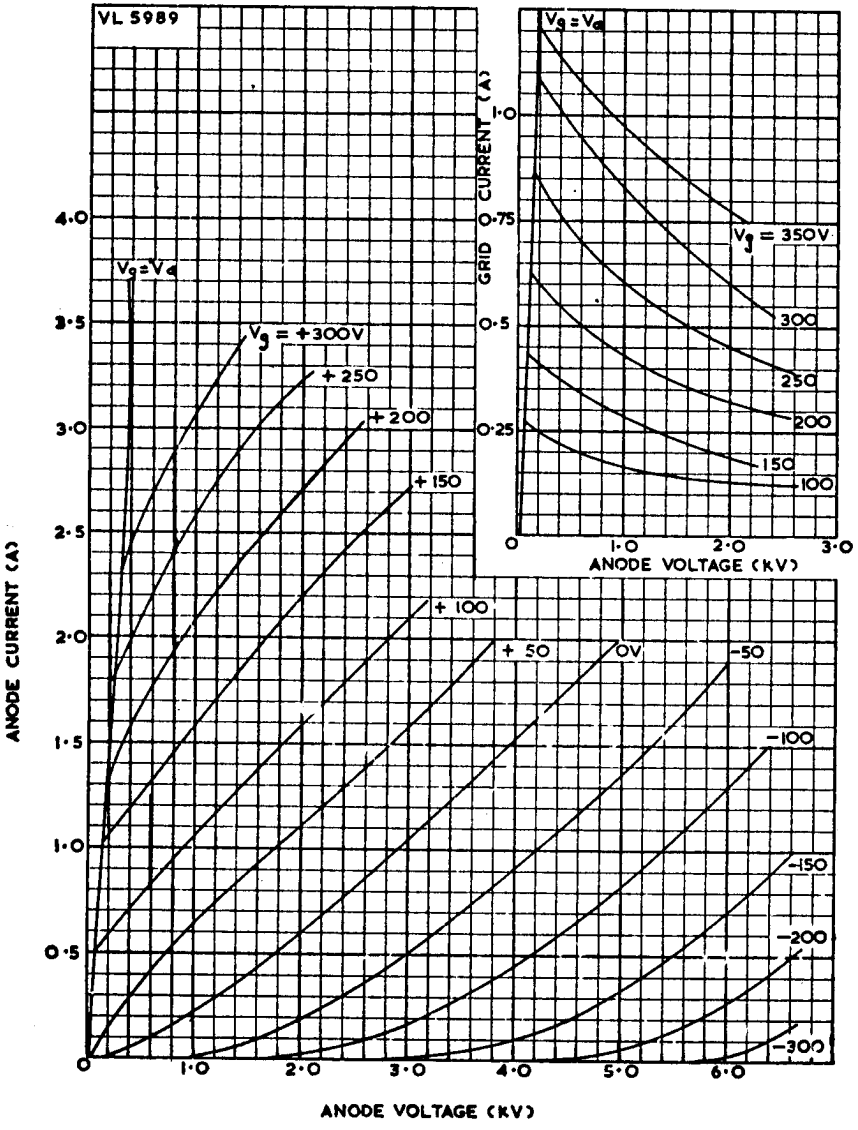

Code: 3C/800E

CONTINUED

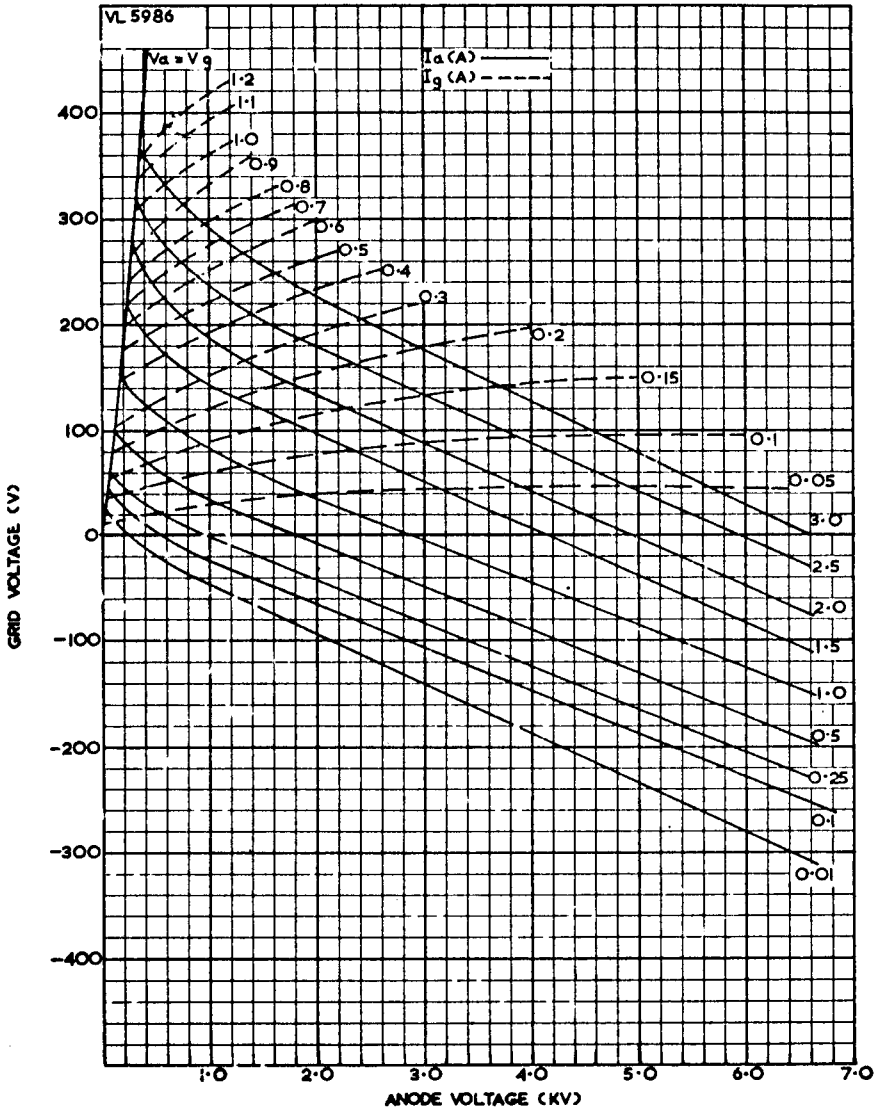

SPECIAL VALVES

Forced-Air-Cooled
Industrial Triode

Code: 3J/187E (Glass/metal envelope)
3JC/187E (Ceramic/metal envelope)

The 3J/187E and 3JC/187E, designed specifically for industrial heating applications, are capable of operation at frequencies up to 120 and 300 MHz respectively. Design features give a high mutual conductance, resulting in high efficiency with the low grid dissipation and large safety factor which are desirable when the valves are operated under variable-load conditions.

CATHODE

Thoriated-tungsten filament		
Filament voltage	5	V
Nominal current	78	A
Maximum usable emission (Note 1)	10	A
Cold filament resistance	0·0075	Ω

Note 1.—For a filament supply regulated to ±5 per cent.

It is recommended that some resistance or reactance be introduced into the filament supply to limit the surge peak current to about two and a half times the normal r.m.s. working value. This impedance may be short circuited as soon as the surge has decayed.

For operation at high frequencies (above 30 MHz) it is recommended that the r.f. return path to the cathode makes connection to the larger filament terminal.

CHARACTERISTICS

Amplification factor	$V_a = 2kV : I_a = 0{\cdot}25A$	12	
Mutual conductance	$V_a = 2kV : V_g = -75V$	22	mA/V

DIRECT INTERELECTRODE CAPACITANCES

Grid to anode	29	pF
Grid to filament	54	pF
Anode to filament	1·5	pF

Standard Telephones and Cables Limited
Valve Division, Brixham Road, Paignton, Devon
Telephone: Paignton 50762 Telex: 4230
London Sales Office, Telephone: 01-300 3333 Telex: 21836
C O M P O N E N T S G R O U P

STC

Code: 3J/187E (Glass/metal envelope)
3JC/187E (Ceramic/metal envelope)

CONTINUED

COOLING REQUIREMENTS

For air-cooling requirements see graphs on page 6.

	3J/187E	3JC/187E	
Maximum radiator core temperature	220	220	°C
Maximum seal temperature (Note 2)	180	220	°C

Note 2.—To ensure that the stem seals are kept below the stated temperatures it is necessary to direct into the grid flange a flow of cooling air of the order of 10 to 50 ft^3/min (0,28 to 1,42 m^3/min) dependent upon the circuit and frequency conditions.

MECHANICAL DATA

Dimensions — As shown in outline drawings.
Mounting position — Vertical: Anode upward or downward.

Accessories

The following approved items are supplied separately under the codes indicated:

214-LVA-001A Filament connector, smaller
214-LVA-001B Filament connector, larger
214-LVA-001C Grid connector
GC10 Glass support tube (see page 9)

MAXIMUM RATINGS AND TYPICAL OPERATING CONDITIONS

Class C. Industrial Heating R.F. Oscillator

MAXIMUM RATINGS

Maximum direct anode voltage (peak value of direct voltage plus ripple)	5·5	6·5	kV
Maximum direct anode current	2	2	A
Maximum direct anode dissipation (continuous)	3	3	kW
Maximum direct grid dissipation (continuous)	200	200	W
Maximum direct grid current (Note 3)	500	500	mA
Maximum negative grid bias	−1 500	−1 500	V
Maximum frequency for the above ratings 3J/187E	120	100	MHz
Maximum frequency for the above ratings 3JC/187E	300	220	MHz

Note 3.—This figure is given for guidance. Grid dissipation is absolute rating.

TYPICAL OPERATING CONDITIONS

Direct anode voltage	5	6	6·5	kV
Direct grid voltage	−560	−650	−720	V
Direct anode current	1·6	1·5	1·8	A
Peak r.f. grid voltage	760	890	970	V
Direct grid current (Note 4)	100 (140)	130 (190)	150 (200)	mA
Grid dissipation (Note 4)	25	55	55	W
Grid resistor	5·6	5	4·8	kΩ
Power input	8	9	11·7	kW
Output power (oscillator)	5·4	6·9	8·9	kW
Power into load at 85 per cent transfer efficiency	4·6	5·8	7·5	kW

Note 4.—Subject to wide variation dependent upon the impedance of the load circuit. The values of current shown in brackets are typical of off-load conditions but are given for guidance only: practical figures are dependent upon compensatory devices in the grid circuit.

Code: 3J/187E (Glass/metal envelope)
3JC/187E (Ceramic/metal envelope)

CONTINUED

Class B. A.F. Power Amplifier or Modulator
(for balanced two-valve operation)

MAXIMUM RATINGS

Maximum direct anode voltage	6	kV
Maximum direct anode current	2	A
Maximum direct anode dissipation (intermittent)	5	kW
Maximum direct anode dissipation (continuous)	4	kW
Maximum direct grid dissipation (continuous)	200	W
Maximum direct grid voltage	−1 500	V

TYPICAL OPERATING CONDITIONS

Direct anode voltage	5	kV
Direct grid voltage	−350	V
Direct anode current (zero signal) per valve	0·2	A
Direct anode current (maximum signal) per valve	1·9	A
Load resistor, anode to anode	2·7	kΩ
Peak a.f. grid to grid voltage	1 040	V
Grid drive power, approximately (2 valves)	85	W
Direct grid current, per valve	80	mA
Direct grid dissipation, per valve	14	W
Output power (2 valves)	12	kW

STC

Code: 3J/178E (Glass/metal envelope)
3JC/187E (Ceramic/metal envelope)

CONTINUED

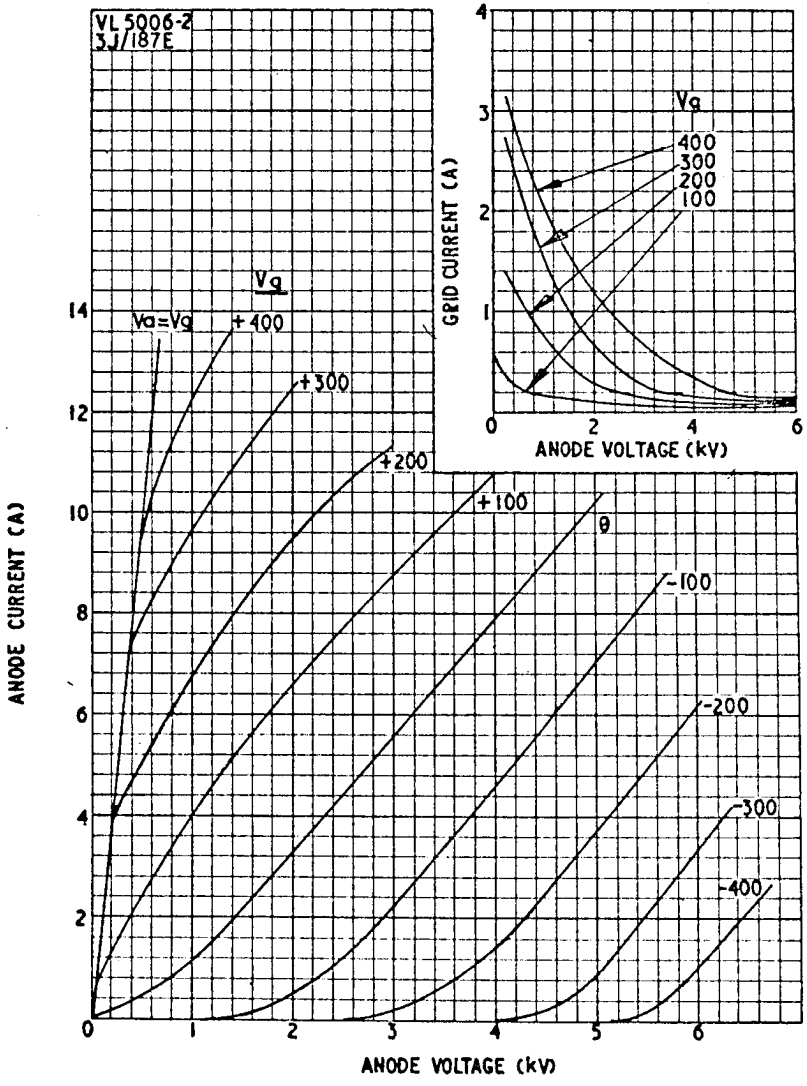

Code: 3J/187E (Glass/metal envelope)
3JC/187E (Ceramic/metal envelope)

CONTINUED

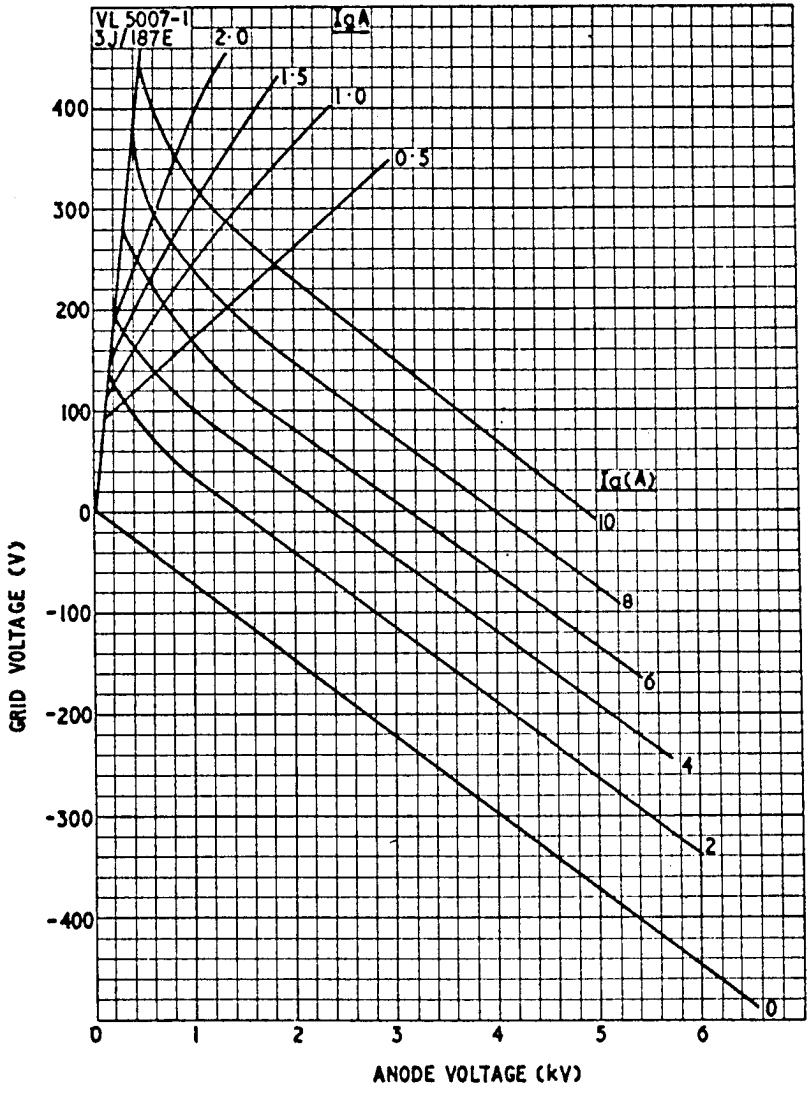

STC

Code: 3J/187E (Glass/metal envelope)
3JC/187E (Ceramic/metal envelope)

CONTINUED

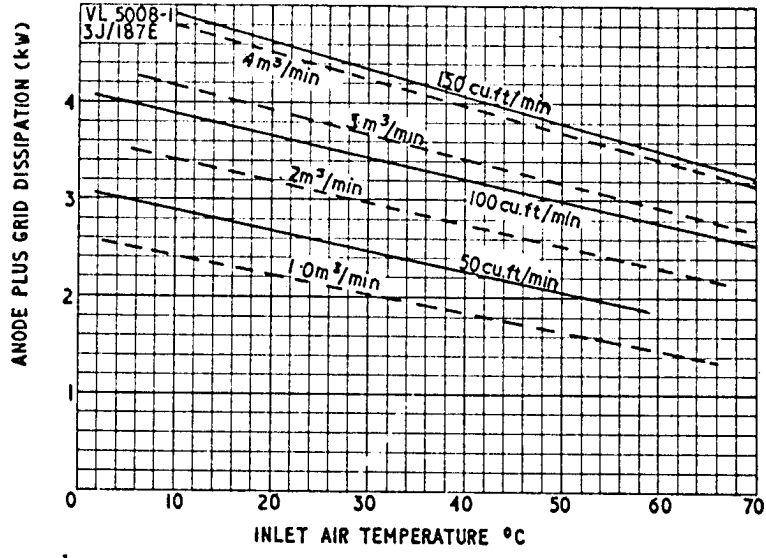

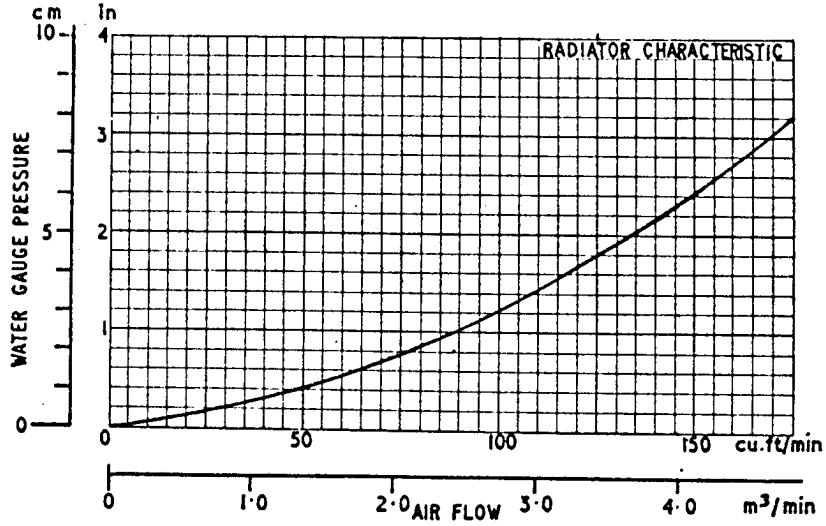

Code: 3J/187E (Glass/metal envelope)

CONTINUED

3J/187E Outline

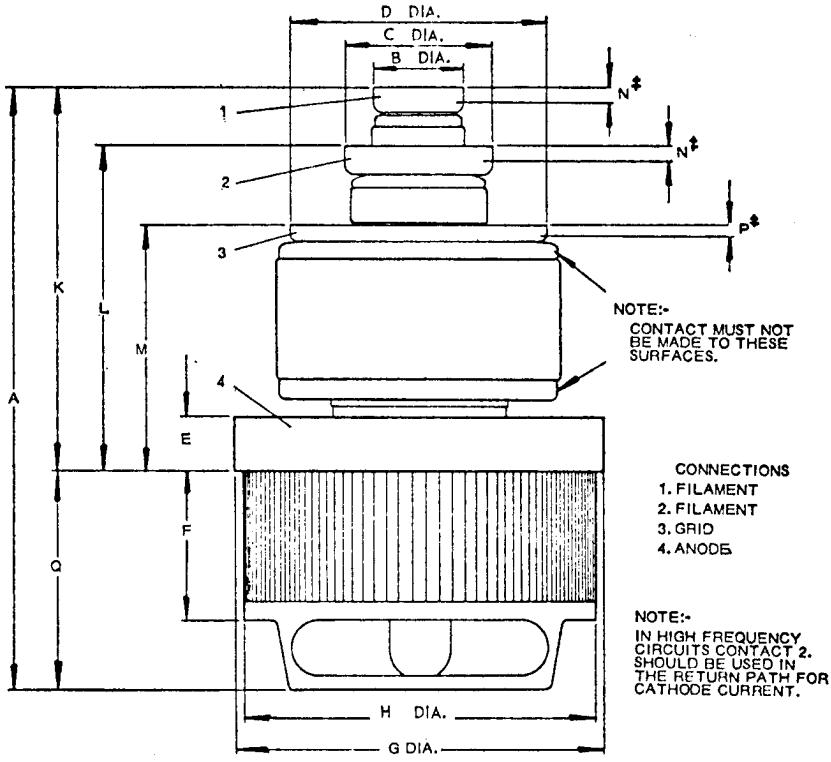

DIM.	MILLIMETRES	INCHES	DIM.	MILLIMETRES	INCHES
A	227,0 MAX.	8.15/16 MAX.	H	120,7 ± 0,8	4.3/4 ± 1/32
B	31,8 ± 0,4	1.1/4 ± 1/64	K	145,3 ± 4,8	5.23/32 ± 3/16
C	50,8 ± 0,4	2 ± 1/64	L	122,2 ± 4,8	4.13/16 ± 3/16
D	88,9 ± 0,4	3.1/2 ± 1/64	M	88,9 ± 3,2	3.1/2 ± 1/8
E	19,1 ± 1,6	3/4 ± 1/16	N	4,7 MIN. 6,4 MAX.	3/16 MIN. 1/4 MAX.
F	50,8 ± 1,6	2 ± 1/16	P	3,1 MIN. 4,8 MAX.	1/8 MIN. 3/16 MAX.
G	127,0 ± 0,8	5 ± 1/32	Q	74,6 ± 1,6	2.15/16 ± 1/16

NOTE:—BASIC FIGURES ARE IN INCHES
‡ DENOTES:—CONTACT LENGTH

STC

Code: 3JC/187E (Ceramic/metal envelope)

CONTINUED

3JC/187E Outline

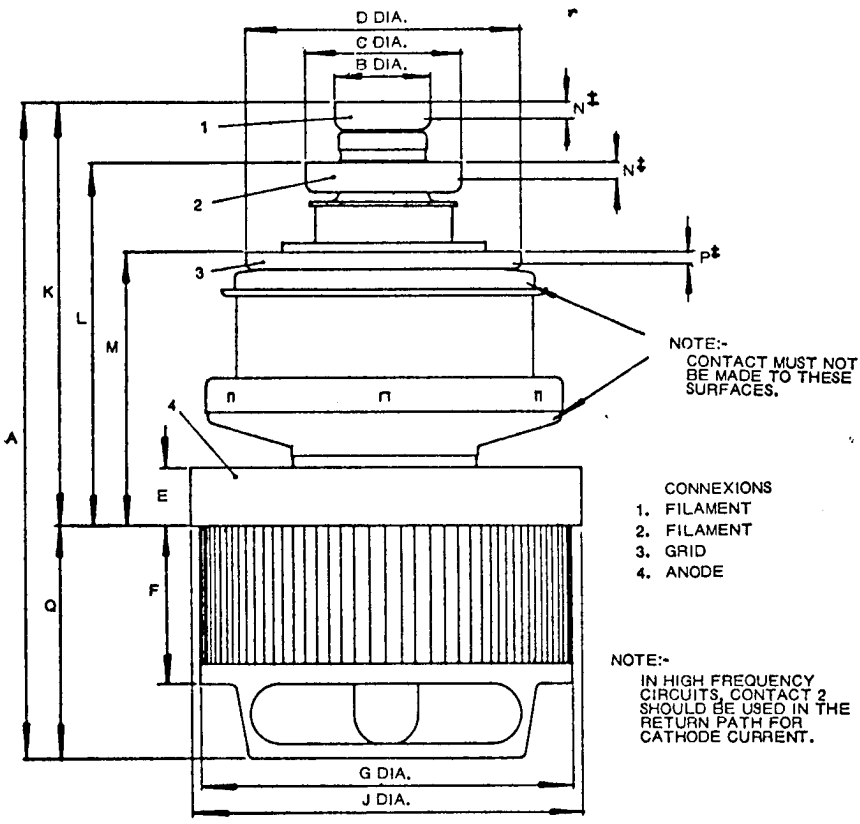

DIM.	MILLIMETRES	INCHES	DIM.	MILLIMETRES	INCHES
A	217,5 MAX.	8.9/16 MAX.	J	127,0 ± 0,8	5 ± 1/32
B	31,8 ± 0,4	1.1/4 ± 1/64	K	134,9 ± 6,4	5.5/16 ± 1/4
C	50,8 ± 0,4	2· ± 1/64	L	115,1 ± 4,8	4.17/32 ± 3/16
D	88,9 ± 0,4	3.1/2 ± 1/64	M	88,1 ± 3,2	3.15/32 ± 1/8
E	19,1 ± 1,6	3/4 ± 1/16	N	4,7 MIN. 6,4 MAX.	3/16 MIN. 1/4 MAX.
F	50,8 ± 1,6	2 ± 1/16	P	3,1 MIN. 4,8 MAX.	1/8 MIN. 3/16 MAX.
G	120,7 ± 0,8	4.3/4 ± 1/32	Q	74,6 ± 1,6	2.15/16 ± 1/16

NOTE:—BASIC FIGURES ARE IN INCHES
‡ DENOTES:—CONTACT LENGTH

GLASS SUPPORT TUBE

Code: GC10

GC10 Outline

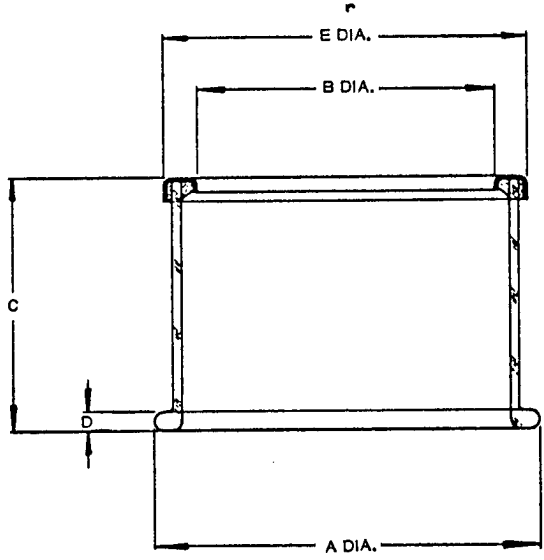

DIM	INCHES	MILLIMETRES
A	6 MIN. 6.3/8 MAX.	152,4 MIN. 161,9 MAX.
B	4·782 $^{+\ 0{\cdot}015}_{-\ 0{\cdot}000}$	121,46 $^{+\ 0{,}38}_{-\ 0{,}00}$
C	4.1/16 ± 3/16	103,2 ± 4,8
D	1/4 MIN. 3/8 MAX.	6,3 MIN. 9,5 MAX.
E	5.7/8 MAX.	149,2 MAX.

BASIC DIMS. ARE INCHES

© 1967 Standard Telephones and Cables Limited

Forced-Air-Cooled Industrial Triode

Ref.: 3J/202E

Code: 3J/202E

CATHODE

Thoriated-tungsten filament

Filament voltage	5 ± 2%	5 ± 5%	V
Filament current (nominal)		112	A
Maximum usable emission	18	12	A
Filament cold resistance		0.007	Ω

It is recommended that some resistance or reactance should be introduced into the filament supply to limit the switch or surge current to about two and a half times the normal working value. This impedance may be short circuited if desired as soon as the surge has decayed.

PIRANI TEST*

I_f	12	A
V_f range	0.07 to 10.1	V
Approx. measuring time	60	min

* See card supplied with individual valve for actual test figures.

CHARACTERISTICS

Amplification factor (at V_a 2kV, I_a 0.25A)	16	
Mutual conductance (at V_a 2kV, V_g −75V)	32	mA/V

DIRECT INTERELECTRODE CAPACITANCES

Grid to anode	30	pF
Grid to filament	60	pF
Anode to filament	1.5	pF

ITT Components Group Europe
Standard Telephones and Cables Limited
Valve Product Division, Brixham Road, Paignton, Devon
Telephone: Paignton 50762 (STD Code 0803) Telex: 42830

ITT COMPONENTS

© International Telephone and Telegraph Corporation.
All rights reserved.

COOLING REQUIREMENTS

For air-cooling requirements see graphs on page 6.

Maximum radiator core temperature	220	°C
Maximum seal temperature (Note 1)	180	°C

Note 1.—To ensure that the stem seals are kept below the stated temperatures, it is necessary to direct into the grid flange a flow of cooling air of the order of 10 to 50 ft³/min (0,28 to 1,42 m³/min) dependent upon the circuit and frequency conditions.

MECHANICAL DATA

Dimensions	As shown in outline drawings		
Mounting position	Vertical, anode upwards or downwards		
Shipping weight, approximately	40 lb	18	kg

Accessories

The following approved items are supplied separately under the codes indicated:

214-LVA-001A	Filament connector, smaller
214-LVA-001B	Filament connector, larger
214-LVA-001C	Grid connector
GC8	Glass support tube

MAXIMUM RATINGS AND TYPICAL OPERATING CONDITIONS

Class C. Industrial Heating R.F. Oscillator

MAXIMUM RATINGS

Maximum anode voltage (peak value of direct voltage plus ripple)	7	kV
Maximum direct anode current	3	A
Maximum direct anode dissipation (continuous)	6	kW
Maximum direct grid dissipation (continuous)	280	W
Maximum direct grid current (Note 2)	700	mA
Maximum negative grid bias	−1 500	V
Maximum frequency for above ratings	50	MHz

Note 2.—This figure is given for guidance. Grid dissipation is absolute rating.

TYPICAL OPERATING CONDITIONS

Direct anode voltage	6	6·5	kV
Direct grid voltage	−670	−770	V
Direct anode current	2·5	3	A
Peak r.f. grid voltage	950	1 050	V
Direct grid current (Note 3)	450 (650)	350 (500)	mA
Grid dissipation (Note 3)	140	115	W
Grid resistor	1·5	2·2	kΩ
Power input	15	19·5	kW
Output power (oscillator)	11·5	14·1	kW
Power into load at 85% transfer efficiency	10	12	kW

Note 3.—Subject to wide variation dependent upon the impedance of the load circuit. The values of current shown in brackets are typical of off-load conditions and are given for guidance only: practical figures are dependent upon compensatory devices in the grid circuit.

Class B. A.F. Power Amplifier or Modulator
(for balanced two-valve operation)

MAXIMUM RATINGS

Maximum direct anode voltage	7	kV
Maximum direct anode current	3	A
Maximum direct anode dissipation (intermittent)	7	kW
Maximum direct anode dissipation (continuous)	6	kW
Maximum direct grid dissipation (continuous)	280	W
Maximum direct grid voltage	−1·5	kV

TYPICAL OPERATING CONDITIONS

Direct anode voltage	5	kV
Direct grid voltage	−350	V
Direct anode current (zero signal), per valve	0·5	A
Direct anode current (maximum signal), per valve	1·9	A
Load resistor, anode-to-anode	2·7	kΩ
Peak a.f. grid to grid voltage	920	V
Grid drive power, approximately (2 valves)	75	W
Direct grid current, per valve	84	mA
Direct grid dissipation, per valve	7·6	W
Output power (2 valves)	12	kW

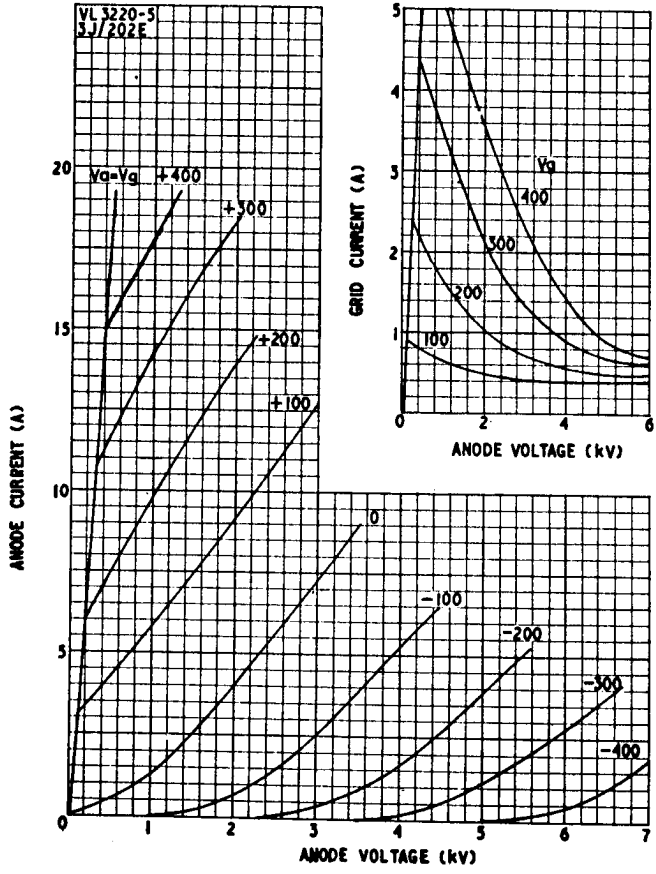
VL 3220-5
SJ/202E
Va=Vg
+400
+300
+200
+100
0
-100
-200
-300
-400
ANODE CURRENT (A)
ANODE VOLTAGE (kV)
GRID CURRENT (A)
Vg
400
300
200
100
ANODE VOLTAGE (kV)

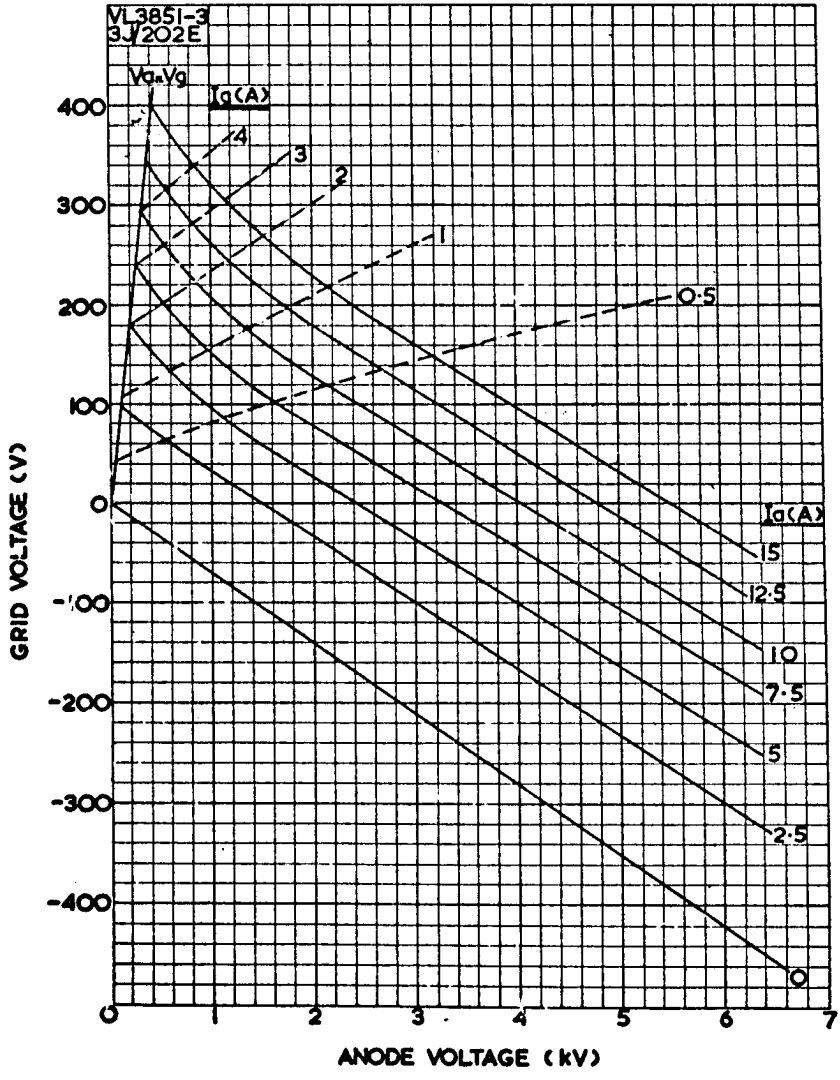
VL3851-3
3J202E
Va=Vg
Ia(A)
4
3
2
1
0·5
Ia(A)
15
12·5
10
7·5
5
2·5
0
400
300
200
100
0
-100
-200
-300
-400
GRID VOLTAGE (V)
0
1
2
3
4
5
6
7
ANODE VOLTAGE (kV)

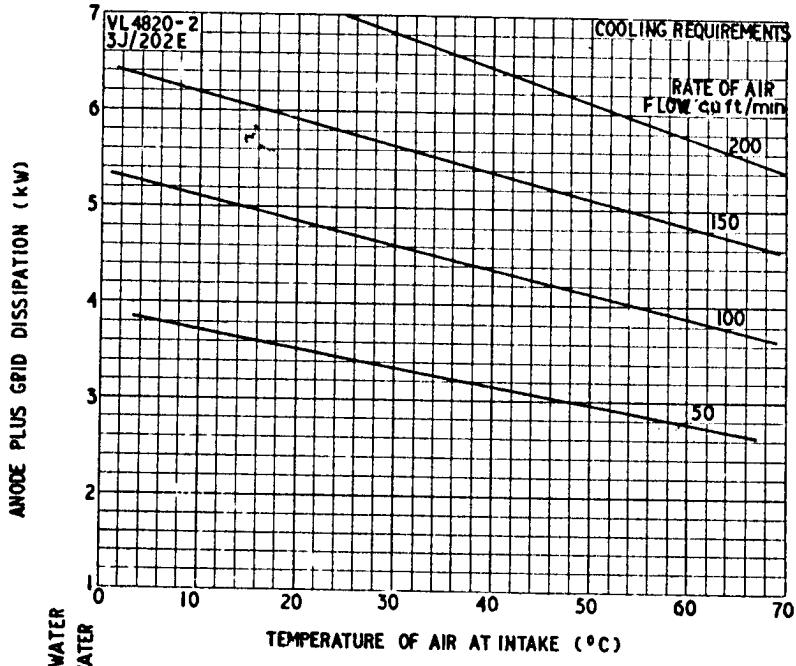
VL4820-2
3J/202E
COOLING REQUIREMENTS
RATE OF AIR FLOW cu ft/min
200
150
100
50
ANODE PLUS GRID DISSIPATION (kW)
TEMPERATURE OF AIR AT INTAKE (°C)

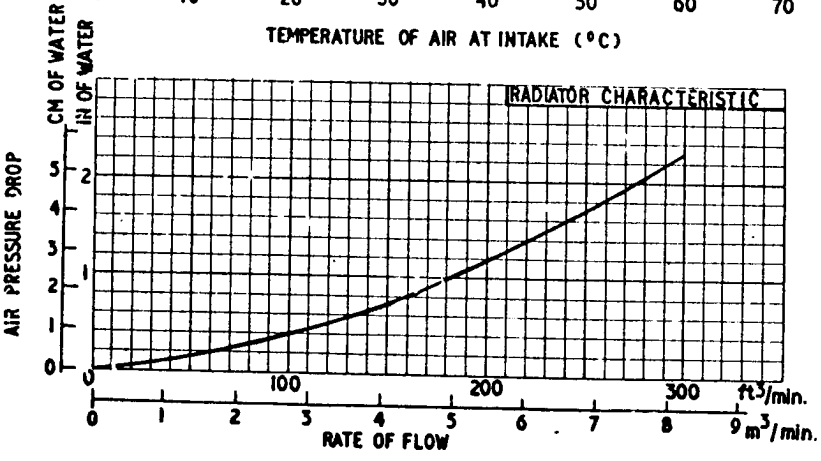
RADIATOR CHARACTERISTIC
AIR PRESSURE DROP
CM OF WATER
IN OF WATER
RATE OF FLOW
ft³/min.
m³/min.

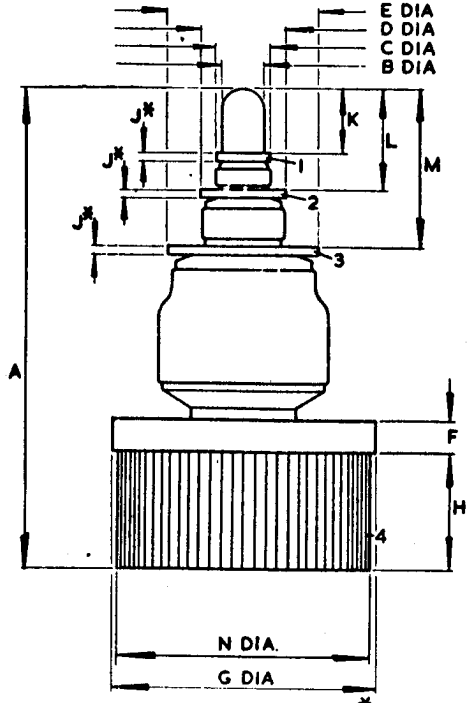

CONNEXIONS

1 FILAMENT
2 FILAMENT
3 GRID
4 ANODE

*DENOTES:- CONTACT LENGTH

DIM.	MILLIMETRES	INCHES	DIM.	MILLIMETRES	INCHES
A	282,6 MAX.	11⅛ MAX.	H	69,9 ± 1,6	2¾ ± 1/16
B	25,4 MAX.	1 MAX.	J	4,7 MIN. 6,4 MAX.	3/16 MIN. ¼ MAX.
C	31,7 ± 0,4	1¼ ± 1/64	K	38,1 ± 1,6	1½ ± 1/16
D	50,8 ± 0,4	2 ± 1/64	L	60,3 ± 4,8	2⅜ ± 3/16
E	88,9 ± 0,4	3½ ± 1/64	M	95,3 ± 4,8	3¾ ± 3/16
F	19,1 ± 1,6	¾ ± 1/16	N	147,6 ± 1,6	5 13/16 ± 1/16
G	154,0 ± 0,8	6 1/16 ± 1/32			

NOTE: BASIC FIGURES ARE INCHES

GLASS SUPPORT TUBE

Code: GC8

GC8 Outline

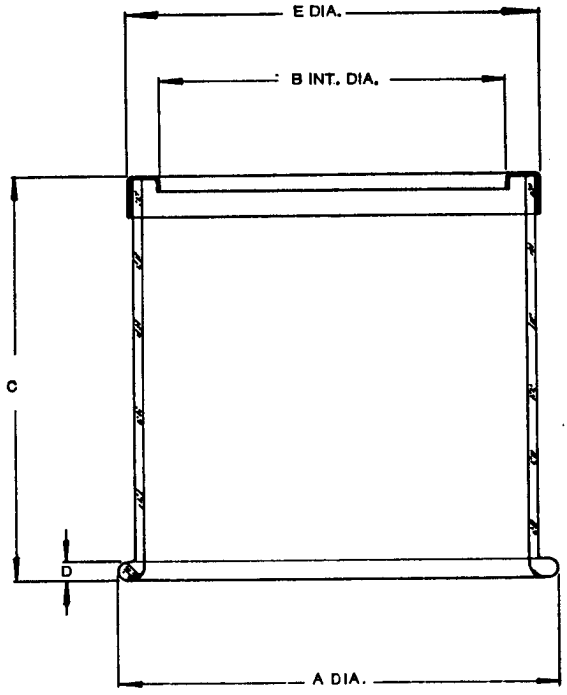

DIM.	INCHES	MILLIMETRES
A	7.1/4 MIN. 7.5/8 MAX	184,1 MIN. 193,7 MAX.
B	5.29/32 ± 1/32	150,0 ± 0,8
C	7.1/32 ± 5/32	178,6 ± 4,0
D	1/4 MIN. 3/8 MAX.	6,3 MIN. 9,5 MAX.
E	7 MAX.	177,8 MAX.

BASIC DIMS. ARE INCHES

Forced-Air-Cooled Industrial Triode

Code: 3J/222E

The 3J/222E triode has been designed specifically for industrial heating applications and is capable of operation at frequencies up to 100 Mc/s. Design features give a high mutual conductance, resulting in high efficiency with the low grid dissipation and large safety factor which are desirable when the valve is operated under variable-load conditions.

CATHODE

Thoriated-tungsten filament

Filament voltage	$8 \pm 2\%$	$8 \pm 5\%$	V
Filament current (nominal)		125	A
Maximum usable emission	36	24	A
Filament cold resistance (nominal)		0.0085	Ω

It is recommended that some resistance or reactance should be introduced into the filament supply to limit the switch or surge current to about two and a half times the normal working value. This impedance may be short circuited if desired as soon as the surge has decayed.

PIRANI TEST*

I_f	12	A
V_f range	0.12 to 0.15	V
Approx. measuring time	60	min

* See card supplied with individual valve for actual test figures.

CHARACTERISTICS

Amplification factor (at V_a 2kV, I_a 0.5A)	16	
Mutual conductance (at V_a 2kV, V_g −87V)	60	mA/V

DIRECT INTERELECTRODE CAPACITANCES

Grid to anode	50	pF
Grid to filament	80	pF
Anode to filament	3	pF

ITT Components Group Europe
Standard Telephones and Cables Limited
Valve Product Division, Brixham Road, Paignton, Devon
Telephone: Paignton 50762 (STD Code 0803). Telex: 42830

ITT
COMPONENTS

© International Telephone and Telegraph Corporation.
All rights reserved.

COOLING REQUIREMENTS

For air-cooling requirements see Figure 3.

Maximum radiator core temperature	220	°C
Maximum seal temperature	180	°C

Forced-air-cooling of grid and filament seals is required to limit their temperature to below the maximum permissible value of 180 °C

If the rate of air flow through the radiator is less than 350 ft³/min care should be taken to ensure that the maximum grid seal temperature is not exceeded especially at high operating frequencies.

MECHANICAL DATA

Dimensions	As shown in Figure 4		
Net weight, approximately	18 lb	8,2	kg
Mounting position. Vertical, anode downwards			

Accessories

The following approved items are supplied separately under the codes indicated:

214-LVA-001A	Filament connector, smaller
214-LVA-001B	Filament connector, larger
214-LVA-001C	Grid connector
GC11	Glass support tube

MAXIMUM RATINGS AND TYPICAL OPERATING CONDITIONS

Class C. Industrial Heating R.F. Oscillator

Maximum Ratings

Maximum anode voltage (peak value of direct voltage plus ripple)	7	kV
Maximum direct anode current	6	A
Maximum direct anode dissipation (continuous)	10	kW
Maximum direct grid dissipation (continuous)	500	W
Maximum direct grid current (Note 2)	1·4	A
Maximum negative grid bias	−1 500	V
Maximum frequency for above ratings	30	MHz

Note 2.—This figure is given for guidance. Grid dissipation is absolute rating.

Typical Operating Conditions

Direct anode voltage	6	kV
Direct grid voltage	−660	V
Direct anode current	5·6	A
Peak r.f. grid voltage	930	V
Direct grid current (Note 3)	750 (1 200)	mA
Grid dissipation (Note 3)	260	W
Grid resistor	900	Ω
Power input	33·6	kW
Output power (oscillator)	26	kW
Power into load at 85% transfer efficiency	21	kW

Note 3.—Subject to wide variation dependent upon the impedance of the load circuit. The value of current shown in brackets is typical of off-load conditions and is given for guidance only: a practical figure is dependent upon compensatory devices in the grid circuit.

Fig. 1.—Anode Current and Grid Current versus Anode Voltage

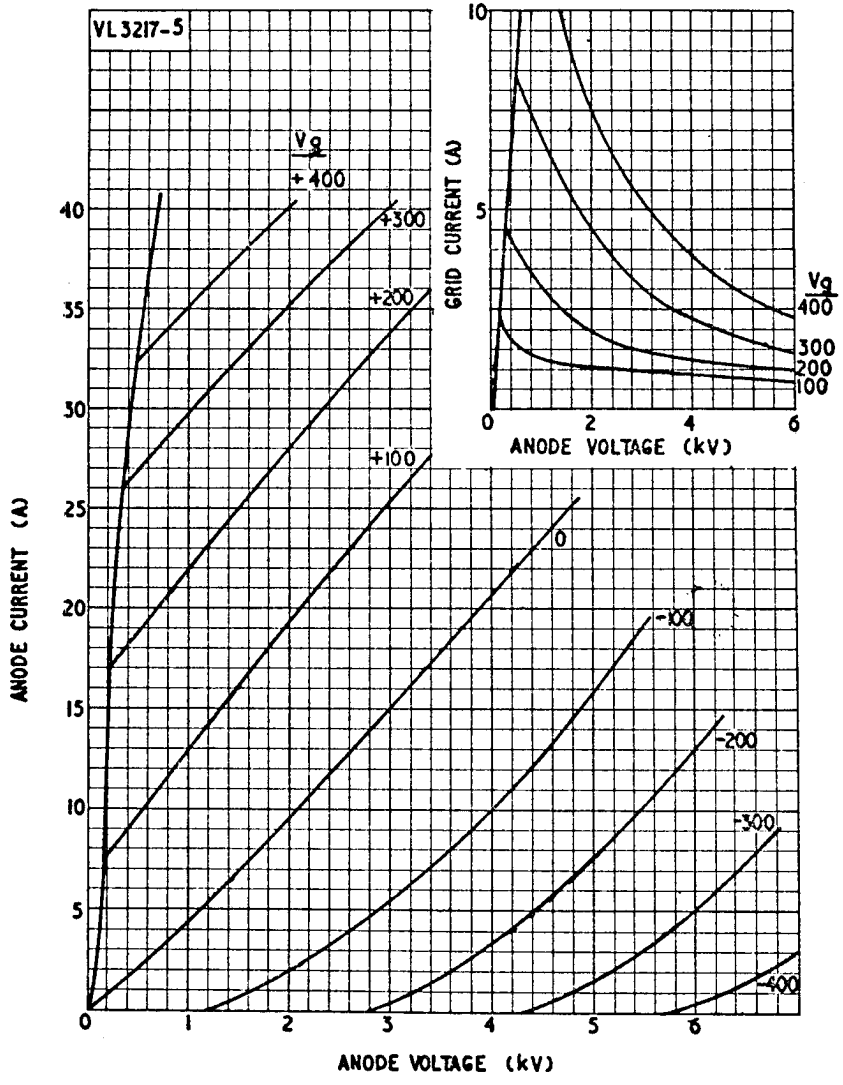

Fig. 2.—Grid Voltage versus Anode Voltage

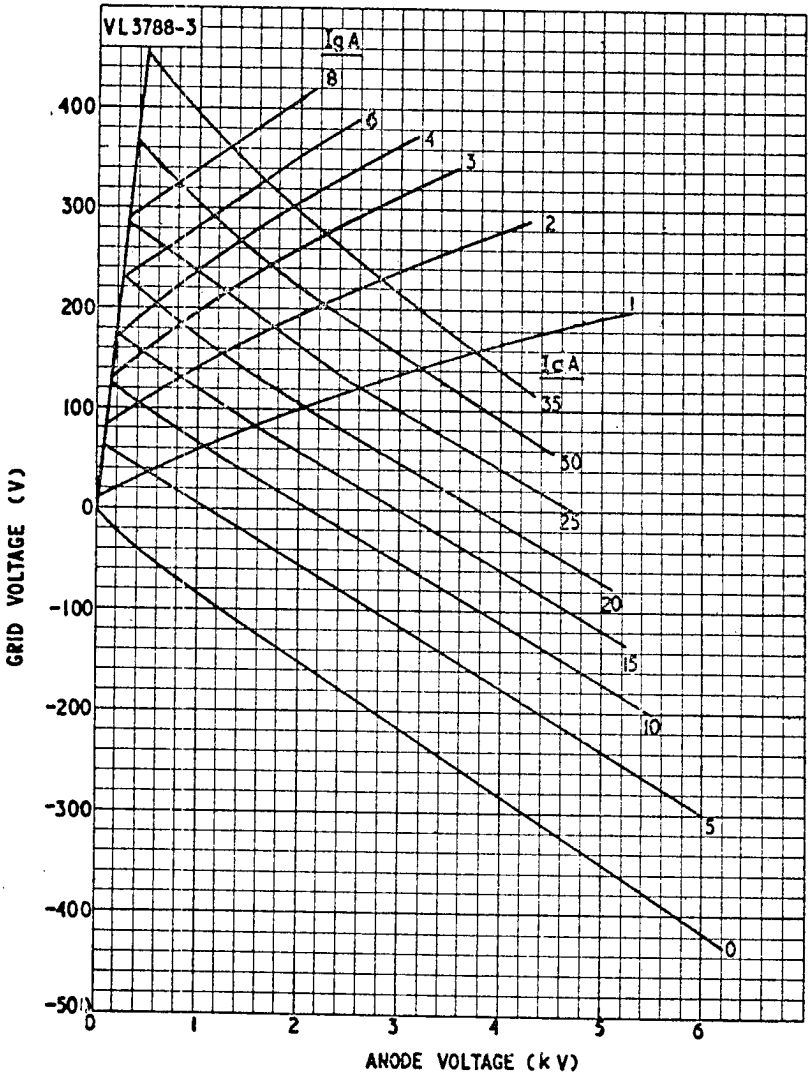

Fig. 3.—Cooling Requirements and Radiator Characteristics

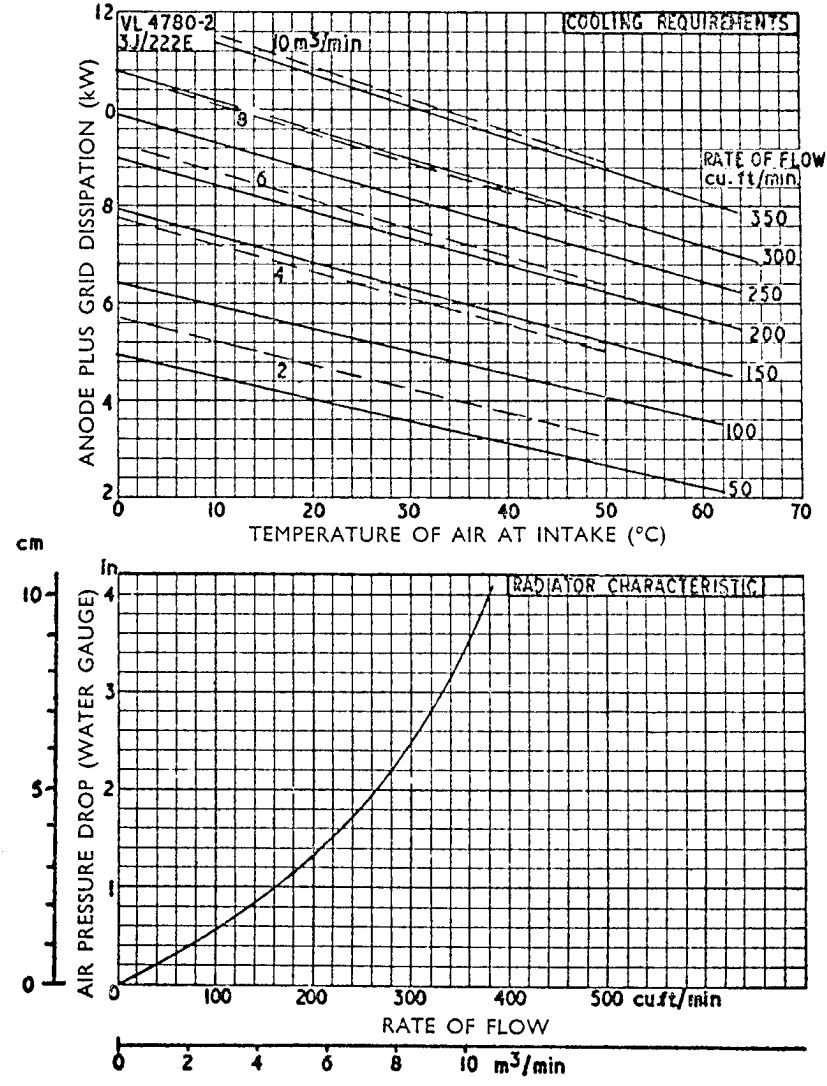

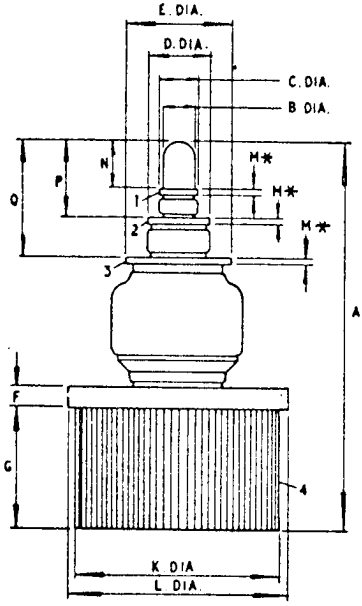

CONNEXIONS
1. FILAMENT
2. FILAMENT
3. GRID
4. ANODE

DIM.	MILLIMETRES	INCHES	DIM.	MILLIMETRES	INCHES
A	311,2 MAX.	12¼ MAX.	J		
B	25,4 MAX.	1 MAX.	K	169,9 ± 1,6	6 11/16 ± 1/16
C	31,8 ± 0,4	1¼ ± 1/64	L	182,6 ± 0,8	7 3/16 ± 1/32
D	50,8 ± 0,4	2 ± 1/64	M*	4,76 MIN. 6,35 MAX.	3/16 MIN. ¼ MAX.
E	88,9 ± 0,4	3½ ± 1/64	N	38,1 ± 1,6	1½ ± 1/16
F	19,0 ± 1,6	¾ ± 1/16	P	60,3 ± 4,8	2 3/8 ± 3/16
G	95,3 ± 1,6	3¾ ± 1/16	Q	95,3 ± 4,8	3¾ ± 3/16
H					

NOTE: BASIC FIGURES ARE IN INCHES
* DENOTES: CONTACT LENGTH

GLASS SUPPORT TUBE

Code: GC11

GC11 Outline

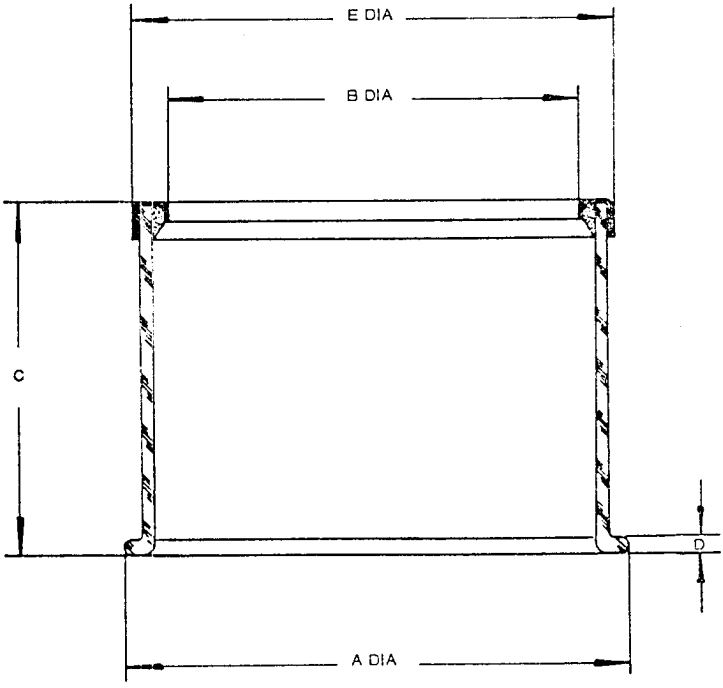

DIM	INCHES	MILLIMETRES
A	8 MIN 8.3/8 MAX	203,2 MIN 212,7 MAX
B	6.13/16 ± 1/32	173,0 ± 0,8
C	5.25/32 ± 5/32	146,8 ± 4,0
D	1/4 MIN 3/8 MAX	6,3 MIN 9,5 MAX
E	7.3/4 MAX	196,9 MAX

BASIC DIMENSIONS ARE INCHES

Power Triode

Provisional Data

Description

The 3JC/171G is a ceramic/metal, high mu, forced-air-cooled power triode intended for use in zero bias, Class B amplifier in audio or radio frequency applications.

OUTLINE

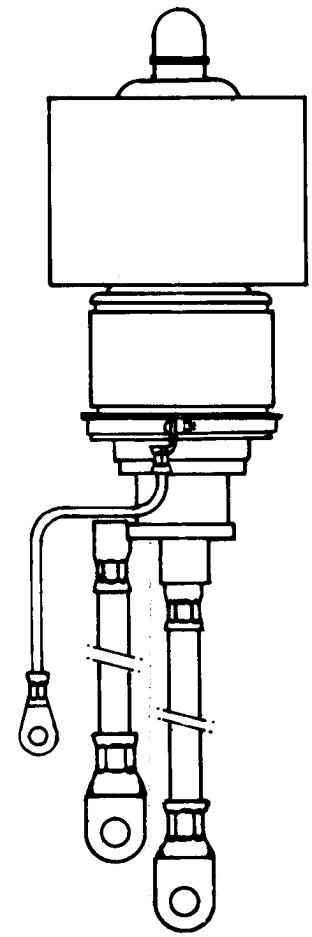

Abridged Maximum (Absolute) Ratings

V_a	(kV)	5,0
I_a	(A)	2,5
P_a	(kW)	3,0
P_g	(W)	225

Characteristics

Amplification factor, μ average		160
V_f	(V)	7,5 ± 0,375
I_f	(A)	51

Direct Interelectrode Capacitances

C_{g-f}	(pF)	38
C_{g-a}	(pF)	24
C_{a-f}, max.	(pF)	1,0

CLASS B R.F. LINEAR AMPLIFIER (GROUNDED GRID)

		Maximum Ratings	Typical Operating Conditions		
V_a	(kV)	5,0	4,0	4,8	4,8
I_a	(A)	2,5			
zero signal	(A)		0,32	0,44	0,44
1 tone	(A)		2,0	1,7	2,0
2 tone	(A)		1,3	1,1	1,3
P_a	(kW)	3,0	2,3	2,3	2,8
P_g	(W)	225			
$V_{k\ drive(pk)}$	(V)		210	182	208
P_{drive}	(W)		420	293	410
Z_{drive}	(Ω)		48	50	46
I_g 1 tone	(mA)		500	340	450
2 tone	(mA)		250	190	240
P_{out} 1 tone	(kW)		5,7	5,2	6,6
R_L	(Ω)		1 210	1 720	1 425

©1974 International Telephone and Telegraph Corporation

Components ITT

Provisional Data

CLASS B R.F. LINEAR AMPLIFIER (CARRIER CONDITIONS)

		Maximum Ratings	Typical Operating Conditions
V_a	(kV)	5,0	4,0
I_a	(A)	2,5	
zero signal	(A)		0,32
1 tone	(A)		0,74
P_a	(kW)	3,0	1,8
P_g	(W)	225	
V_g bias	(V)		0
V_g drive(pk)	(V)		85
P_{drive}	(W)		11,5
I_g 1 tone	(mA)		140
P_{out} 1 tone	(kW)		1,1
R_L	(Ω)		1 750

CLASS B A.F. POWER AMPLIFIER OR MODULATOR (SINUSOIDAL WAVE)

		Maximum Ratings	Typical Operating Conditions
			2 tubes
V_a	(kV)	5,0	4,0
I_a	(A)	2,5	
zero signal	(A)		2 x 0,32
max. signal	(A)		2 x 1,8
P_a	(kW)	3,0	2,0 per tube
P_g	(W)	225	
V_g bias	(V)		0
V_g drive (pk)	(V)		190
P_{drive} (Note 1)	(W)		115
I_g, max. signal (approx.)	(mA)		600
P_{out}	(kW)		10,5 total
R_L (plate to plate)	(Ω)		2 720

Note 1. Nominal drive power is one-half peak power.

Cooling Data

Maximum Temperatures

Radiation core	(°C)	250
Ceramic/metal seals	(°C)	250

To keep within this limit it is necessary to direct at least 3cfm into the filament stem structure between the inner and outer filament terminals. This feature may require special attention if the anode is cooled by air blown from the end remote from the base stem.

Anode-to-Base Air Flow (Note 2)				
	Sea Level		10 000 Feet	
Anode Dissipation (W)	Air Flow (cfm)	Pressure Drop S.W.G. (in.)	Air Flow (cfm)	Pressure Drop S.W.G. (in.)
1 500	33	0,6	48	0,9
2 500	66	1,25	96	1,82
3 000	72	1,40	105	2,04

Note 2. When air is supplied in the anode-to-base direction, a minimum of 3cfm must be directed into the filament-stem structure between the inner and outer filament terminals to maintain the base seals below 250°C. No separate air is required with base-to-anode airflow.

Provisional Data

Mechanical Data

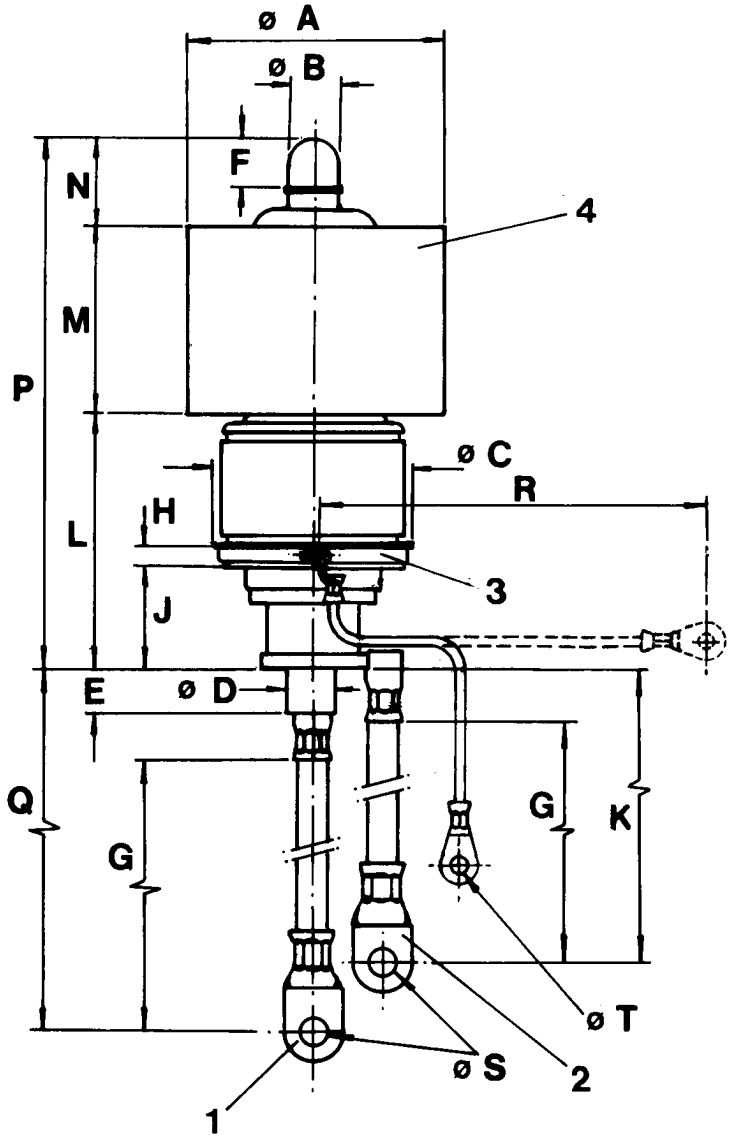

Dimensions

	mm		in.	
	min.	max.	min.	max.
A	104,0	105,6	4,094	4,156
B	19,8	21,4	0,781	0,844
C	-	92,1	-	3,625
D	21,8	22,6	0,859	0,890
E	20,6	23,8	0,812	0,937
F	17,5	22,9	0,687	0,900
G	177,8	190,5	7,000	7,500
H	9,5	11,1	0,375	0,437
J	34,9	41,3	1,375	1,625
K	201,6	214,3	7,937	8,437
L	98,4	108,0	3,875	4,250
M	74,6	77,8	2,937	3,063
N	30,1	42,8	1,187	1,687
P	203,2	228,6	8,000	9,000
Q	227,0	239,7	8,937	9,437
R	161,9	168,3	6,375	6,625

Basic dimensions are inches

S Bolt Size M10
T Bolt Size M5

Connections

1 Filament
2 Filament
3 Grid
4 Anode

Mounting position
Vertical, anode up or down
Tube weight, nett 2,84kg (6,25 lb)

Provisional Data

Typical Constant Current Characteristics

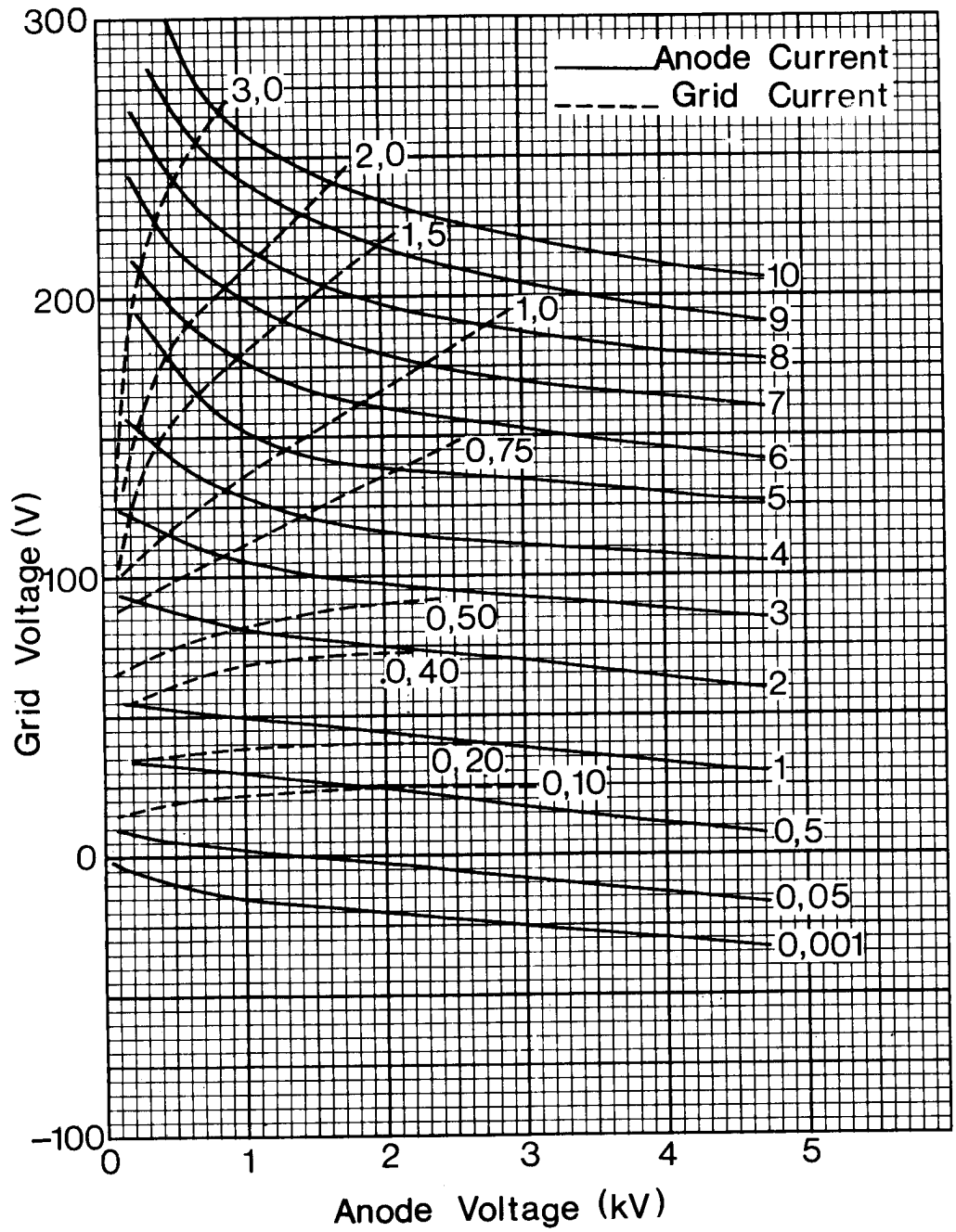

These components are available from :

ITT Components Group Europe

Standard Telephones and Cables Limited,
Valve Product Division
Brixham Road,
PAIGNTON Devon. TQ4 7BE
Tel. 0803 – 50762 Telex. 42830

SPECIAL VALVES

Water-Cooled Industrial Triode with Integral Water Jacket

Code: 3R/187E

This valve is electrically identical to 3J/187E but, for anode cooling, a helical copper tube has been fixed around the anode to obviate the need for a separate water jacket. This arrangement provides efficient cooling with economy in water consumption.

CATHODE

Thoriated tungsten filament		
Filament voltage	5	V
Filament current, nominal	78	A
Maximum usable emission	10	A

It is recommended that some resistance or reactance be introduced into the filament supply to limit the surge peak current to about two and a half times the normal r.m.s. working value. This impedance may be short-circuited if desired as soon as the surge has decayed.

CHARACTERISTICS

Amplification factor (at $V_a = 2kV$; $I_a = 0{\cdot}25A$)	12	
Mutual conductance (at $V_a = 2kV$; $V_g = -75V$)	22	mA/V

DIRECT INTERELECTRODE CAPACITANCES

Grid to anode	29	pF
Grid to filament	54	pF
Anode to filament	1·5	pF

Standard Telephones and Cables Limited
Valve Division, Brixham Road, Paignton, Devon
Telephone: Paignton 58762 Telex: 4230
London Sales Office, Telephone: 01-300 3333 Telex: 21836
C O M P O N E N T S G R O U P

STC

Code: 3R/187E

CONTINUED

COOLING REQUIREMENTS

For details of cooling requirements see Figure 3.

It is important to observe the correct connection of water inlet and outlet.

Maximum temperature of outflowing water 70 °C

Forced-air-cooling of the grid and filament seals is required to limit their temperature to below the maximum permissible value of 180°C.

An air flow of 50 ft³/min (1,42 m³/min) directed vertically downwards on to the seals is sufficient to meet these requirements.

MECHANICAL DATA

Dimensions As shown in Figure 4

Mounting position Vertical, anode downwards

Accessories

The following approved items are supplied separately under the codes indicated:

214-LVA-001A Filament connector, smaller

214-LVA-001B Filament connector, larger

214-LVA-001C Grid connector

MAXIMUM RATINGS AND TYPICAL OPERATING CONDITIONS

Class C. Industrial Heating R.F. Oscillator

Maximum Ratings

Maximum direct anode voltage (peak value of direct voltage plus ripple)	5·5	6·5	kV
Maximum direct anode current	2	2	A
Maximum direct anode dissipation (continuous)	3	3	kW
Maximum direct grid dissipation (continuous)	200	200	W
Maximum direct grid current (Note 1)	500	500	mA
Maximum negative grid bias	−1 500	−1 500	V
Maximum frequency for the above ratings	120	100	MHz

Note 1.—This figure is given for guidance. Grid dissipation is absolute rating.

Typical Operating Conditions

Direct anode voltage	5	6	6·5	kV
Direct grid voltage	−560	−650	−720	V
Direct anode current	1·6	1·5	1·8	A
Peak r.f. grid voltage	760	890	970	V
Direct grid current (Note 2)	100 (140)	130 (190)	150 (200)	mA
Grid dissipation (Note 2)	25	55	55	W
Grid resistor	5·6	5	4·8	kΩ
Power input	8	9	11·7	kW
Output power (oscillator)	5·4	6·9	8·9	kW
Power into load at 85 per cent transfer efficiency	4·6	5·8	7·5	kW

Note 2.—Subject to wide variation dependent upon the impedance of the load circuit. The values of current shown in brackets are typical of off-load conditions but are given for guidance only: practical figures are dependent upon compensatory devices in the grid circuit.

Code: 3R/187E

CONTINUED

Class B. A.F. Power Amplifier or Modulator
(for balanced two-valve operation)

MAXIMUM RATINGS

Maximum direct anode voltage	6	kV
Maximum direct anode current	2	A
Maximum direct anode dissipation (intermittent)	5	kW
Maximum direct anode dissipation (continuous)	4	kW
Maximum direct grid dissipation (continuous)	200	W
Maximum direct grid voltage	−1 500	V

TYPICAL OPERATING CONDITIONS

Direct anode voltage	5	kV
Direct grid voltage	−350	V
Direct anode current (zero signal)	0·2	A
Direct anode current (maximum signal)	1·9	A
Load resistor, anode to anode	2·7	kΩ
Peak a.f. grid to grid voltage	1 040	V
Grid drive power, approximately	85	W
Direct grid current	80	mA
Direct grid dissipation	14	W
Output power	12	kW

Code: 3R/187E

CONTINUED

Fig. 1.—Anode Current and Grid Current versus Anode Voltage

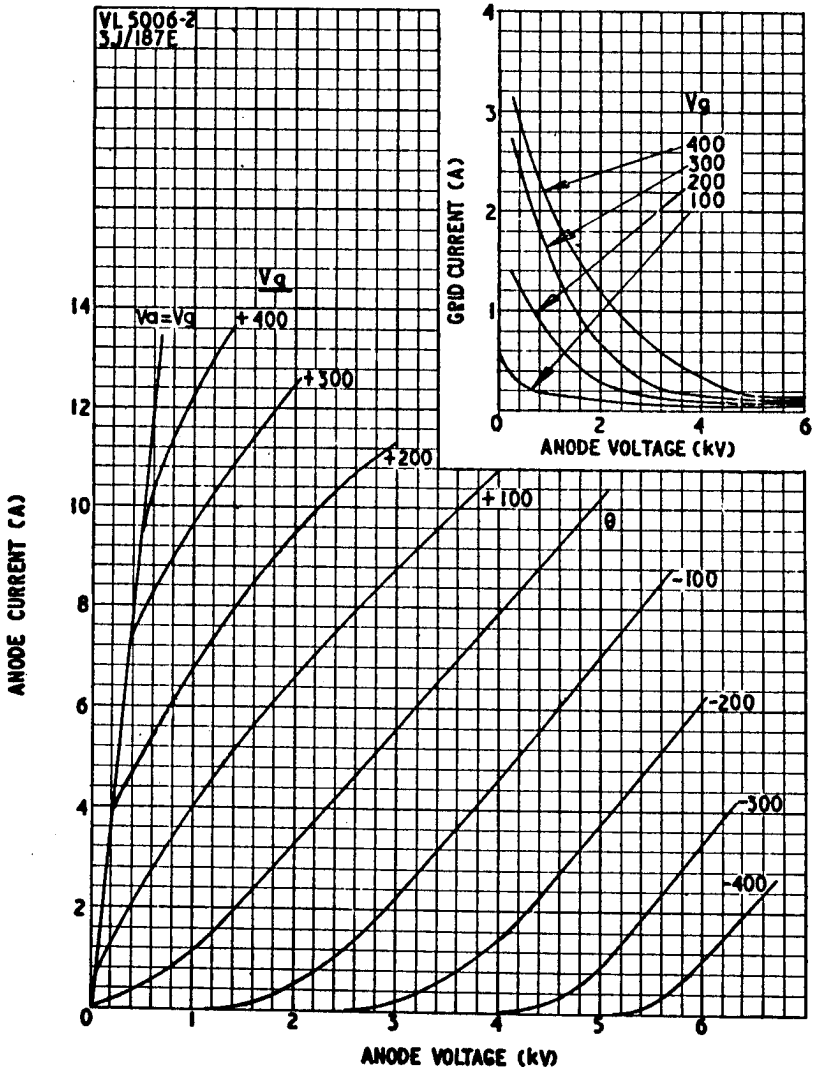

Code: 3R/187E

CONTINUED

Fig. 2.—Constant Current Characteristics

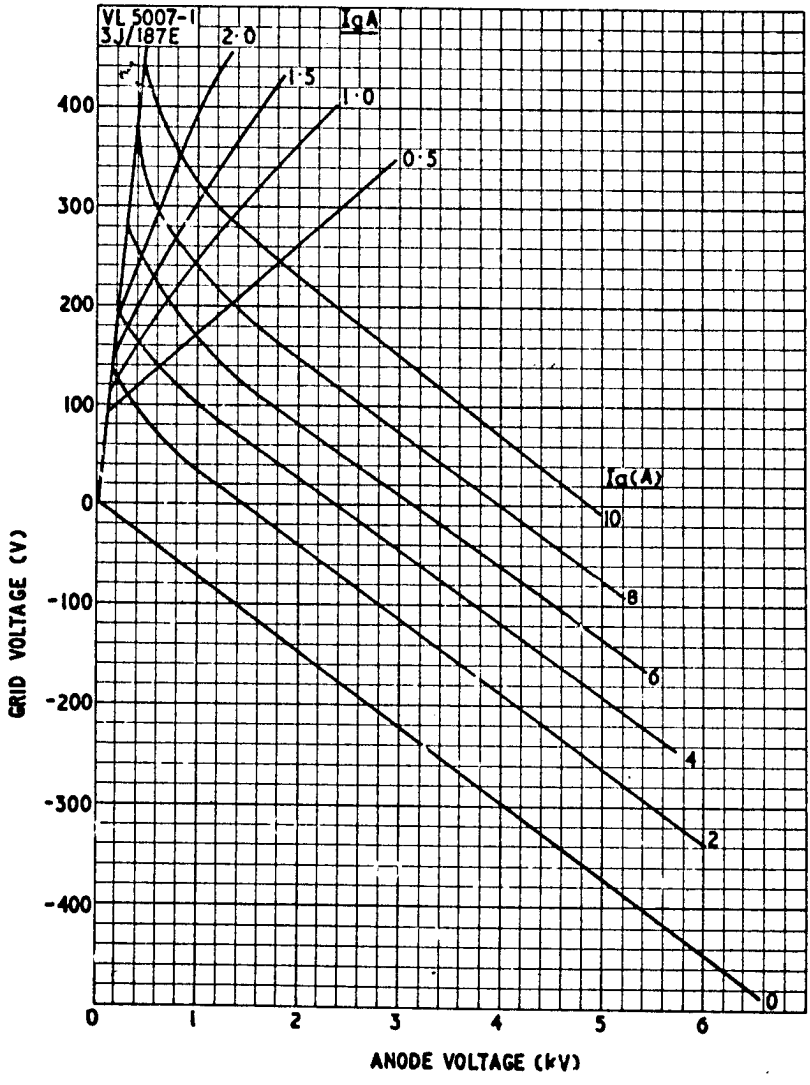

STC

Code: 3R/187E

CONTINUED

Fig. 3.—Cooling Characteristics

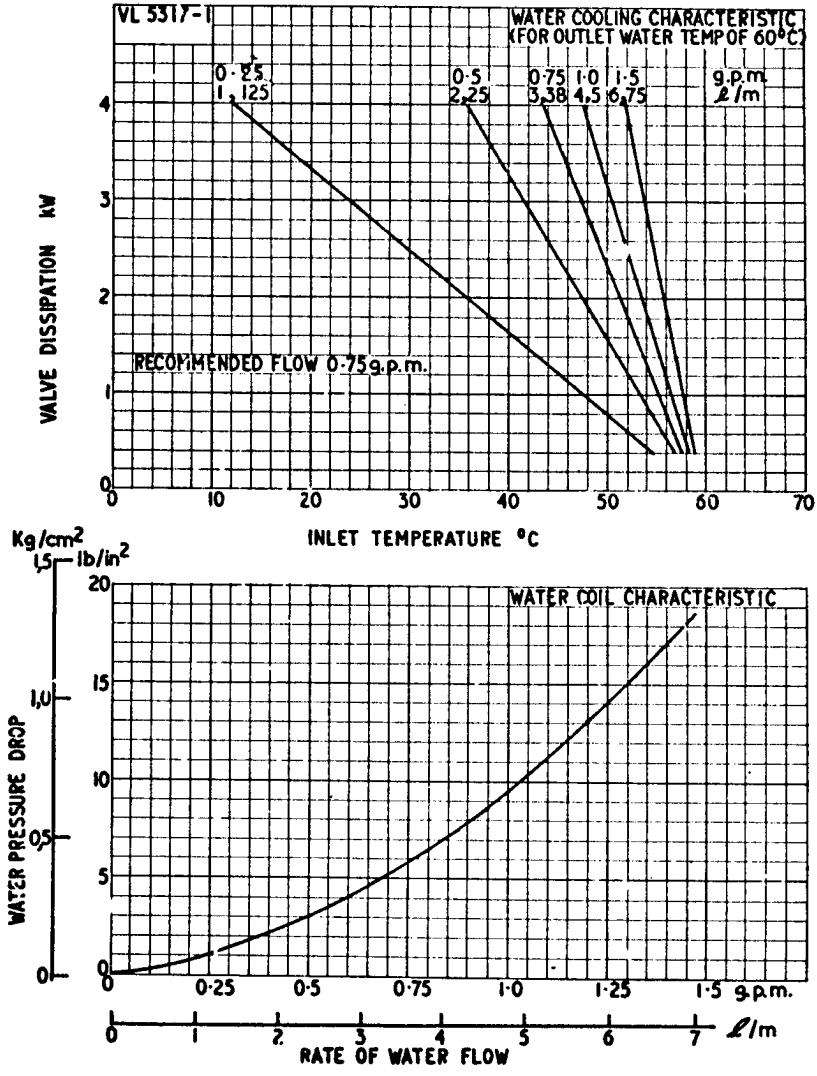

Code: 3R/187E

CONTINUED

Fig. 4.—3R/187E Outline

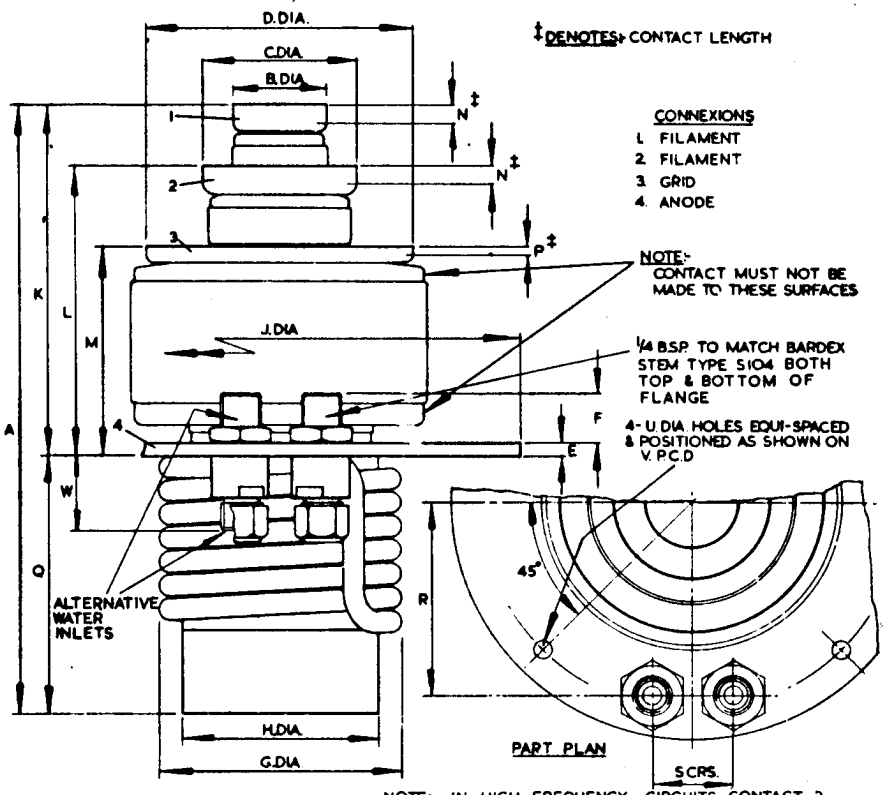

NOTE:- IN HIGH FREQUENCY CIRCUITS, CONTACT 2 SHOULD BE USED IN THE RETURN PATH FOR CATHODE CURRENT.

NOTE:- BASIC FIGURES ARE IN INCHES

DIM.	MILLIMETRES	INCHES	DIM.	MILLIMETRES	INCHES
A	227,0 MAX.	8 15/16 MAX.	L	108,7 ± 4,8	4 9/32 ± 3/16
B	31,8 ± 0,4	1 1/4 ± 1/64	M	75,4 ± 3,2	2 31/32 ± 1/8
C	50,8 ± 0,4	2 ± 1/64	N	4,7 MIN. 6,4 MAX.	3/16 MIN. 1/4 MAX
D	88,9 ± 0,4	3 1/2 ± 1/64	P	3,1 MIN. 4,8 MAX.	1/8 MIN. 3/16 MAX.
E	4,8 ± 0,4	3/16 ± 1/64	Q	86,5 ± 3,2	3 13/32 ± 1/8
F	15,9 ± 0,8	5/8 ± 1/32	R	65,1 ± 0,8	2 9/16 ± 1/32
G	82,6 MAX.	3 1/4 MAX.	S	27,0 ± 0,8	1 1/16 ± 1/32
H	65,1 MAX.	2 9/16 MAX.	U	6,53 ± 0,18	0·257 ± 0·007
J	158,8 ± 0,8	6 1/4 ± 1/32	V	139,70 ± 0,25	5·500 ± 0·010
K	131,8 ± 4,8	5 3/16 ± 3/16	W	25,4 ± 1,6	1 ± 1/16

© 1967 Standard Telephones and Cables Limited

Water-Cooled Industrial Triode with Integral Water Jacket

Code: 3R/202S (Glass-metal envelope)

This triode has been specially designed for industrial heating applications. Design features give a high mutual conductance resulting in high efficiency with a low grid dissipation and large safety factor which are desirable when the valve is operated under variable-load conditions.

CATHODE

Thoriated tungsten filament

Filament voltage	5 ± 5%	V
Filament current (nominal)	115	A
Maximum usable emission	18	A

It is recommended that some resistance or reactance be introduced into the filament supply to limit the surge peak current to about two and a half times the normal r.m.s. working value. This impedance may be short circuited if desired as soon as the surge has decayed.

For operation at high frequencies (above 30 MHz) it is recommended that the r.f. return path to the cathode should make connection to the larger filament terminal.

CHARACTERISTICS

Amplification factor (at V_a = 2kV, I_a = 0·25A)	12	
Mutual conductance (at V_a = 2kV, V_g = −75V)	32	mA/V

DIRECT INTERELECTRODE CAPACITANCES

Grid to anode	30	pF
Grid to filament	60	pF
Anode to filament	1·5	pF

COOLING REQUIREMENTS

For water cooling requirements see Figure 1.

Forced-air-cooling of grid and filament seals is required to limit their temperature to below the maximum permissible value of 180°C. An air flow of 50 ft³/min (1,42 m³/min) directed vertically downwards on to the seals is sufficient to meet these requirements.

Note.—It is important to observe the correct connection of water inlet and outlet points.

MECHANICAL DATA

Dimensions	As shown in outline drawing
Mounting position	Vertical, anode upwards or downwards.

Accessories

The following approved items are supplied separately under the codes indicated:

214–LVA–001A Filament connector, smaller
214–LVA–001B Filament connector, larger
214–LVA–001C Grid connector

ITT Components Group Europe
Standard Telephones and Cables Limited
Valve Division, Brixham Road, Paignton, Devon
Telephone: Paignton 50762 (STD Code 0803) Telex: 42830
London Sales Office, Telephone: 01-300 3333 Telex: 21836

ITT COMPONENTS
© 1969 International Telegraph and Telephone Corporation.
All rights reserved

MAXIMUM RATINGS AND TYPICAL OPERATING CONDITIONS

Class C. Industrial Heating R.F. Oscillator

Maximum Ratings

Maximum anode voltage (peak value of direct voltage plus ripple)	7	kV
Maximum direct anode current	3	A
Maximum direct anode dissipation (continuous)	6	kW
Maximum direct grid dissipation (continuous)	280	W
Maximum direct grid current (Note 1)	700	mA
Maximum negative grid bias	−1 500	V
Maximum frequency for above ratings	50	MHz

Note 1.—This figure is given for guidance. Grid dissipation is absolute rating.

Typical Operating Conditions

Direct anode voltage	6	6·5	kV
Direct grid voltage	−670	−770	V
Direct anode current	2·5	3	A
Peak r.f. grid voltage	950	1 050	V
Direct grid current (Note 2)	450 (650)	350 (500)	mA
Grid dissipation (Note 2)	140	115	W
Grid resistor	1·5	2·2	kΩ
Power input	15	19·5	kW
Output power (oscillator)	11·5	14·1	kW
Power into load at 85 per cent transfer efficiency	10	12	kW

Note 2.—Subject to wide variation dependent upon the impedance of the load circuit. The values of current shown in brackets are typical of off-load conditions and are given for guidance only: practical figures are dependent upon compensatory devices in the grid circuit.

Class B. A.F. Power Amplifier or Modulator
(for balanced two-valve operation)

Maximum Ratings

Maximum direct anode voltage	7	kV
Maximum direct anode current	3	A
Maximum direct anode dissipation (intermittent)	7	kW
Maximum direct anode dissipation (continuous)	6	kW
Maximum direct grid dissipation (continuous)	280	W
Maximum direct grid voltage	−1·5	kV

Typical Operating Conditions

Direct anode voltage	5	kV
Direct grid voltage	−350	V
Direct anode current (zero signal)	0·5	A
Direct anode current (maximum signal)	1·9	A
Load resistor, anode-to-anode	2·7	kΩ
Peak a.f. grid to grid voltage	920	V
Grid drive power, approximately	75	W
Direct grid current	84	mA
Direct grid dissipation	7·6	W
Output power	12	kW

Fig. 1

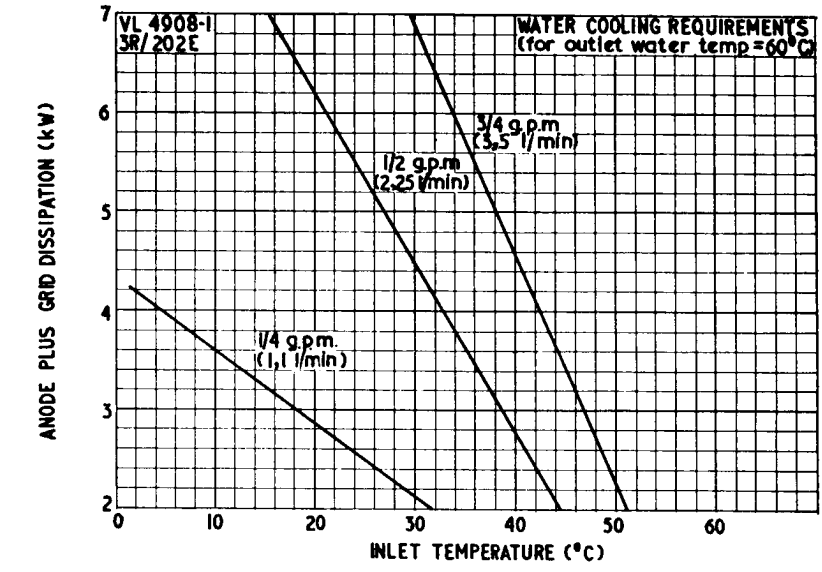
VL 4908-1
3R/202E
WATER COOLING REQUIREMENTS
(for outlet water temp=60°C)
3/4 g.p.m
(3,5 l/min)
1/2 g.p.m
(2,25 l/min)
1/4 g.p.m.
(1,1 l/min)
ANODE PLUS GRID DISSIPATION (kW)
INLET TEMPERATURE (°C)

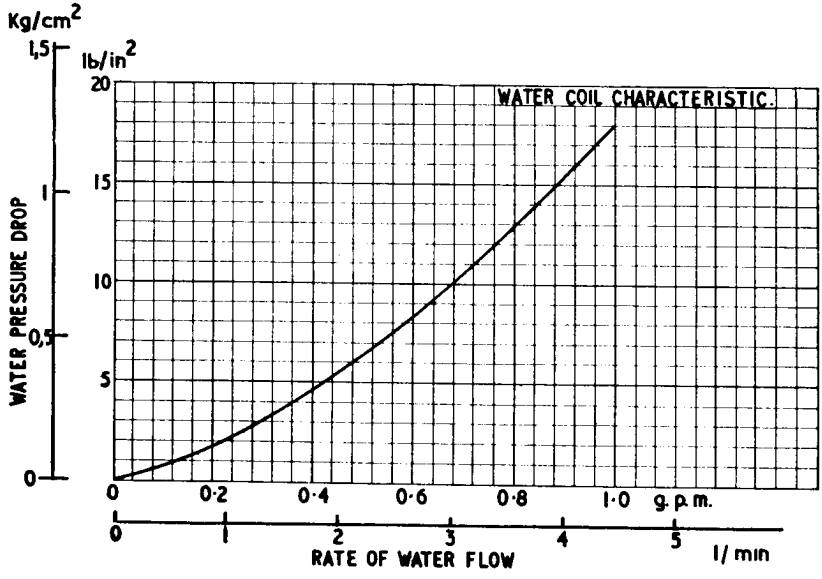
Kg/cm2
lb/in2
WATER COIL CHARACTERISTIC.
WATER PRESSURE DROP
g.p.m.
RATE OF WATER FLOW
l/min

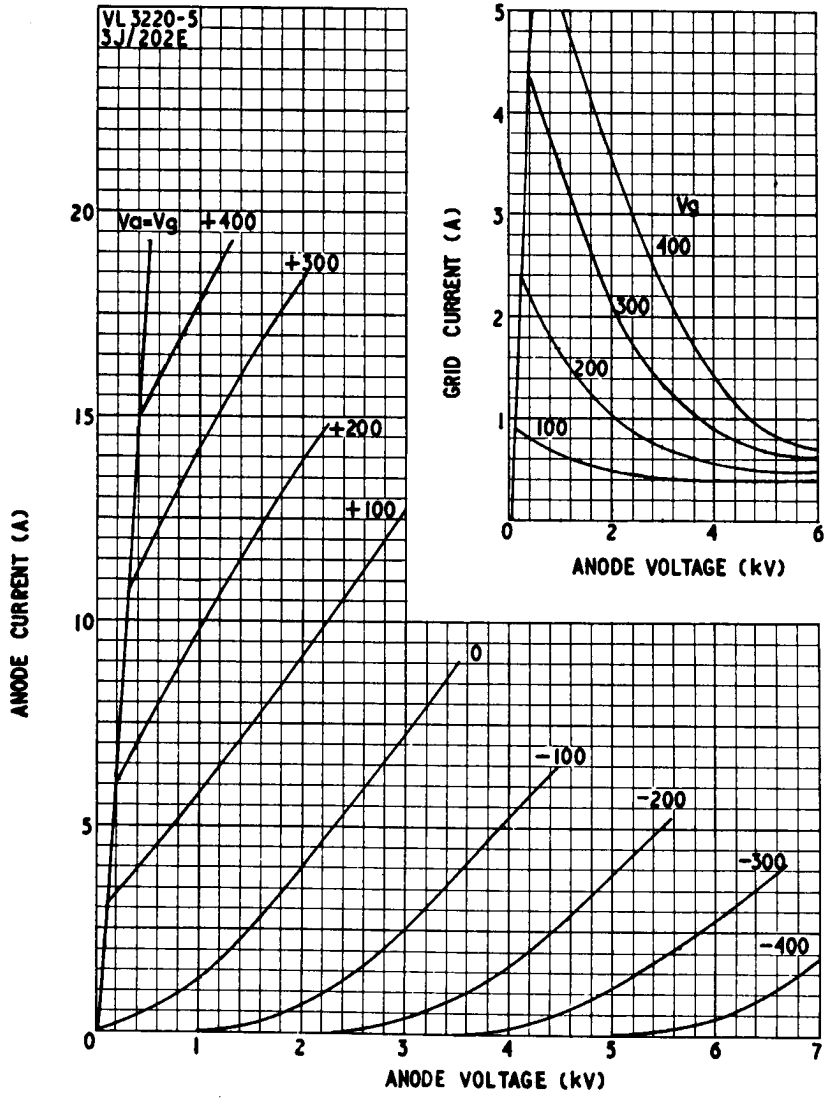
VL 3220-5
3J/202E
Va=Vg
+400
+300
+200
+100
0
-100
-200
-300
-400
ANODE CURRENT (A)
ANODE VOLTAGE (kV)
GRID CURRENT (A)
Vg
400
300
200
100
ANODE VOLTAGE (kV)

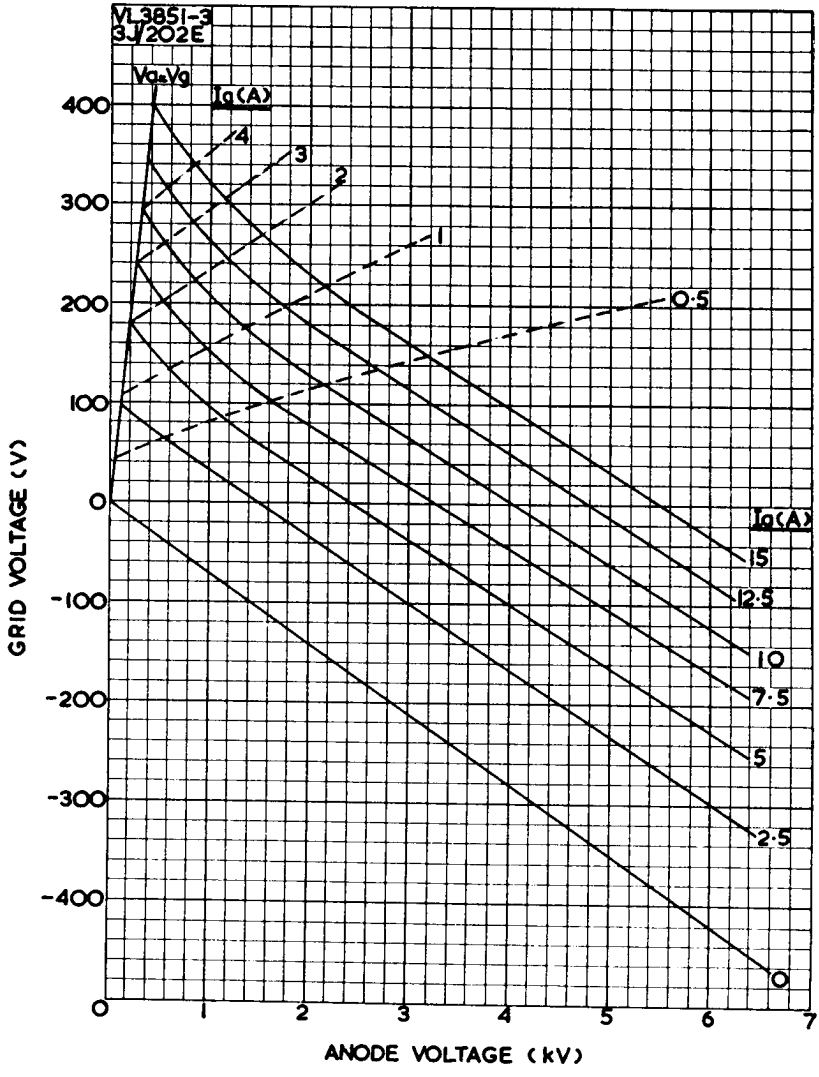
VL3851-3
3J/202E
Vg=Vg
Ig(A)
4
3
2
1
0·5
Ig(A)
15
12·5
10
7·5
5
2·5
0
400
300
200
100
0
-100
-200
-300
-400
GRID VOLTAGE (V)
0
1
2
3
4
5
6
7
ANODE VOLTAGE (kV)

3R/202S Outline

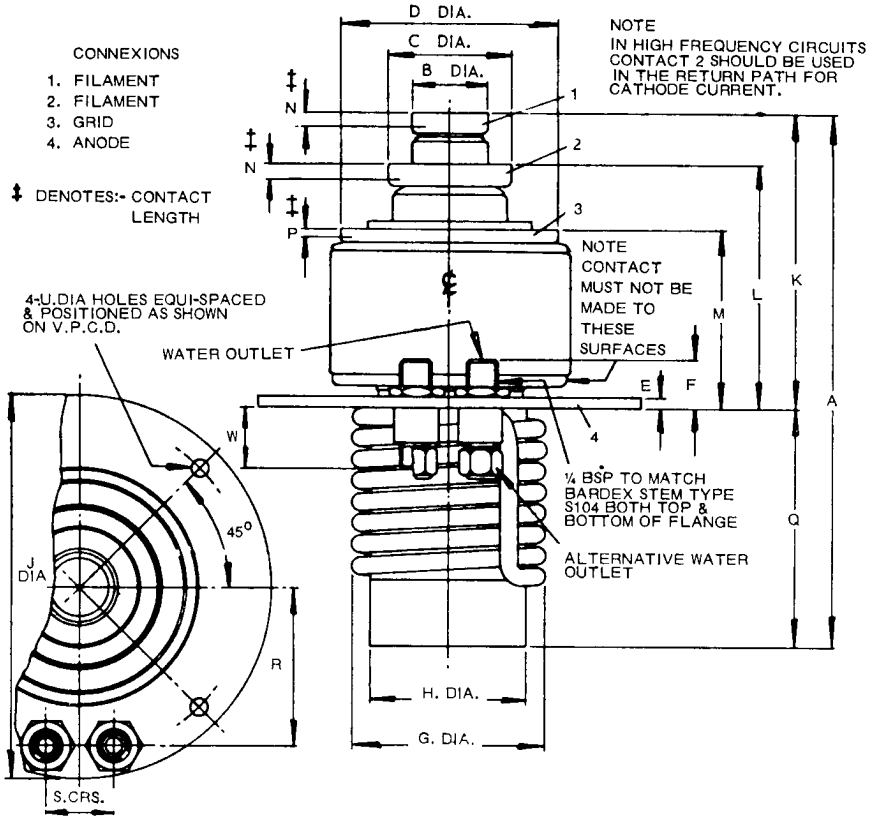

NOTE:- BASIC FIGURES ARE INCHES

DIM.	MILLIMETRES	INCHES	DIM.	MILLIMETRES	INCHES
A	242,9 MAX.	9.9/16 MAX.	L	107,2 ± 4,8	4.7/32 ± 3/16
B	31,8 ± 0,4	1.1/4 ± 1/64	M	73,8 ± 3,2	2.29/32 ± 1/8
C	50,8 ± 0,4	2 ± 1/64	N	4,7 MIN. 6,4 MAX.	3/16 MIN. 1/4 MAX.
D	88,9 ± 0,4	3.1/2 ± 1/64	P	3,1 MIN. 4,8 MAX.	1/8 MIN. 3/16 MAX.
E	4,8 ± 0,4	3/16 ± 1/64	Q	105,6 ± 2,4	4.5/32 ± 3/32
F	15,9 ± 0,8	5/8 ± 1/32	R	65,1 ± 0,8	2.9/16 ± 1/32
G	82,6 MAX.	3.1/4 MAX.	S	27,0 ± 0,8	1.1/16 ± 1/32
H	65,1 MAX.	2.9/16 MAX.	U	6,53 ± 0,18	0·257 ± 0·007
J	158,8 ± .0,8	6.1/4 ± 1/32	V	139,70 ± 0,25	5·500 ± 0·010
K	130,2 ± 4,8	5.1/8 ± 3/16	W	25,4 ± 1,6	1 ± 1/16

The 3R/222S has an integral water jacket and is intended primarily for r.f. heating applications.

MAXIMUM RATINGS

Anode voltage (peak value of direct voltage plus ripple)	7,0	kV
Direct anode current	6,0	A
Anode dissipation, continuous	10	kW
Grid dissipation, continuous	500	W
Grid current (Note 1)	1,4	A
Direct negative grid voltage	-1 500	V
Maximum frequency for above ratings	30	MHz

Note 1. This figure is given for guidance. Grid dissipation is absolute rating.

TYPICAL OPERATING CONDITIONS

Class C. Industrial Heating R.F. Oscillator

Filament voltage	8,0V ± 5%	
Filament current, nominal	125	A
Direct anode voltage	6,0	kV
Direct grid voltage	-660	V
Direct anode current	5,6	A
Peak r.f. grid voltage	930	V
Direct grid current (Note 2)	750 (1 200)	mA
Anode dissipation	7,6	kW
Grid dissipation (Note 2)	260	W
Grid resistor	900	Ω
Power output	26	kW
Power output, less drive	25	kW
Power into load at 85% transfer efficiency	21	kW

Note 2. Subject to wide variation dependent upon the impedance of the load circuit. The value of current shown in brackets is typical of off-load conditions and is given for guidance only: a practical figure is dependent upon compensatory devices in the grid circuit.

ITT Components Group Europe
Standard Telephones and Cables Limited
Valve Product Division, Brixham Road, Paignton, Devon
Telephone: Paignton 50762 (STD Code 0803) Telex: 42830

ITT COMPONENTS

© International Telephone and Telegraph Corporation. All rights reserved.

CATHODE

Thoriated tungsten filament		
Maximum usable emission	36	A
Cold filament resistance	0,0045	Ω

It is recommended that some resistance or reactance be introduced into the filament supply to limit the surge current to about two and a half times the normal r.m.s. working value. This impedance may be short-circuited as soon as the surge has decayed.

For tube operation at frequencies above 30MHz, it is recommended that the r.f. path to the cathode makes connection to the large filament terminal.

CHARACTERISTICS

Amplification factor (at V_a = 2kV : I_a = 0,5A)	12	
Mutual conductance (at V_a = 2kV : V_g = -87V)	60	mA/V

DIRECT INTERELECTRODE CAPACITANCES

Grid to anode	56	pF
Grid to filament	100	pF
Anode to filament	3,0	pF

COOLING

The anode must be cooled by an adequate water flow (see Figures 3 and 4). It is essential that the water enters the water jacket at its lowest point in relation to the attitude of the tube when mounted. Forced-air cooling of the grid and filament seals is required to limit their temperature to below the maximum permissible value of 180°C. An air flow of 50 ft^3/min (1,42 m^3/min) directed vertically downwards on to the seals from a 4 inch (10 cm) diameter orifice is sufficient for operation at frequencies up to 30MHz. At higher frequencies, additional cooling of the grid seal may be required.

MECHANICAL DATA

Dimensions	As shown in outline drawing included
Mounting position	Vertical, anode upwards or downwards
Weight of tube	7,5 lb (3,4 kg)
Accessories	Filament and grid connectors, which are supplied as separate items, are available under following codes: CN-1A Filament connector, small CN-1B Filament connector, large CN-1C Grid connector

Fig. 1. Constant Voltage Characteristic

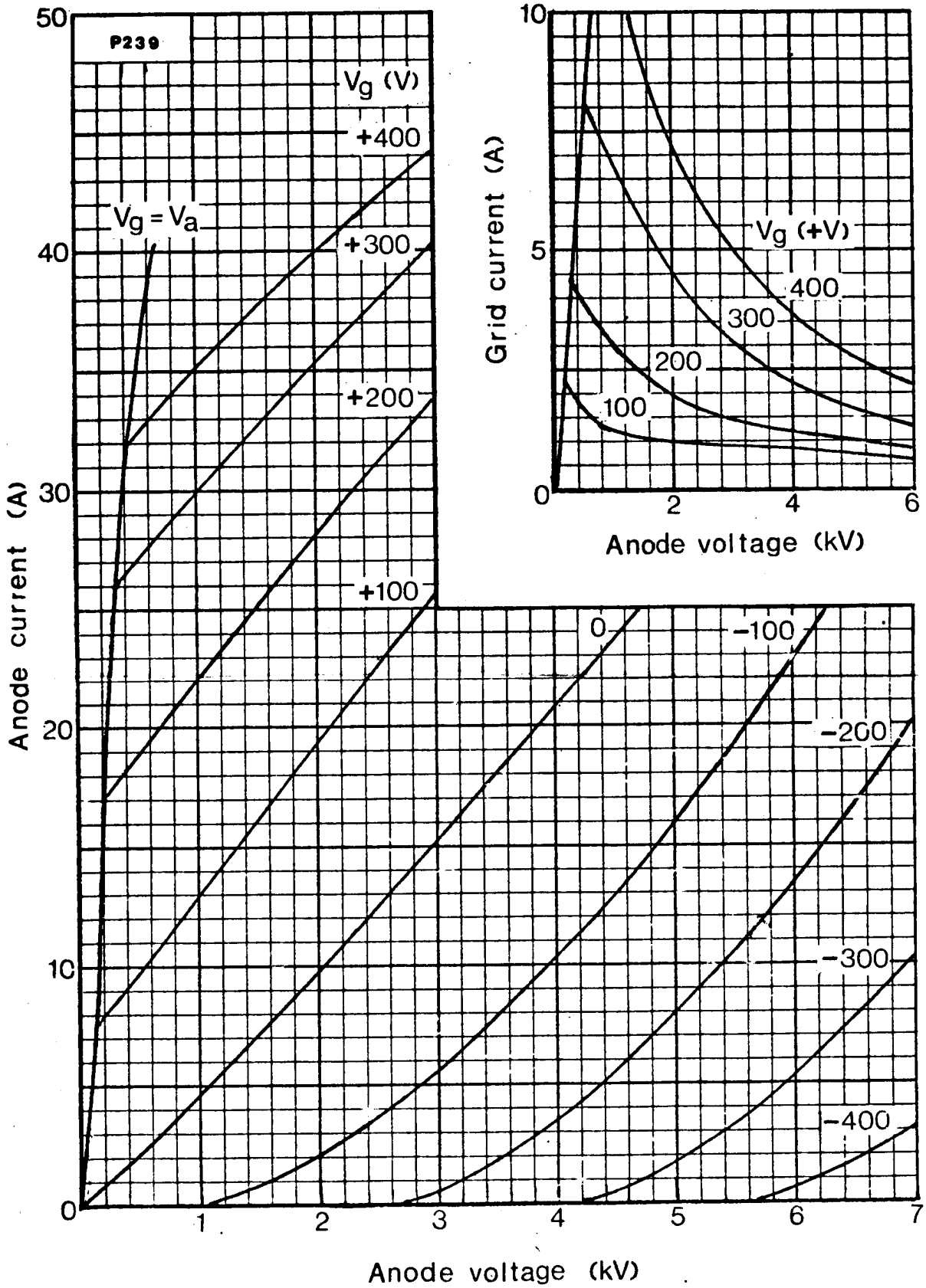

Fig. 2. Constant Current Characteristic

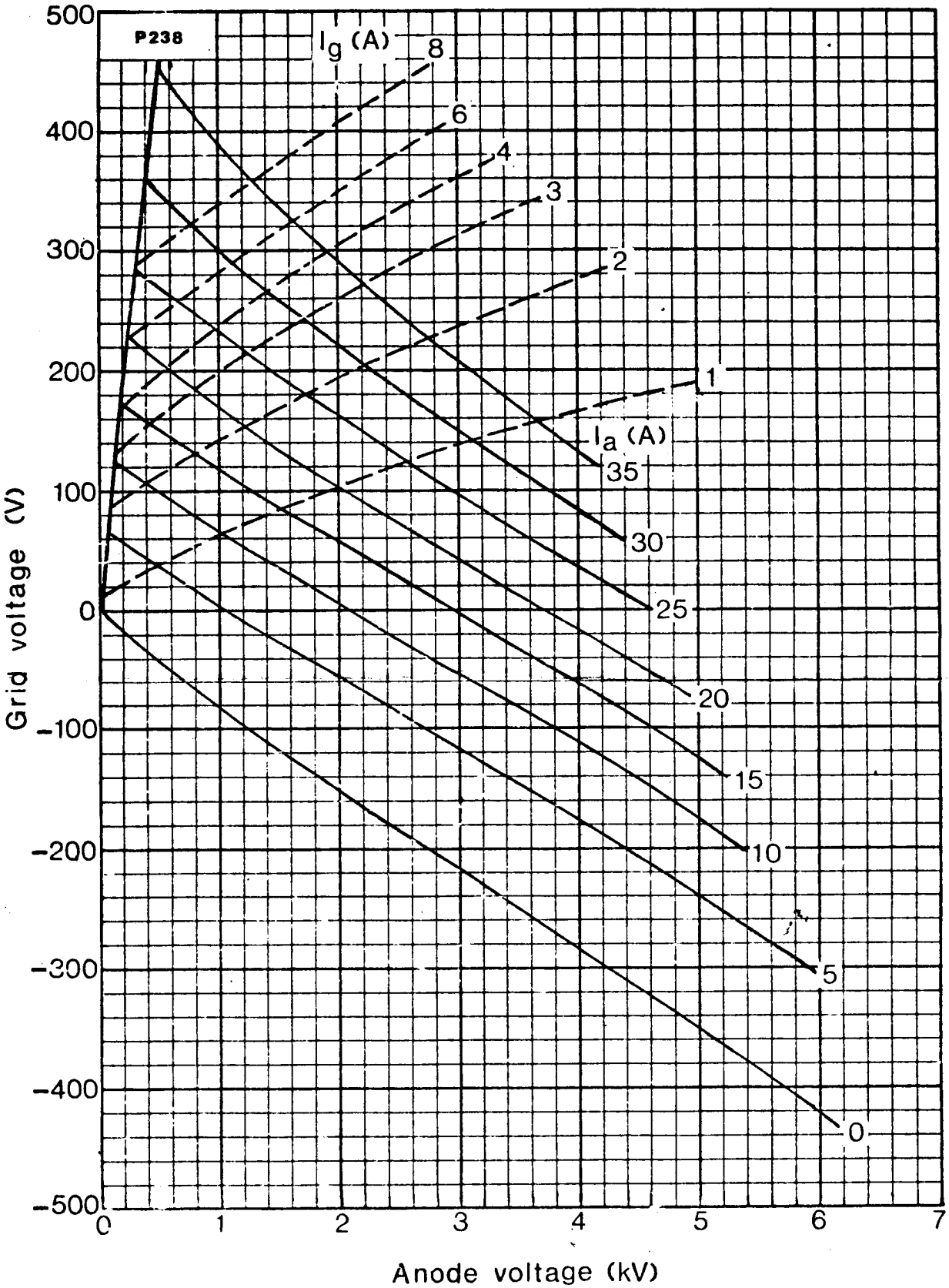

Fig. 3. Cooling Water Requirement for Outlet Water Temperature of 60°C

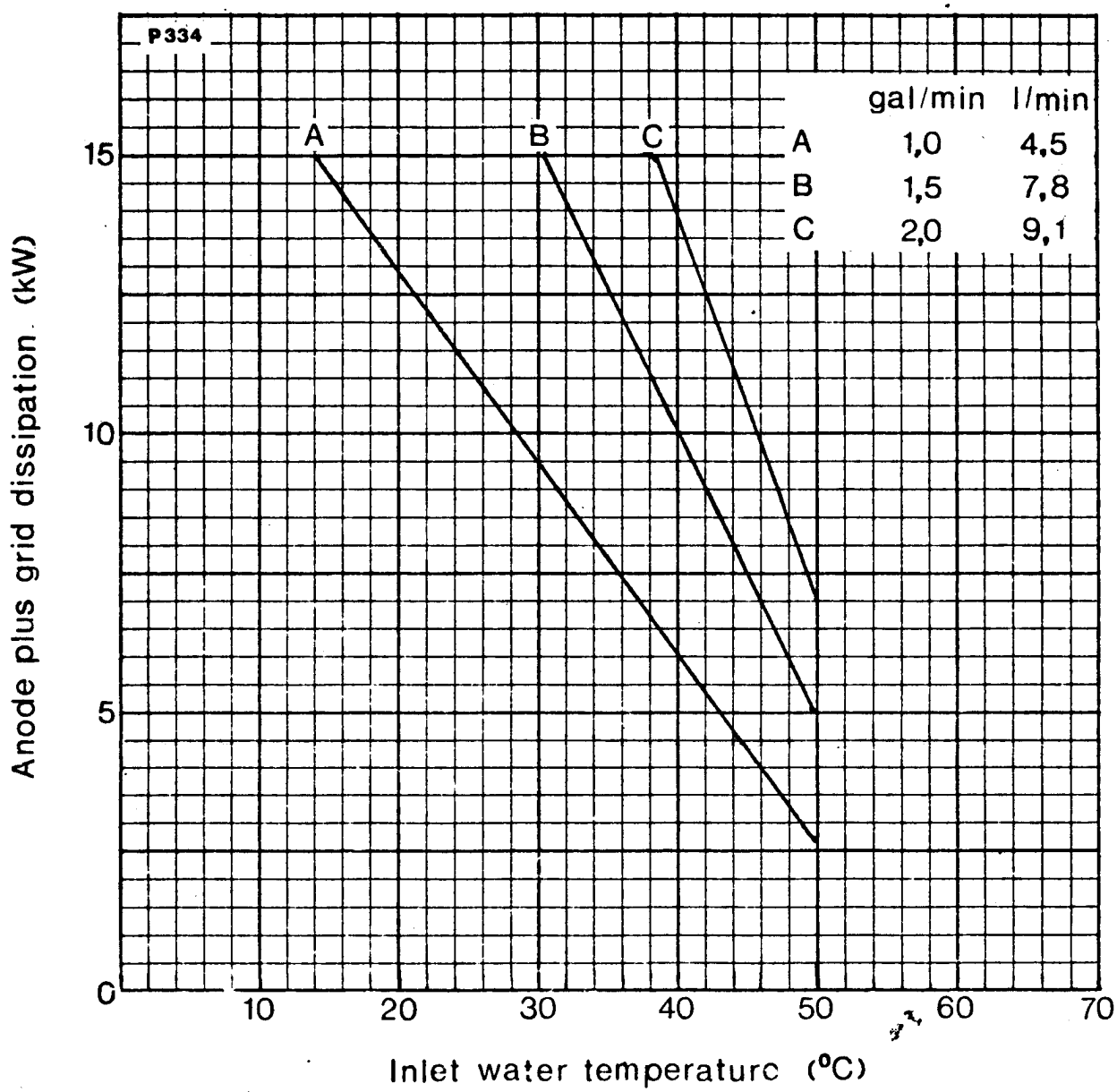

Fig. 4. Water Coil Characteristic

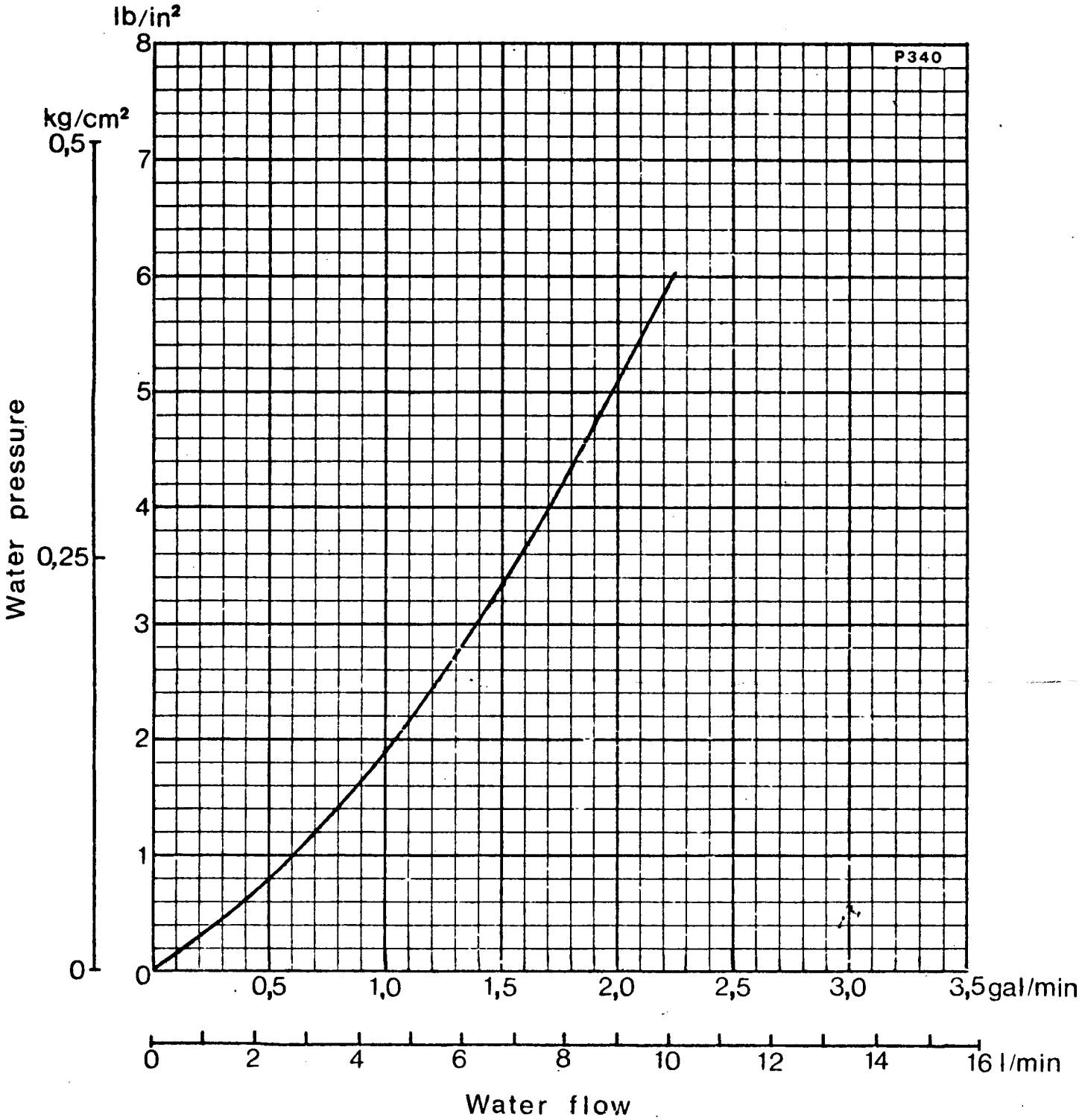

Fig. 5. 3R/222S Outline

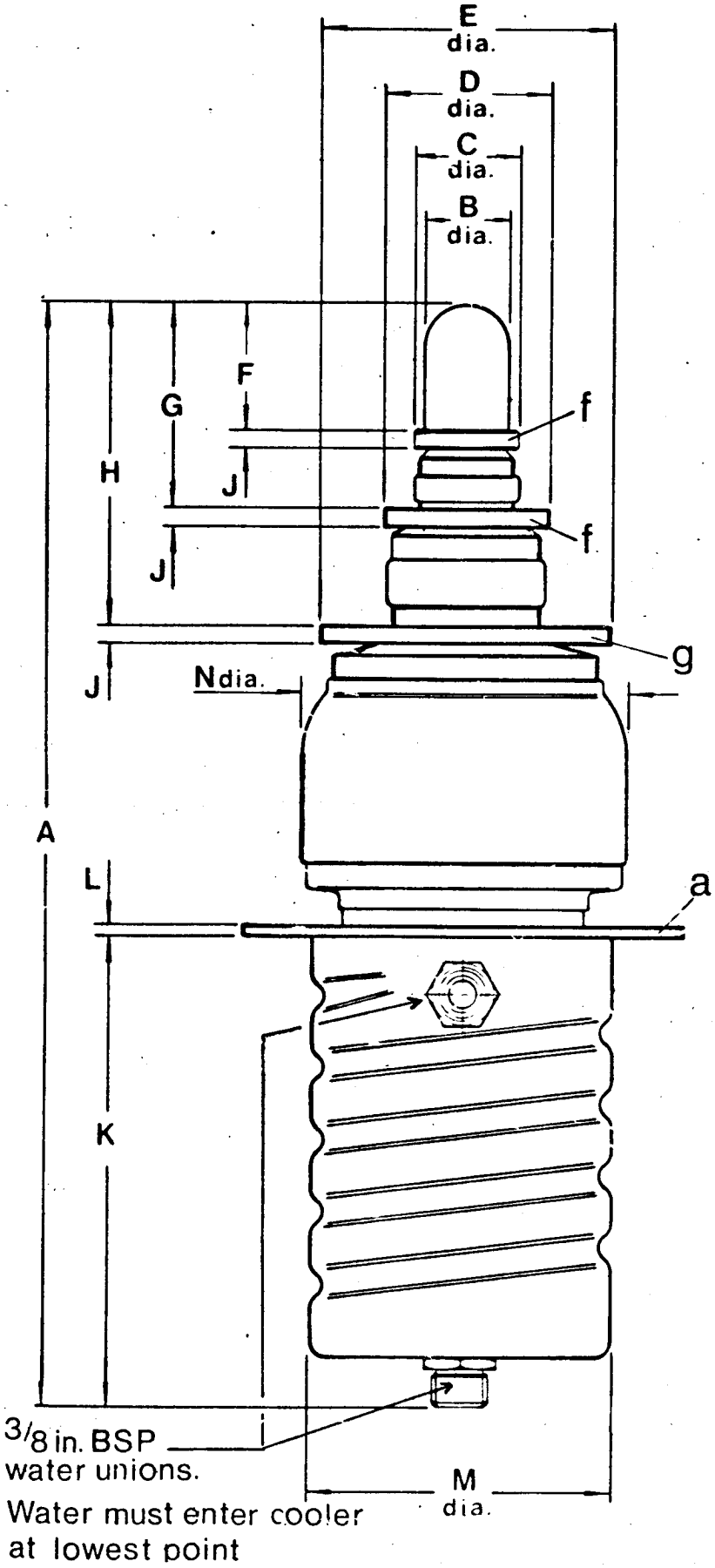

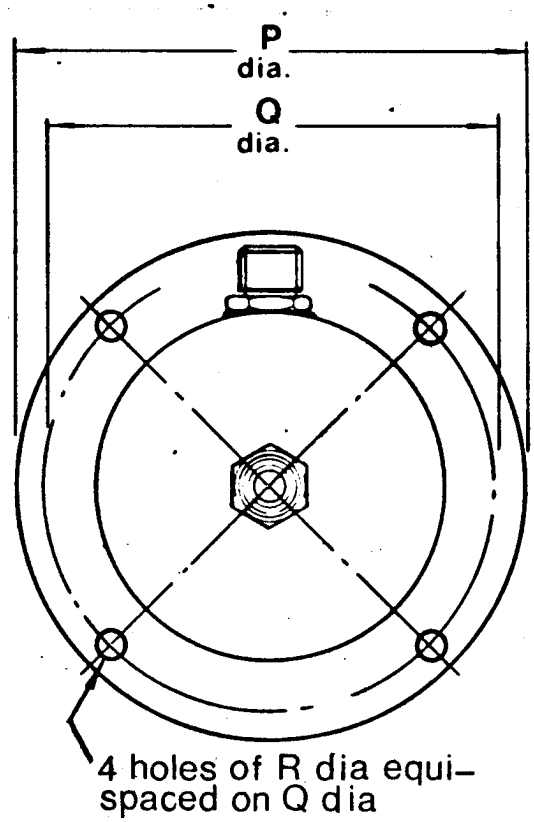

DIM.	MILLIMETRES.	INCHES.
A	343,00 max.	13,500 max.
B	25,4 max.	1,000 max.
C	31,7 ±0,4	1,250 ±,015
D	50,8 ±0,4	2,000 ±,015
E	88,9 ±0,4	3,500 ±,015
F	38,1 ± 1,6	1,500 ±,062
G	60,3 ±4,8	2,375 ±,187
H	95,3 ±4,8	3,750 ±,187
J	6,4 max.	0,250 max.
K	146,05 max.	5,750 max.
L	3,2 ±0,13	0,125 ±,005
M	93,65 max.	3,687 max.
N	101,6 max.	4,000 max.
P	133,3 ±0,8	5,250 ±,031
Q	119,05±0,13	4,687 ±,005
R	6,75±0,13	0,266 ±,005

metric dimensions are derived from original inch dimensions

SPECIAL VALVES

Water-Cooled Industrial Triode with Integral Water Jacket

Code: 3R/252E

The 3R/252E has been designed specifically for industrial heating applications and is capable of operation at frequencies up to 100 Mc/s. Design features give a high mutual conductance, resulting in high efficiency with the low grid dissipation and large safety factor which are desirable when the valve is operated under variable-load conditions.

This valve has identical electrical characteristics to those of the type 3Q/252E water-cooled valve which is used with a separate water jacket.

CATHODE

Thoriated tungsten filament

Filament voltage	8 ± 2%	8 ± 5%	V
*Filament current, nominal		125	A
Maximum usable emission	36	24	A

*It is recommended that some resistance or reactance be introduced into the filament supply to limit the surge peak current to about two and a half times the normal r.m.s. working value. This impedance may be short-circuited as soon as the surge has decayed.

PIRANI TEST†

Filament current	12	A
Filament voltage range	0·13 to 0·14	V
Measuring time, approx.	60	min

†See card supplied with individual valve for actual test figures.

CHARACTERISTICS

Amplification factor (at V_a = 4kV, I_a = 1A)	24	
Mutual conductance (at V_a = 4kV, V_g = −75V)	60	mA/V

DIRECT INTERELECTRODE CAPACITANCES

Grid to anode	30	pF
Grid to filament	80	pF
Anode to filament	1·8	pF

Standard Telephones and Cables Limited
Valve Division, Brixham Road, Paignton, Devon
Telephone: Paignton 58685 Telex: 4230
London Sales Office, Telephone: Footscray 3333 Telex: 21836
COMPONENTS GROUP

STC

Code: 3R/252E

CONTINUED

COOLING REQUIREMENTS

It is important to observe the correct connection of water inlet and outlet.

Water flow required for full anode dissipation	3 gal/min	13	l/min
Water pressure	13 lb/in²	0,8	kg/cm²
Maximum temperature of outflowing water		70	°C

Forced-air-cooling of the grid and filament seals is required to limit their temperature to below the maximum permissible value of 180°C.

An air-flow of 50 ft³/min (1,42 m³/min) directed vertically downwards on to the seals is sufficient to meet these requirements.

MECHANICAL DATA

Dimensions	As shown in outline drawing
Mounting position	Vertical, anode downwards

MAXIMUM RATINGS AND TYPICAL OPERATING CONDITIONS

RADIO FREQUENCY

Class C. Industrial Heating Oscillator

Maximum Ratings

Maximum anode voltage (peak value of direct voltage plus ripple)	13	kV
Maximum direct anode current	6	A
Maximum direct anode dissipation (continuous)	24	kW
Maximum direct grid dissipation (continuous)	500	W
Maximum frequency for above ratings	50	Mc/s
Maximum negative grid bias	1 500	V

Typical Operating Conditions

Direct anode voltage	12	kV
Direct grid voltage	680	V
Direct anode current	5	A
Peak r.f. grid voltage	990	V
*Direct grid current	800	mA
*Grid dissipation	275	W
Power output	48	kW
Efficiency	80	%

*Subject to wide variation dependent upon the impedance of the load circuit.

Code: 3R/252E

CONTINUED

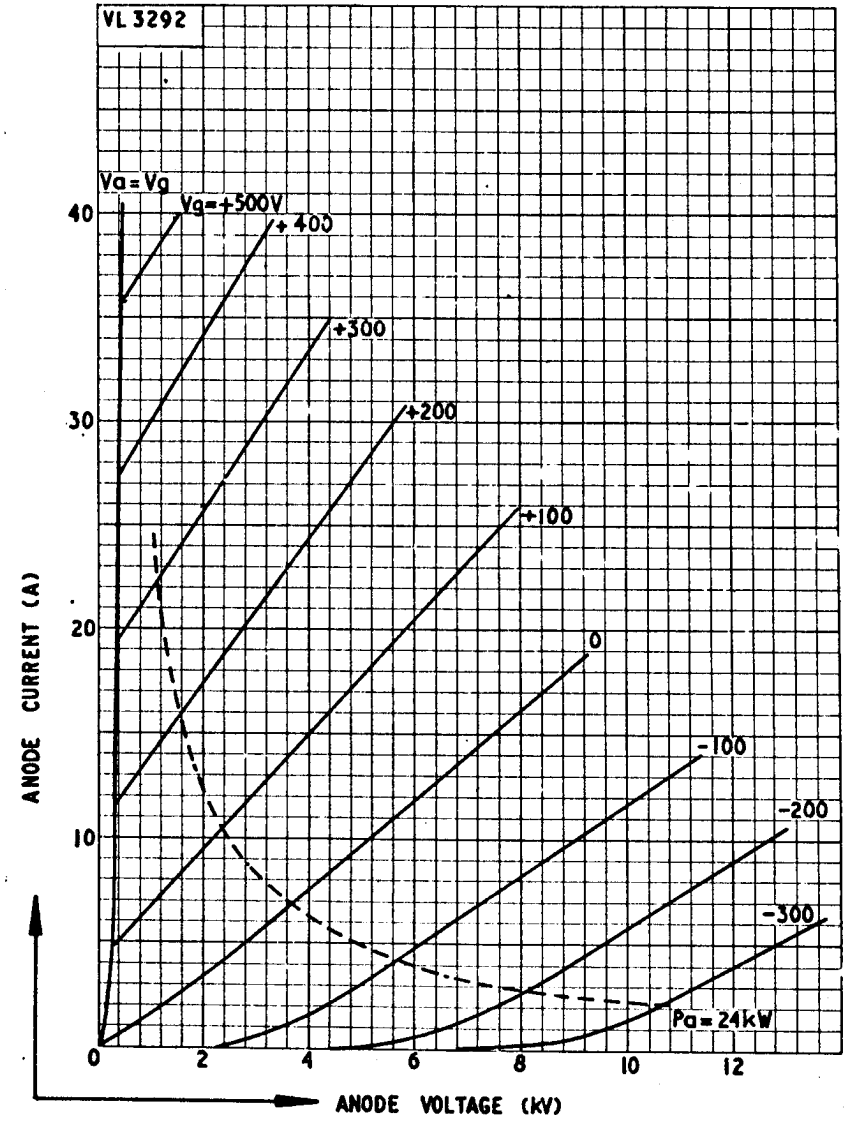

STC

Code: 3R/252E

CONTINUED

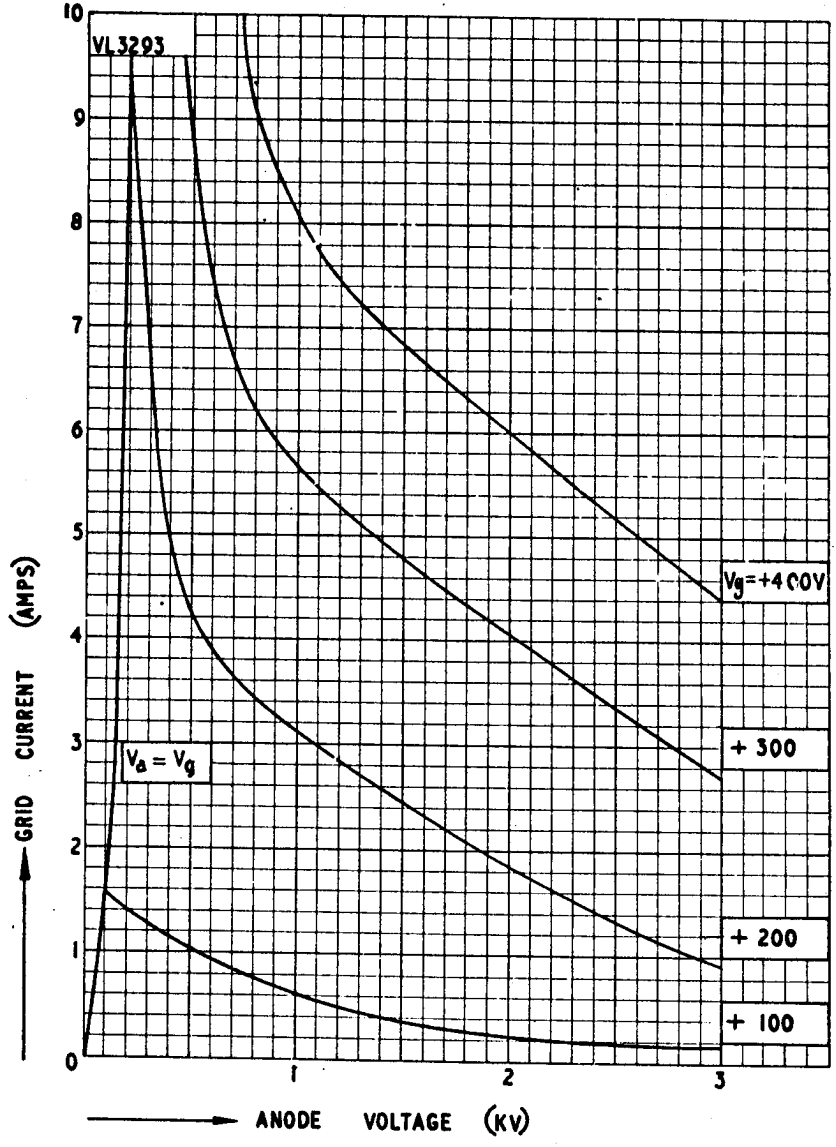

Code: 3R/252E

CONTINUED

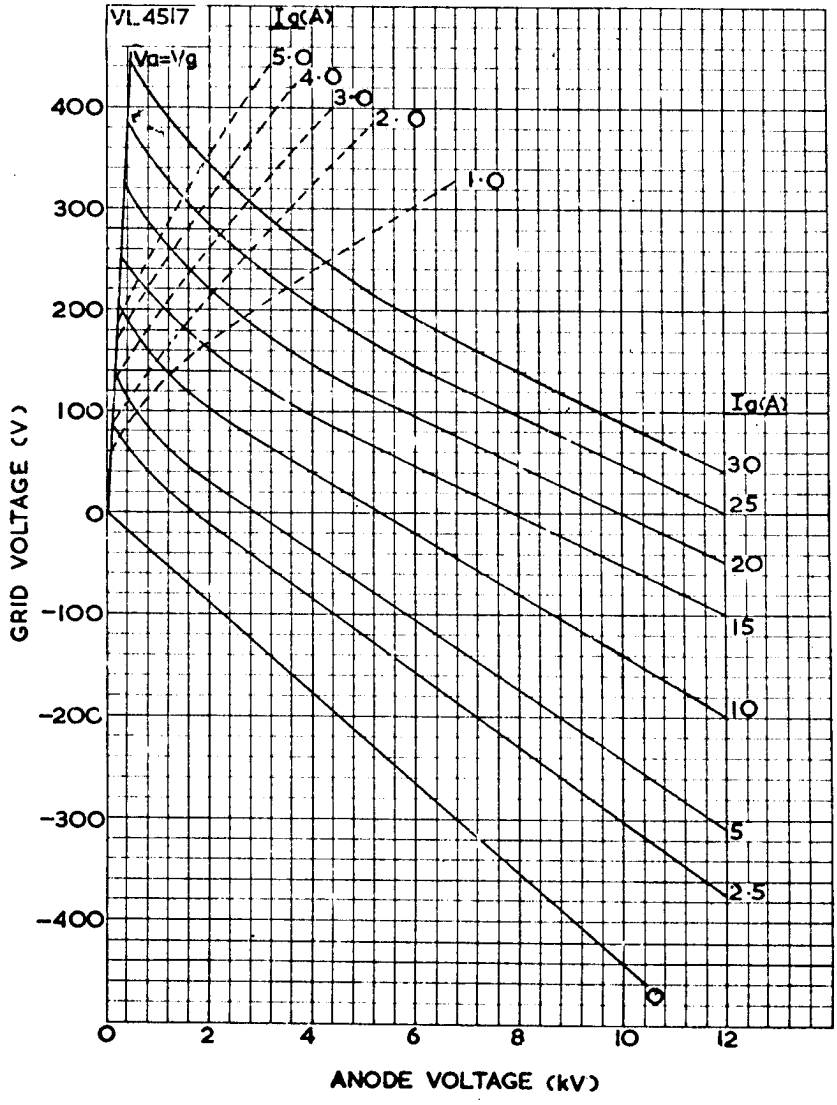

STC

Code: 3R/252E

CONTINUED

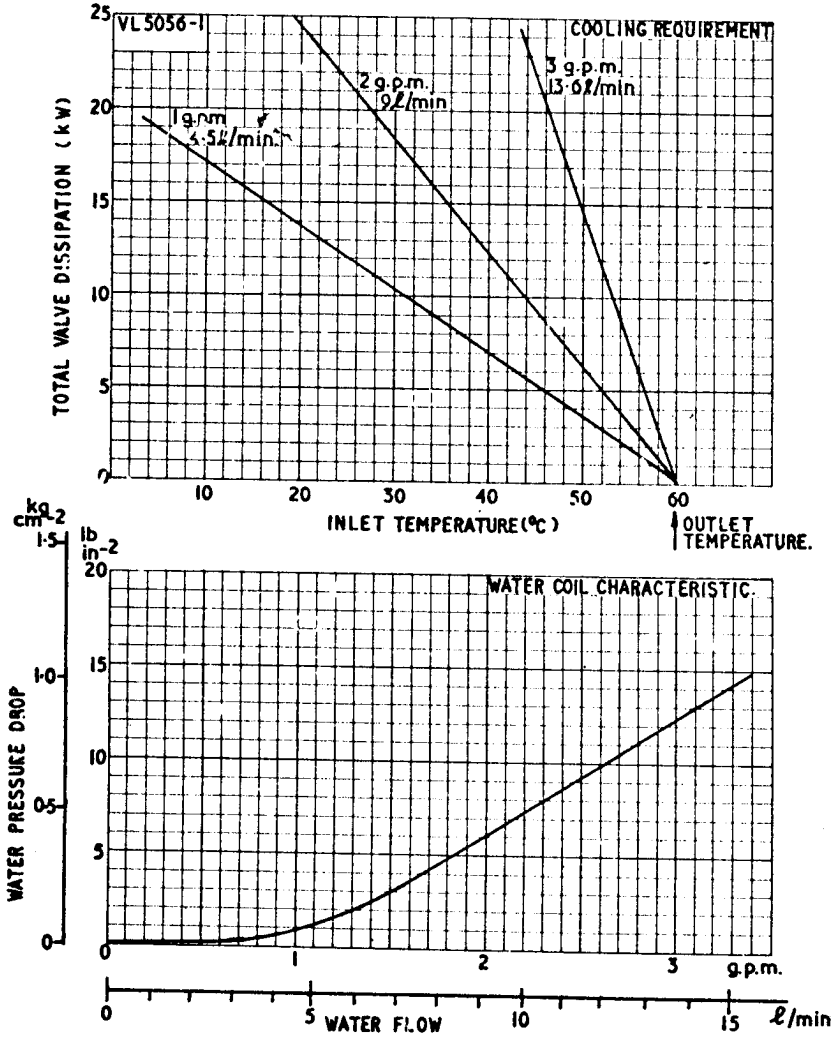

Code: 3R/252E

CONTINUED

3R/252E Outline

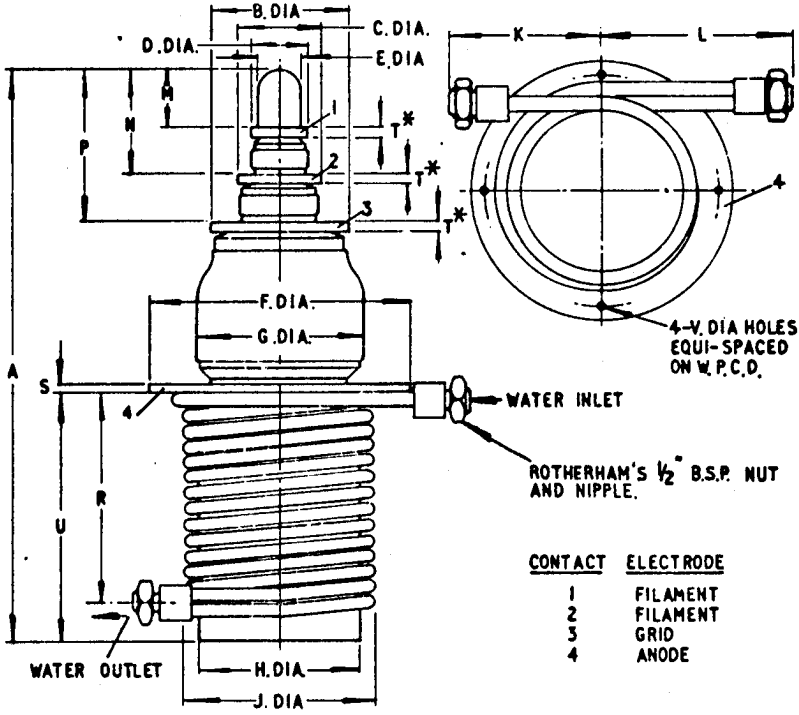

DIM	MILLIMETRES	INCHES	DIM	MILLIMETRES	INCHES
A	344,5 MAX	13 9/16 MAX.	M	38,1 ± 1,6	1 1/2 ± 1/16
B	88,9 ± 0,4	3 1/2 ± 1/64	N	60,3 ± 4,8	2 3/8 ± 3/16
C	50,8 ± 0,4	2 ± 1/64	P	95,3 ± 4,8	3 3/4 ± 3/16
D	31,8 ± 0,4	1 1/4 ± 1/64	R	123,8 ± 1,6	4 7/8 ± 1/16
E	25,4 MAX.	1 MAX.	S	4,8 ± 0,4	3/16 ± 1/64
F	155,6 ± 0,8	6 1/8 ± 1/32	T	4,7 MIN. 6,4 MAX.	3/16 MIN. 1/4 MAX.
G	101,6 MAX.	4 MAX.	U	153,2 MAX.	6 1/32 MAX.
H	96,8 ± 0,8	3 13/16 ± 1/32	V	7,94 ± 0,18	0·312 ± 0·007
J	114,3 MAX.	4 1/2 MAX.	W	139,70 ± 0,25	5·500 ± 0·010
K	79,4 MAX.	3 1/8 MAX.	* DENOTES – CONTACT LENGTH. NOTE – BASIC FIGURES ARE INCHES.		
L	104,8 MAX.	4 1/8 MAX.			

© 1965 Standard Telephones & Cables Ltd.

The 3R/262E has an integral water jacket and is intended primarily for r.f. heating applications.

MAXIMUM RATINGS

Anode voltage (peak value of direct voltage plus ripple)	7,0	kV
Direct anode current	10	A
Anode dissipation, continuous	24	kW
Grid dissipation, continuous	1,0	kW
Direct negative grid voltage	-1 500	V
Maximum frequency for above ratings	30	MHz

TYPICAL OPERATING CONDITIONS

Class C. Industrial Heating R.F. Oscillator

Filament voltage	8,0V ± 5%	8,0V ± 5%	
Filament current, nominal	300	300	A
Direct anode voltage	6,0	6,5	kV
Direct grid voltage	-850	-925	V
Direct anode current	9,0	9,9	A
Peak r.f. grid voltage	1 270	1 375	V
Direct grid current (Note 1)	1,37 (2,0)	1,37 (2,0)	A
Anode dissipation	13	16,5	kW
Grid dissipation (Note 1)	590	630	W
Grid resistor	620	680	Ω
Power output	41	48	kW
Power output, less drive	39	46	kW
Power into load at 85% transfer efficiency	33	39	kW

Note 1. Subject to wide variation dependent upon impedance of load circuit. Value of current shown in brackets is typical of off-load conditions and is given for guidance only: a practical figure is dependent upon compensatory devices in the grid circuit.

December 1970

ITT Components Group Europe
Standard Telephones and Cables Limited
Valve Product Division, Brixham Road, Paignton, Devon
Telephone: Paignton 50762 (STD Code 0803). Telex: 42830

ITT COMPONENTS
© International Telephone and Telegraph Corporation.
All rights reserved.

TYPICAL OPERATING CONDITIONS (continued)

Class AB_1, AB_2. A.F. Amplifier - (2 tubes)

	Class AB_1	Class AB_2	
Filament voltage	8,0V ± 5%	8,0V ± 5%	
Filament current, nominal	300	300	A
Direct anode voltage	6,5	7,0	kV
Direct anode current	2 x 3,2	2 x 5,8	A
Grid bias	-540	-550	V
Grid voltage swing, peak-to-peak	1 040	1 420	V
Anode-to-anode load	1,8	1,3	kΩ
Anode dissipation	2 x 10	2 x 13	kW
Power input	42	80	kW
Power output	22	54	kW
Grid current		190	mA
Drive power (Note 2)		2 x 135	W
Bias power loss		2 x 104	W
Grid dissipation		2 x 31	W

Note 2. Figures given do not include all circuit losses.

CATHODE

Thoriated tungsten filament		
Maximum usable emission	60	A
Cold filament resistance	0,0034	Ω

It is recommended that some resistance or reactance be introduced into the filament supply to limit the surge current to about two and a half times the normal r.m.s. working value. This impedance may be short-circuited if desired as soon as the surge has decayed.

For tube operation at frequencies above 30MHz, it is recommended that the r.f. return path to the cathode be capacitively coupled to both filament terminals.

CHARACTERISTICS

Amplification factor (at V_a = 4,5kV : I_a = 4A)	12	
Mutual conductance (at V_a = 2,0kV : V_g = -87V)	60	mA/V

DIRECT INTERELECTRODE CAPACITANCES

Grid to anode	86	pF
Grid to filament	106	pF
Anode to filament	6,0	pF

COOLING

The anode must be cooled by an adequate water flow. (See Figures 3 and 4). It is essential that the water enters the water jacket at its lowest point in relation to the attitude of the tube when mounted.

Forced air cooling of the grid and filament seals is required to limit their temperature to below the maximum permissible value of 180°C. An air flow of 50 ft^3/min (1,42 m^3/min) directed vertically downwards on to the seals from a 4 inch (10 cm) diameter orifice is sufficient for operation at frequencies up to 30 MHz. At higher frequencies, additional cooling of the grid seal may be required.

MECHANICAL DATA

Dimensions	As shown in outline drawings included
Mounting position	Vertical, anode upwards or downwards
Weight of tube	12,6 lb (5,7 kg)
Accessories	Filament and grid connectors, which are supplied as separate items, are available under following codes: CN-2A Filament connector ring, smaller CN-2B Filament connector ring, larger CN-2C Grid connector ring

Fig. 1. Constant Voltage Characteristics

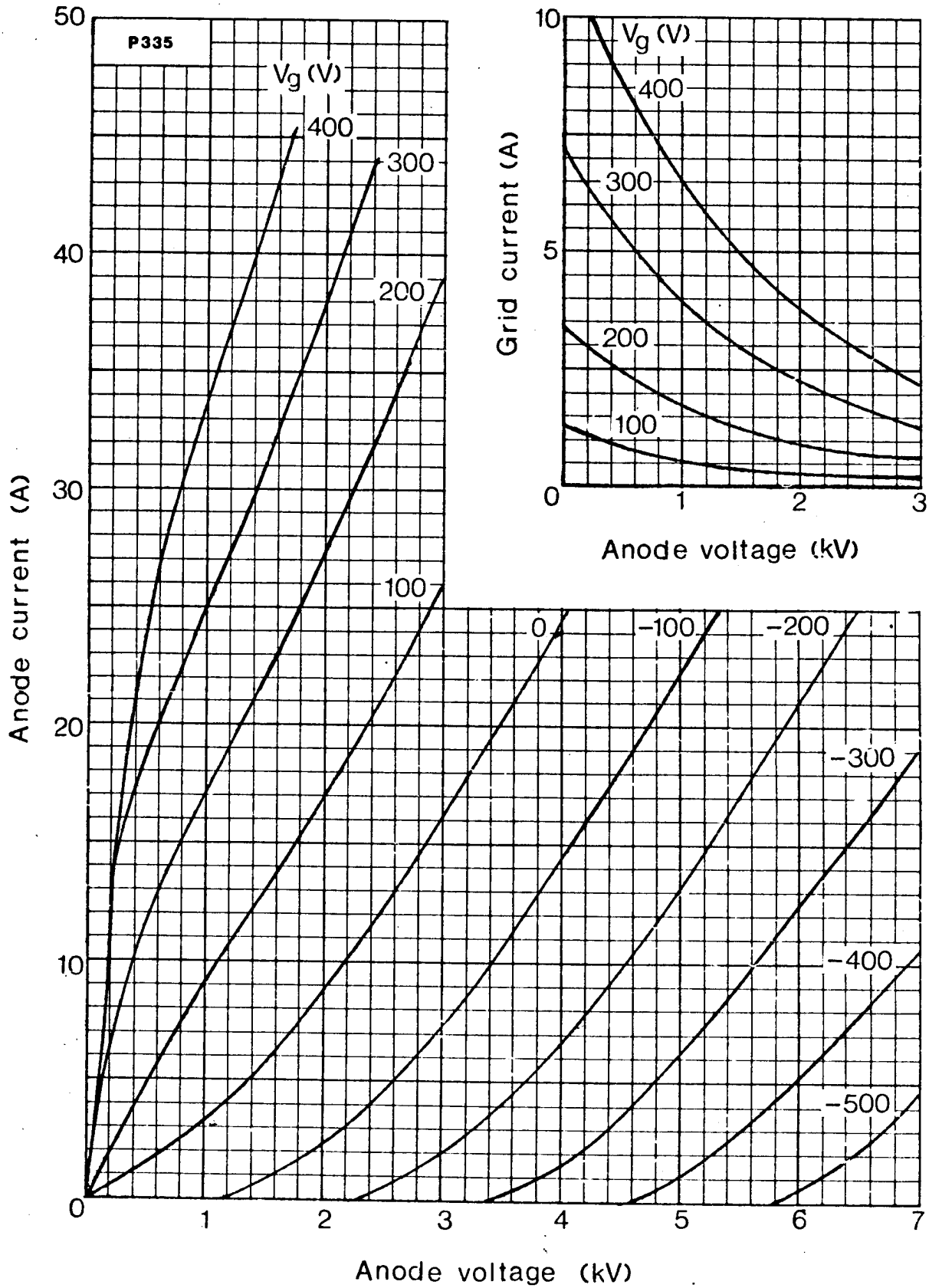

Fig. 2. Constant Current Characteristics

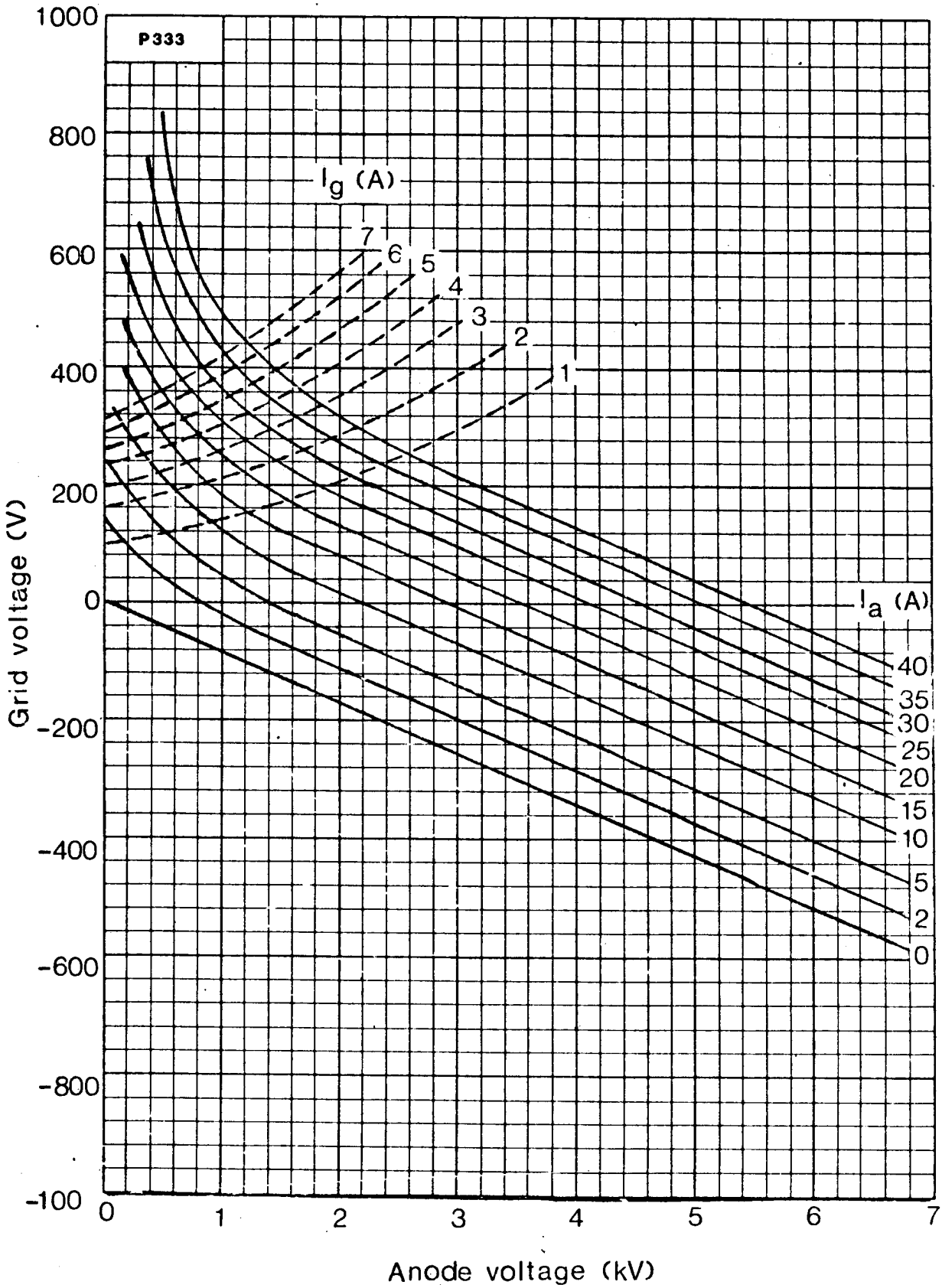

Fig. 3. Cooling Water Requirement for Outlet Water Temperature of 60°C

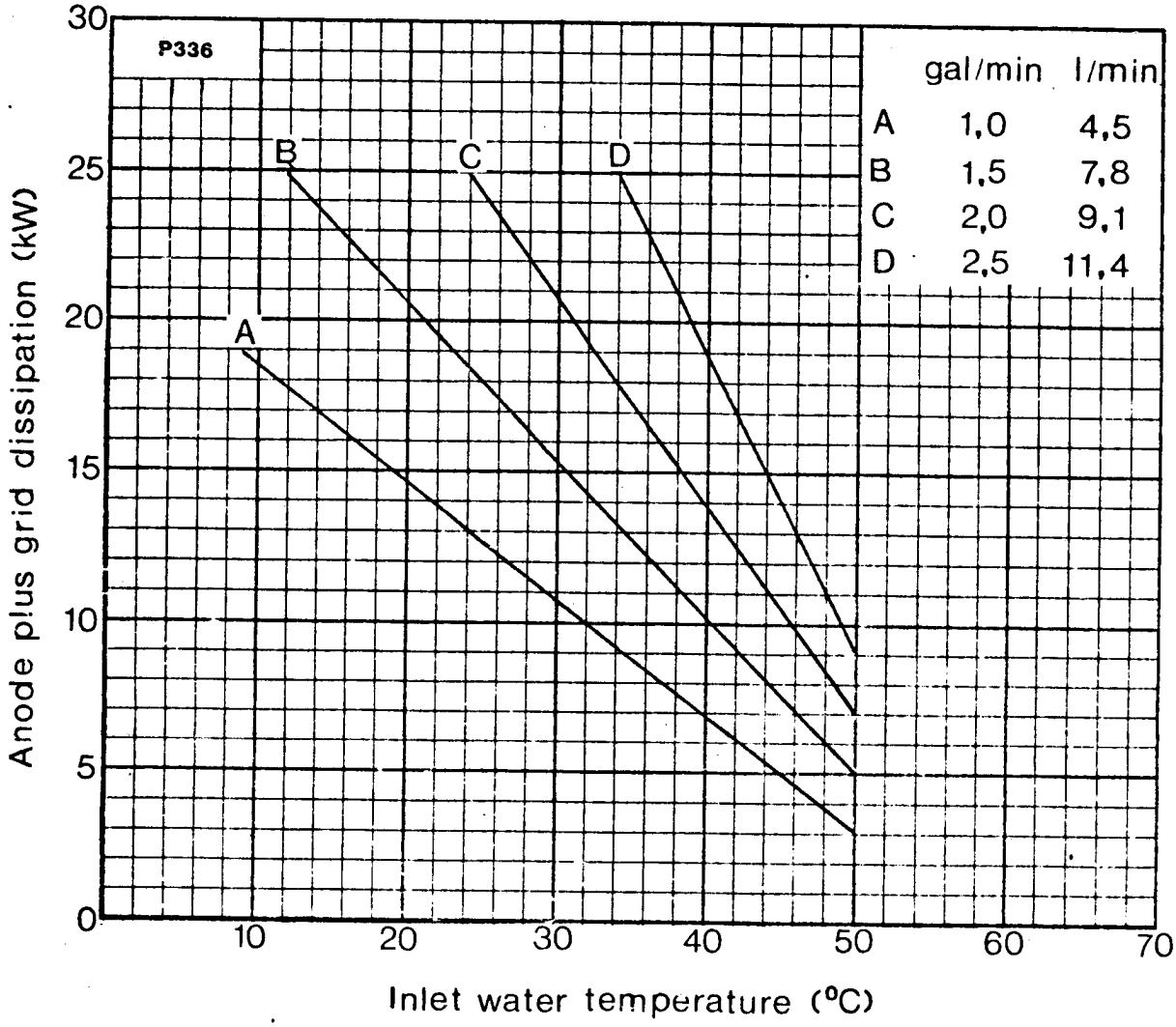

Fig. 4. Water Coil Characteristic

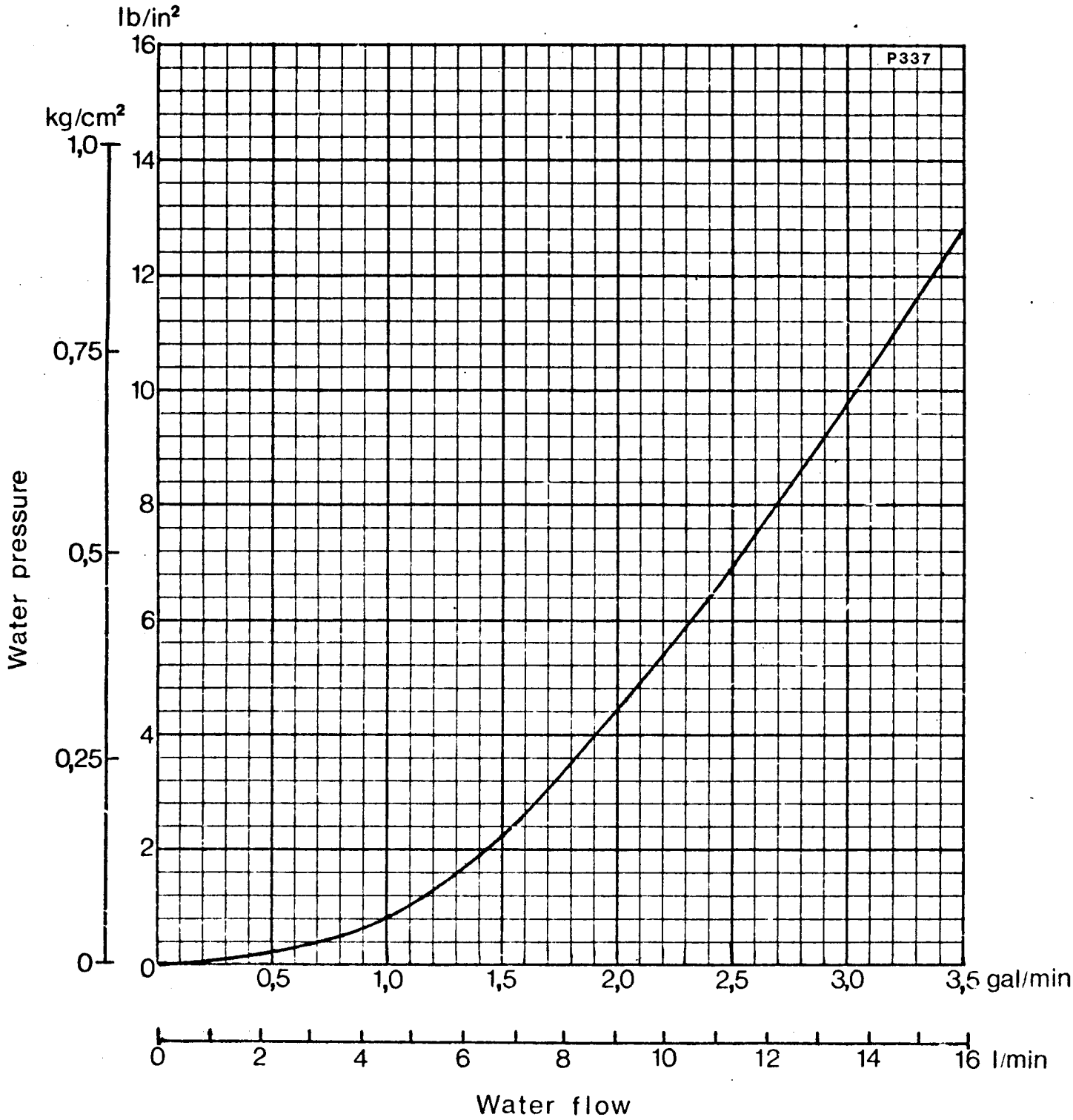

3R/262E Outline

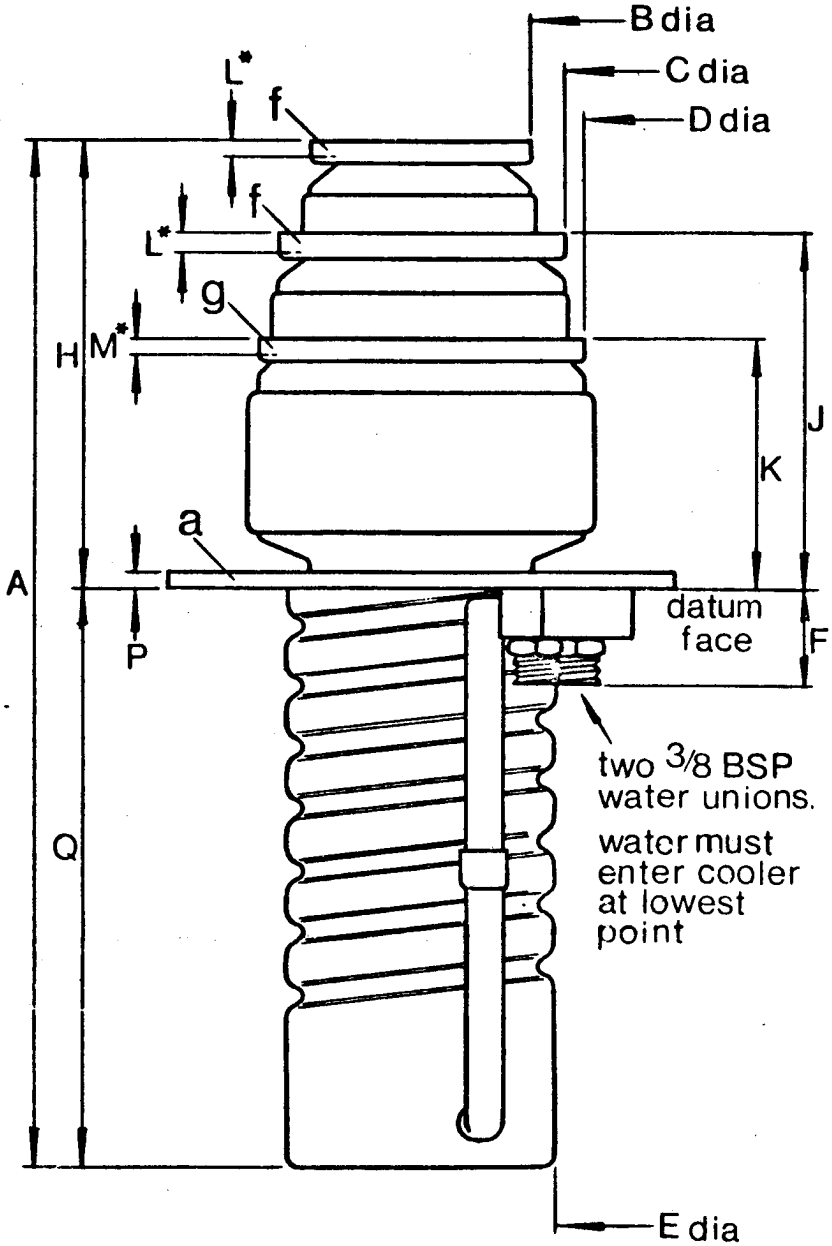

dim.	millimetres	inches
A	370,08 max.	14,57 max.
B	77,85 ± 0,25	3,065 ± ,010
C	100,08 ± 0,25	3,940 ± ,010
D	114,83 ± 0,25	4,521 ± ,010
E	94,0 max.	3,70 max.
F	33,27 ± 1,52	1,31 ± ,06
H	157,23 ± 9,65	6,19 ± ,38
J	126,24 ± 4,83	4,97 ± ,19
K	88,14 ± 2,29	3,47 ± ,09
L	4,57 min. 7,87 max.	,18 min. ,31 max.
M	6,35 min. 9,65 max.	,25 min. ,38 max.
P	6,35 ± 0,38	,25 ± ,015
Q	203,2 max.	8,00 max.
R	65,02 max.	2,56 max.
T	146,05 t.p.	5,750 t.p.
U	9,53 ± 0,18	,375 ± ,007
V	177,8 ± 0,76	7,00 ± ,030
W	46,48 t.p.	1,83 t.p.
X	24,13 t.p.	,95 t.p.
Y	69,09 t.p.	2,72 t.p.
Z	46,48 t.p.	1,83 t.p.

*denotes contact length

metric dimensions are derived from original inch dimensions

5 holes of U dia. spaced as shown on T p.c.d. t.p.
posn. tol. 0,010 in. dia. datum dia. V

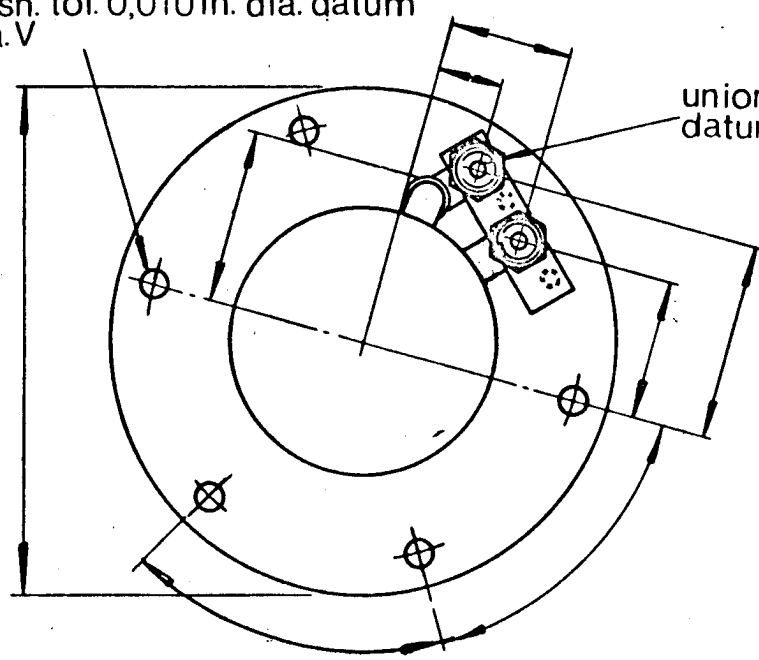

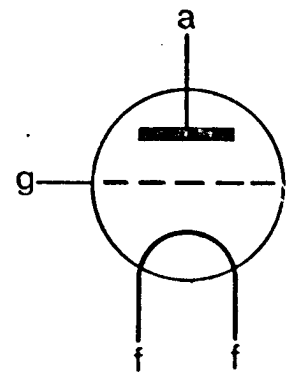

STC VALVES

Water-Cooled Industrial Triode with Integral Water Jacket

Code: 3R/280E

The 3R/280E is designed primarily for induction heating applications. Design features give a high mutual conductance resulting in high efficiency with the low grid dissipation and large safety factor which are desirable when the valve is operated under variable-load conditions.

CATHODE

Thoriated tungsten filament		
Filament voltage	8 (±5%)	V
Filament current, nominal (Note 1)	300	A
Maximum usable emission	60	A

NOTE 1.—It is recommended that some resistance or reactance be introduced into the filament supply to limit the surge peak current to about two and a half times the normal r.m.s. working value. This impedance may be short-circuited as soon as the surge has decayed.

CHARACTERISTICS

Amplification factor	24	
Mutual conductance	75	mA/V

DIRECT INTERELECTRODE CAPACITANCES

Grid to anode	50	pF
Grid to filament	110	pF
Anode to filament	2	pF

MECHANICAL DATA

Dimensions, Connection detail } As shown in Figure 2

Mounting position Vertical, anode downwards

Filament and grid connector rings are available separately under the following codes:

CN-2A Filament connector, smaller
CN-2B Filament connector, larger
CN-2C Grid connector

Standard Telephones and Cables Limited
Valve Division, Brixham Road, Paignton, Devon
Telephone: Paignton 50762 Telex: 4230
London Sales Office, Telephone: Footscray 3333 Telex: 21836
COMPONENTS GROUP

STC

Code: 3R/280E

CONTINUED

COOLING REQUIREMENTS

The anode must be cooled by an adequate water flow through the integral water jacket. It is important to ensure that the water inlet and outlet connections to the water jacket are correct.

Forced-air-cooling of the grid and filament seals is required to limit their temperature to below the maximum permissible value of 180°C: an air flow of 50 ft³/min (1,42 m³/min) directed vertically downwards on to the seals from a 4-inch (10cm) diameter orifice is sufficient for normal operation.

MAXIMUM RATINGS AND TYPICAL OPERATING CONDITIONS

CLASS C. INDUSTRIAL HEATING OSCILLATOR

Maximum Ratings

Maximum direct anode voltage (peak value of direct voltage plus ripple)	13	kV
Maximum direct anode current	10	A
Maximum direct anode dissipation (continuous)	30	kW
Maximum direct grid dissipation (continuous)	1	kW
Maximum negative grid bias	−1·5	kV
Maximum frequency for above ratings	10	MHz

Typical Operating Conditions

Direct anode voltage	8·5	10	12	kV
Direct grid voltage	−610	−670	−760	V
Direct anode current	10	10	10	A
Peak r.f. grid voltage	1 060	1 120	1 210	V
Direct grid current (Note 2)	1·4	1·37	1·31	A
Grid resistor	435	490	575	Ω
Grid dissipation (Note 2)	600	600	600	W
Anode dissipation	24	26	29	kW
Power input	85	100	120	kW
Power output (oscillator)	61	74	91	kW
Power into load at 85% transfer efficiency	52	63	77·5	kW

NOTE 2.—Subject to wide variation dependent upon the impedance of the load circuit.

Code: 3R/280E

CONTINUED

Fig. 1.—Anode Current and Grid Current versus Anode Voltage

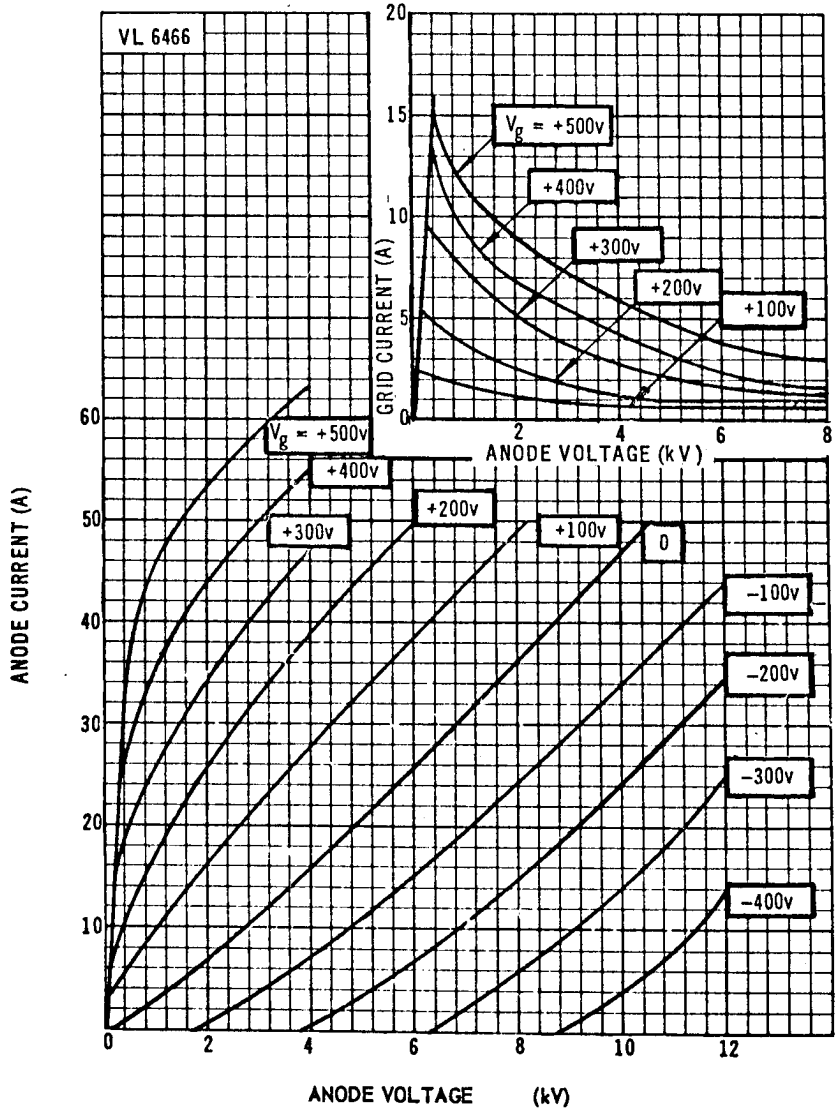

STC

Code: 3R/280E

CONTINUED

Fig. 2.—Cooling Characteristics

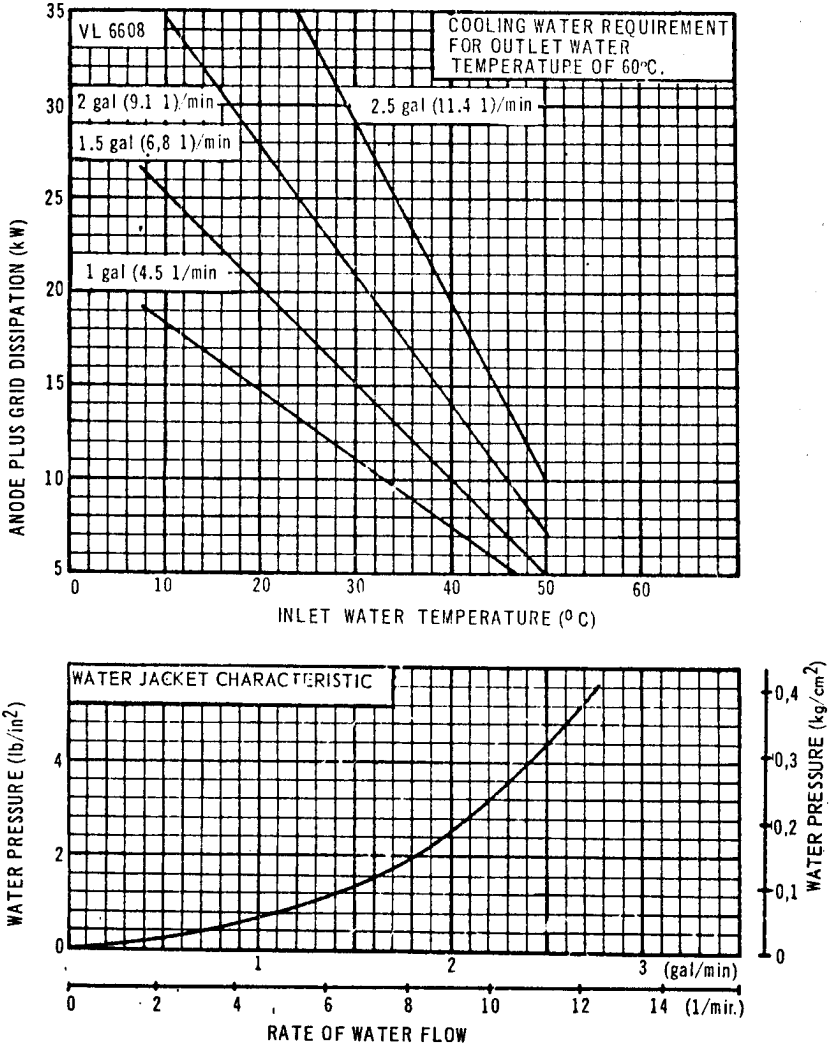

Code: 3R/280E

CONTINUED

Fig. 3.—3R/280E Outline

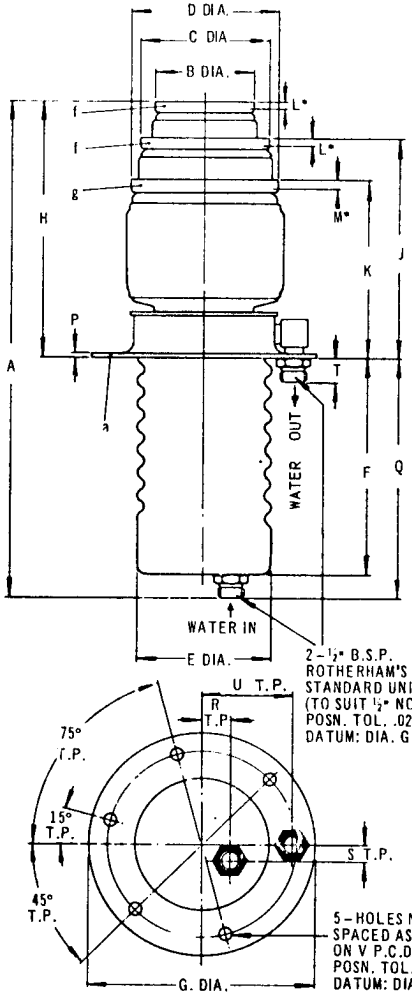

DIM.	MILLIMETRES	INCHES
A	410 MAX.	16.125 MAX.
B	77,85 ± 0,25	3.065 ± 0.010
C	100,08 ± 0,25	3.940 ± 0.010
D	114,83 ± 0,25	4.521 ± 0.010
E	107 MAX	4.200 MAX.
F	171,5 ± 1,6	6.750 ± 0.062
G	177,80 ± 0,8	7.000 ± 0.030
H	206,4 ± 10,2	8.125 ± 0.400
J	178,6 ± 5,6	7.031 ± 0.220
K	145,3 ± 3,2	5.720 ± 0.125
L	4,8 MIN.	0.187 MIN.
	7,9 MAX.	0.313 MAX.
M	6,4 MIN.	0.250 MIN.
	9,5 MAX.	0.375 MAX.
N	9,53 ± 0,18	0.375 ± 0.007
P	3.18 ± 0.25	0.125 ± 0.010
Q	190,50 ± 2,4	7.500 ± 0.094
R	22,23 T.P.	0.875 T.P.
S	12,70 T.P.	0.500 T.P.
T	19,05 ± 0,3	0.750 ± 0.030
U	72,12 T.P.	2.840 T.P.
V	146,05 ± T.P.	5.750 T.P.

TOLERANCES TC BS 308. 1964

BASIC DIMENSIONS ARE INCHES

* DENOTES: CONTACT LENGTH

MAGNETICALLY-BEAMED INDUSTRIAL TRIODE

Code: 3RM/215G

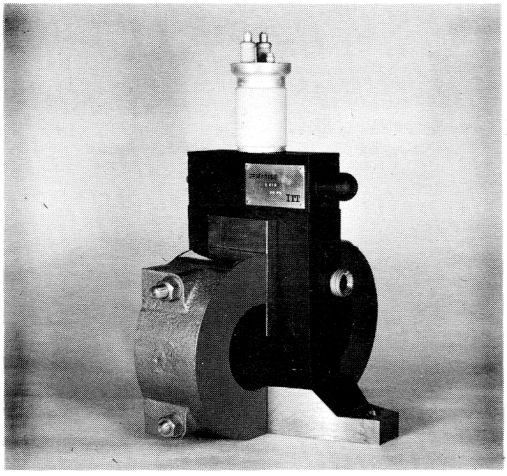

DESCRIPTION

This new device employs the field of a permanent magnet to guide the electron flow from cathode to anode.

A controlling electrode, designated 'gate', replaces the conventional wound grid with its attendant problems of emission and distortion. The gate, which is of solid and robust construction, is used to modulate the flow of electrons, and is positioned so that very few electrons are intercepted by it.

As the gate dissipation is negligible, the gain of the tube is very high (approximately 30dB), and the driving power required for full output is low compared with that for a conventional triode. However, the drive voltage is as high as with a conventional triode, ensuring as good a rejection of spurious drive signals.

The relatively high impedance of the gate circuit allows the use of additional components of moderate power ratings for power control or switching in this circuit.

The tube may be used with advantage in r.f. amplifiers, oscillators and r.f. heating applications. The efficiency is good at low anode voltage as well as at higher levels.

ITT Components Group Europe
Standard Telephones and Cables Limited
Valve Product Division, Brixham Road, Paignton, Devon
Telephone: Paignton 50762 (STD Code 0803) Telex: 42830

ITT COMPONENTS

© International Telephone and Telegraph Corporation. All rights reserved.

A particular feature of the tube when used for r.f. heating is its ability to withstand interruption of oscillation resulting from circuit or loading faults; this is because the anode dissipation at full h.t. and zero bias is well within the tube rating at anode voltages up to 4kV.

High efficiency operation at low anode voltage is obtained because of the low anode bottoming potential, whilst the overall efficiency of the tube is enhanced by the lower heating power associated with the matrix type cathode.

The construction of the whole tube is very robust and the breakage and distortion hazards encountered in high temperature filamentary emitters are eliminated.

Anode cooling is effected by means of a newly developed integral, low pressure drop, transverse flow water jacket. Base cooling is not required at operating frequencies below 1MHz.

CATHODE

Indirectly heated, matrix type

HEATER

Heater voltage	12,5	V
Heater current	12	A

CHARACTERISTICS

Amplification factor	42	
Mutual conductance	40	mA/V

DIRECT INTERELECTRODE CAPACITANCES

Gate to anode	55	pF
Gate to cathode	63	pF
Anode to cathode (gate earthed)	6,8	pF

MECHANICAL DATA

Dimensions Connection detail	As shown in Figure 4			
Magnet	A recommended permanent magnet, the outline of which is shown in Figure 4 can be supplied as an additional accessory.			
Mounting position	Unrestricted			
Weight of valve, approx.		10 lb 7 oz	4,75	kg

COOLING REQUIREMENTS

For an anode dissipation of 10kW, a water flow of 1,5 gal/min (6,8 l/min) is required. No other cooling is required at operating frequencies below 1MHz. At higher frequencies forced-air cooling of the seals may be necessary to keep their temperatures within the maximum rating of 220°C.

LIMIT RATINGS AND TYPICAL OPERATING CONDITIONS

CLASS C. INDUSTRIAL HEATING OSCILLATOR

Limit Ratings

Maximum direct anode voltage (peak value of direct voltage plus ripple)	6,5	kV
Maximum direct anode voltage for fail-safe if oscillation ceases	4	kV
Maximum peak cathode current	24	A
Maximum direct anode current	5,5	A
Maximum direct anode dissipation (continuous)	8	kW
Maximum direct gate voltage	-750	V
Maximum frequency for above ratings	10	MHz

Typical Operating Conditions (Measured in induction heating generator)

Direct anode voltage*	2,5	3,0	4,0	5,0	6,0	6,0	kV
Direct gate voltage	-470	-440	-445	-415	-520	-500	V
Direct anode current	4,49	5,02	5,15	5,25	5,2	2,7	A
Peak r.f. gate voltage	1 007	1 004	987	947	1 107	870	V
Direct gate current							
on load	90	85	86	80	100	16	mA
off load	170	160	160	150	180	30	mA
Gate bias resistor	5,2	5,2	5,2	5,2	5,2	33	kΩ
Gate dissipation	48,5	48	46,5	42,5	58,7	6	W
Power input	11,2	15	20,6	26,25	31,2	16,2	kW
Anode dissipation	4,1	5,30	6,3	7,25	8,0	3,2	kW
Power output (oscillator)	7,1	9,7	14,3	19,0	23,2	13	kW
Power into load at 90% transfer efficiency	6,4	8,75	12,9	17,1	20,9	11,7	kW

* In the event of cessation of oscillation the valve remains within P_a limit at $V_g = 0$, $V_a \not> 4$kV.

Fig. 1. Typical Anode Current and Gate Current versus Anode Voltage

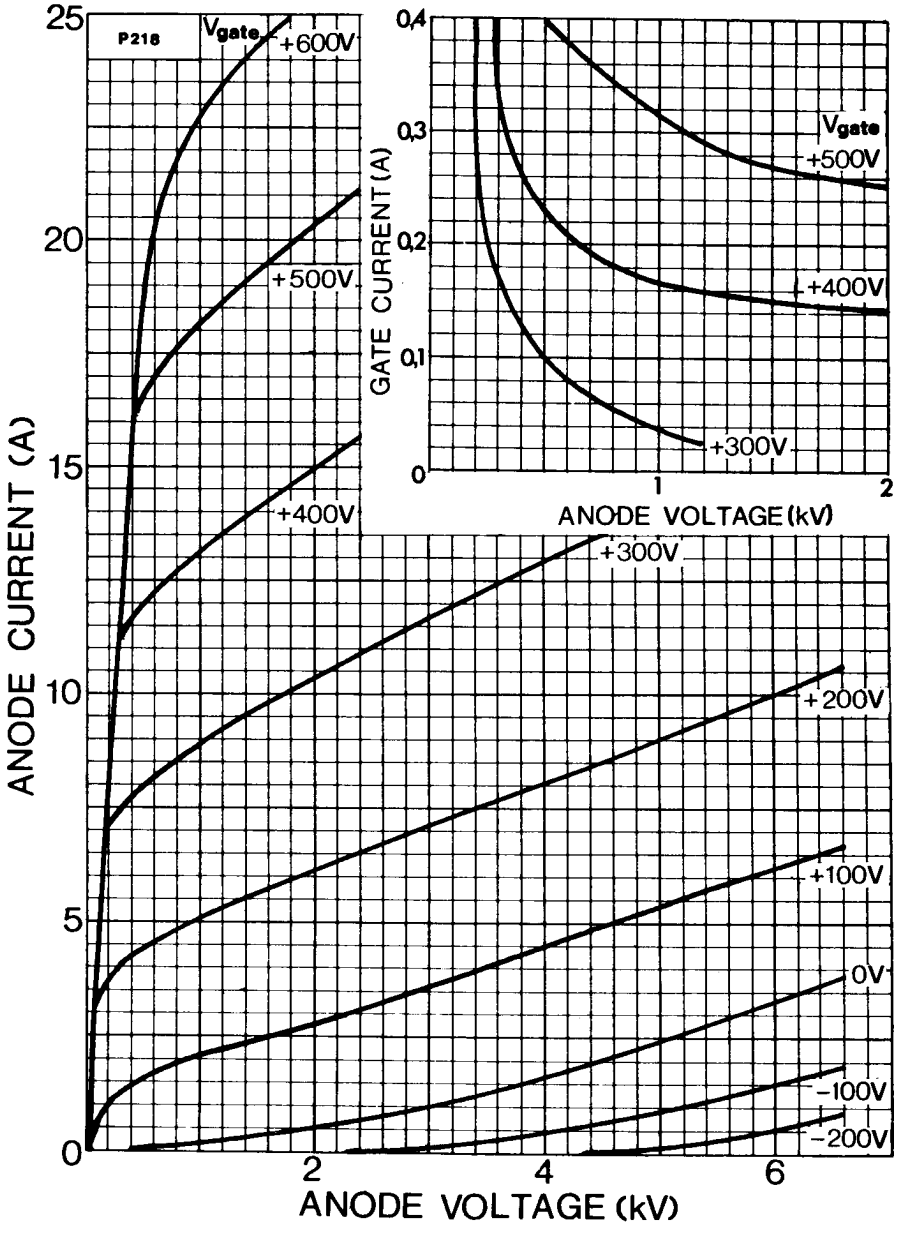

Fig. 2. Typical Constant Current Characteristics

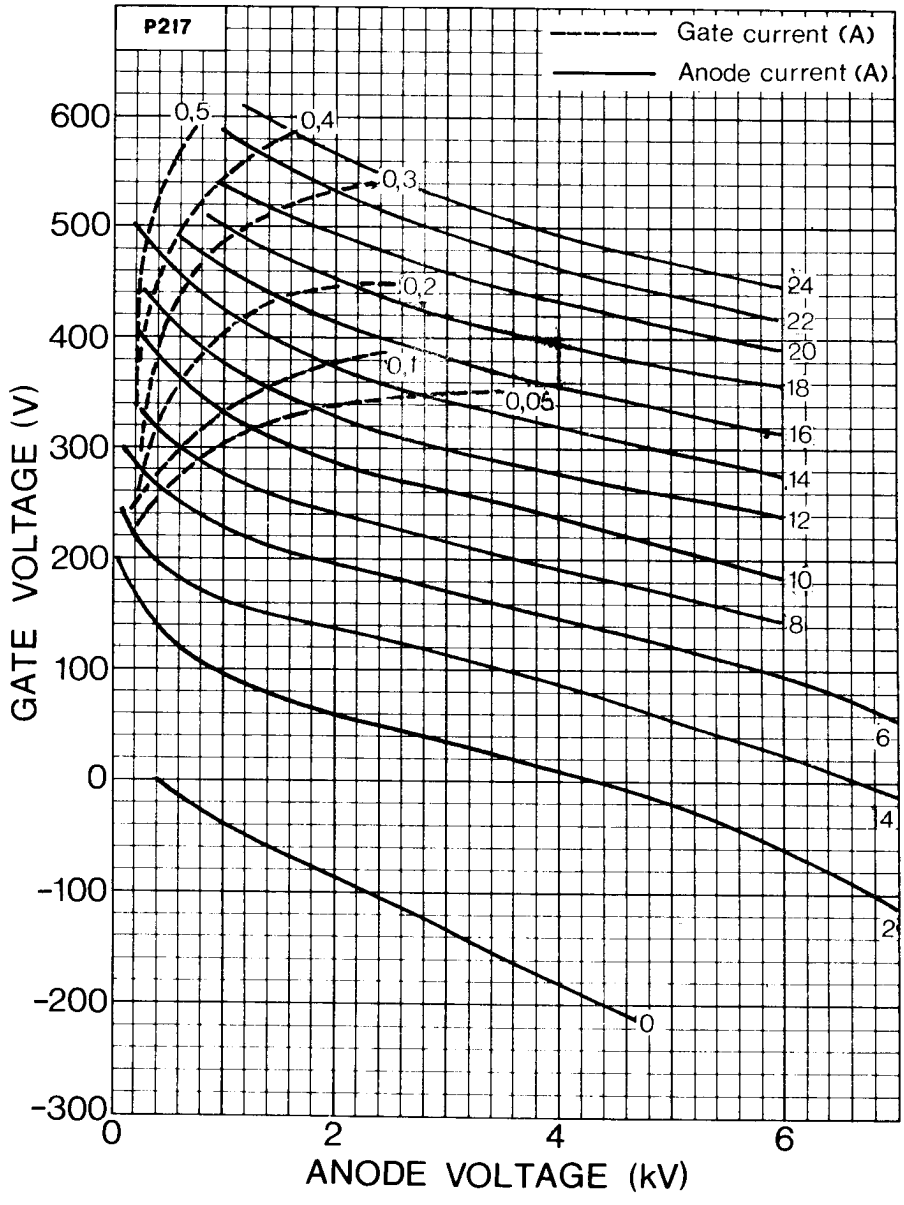

Fig. 3. Typical Anode Current versus Gate Voltage

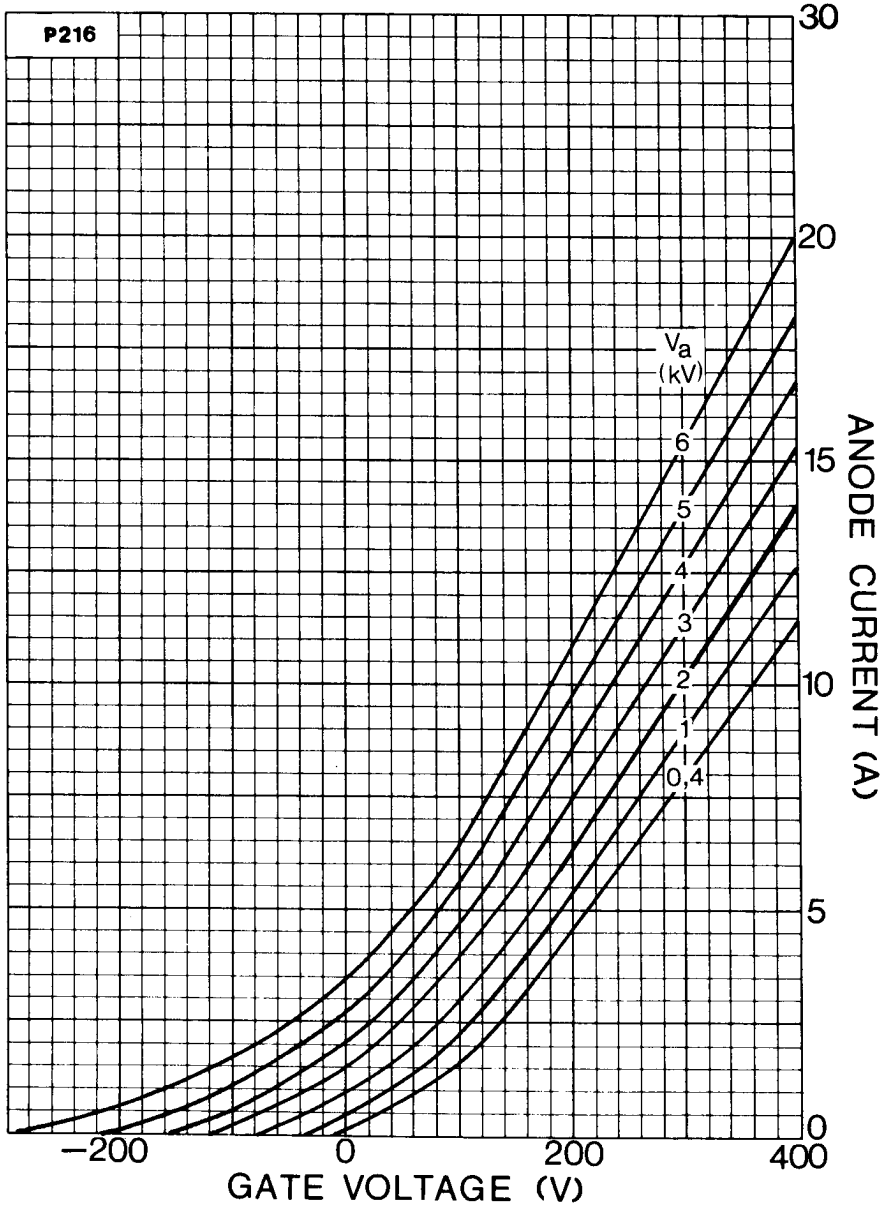

Fig. 4. Tube Outline

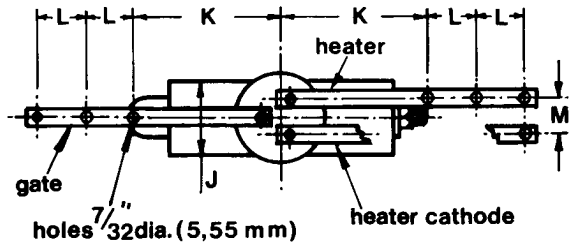

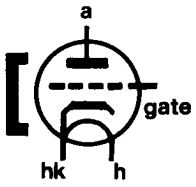

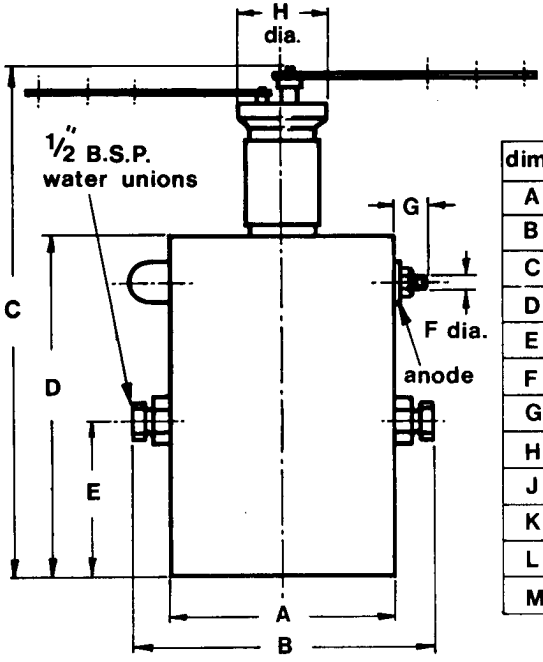

dim.	mm.	ins.
A	117,5 max.	4·625 max.
B	162 max.	6 3/8 max.
C	273 max.	10 3/4 max.
D	177,8 ± 0,8	7 ± 1/32
E	81 approx.	3 3/16 approx.
F	7,94	5/16
G	16 approx.	5/8 approx.
H	45,72 ± 0,8	1·80 ± 0·03
J	43 max.	1 11/16 max.
K	76 approx.	3 approx.
L	25,4 approx.	1 approx.
M	18,7 ± 0,4	0·736 ± 0·015

Fig. 5. Magnet Outline

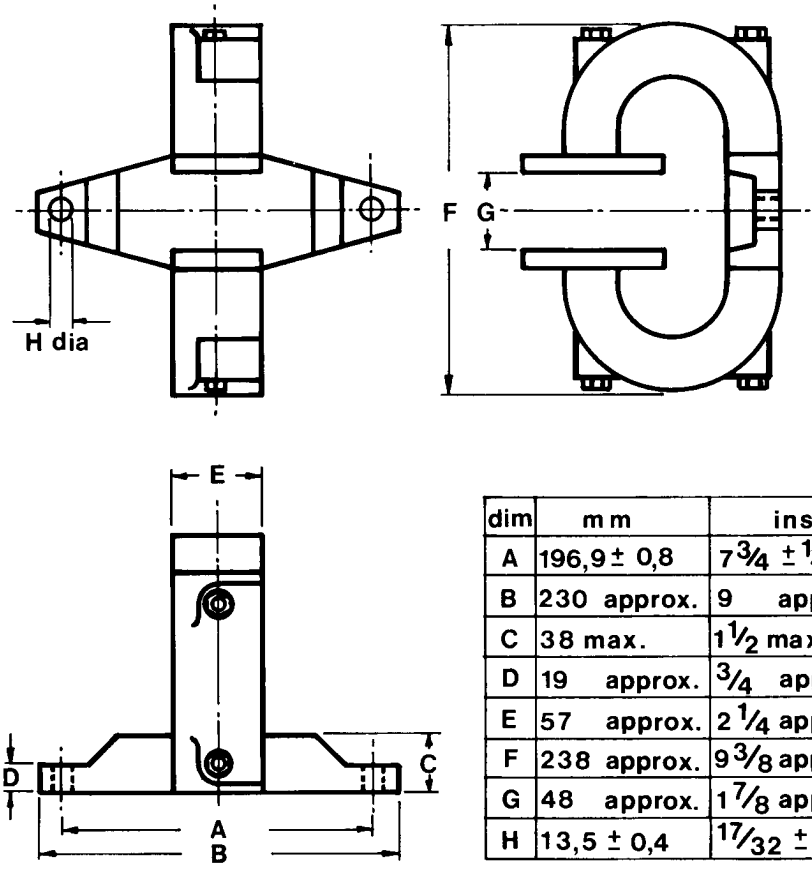

dim	mm	ins
A	196,9 ± 0,8	$7\frac{3}{4} \pm \frac{1}{32}$
B	230 approx.	9 approx.
C	38 max.	$1\frac{1}{2}$ max.
D	19 approx.	$\frac{3}{4}$ approx.
E	57 approx.	$2\frac{1}{4}$ approx.
F	238 approx.	$9\frac{3}{8}$ approx.
G	48 approx.	$1\frac{7}{8}$ approx.
H	13,5 ± 0,4	$\frac{17}{32} \pm \frac{1}{64}$

PROVISIONAL DATA

R.F. POWER TRIODE 3Z/340G

This vapour-cooled triode is designed for use as an r.f. power amplifier or oscillator and is suitable for cathode drive operation.

MAXIMUM RATINGS

Direct anode voltage (Note 1)	14	kV
Direct anode current	18	A
Anode dissipation	125	kW
Grid dissipation	2,75	kW
Maximum operating frequency for above ratings	27	MHz

Note 1. For Class C anode modulated operation (100% carrier modulation) the maximum anode voltage is 12kV.

TYPICAL OPERATING CONDITIONS

Class C. R.F. Power Amplifier or Oscillator

Filament voltage, per filament section	9,6	V
Filament current, nominal, per filament section	290	A
Direct anode voltage	14	kV
Direct grid voltage	-765	V
Peak r.f. grid voltage	1 305	V
Anode current	17,5	A
Grid current, approx.	3,1	A
Anode dissipation	45	kW
Grid dissipation, approx.	1,7	kW
Drive power, approx.	4,0	kW
Output power	200	kW
Efficiency	81	%

January 1971

ITT Components Group Europe
Standard Telephones and Cables Limited
Valve Product Division, Brixham Road, Paignton, Devon
Telephone: Paignton 50762 (STD Code 0803) Telex: 42830

ITT COMPONENTS

© International Telephone and Telegraph Corporation. All rights reserved.

CATHODE

Thoriated tungsten filament (Note 2)

Filament voltage, per section		9,6V ± 5%	
Filament current, per section, at 9,6V	min. 263	max. 311	A
Maximum difference between current in each section		15	A
Filament cold resistance, per section		0,004	Ω
Maximum filament starting current, per section (Note 3)		700	A
Maximum usable emission		175	A

Note 2. The filament consists of two sections. Each section is connected across diagonally opposite pairs of filament terminals. The two filament sections should be operated in phase quadrature.

Note 3. This starting current must not be exceeded even momentarily.

CHARACTERISTICS

Amplification factor (at V_a = 9,0kV : I_a = 5,0A)	min. 31	max. 39	
Mutual conductance (at V_a = 9,0kV : I_a = 5,0A)	min. 78	max. 102	mA/V

DIRECT INTERELECTRODE CAPACITANCES

Grid to anode	108	pF
Grid to filament	259	pF
Anode to filament	3,5	pF

COOLING

The anode, which is fitted into an approved type of boiler, is cooled by the evaporation of water. The resulting steam is condensed by either an internal or an external condenser.

The anode seal and bulb temperatures must not exceed 180°C.

To give protection against overheating of the anode, a thermal fuse is fitted in one of four possible positions provided by threaded holes equally spaced around the top surface of the anode ring. The fuse is screwed into position and connected by a non-conducting cord to a suitable switching device. A cord tension of 1 lb (450 g) will ensure that if the anode temperature exceeds the safe limit, the fuse core is pulled out and the safety switch removes all electrical supplies from the tube.

The filament and grid seals are cooled by forced-air. Normally an air flow of 60 ft^3/min (1,7 m^3/min) directed into the filament header from a 2 inch (50 mm) diameter orifice is sufficient for the purpose.

The maximum temperature of the filament and grid seals must not exceed 140°C.

MECHANICAL DATA

Dimensions	As shown in outline drawing included
Mounting position	Vertical, anode downwards
Net weight	125 lb (57 kg)
Accessories	
Boiler unit Condenser	The tube manufacturer should be consulted as to types required for specific applications
Sealing ring	Type PSL024 supplied with tube
Thermal fuse	Type RSW011A, two supplied with tube
Tube lifting equipment	The tube should be lifted by four lifting hooks applied to the underside of the anode corona ring; the hooks being connected by suitable cables to a spreader plate and lifting tackle.

Anode Characteristics

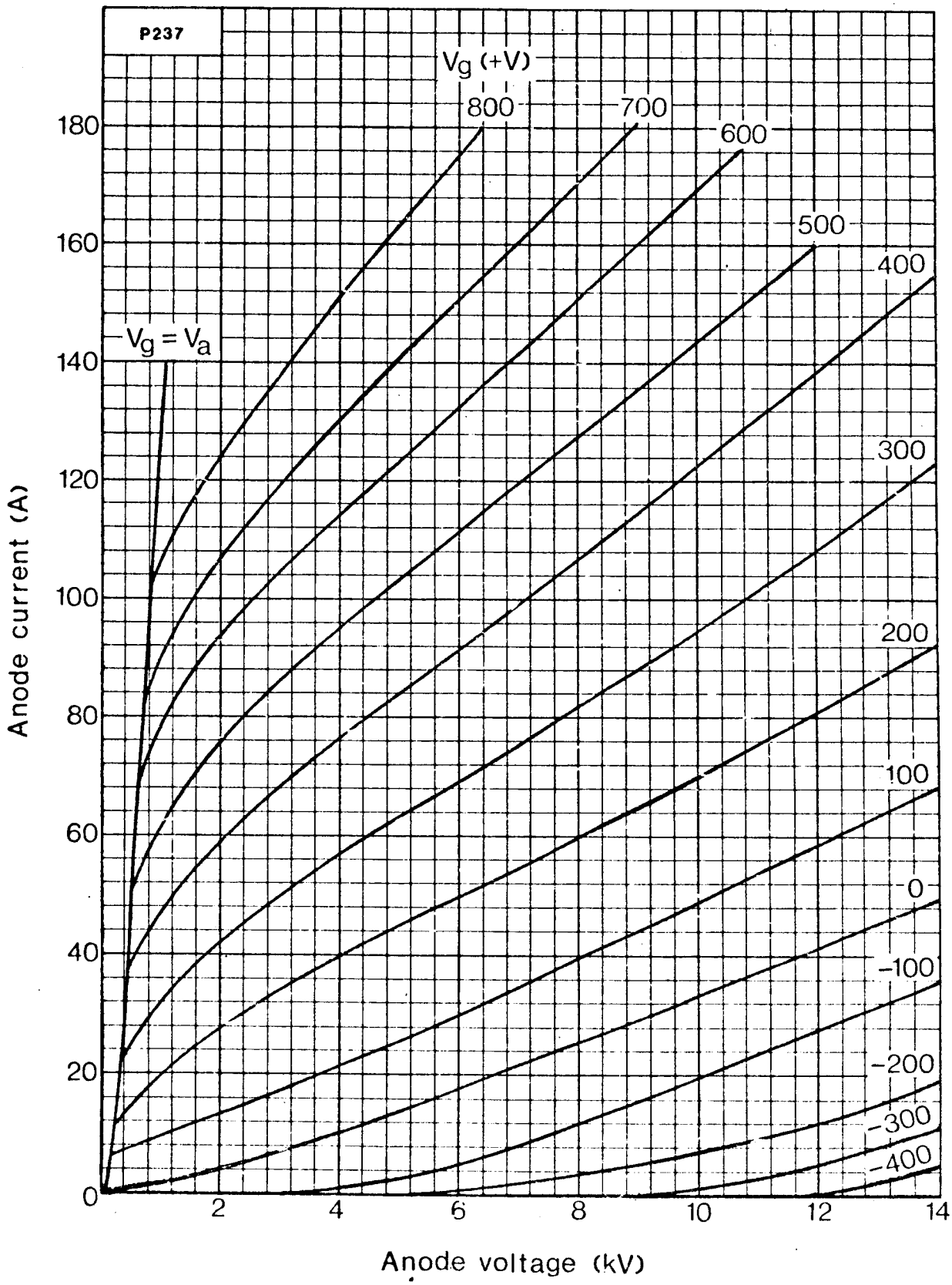

Grid Characteristics

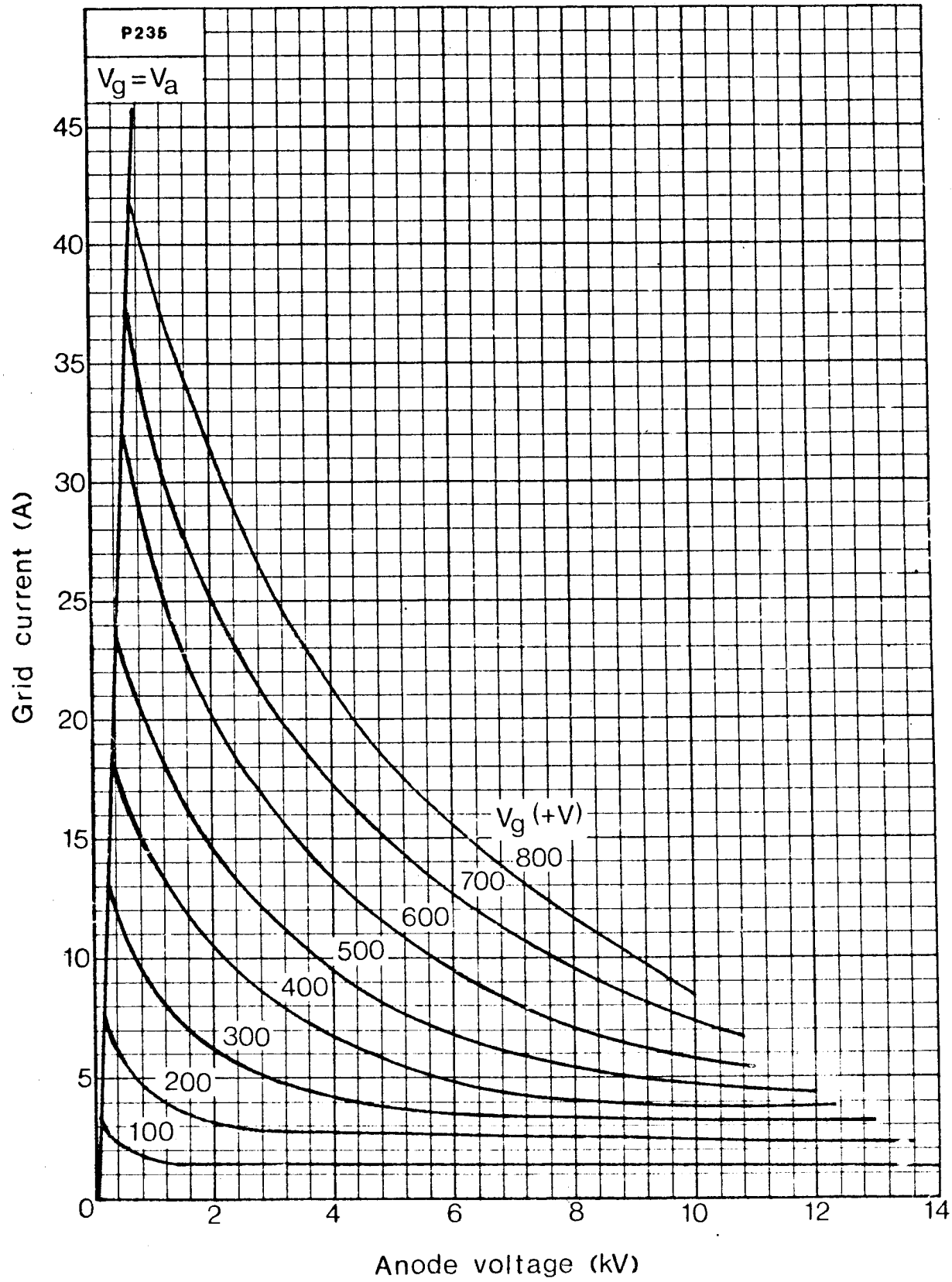

Constant Current Characteristics

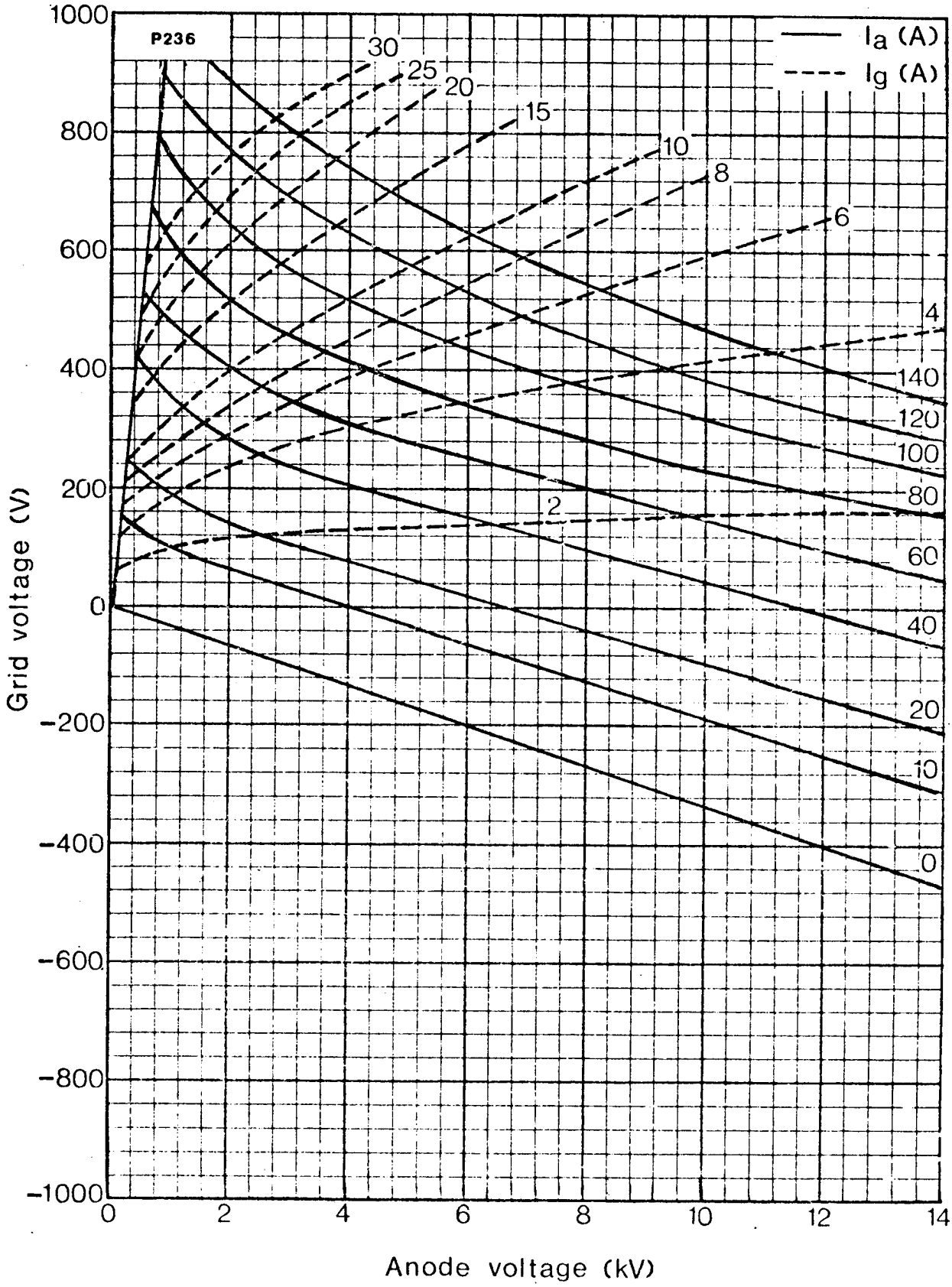

3Z/340G Outline

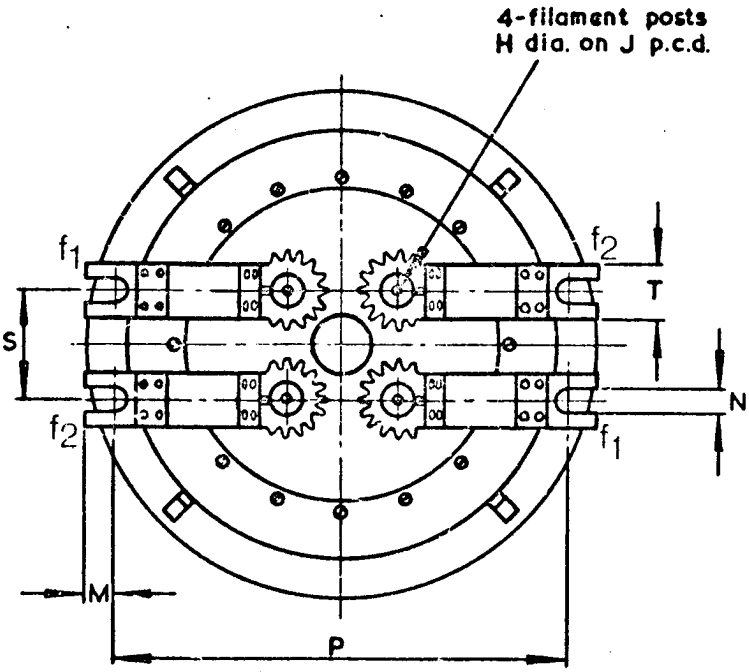

dim.	mm	in
A	332 max.	13·06 max.
B	256,8 ± 6,4	10·11 ±·25
C	610 max.	24·0 max.
D	351 max.	13·8 max.
E	259 max.	10·187 max.
F	6,35 ± 0,76	·25 ±·03
G	50,8	2·0
H	22,23 ± 0,13	·875 ±·005
J	101,6	4·0
K	274,64 ± 0,38	10·812 ±·015
L	236,53 ± 0,38	9·312 ±·015
M	19,0	·75
N	14,27	·562
P	296,85	11·687
Q	152	6·0
R	3,18	·125
S	71,83	2·828
T	31,75	1·25
U	228,6 max.	9·00 max.

Metric dimensions derived from original inch dimensions

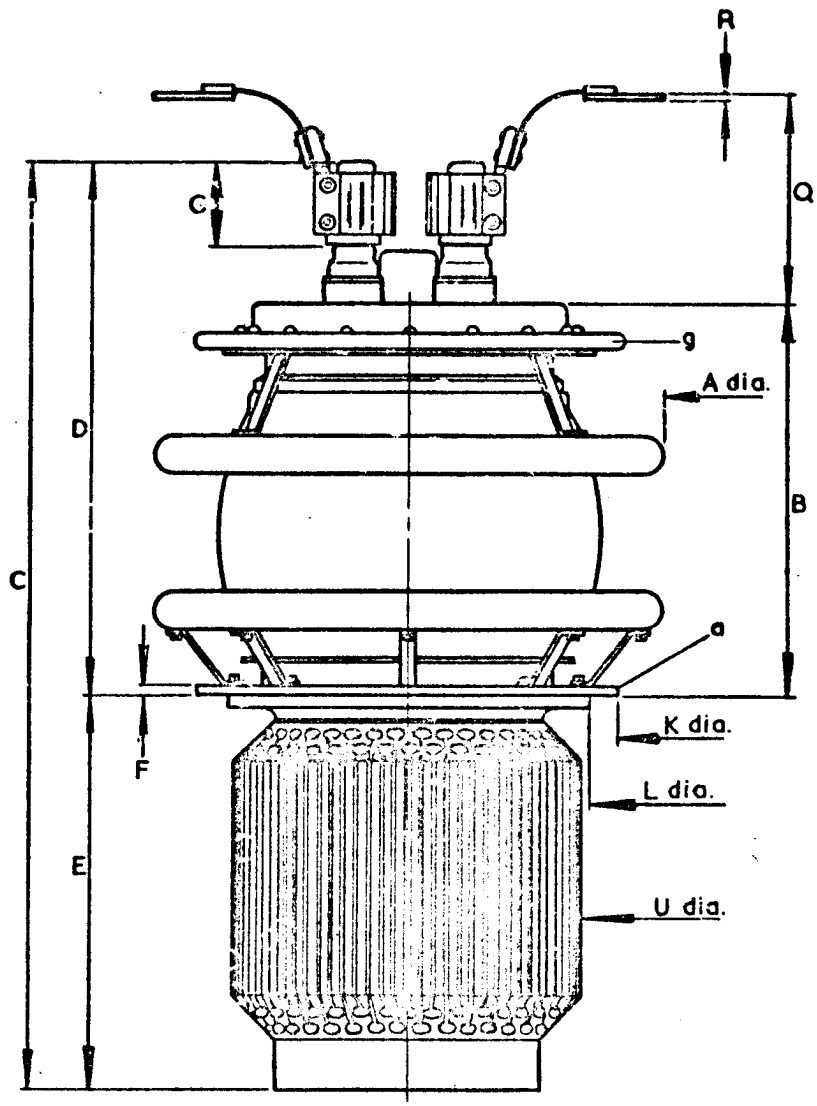

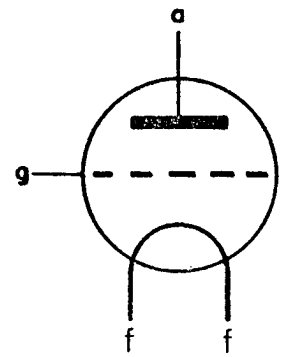

engineering TUBE DATA

Kuthe

ITT Components Division

TYPE 4C35 HYDROGEN THYRATRON

GENERAL DATA

DESCRIPTION:

The 4C35 is a unipotential cathode, three element hydrogen filled thyratron designed for network discharge service. In such service it is suitable for producing pulse outputs of more than 350 KW at an average power level of more than 400 watts.

The special features of the 4C35 include the high peak current and voltage ratings:

Electrical Data, General	**Nom.**	**Min.**	**Max.**
Heater voltage	6.3	5.7	6.6 Volts a.c.
Heater current. E_h=6.3 volts		5.5	6.7 Amperes
Minimum heating time		3 Minutes	

Mechanical Data, General

Mounting position	Any
Base	Super Jumbo 4-pin with bayonet A4-18 with ceramic insert
Anode Cap	Medium Metal, C1-5 with corona flare
Cooling	Note 1
Net Weight	8 Ounces

Dimensions

See outline drawing

Ratings

Max. peak anode voltage, forward	8.0 Kilovolts
Max. peak anode voltage, inverse (Note 2)	8.0 Kilovolts
Min. anode supply voltage	2.5 Kilovolts d.c.
Max. peak anode current	90 Amperes
Max. average anode current	100 Milliamperes
Max. RMS anode current (Note 3)	3.0 Amperes a.c.
Max. epy x ib x prr	2.0×10^9
Max. anode current rate of rise	1000 Amperes/μsecond
Peak trigger voltage	Note 4
Max. peak inverse trigger voltage	200 Volts
Max. anode delay time (Note 5)	0.60 Microsecond
Max. anode delay time drift	0.10 Microsecond
Max. time jitter (Note 6)	0.01 Microsecond (initial) 0.02 μsecond (end of life)
Ambient temperature	—50° to +90° Cent.
Shock rating	24° Navy (Flyweight) shock machine

Printed in U.S.A. 1-60

(Continued)

ITT COMPONENTS DIVISION
INTERNATIONAL TELEPHONE AND TELEGRAPH CORPORATION
P. O. BOX 412, CLIFTON, NEW JERSEY

Typical Operation as Pulse Modulator, DC Resonant Charging

Peak network voltage	8.0 Kilovolts
Pulse repetition rate	2800 Pulses/second
Pulse length	0.40 Microsecond
Pulse forming network impedance	46.0 Ohms
Trigger voltage	200 Volts
Peak power output (Resistive load 92% Zn)	330 Kilowatts
Peak anode current	89 Amperes
Average anode current	0.10 Amperes d.c.

Note 1

Cooling is permitted. However, there shall be no air blast directly on the bulb.

Note 2

In pulsed operation, the peak inverse voltage, exclusive of a spike of 0.05 microsecond maximum duration shall not exceed 2.5 KV during the first 25 microseconds after the pulse.

Note 3

The root mean square anode current shall be computed as the square root of the product of the peak current and the average current.

Note 4

The voltage between grid and cathode terminals of the socket with the tube removed should have the following characteristics:

A.	Voltage	175-250 Volts
B.	Duration	2 Microseconds (at 70% points)
C.	Source of impedance	1500 Ohms (max.)
D.	Rate of rise	200 Volts/microsecond (min.)

The limits of anode time delay and anode time jitter are based on the minimum trigger. Using the highest permissible trigger voltage and lowest trigger source impedance materially reduces these values below the limits specified.

Note 5

The time of anode delay is measured between the 26 percent point on the rising portion of the unloaded grid voltage pulse and the point at which evidence of anode conduction first appears on the loaded grid pulse.

Note 6

Time jitter is measured at the 50 percent point on the anode current pulse.

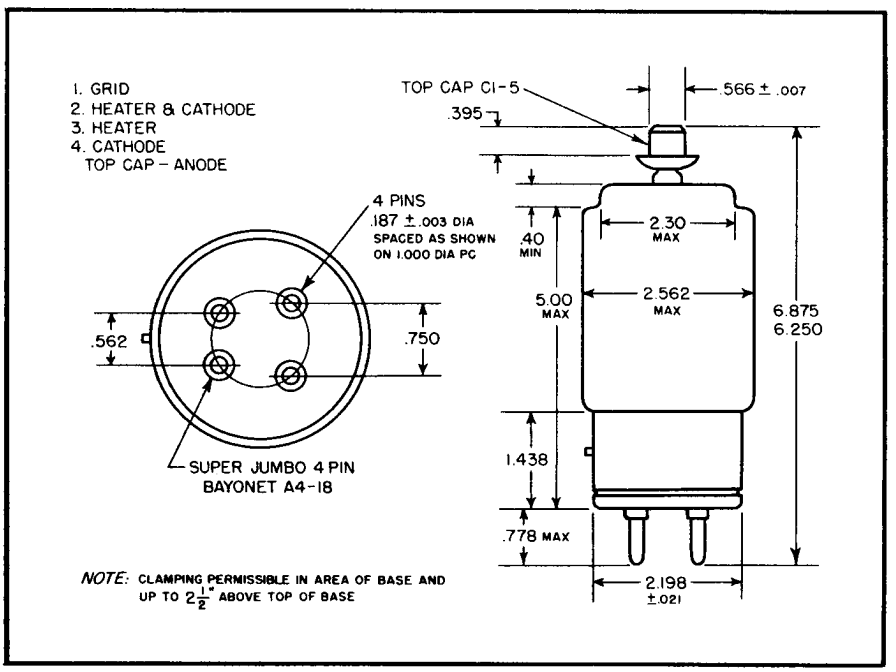

ELECTRON TUBE DEPARTMENT ■ COMPONENTS DIVISION
INTERNATIONAL TELEPHONE AND TELEGRAPH CORPORATION, CLIFTON, NEW JERSEY

KUTHE 4C35A HYDROGEN THYRATRON

DESCRIPTION:

THE 4C35A IS A UNIPOTENTIAL CATHODE, THREE ELEMENT HYDROGEN FILLED THYRATRON DESIGNED FOR NETWORK DISCHARGE SERVICE. THE SPECIAL FEATURES OF THE 4C35A ARE ITS LOW JITTER AND HIGH POWER OUTPUT. PEAK POWERS OF 350 KILOWATTS ARE REALIZED WITH THIS THYRATRON.

THE HYDROGEN RESERVOIR WITH WHICH THIS TUBE IS EQUIPPED PROVIDES A LONG STABLE OPERATING AND SHELF LIFE.

ELECTRICAL DATA, GENERAL:

	Nom.	Min.	Max.	
Heater Voltage	6.3	5.7	6.6	Volts a.c.
Heater Current (At 6.3 Volts)		5.5	6.7	Amperes
Minimum Heating Time			3	Minutes

MECHANICAL DATA, GENERAL:

Mounting Position	Any
Base	Super Jumbo 4-Pin with Bayonet A4-18 with Ceramic Insert
Anode Cap	C1-43, Medium, with Corona Shield
Cooling (Note 1)	
Net Weight	8 Ounces
Dimensions	See Outline

RATINGS:

Max. Peak Anode Voltage, Forward		8.0	Kilovolts
Max. Peak Anode Voltage, Inverse (Note 2)		8.0	Kilovolts
Min. Anode Supply Voltage		2.5	Kilovolts d.c.
Max. Peak Anode Current		90	Amperes
Max. Average Anode Current		100	Milliamperes
Max. RMS Anode Current (Note 3)		3.0	Amperes a.c.
Max. epy x ib x prr		2.0×10^9	
Max. Anode Current Rate of Rise		1000	Amperes/usecond
Peak Trigger Voltage (Note 4)			
Max. Peak Inverse Trigger Voltage		200	Volts

	Initial Limit	End of Life Limit	
Max. Anode Delay Time (Note 5)	0.6	0.7	Microsecond
Max. Anode Delay Time Drift	0.1	0.1	Microsecond
Max. Time Jitter (Note 6)	0.01	0.02	Microsecond
Ambient Temperature		-50° to $+90^\circ$	Cent.
Shock Rating		24°	Navy (Flyweight) Shock Machine

TYPICAL OPERATION AS PULSE MODULATOR, DC RESONANT CHARGING:

Peak Network Voltage	8.0	Kilovolts
Pulse Repetition Rate	2800	Pulses/Second
Pulse Length	0.40	Microsecond
Pulse Forming Network Impedance	46.9	Ohms
Trigger Voltage	200	Volts
Peak Power Output (Resistive Load 92% Zn)	330	Kilowatts
Peak Anode Current	89	Amperes
Average Anode Current	0.10	Amperes d.c.

Note 1:

Cooling permitted. However, there shall be no air blast directly on the bulb.

Note 2:

In pulsed operation, the peak inverse voltage, exclusive of spike of 0.05 microsecond maximum duration, shall not exceed 2.5 KV during the first 25 microseconds after the pulse.

Note 3:

The root mean square anode current shall be computed as the square root of the product of the peak current and the average current.

NOTE 4:

THE VOLTAGE BETWEEN GRID AND CATHODE TERMINALS OF THE SOCKET WITH THE TUBE REMOVED SHOULD HAVE THE FOLLOWING CHARACTERISTICS:

A.	VOLTAGE	175-250 VOLTS
B.	DURATION	2 MICROSECONDS (AT 70% POINTS)
C.	SOURCE OF IMPEDANCE	1500 OHMS (MAX.)
D.	RATE OF RISE	200 VOLTS/MICROSECOND

THE LIMITS OF ANODE TIME DELAY AND ANODE TIME JITTER ARE BASED ON THE MINIMUM TRIGGER. USING THE HIGHEST PERMISSIBLE TRIGGER VOLTAGE AND LOWEST TRIGGER SOURCE IMPEDANCE MATERIALLY REDUCES THESE VALUES BELOW THE LIMITS SPECIFIED.

NOTE 5:

THE TIME OF ANODE DELAY IS MEASURED BETWEEN THE 26 PERCENT POINT ON THE RISING PORTION OF THE UNLOADED GRID VOLTAGE PULSE AND THE POINT AT WHICH EVIDENCE OF ANODE CONDUCTION FIRST APPEARS ON THE LOADED GRID PULSE.

NOTE 6:

TIME JITTER IS MEASURED AT THE 50 PERCENT POINT ON THE ANODE CURRENT PULSE.

ADDITIONAL INFORMATION FOR SPECIFIC APPLICATIONS CAN BE OBTAINED FROM THE

ELECTRON TUBE APPLICATIONS SECTION
ITT COMPONENTS DIVISION
POST OFFICE BOX 412
CLIFTON, NEW JERSEY

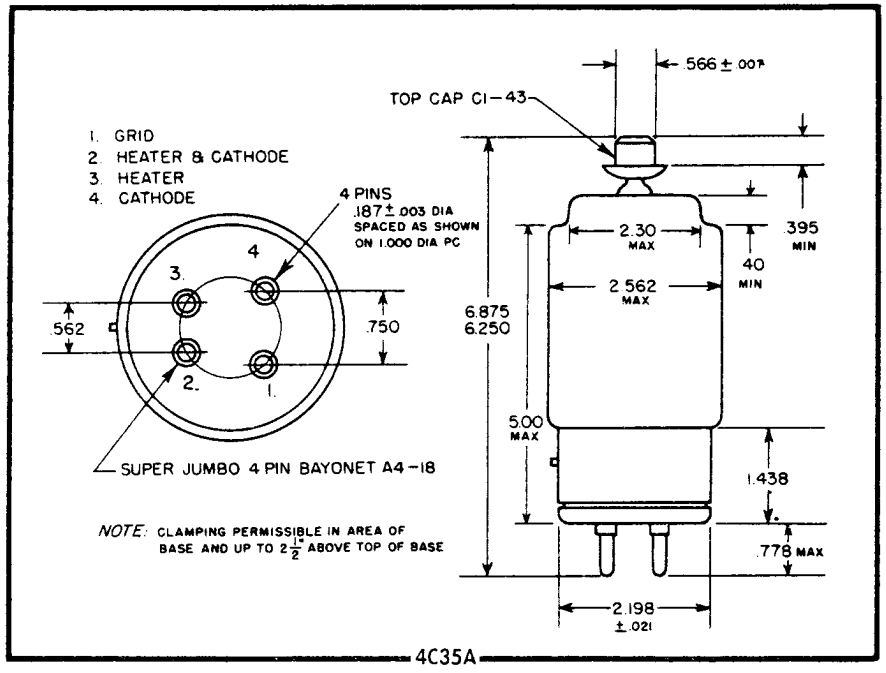
1. GRID
2. HEATER & CATHODE
3. HEATER
4. CATHODE
4 PINS
.187 ± .003 DIA
SPACED AS SHOWN
ON 1.000 DIA PC
4
3
2
1
.562
.750
SUPER JUMBO 4 PIN BAYONET A4-18
NOTE: CLAMPING PERMISSIBLE IN AREA OF BASE AND UP TO 2 1/2" ABOVE TOP OF BASE
TOP CAP C1-43
.566 ± .007
2.30 MAX
.395 MIN
.40 MIN
2.562 MAX
6.875
6.250
5.00 MAX
1.438
.778 MAX
2.198
± .021

4C35A

ELECTRON TUBE DEPARTMENT ■ COMPONENTS DIVISION
INTERNATIONAL TELEPHONE AND TELEGRAPH CORPORATION, CLIFTON, NEW JERSEY

KUTHE
5C22
HYDROGEN
THYRATRON

DESCRIPTION:

THE 5C22 IS A UNIPOTENTIAL CATHODE, THREE ELEMENT HYDROGEN FILLED THYRATRON DESIGNED FOR NETWORK DISCHARGE SERVICE. IN SUCH SERVICE, IT IS SUITABLE FOR PRODUCING PULSE OUTPUTS OF MORE THAN 2 MEGAWATTS AT AN AVERAGE POWER LEVEL OF MORE THAN 1.6 KW.

THE SPECIAL FEATURES OF THE 5C22 ARE HIGH PEAK VOLTAGE AND CURRENT RATINGS AND THE COMPACT SIZE, LOW TIME JITTER AND THE PRESENCE OF A RESERVOIR, CAPABLE OF MAINTAINING THE HYDROGEN PRESSURE THROUGHOUT THE USEFUL LIFE OF THE TUBE; AN IMPROVED AND STRONGER ENVELOPE TOP SEAL IS INCORPORATED.

ELECTRICAL DATA, GENERAL:	NOM.	MIN.	MAX.	
HEATER VOLTAGE	6.3	5.9	6.7	VOLTS A.C.
HEATER CURRENT (AT 6.3 VOLTS)		9.6	11.6	AMPERES
MINIMUM HEATING TIME			5	MINUTES

MECHANICAL DATA, GENERAL:

MOUNTING POSITION	ANY
BASE	SUPER JUMBO 4-PIN WITH BAYONET A4-18 WITH CERAMIC INSERT
ANODE CAP	C1-43, MEDIUM, WITH CORONA SHIELD
COOLING (NOTE 1)	
NET WEIGHT	12 OUNCES
DIMENSIONS	SEE OUTLINE

RATINGS:

Max. Peak Anode Voltage, Forward	16.0	Kilovolts
Max. Peak Anode Voltage, Inverse (Note 2)	16.0	Kilovolts
Min. Anode Supply Voltage	4.5	Kilovolts d.c.
Max. Peak Anode Current	325	Amperes
Max. Average Anode Current	200	Milliamperes
Max. RMS Anode Current (Note 3)	6.3	Amperes a.c.
Max. epy x ib x prr	3.2×10^9	
Max. Anode Current Rate of Rise	1500	Amperes/uSecond
Peak Trigger Voltage (Note 4)		
Max. Peak Inverse Trigger Voltage	200	Volts

	Initial Limit	End of Life Limit	
Max. Anode Delay Time (Note 5)	0.65	0.70	Microsecond
Max. Anode Delay Time Drift	0.10	0.10	Microsecond
Max. Time Jitter (Note 6)	0.005	0.01	Microsecond
Ambient Temperature		-50° to +90°	Cent.
Shock Rating		13°	Navy (Flyweight) Shock Machine

TWO TYPICAL OPERATIONS AS PULSE MODULATOR, DC RESONANT CHARGING:

Peak Network Voltage	16.0	12.0	Kilovolts
Pulse Repetition Rate	1000	500	Pulses/Second
Pulse Length	1.0	1.5	Microseconds
Pulse Forming Network Impedance	47.6	25	Ohms
Trigger Voltage	200	200	Volts
Peak Power Output (Resistive Load 92% Zn)	1.31	1.40	Megawatt
Peak Anode Current	175	250	Amperes
Average Anode Current	0.18	0.19	Amperes d.c.

Note 1:

Cooling permitted. However, there shall be no air blast directly on the bulb.

Note 2:

During the first 25 microseconds after conduction, the peak inverse anode voltage shall not exceed 5 KV.

NOTE 3:

THE ROOT MEAN SQUARE ANODE CURRENT SHALL BE COMPUTED AS THE SQUARE ROOT OF THE PRODUCT OF PEAK CURRENT AND THE AVERAGE CURRENT.

NOTE 4:

THE PULSE PRODUCED BY THE DRIVER CIRCUIT SHALL HAVE THE FOLLOWING CHARACTERISTICS WHEN VIEWED AT THE 5C22 SOCKET WITH THE TUBE DISCONNECTED:

A.	AMPLITUDE	200-300 VOLTS
B.	DURATION	2 MICROSECONDS (AT 70% POINTS)
C.	RATE OF RISE	200 VOLTS/MICROSECOND (MIN.)
D.	IMPEDANCE	50-500 OHMS

THE LIMITS OF ANODE TIME DELAY AND ANODE TIME JITTER ARE BASED ON THE MINIMUM TRIGGER. USING THE HIGHEST PERMISSIBLE TRIGGER VOLTAGE AND LOWEST TRIGGER SOURCE IMPEDANCE MATERIALLY REDUCES THESE VALUES BELOW THE LIMITS SPECIFIED.

NOTE 5:

THE TIME OF ANODE DELAY IS MEASURED BETWEEN THE 26 PERCENT POINT ON THE RISING PORTION OF THE UNLOADED GRID VOLTAGE PULSE AND THE POINT AT WHICH EVIDENCE OF ANODE CONDUCTION FIRST APPEARS ON THE LOADED GRID PULSE.

NOTE 6:

TIME JITTER IS MEASURED AT THE 50 PERCENT POINT ON THE ANODE CURRENT PULSE.

ADDITIONAL INFORMATION FOR SPECIFIC APPLICATIONS CAN BE OBTAINED FROM THE -

ELECTRON TUBE APPLICATIONS SECTION
ITT COMPONENTS DIVISION
POST OFFICE BOX 412
CLIFTON, NEW JERSEY

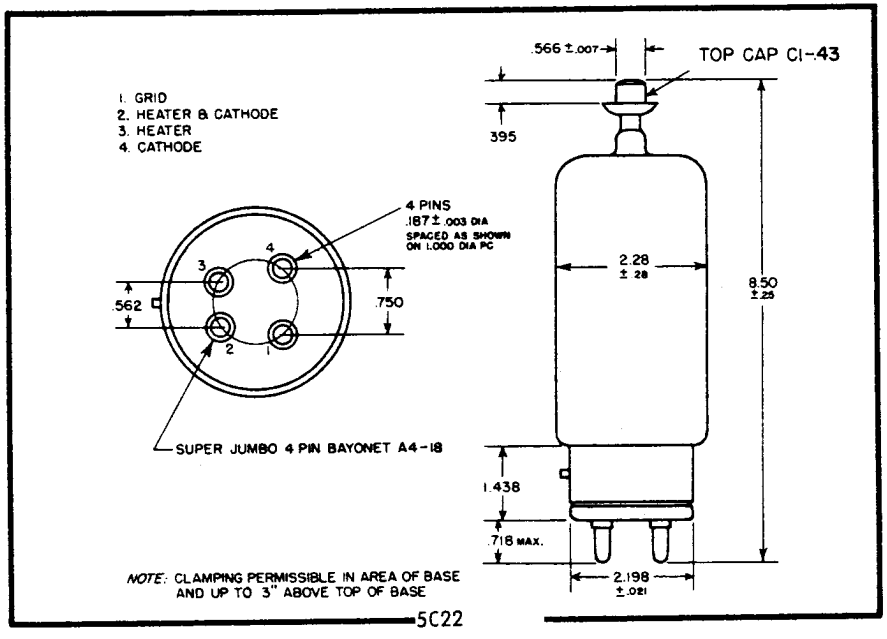
1. GRID
2. HEATER & CATHODE
3. HEATER
4. CATHODE
4 PINS
.187 ± .003 DIA
SPACED AS SHOWN
ON 1.000 DIA PC
.562
.750
SUPER JUMBO 4 PIN BAYONET A4-18
.566 ± .007
TOP CAP C1-43
.395
2.28
± .28
8.50
± .25
1.438
.718 MAX.
2.198
± .021
NOTE: CLAMPING PERMISSIBLE IN AREA OF BASE
AND UP TO 3" ABOVE TOP OF BASE
5C22

SPECIAL VALVES

Water-Cooled Industrial Triodes

PROVISIONAL DATA

Codes: 16P12
16P13
16P14

These valves are intended for use in industrial heating equipment. Their filaments are suitable for direct switching. Anode cooling is effected by an integral coil around the anode which obviates the need for a separate water jacket and provides efficient cooling with an economy in water consumption. The difference between the three types of valves is in the position and types of water connectors.

CATHODE

Directly heated thoriated tungsten

Filament voltage	8·0 (±5%)	V
Filament current—nominal	26·0	A
Maximum usable emission	6·0	A

CHARACTERISTICS

Amplification factor (At V_a = 5·0 kV, I_a = 400 mA)	24	
Mutual conductance (At V_a = 5·0 kV, I_a = 400 mA)	7·5	mA/V

DIRECT INTERELECTRODE CAPACITANCES

Grid to anode	11·5	pF
Grid to filament	14·5	pF
Anode to filament	3·8	pF

MOUNTING POSITION

Vertical—base upwards

Standard Telephones and Cables Limited

COMPONENTS GROUP
VALVE DIVISION, PAIGNTON, DEVON Tel.: Paignton 58685 Telex: 4251
LONDON SALES OFFICE, FOOTSCRAY, SIDCUP, KENT Tel.: Footscray 3333 Telex: 21836

MAXIMUM RATINGS

D.C. anode voltage (peak value of direct voltage plus ripple)	8·0	kV
Direct grid voltage	−1·0	kV
Anode dissipation	3·0	kW
Operating frequency		
Limited by water connexion	10	Mc/s
Limited by valve	40	Mc/s

TYPICAL OPERATING CONDITIONS

Anode voltage	5·0	6·0	kV
Mean anode current	1·55	1·5	A
Mean grid current	145	135	mA
Bias voltage	−250	−350	V
Bias resistor	1·75	2·6	kΩ
Peak cathode current	6·0	6·0	A
Peak anode current	5·0	5·0	A
Peak grid current	1·0	1·0	A
Anode dissipation	2·5	2·5	kW
Grid dissipation	70	65	W
Anode efficiency	69	72	%
Power output—oscillator	5·3	6·3	kW
Power output (at 85% transfer efficiency)	4·5	5·35	kW

NOTES ON TYPICAL OPERATION

The typical operating conditions given are for service as a Class C self-oscillator and are calculated for an assumed d.c. anode voltage. Where conditions of service render the valve liable to excessive mains variation, poor regulation of supplies or power supplies with a high peak to mean ratio, care should be taken to see that the limiting values are not exceeded.

Codes: 16P12
16P13
16P14

CONTINUED

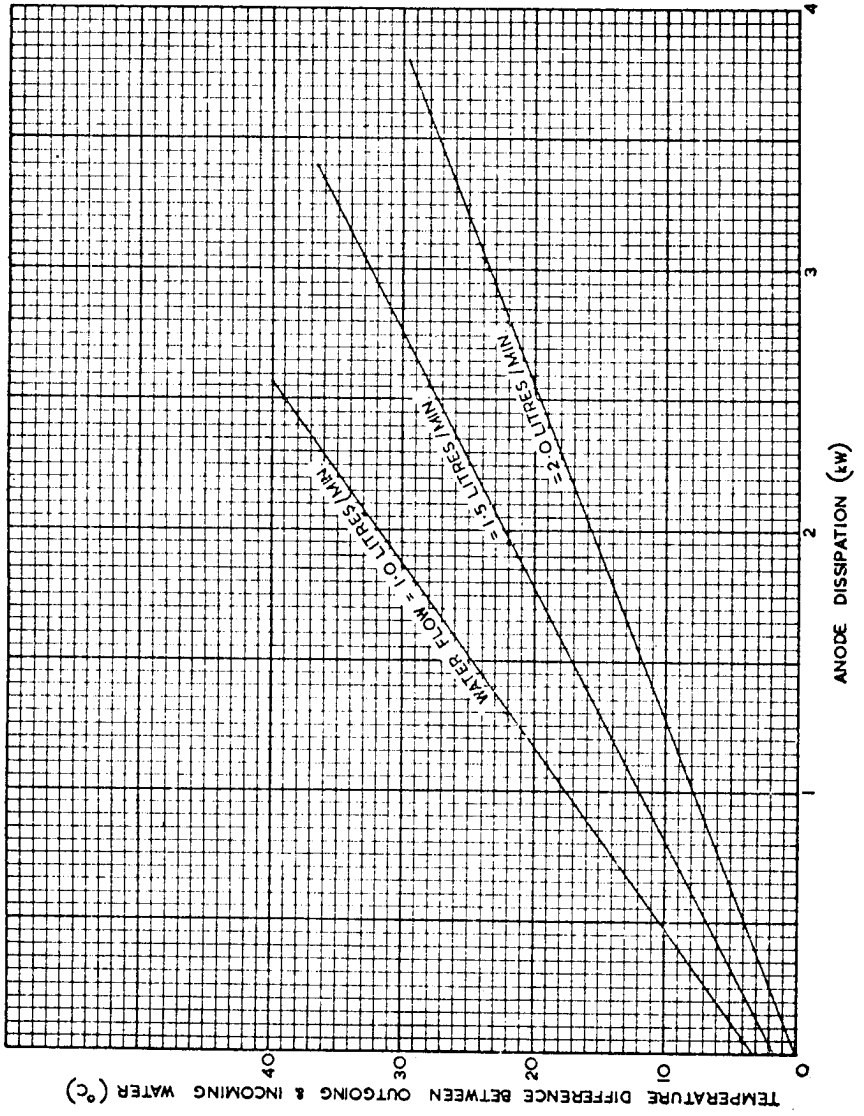

Codes: 16P12
16P13
16P14

CONTINUED

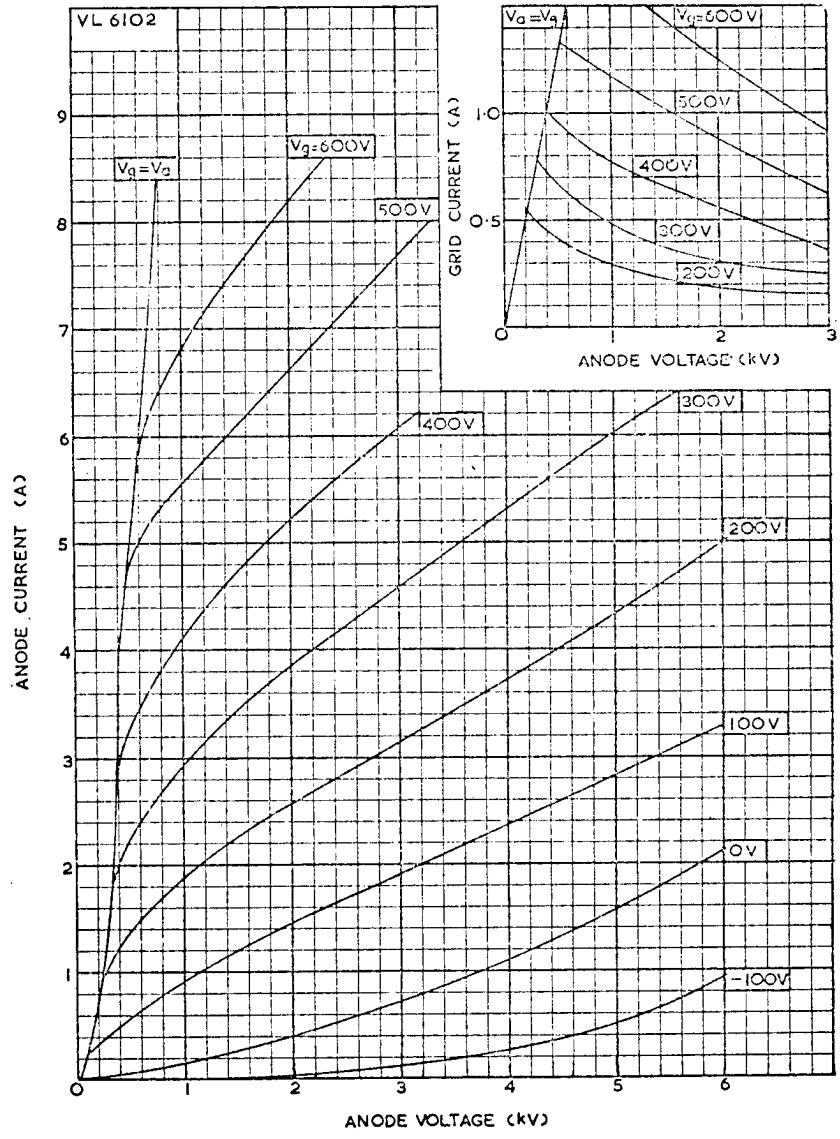

Codes: 16P12
16P13
16P14

CONTINUED

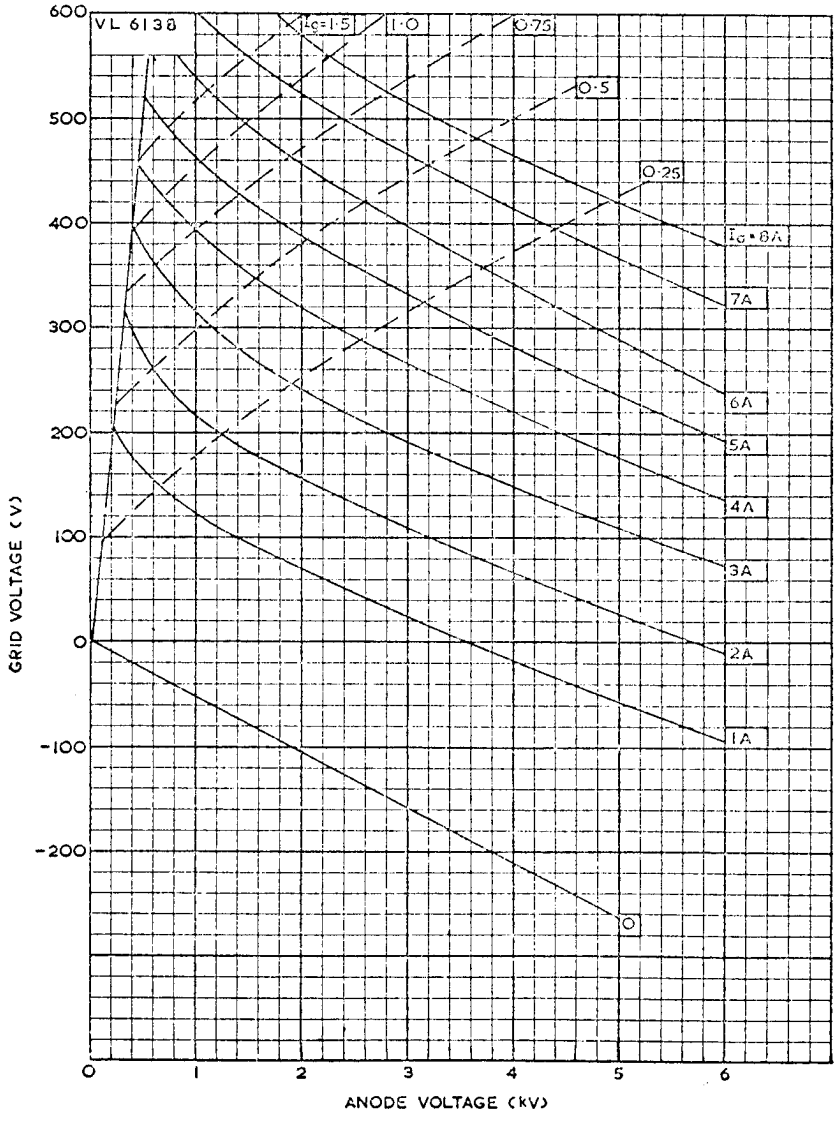

Code: 16P12

CONTINUED

16P12 Outline

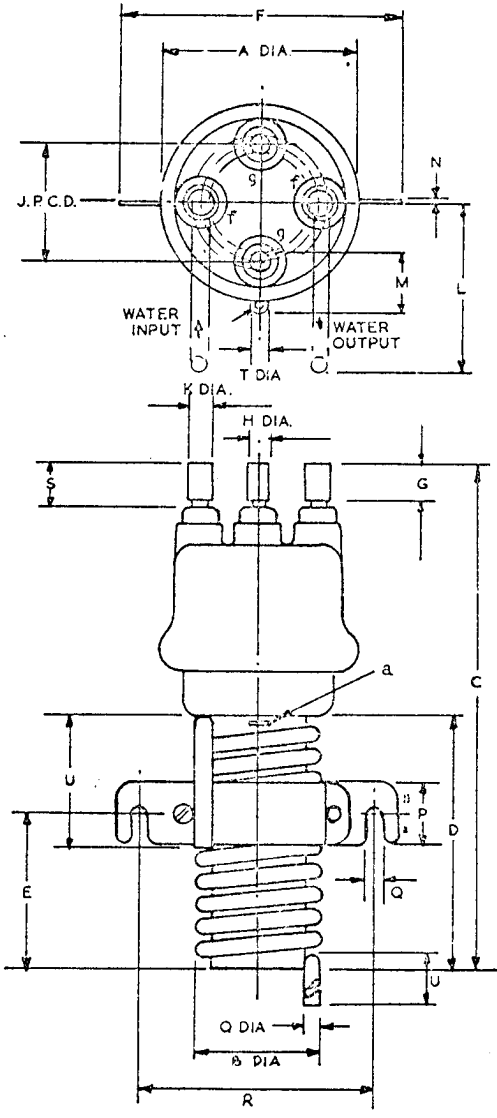

DIM.	INCHES	MILLIMETRES
A	3·150 MAX.	80,00 MAX.
B	2 1/16 MAX	52,4 MAX
C	8 3/8 MAX.	212,7 MAX.
D	4 15/64 ± 1/16	106,8 ± 1,6
E	2 1/2 ± 1/32	63,5 ± 0,8
F	4 9/16 MAX.	115,9 MAX.
G	19/32 MIN.	15,0 MIN.
H	0·312 ±0·005	7,94 ± 0,13
J	1·890 ±0·010	48,00 ± 0,25
K	0·375 ±0·005	9,53 ± 0,13
L	2 3/4 APPROX.	69,9 APPROX.
M	1 APPROX	25,4 APPROX.
N	0·064 ± 0·005	1,63 ± 0,13
P	1 ± 1/32	25,4 ± 0,8
Q	1/4 ± 1/64	6,4 ± 0,4
R	3 3/4 ± 1/32	95,3 ± 0,8
S	3/4 MAX.	19,0 MAX.
T	5/16 APPROX	7,9 APPROX
U	2 1/8 APPROX	54,0 APPROX.

BASIC DIMS. ARE INCHES

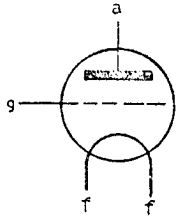

Code: 16P13

CONTINUED

16P13 Outline

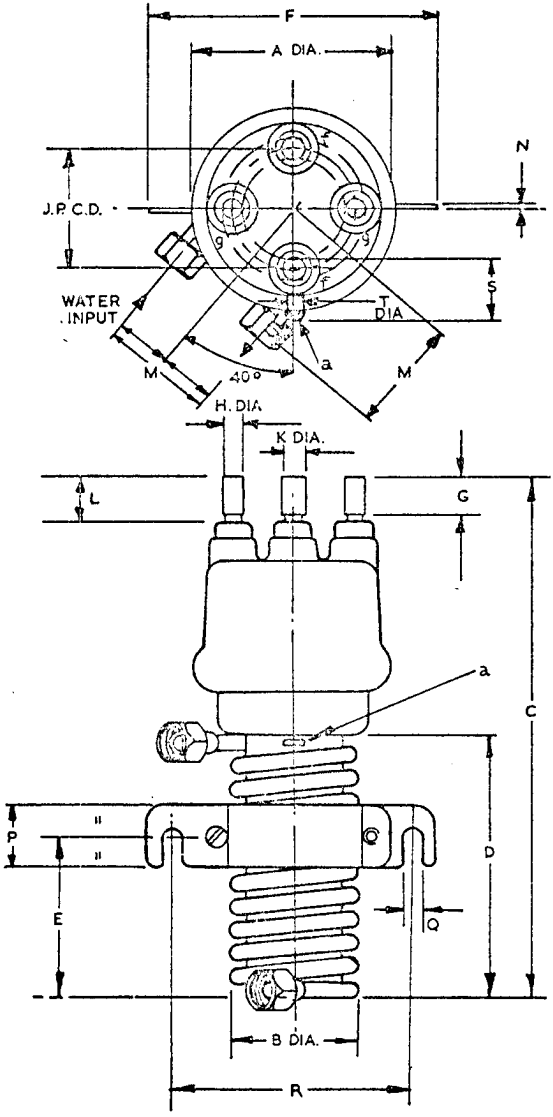

BASIC DIMS. ARE INCHES

DIM.	INCHES	MILLIMETRES
A	3·150 MAX.	80,00 MAX.
B	2 1/16 MAX.	52,4 MAX.
C	6 3/8 MAX.	212,7 MAX.
D	4 13/64 ± 1/16	106,8 ± 1,6
E	2 1/2 ± 1/32	63,5 ± 0,8
F	4 9/16 MAX.	115,9 MAX.
G	19/32 MIN.	15,0 MIN.
H	0·312 ± 0·005	7,94 ± 0,13
J	1·890 ± 0·010	48,00 ± 0,25
K	0·375 ± 0·005	9,53 ± 0,13
L	3/4 MAX.	19,0 MAX.
M	1 3/4 APPROX.	44,45 APPROX
N	0·064 ± 0·005	1,63 ± 0,13
P	1 ± 1/32	25,4 ± 0,8
Q	1/4 ± 1/64	6,4 ± 0,4
R	3 3/4 ± 1/32	95,3 ± 0,8
S	1 APPROX	25,4 APPROX
T	5/16 APPROX	7,9 APPROX

INTEGRAL WATER JACKET CONNEXIONS

ENOTS 1/4" DIA. UNION NIPPLES
REF. No. B1746D

ENOTS 1/4" BSP UNION NUTS
REF. No. B1745D

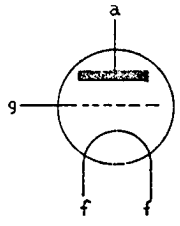

Code: 16P14

CONTINUED

16P14 Outline

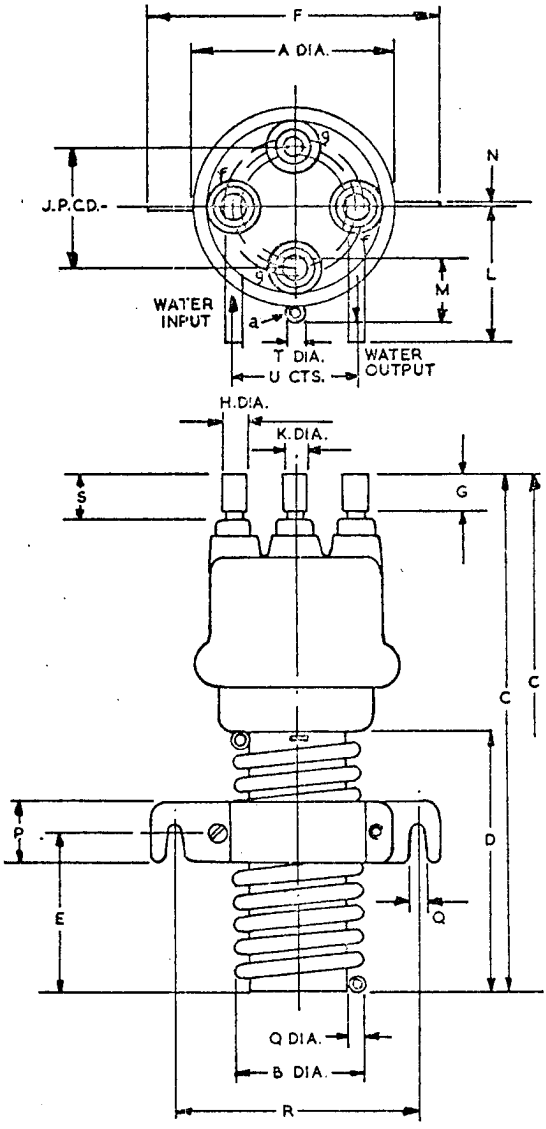

DIM.	INCHES	MILLIMETRES
A	3·150 MAX.	80,00 MAX.
B	$2\ 1/16$ MAX.	52,4 MAX.
C	$8\ 3/8$ MAX.	212,7 MAX.
D	$4\ 13/64 \pm 1/16$	106,8 ± 1,6
E	$2\ 1/2 \pm 1/32$	63,5 ± 0,8
F	$4\ 9/16$ MAX.	115,9 MAX.
G	$19/32$ MIN.	15,0 MIN.
H	0·312 ± 0·005	7,94 ± 0,13
J	1·890 ± 0·010	48,00 ± 0,25
K	0·375 ± 0·005	9,53 ± 0,13
L	$2\ 1/8 \pm 1/8$	54,0 ± 3,2
M	1 APPROX	25,4 APPROX
N	0·064 ± 0·005	1,63 ± 0,13
P	$1 \pm 1/32$	25,4 ± 0,8
Q	$1/4 \pm 1/64$	6,4 ± 0,4
R	$3\ 3/4 \pm 1/32$	95,3 ± 0,8
S	$3/4$ MAX.	19,0 MAX.
T	$5/16$ APPROX	7,9 APPROX
U	$1\ 3/4$ NOM.	44,45 NOM.

BASIC DIMS. ARE INCHES

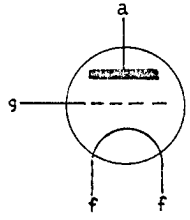

© 1965 Standard Telephones & Cables Ltd.

SPECIAL VALVES

Radiation Cooled Triode

Code: 833A (CV635)

This is a high mu triode particularly suitable for use as a r.f. power amplifier, oscillator or Class B modulator. The special construction of the valve makes it exceptionally efficient at the higher radio frequencies. It can be operated under Class C C.W. conditions with a maximum input of 1·8 kW at frequencies up to 30 Mc/s with forced-air-cooling. At reduced input ratings the valve may be operated up to 75 Mc/s.

CATHODE

Thoriated tungsten filament		
Filament voltage	10	V
Filament current	10	A
Maximum usable emission	3	A

CHARACTERISTICS

Amplification factor (At $V_g = -10V$, $I_a = 200mA$)	35	
Mutual conductance (At $V_g = -10V$, $I_a = 200mA$)	4	mA/V

DIRECT INTERELECTRODE CAPACITANCES

Grid to anode	6·3	pF
Grid to filament	12·3	pF
Anode to filament	8·5	pF

MECHANICAL DATA

Dimensions	As shown in outline drawing		
Mounting position	Vertical		
Net weight	1·5 lb	545	g

COOLING

The maximum temperature of the anode and grid seals must not exceed 145°C.

When forced-air-cooling is required, an air flow of 40ft³/min (1,13m³/min) should be directed through a 2-inch (50,8mm) nozzle on to the bulb between the anode and grid seals.

Standard Telephones and Cables Limited
Valve Division, Brixham Road, Paignton, Devon
Telephone: Paignton 50762 Telex: 4230
London Sales Office, Telephone: Footscray 3333 Telex: 21836
C O M P O N E N T S G R O U P

STC

Code: 833A (CV635)

CONTINUED.

MAXIMUM RATINGS AND TYPICAL OPERATING CONDITIONS

AUDIO FREQUENCY

Class B. A.F. Power Amplifier or Modulator
(For balanced two-valve operation)

Maximum Ratings

	Natural Cooling	Forced Cooling	
Maximum direct anode voltage	3	4	kV
Maximum direct anode current	500	500	mA
Maximum anode input power	1 125	1 600	W
Maximum anode dissipation	300	400	W

Typical Operating Conditions

Direct anode voltage	3	4	kV
Direct anode current, zero signal	2×50	2×50	mA
Direct anode current, maximum signal	2×375	2×400	mA
Direct grid voltage	−70	−100	V
A.F. grid-to-grid r.m.s. voltage	280	340	V
Effective load resistance (a-a)	9·5	12	kΩ
Drive power, maximum signal, approx.	20	29	W
Output power	1·65	2·4	kW

RADIO FREQUENCY

Class C. R.F. Power Amplifier or Oscillator. Unmodulated

Maximum Ratings

	Natural Cooling	Forced Cooling	
Maximum direct anode voltage	3	4	kV
Maximum direct anode current	500	500	mA
Maximum direct grid voltage	−500	−500	V
Maximum grid resistor	15	15	kΩ
Maximum direct grid current, approx.	100	100	mA
Maximum grid dissipation	20	20	W
Maximum anode input power	1·25	1·8	kW
Maximum anode dissipation	300	400	W

Typical Operating Conditions

Direct anode voltage	3	4	kV
Direct anode current	415	450	mA
Direct grid voltage	−200	−200	V
Grid resistor	3·6	2·65	kΩ
Direct grid current, approx*	55	75	mA
Peak r.f. grid voltage	360	375	V
Input (drive) power, approx.	20	26	W
Direct anode dissipation	245	360	W
Output power	1	1·44	kW
Power into load at 85% transfer	0·85	1·22	kW

*Subject to wide variations dependent upon impedance of the load circuit.

Code: 833A (CV635)

CONTINUED

Class C. R.F. Power Amplifier or Oscillator. Anode Modulated
(Carrier conditions per valve for use with 100% modulation)

Maximum Ratings

	Natural Cooling	Forced Cooling	
Maximum direct anode voltage	2·5	3	kV
Maximum direct anode current	400	450	mA
Maximum direct grid voltage	−500	−500	V
Maximum grid resistor	15	15	kΩ
Maximum grid dissipation	20	20	W
Maximum direct grid current, approx.	100	100	mA
Maximum anode input power	835	1 250	W
Maximum anode dissipation	200	270	W

Typical Operating Conditions

Direct anode voltage	2·5	3	kV
Direct anode current	335	415	mA
Direct grid voltage	−300	−300	V
Grid resistor	4	3·6	kΩ
Peak r.f. grid voltage	460	490	V
Direct grid current*	75	85	mA
Grid drive power, approx.	30	37	W
Anode dissipation	200	245	W
Output power	635	1 000	W
Power into load†	540	850	W

*Subject to wide variations dependent upon impedance of the load circuit.
†Transfer efficiency 85%.

STC

Code: 833A (CV635)

CONTINUED

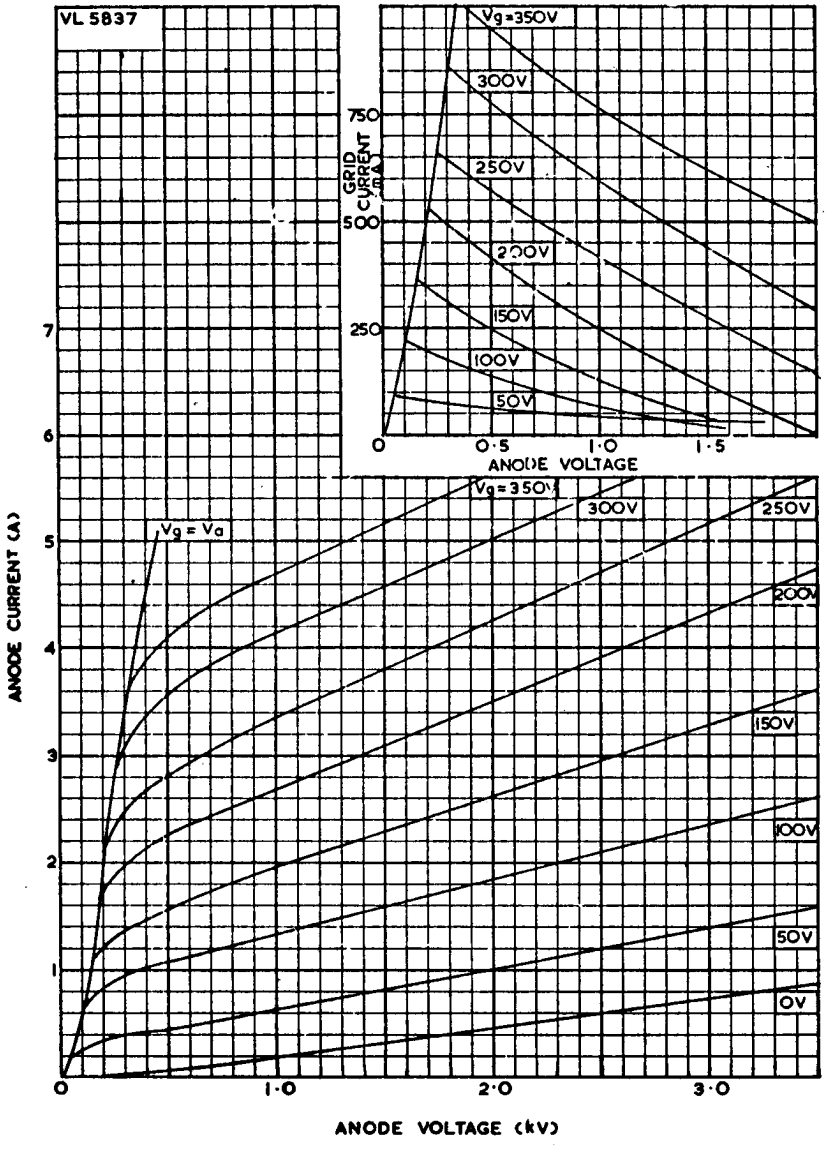

Code: 833A (CV635)

CONTINUED

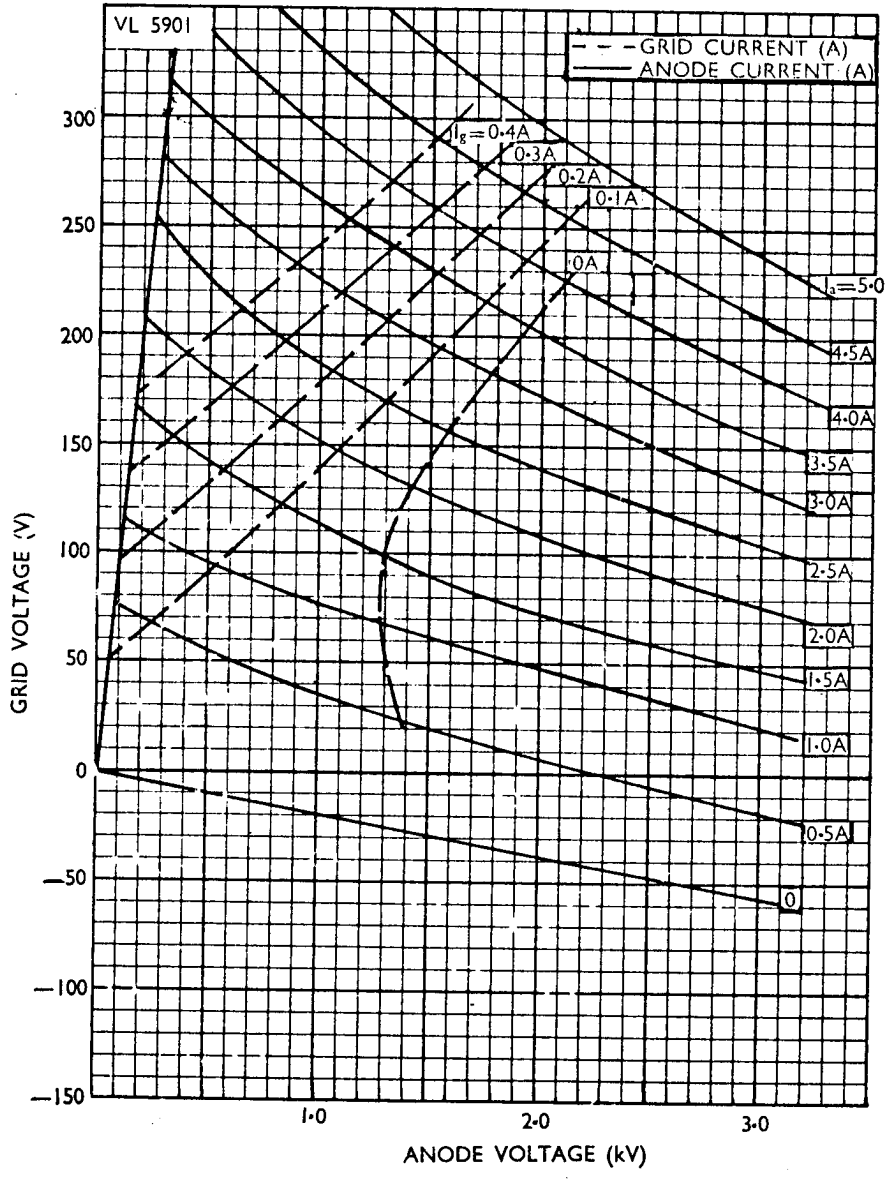

STC

Code: 833A (CV635)

CONTINUED

833A Outline

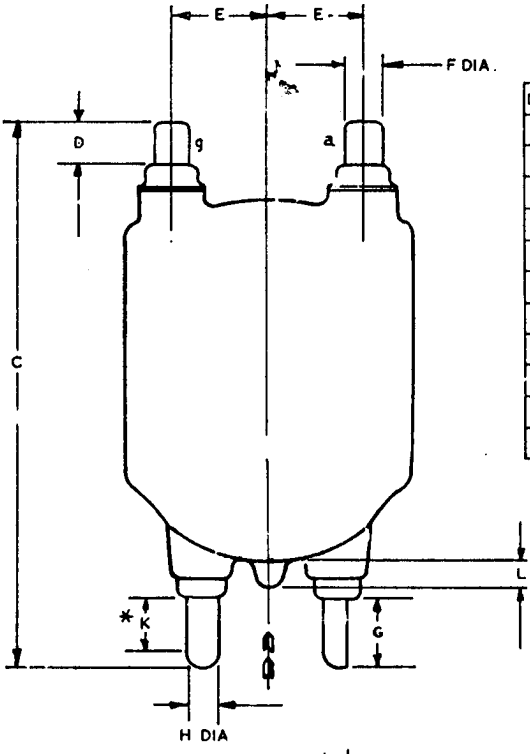

DIM.	INCHES	MILLIMETRES
A	$4\ ^{19}/_{32}$ MAX.	116,7 MAX.
B	0·375 ± 0·005	9,53 ± 0,13
C	$8\ ^{5}/_{8}$ ± $^{3}/_{16}$	219,1 ± 4,8
D	0·610 MIN.	15,49 MIN.
E	$1\ ^{1}/_{2}$ ± $^{1}/_{32}$	38,1 ± 0,8
F	0·567 ± 0·005	14,40 ± 0,13
G	$1\ ^{3}/_{32}$ ± $^{1}/_{32}$	27,8 ± 0,8
H	0·437 ± 0·005	11,11 ± 0,13
J	$2\ ^{1}/_{8}$ ± $^{1}/_{16}$	54,0 ± 1,6
K	$^{27}/_{32}$ MIN.	21,4 MIN.
L	$^{1}/_{2}$ MAX.	12,7 MAX.

BASIC DIMENSIONS ARE INCHES

* DENOTES:- CONTACT LENGTH

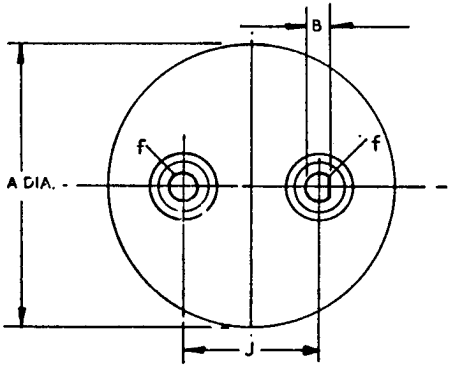

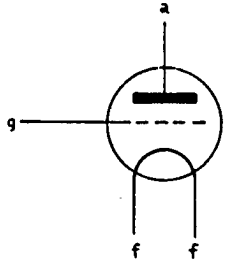

© 1967 Standard Telephones and Cables Limited

ELECTRON TUBE DEPARTMENT ■ COMPONENTS DIVISION
INTERNATIONAL TELEPHONE AND TELEGRAPH CORPORATION, CLIFTON, NEW JERSEY

KUTHE
1257
HYDROGEN
THYRATRON

DESCRIPTION:

THE 1257 IS A UNIPOTENTIAL CATHODE, THREE ELEMENT HYDROGEN FILLED THYRATRON DESIGNED FOR A NETWORK DISCHARGE SERVICE. IN SUCH SERVICE, IT IS SUITABLE FOR PRODUCING PULSE OUTPUTS OF 33 MEGAWATTS AT AN AVERAGE POWER LEVEL OF MORE THAN 40 KW.

THE SPECIAL FEATURES OF THE 1257 INCLUDE AN INTERNAL HYDROGEN-RESERVOIR CAPABLE OF PRODUCING A WIDE RANGE OF HYDROGEN PRESSURE AND MAINTAINING THIS PRESSURE AT THE DESIRED VALUE THROUGHOUT ITS USEFUL LIFE.

ELECTRICAL DATA, GENERAL:	NOM.	MIN.	MAX.		
HEATER VOLTAGE	6.3	6.0	6.6		VOLTS A.C.
HEATER CURRENT (AT 6.3 VOLTS)		20.0	40.0		AMPERES
HEATER (NOTE 1)					
RESERVOIR VOLTAGE (NOTE 2)		3.5	6.0		VOLTS
RESERVOIR CURRENT AT 4.5 VOLTS		3.0	8.0		AMPERES
MINIMUM HEATING TIME				15	MINUTES

MECHANICAL DATA, GENERAL:

MOUNTING POSITION	VERTICAL ONLY,	BASE DOWN
BASE		PER OUTLINE
ANODE CAP		PER OUTLINE
COOLING (NOTE 3)		
NET WEIGHT	10	POUNDS
DIMENSIONS		SEE OUTLINE

RATINGS:

Max. Peak Anode Voltage, Forward	33.0	Kilovolts
Max. Peak Anode Voltage, Inverse (Note 4)	33.0	Kilovolts
Min. Anode Supply Voltage	3.5	Kilovolts d.c.
Max. Peak Anode Current	2000	Amperes
Max. Average Anode Current	2.6	Amperes
Max. RMS Anode Current (Note 5)	60	Amperes a.c.
Max. epy x ib x prr	20 X 109	
Max. Anode Current Rate of Rise	10,000	Amperes/μSecond
Peak Trigger Voltage (Note 6)		
Max. Peak Inverse Trigger Voltage	650	Volts
Max. Anode Dealy Time (Note 7)	1.0	Microsecond
Max. Anode Delay Time Drift	0.10	Microsecond
Max. Time Jitter (Note 8)	0.01	Microsecond (initial)
	0.02	μSecond (end of life)
Ambient Temperature	-55° to +75°	Cent.

TYPICAL OPERATION AS PULSE MODULATOR, DC RESONANT CHARGING:

Peak Network Voltage	33.0	20.0	Kilovolts
Pulse Repetition Rate	310	1500	Pulses/sec.
Pulse Length	2.5	1.3	Microsecond
Pulse Forming Network Impedance	8.6	15.6	Ohms
Trigger Voltage	1500	1500	Volts
Peak Power Output (Resistive Load 92% Zn)	31	6.2	Megawatt
Peak Anode Current	2000	667	Amperes
Average Anode Current	1.55	1.3	Amperes d.c.

Note 1:

Cathode connected to center of cathode heater.

Note 2:

Reservoir voltage is marked on the base of each VC-1257. This is the correct voltage for one typical operating condition but is not the optimum value for all types of operation. This value may be used initially in new applications and the optimum value may then be obtained by exploring the range of voltage on either side of that marked on the tube. Excess reservoir voltage will result in a failure of the thyratron to deionize between pulses (continuous conduction). Insufficient reservoir voltage will result in excess anode dissipation as indicated by visible heating of the anode. The optimum reservoir voltage is the midpoint between these two extremes. In certain applications it may be necessary to provide a regulated source to assure operation within the permissible range of reservoir voltages. Consult manufacturer for starting program if necessary.

NOTE 3:

COOLING OF THE ANODE LEAD IS PERMISSIBLE, BUT THERE SHALL BE NO AIR BLAST DIRECTLY ON THE BULB.

NOTE 4:

DURING THE FIRST 25 MICROSECONDS AFTER CONDUCTION, THE PEAK INVERSE ANODE VOLTAGE SHALL NOT EXCEED 5 KV.

NOTE 5:

THE ROOT MEAN SQUARE ANODE CURRENT SHALL BE COMPUTED AS THE SQUARE ROOT OF THE PRODUCT OF PEAK CURRENT AND THE AVERAGE CURRENT.

NOTE 6:

THE PULSE PRODUCED BY THE DRIVER CIRCUIT SHALL HAVE THE FOLLOWING CHARACTERISTICS WHEN VIEWED AT THE 1257 SOCKET WITH THE TUBE REMOVED.

A.	AMPLITUDE	1300-2500 VOLTS
B.	DURATION	2 MICROSECONDS (AT 70% POINTS)
C.	TIME OF RISE	0.35 MICROSECONDS (MIN.)
D.	IMPEDANCE	10-25 OHMS

THE LIMITS OF ANODE TIME DELAY AND ANODE TIME JITTER ARE BASED ON THE MINIMUM TRIGGER. USING THE HIGHEST PERMISSIBLE TRIGGER VOLTAGE AND LOWEST TRIGGER SOURCE IMPEDANCE MATERIALLY REDUCES THESE VALUES BELOW THE LIMITS SPECIFIED.

NOTE 7:

THE TIME OF ANODE DELAY IS MEASURED BETWEEN THE 26 PERCENT POINT ON THE RISING PORTION OF THE UNLOADED GRID VOLTAGE PULSE AND THE POINT AT WHICH ANODE CONDUCTION FIRST EVIDENCES ITSELF ON THE LOADED GRID PULSE.

NOTE 8:

TIME JITTER IS MEASURED AT THE 50 PERCENT POINT ON THE ANODE CURRENT PULSE.

ADDITIONAL INFORMATION FOR SPECIFIC APPLICATIONS CAN BE OBTAINED FROM THE

ELECTRON TUBE APPLICATIONS SECTION
ITT COMPONENTS DIVISION - P.O. BOX 412
CLIFTON, NEW JERSEY

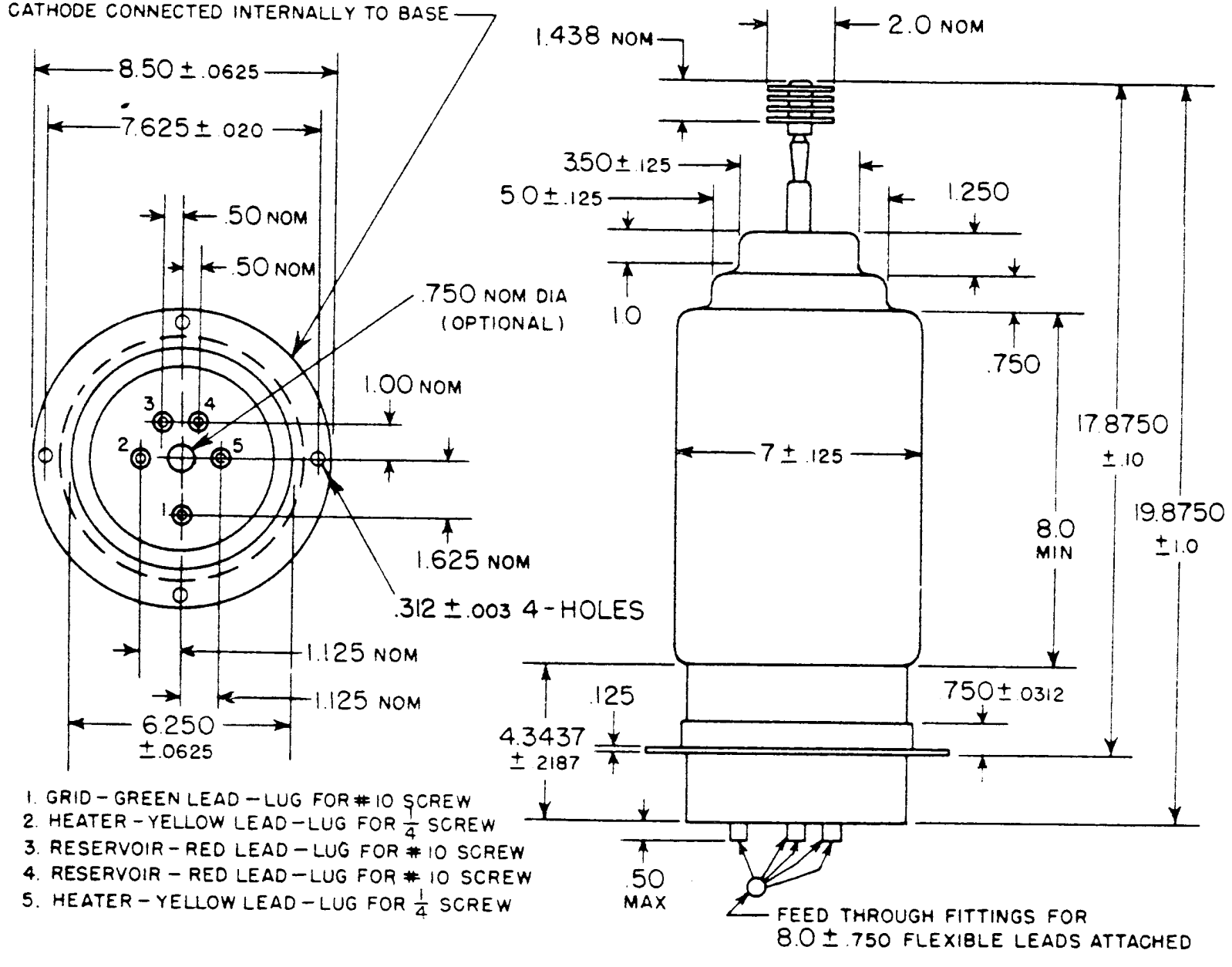
CATHODE CONNECTED INTERNALLY TO BASE
8.50 ± .0625
7.625 ± .020
.50 NOM
.50 NOM
.750 NOM DIA (OPTIONAL)
1.00 NOM
1.625 NOM
.312 ± .003 4-HOLES
1.125 NOM
1.125 NOM
6.250 ± .0625
1.438 NOM
2.0 NOM
3.50 ± .125
5.0 ± .125
1.0
1.250
.750
17.8750 ± .10
19.8750 ± 1.0
7 ± .125
8.0 MIN
.125
4.3437 ± .2187
.750 ± .0312
.50 MAX
FEED THROUGH FITTINGS FOR 8.0 ± .750 FLEXIBLE LEADS ATTACHED
1. GRID – GREEN LEAD – LUG FOR # 10 SCREW
2. HEATER – YELLOW LEAD – LUG FOR 1/4 SCREW
3. RESERVOIR – RED LEAD – LUG FOR # 10 SCREW
4. RESERVOIR – RED LEAD – LUG FOR # 10 SCREW
5. HEATER – YELLOW LEAD – LUG FOR 1/4 SCREW

ELECTRON TUBE DIVISION
P.O. Box 100
Easton, Pennsylvania 18042
Telephone 215 252-7331

2099

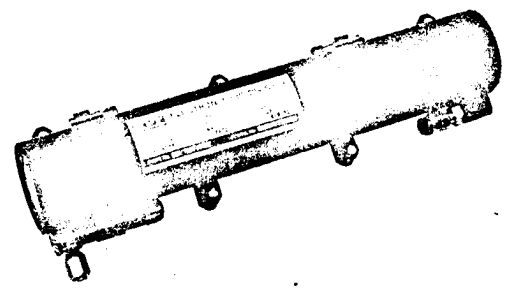

TRAVELING WAVE TUBE

DESCRIPTION

The tube type 2099 is a 1 kilowatt grid pulsed traveling wave amplifier having a minimum gain of 28 db over the frequency range of 4.0 to 8.0 GHz. The tube is a helix type TWT, PPM focused and of metal ceramic designed for rugged environmental applications. The tube is liquid cooled and may be mounted in any position. The maximum operating duty cycle is 4 percent at a maximum pulse width of 30 microseconds. The 2099 has type TNC coaxial RF connectors and operates normally with collector voltage depression.

RF PERFORMANCE

	Typical Values	Performance Limits
Frequency	4.0-8.0 GHz	4.0-8.0 GHz
Pk Power Output	1500 Watts	1000 Watts Min.
Gain at 1.0 KW Pk Pwr (Note 2)	30 db	28 db Min.
Small Signal Gain (Note 3)	36 db	34 db Min.
Duty Cycle	.04	.04

ELECTRICAL REQUIREMENTS

	Typical Values	Performance Limits Min.	Max.	Units
Cathode Voltage	—9.75	—9.25	—9.75	KV
Cathode Current	1.7		1.8	Amp Pk
Heater Volts	6.15	6.0	6.3	Volts
Heater Current	3.1	2.4	3.5	Amp
Grid Bias Voltage (Notes 1, 2)	—150	—150	—250	Volts
Grid Pulse Voltage (Note 1)	150	100	200	Volts
Grid to Anode	15		20	uuf
Grid to Cathode	17		25	uuf
Grid Current	.300		.400	Amp Pk
Collector Voltage (Note 1)	6.4	5.7	6.9	KV

MECHANICAL

RF Connections	TNC
DC Connections	Individual Socket Type
Coolant Connections	Parker-Hannifin No. 4F5X
Cooling	Coolanol 35—1 gal/min
Weight w/o Oil	10 lbs.
Mounting Position	Any
Construction	Metal-Ceramic
Focusing	PPM

ENVIRONMENTAL

Shock	15G, 5½ millisec pulse
Vibration	As per MIL-T-5422, Part 1 Para. 4.2
Operating Temperature	—40°C to +90°C
Non-Operating Temperature	—60°C to +120°C
Altitude	Any

NOTE 1. Voltages with respect to cathode.
NOTE 2. High voltage must NOT be applied in the absence of proper Grid Bias.
NOTE 3. Modified tubes with small signal and power gains flat to within ±2 db can be provided upon special request.

2099

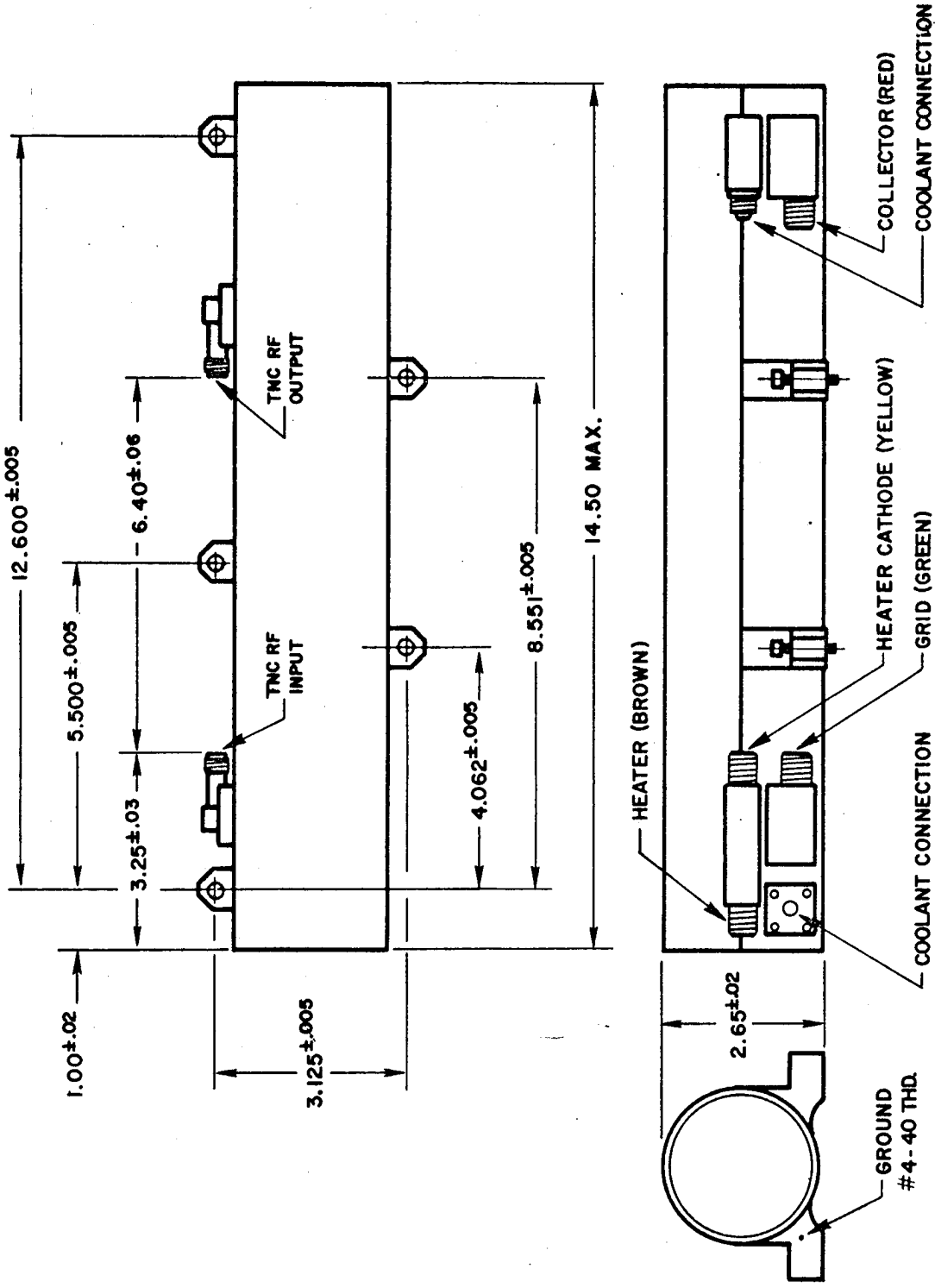

Sales Manager,
Valve Div.,
Brixham Rd.,
Paignton, Devon.

12/71

ELECTRON TUBE DIVISION ITT
Box 100, Easton, Pennsylvania 18042 Telephone (215) 252-7331

FORCED AIR COOLED V.H.F. POWER TRIODE
Code: 5924

The 5924 is intended for use as a v.h.f. amplifier, in which application it is particularly suitable for handling television signals; or as an a.f. amplifier. It may be used at frequencies up to 220MHz.

CATHODE

Thoriated tungsten filament

Filament voltage (Note 1)	12,6	V
Filament current, nominal	33	A

The connection to the filament mid-point is intended for cathode connection but should not be used to carry filament current. At frequencies above 30MHz the filament pins should be decoupled to the centre tap with suitable capacitors.

Note 1. The filament has been designed to tolerate temporary fluctuations of supply voltage of +5% to -10%.

CHARACTERISTICS

Mutual conductance	(Measured at V_a = 4kV, I_a = 1A)	17	mA/V
Amplification factor		32	

DIRECT INTERELECTRODE CAPACITANCES

Grid to anode	11	pF
Grid to filament	16	pF
Anode to filament	0,3	pF

MECHANICAL DATA

Dimensions	As shown in outline drawing, Figure 5.
Mounting position	Vertical, anode upwards or downwards.

November 1969

3J/188E-1

ITT Components Group Europe
Standard Telephones and Cables Limited
Valve Product Division, Brixham Road, Paignton, Devon
Telephone: Paignton 50762 (STD Code 0803) Telex: 42830

ITT COMPONENTS

© International Telephone and Telegraph Corporation.
All rights reserved.

MAXIMUM RATINGS AND TYPICAL OPERATING CONDITIONS

CLASS C. AMPLIFIER FOR TELEVISION SERVICE - GRID MODULATED
(Negative modulation, synch. positive)
Maximum Ratings

	Up to 75MHz	Up to 220MHz	
Direct anode voltage	5	4	kV
Direct anode current	1,9	1,6	A
Direct anode dissipation	5	4	kW
Direct grid dissipation	120	120	W
Negative grid bias	1	1	kV
Peak cathode current	10	8,1	A
Input power, average	9,5	6,5	kW

Typical Operating Conditions (2 tubes in push-pull)

	Up to 75MHz	Up to 220MHz	
Bandwidth			
-1,5dB	5,25	6,5	MHz
-3dB	8	10	MHz
Direct anode voltage	5	4	kV
Grid voltage			
synch.	-200	-150	V
black	-300	-225	V
white	-550	-500	V
Anode current			
synch.	2 x 1,9	2 x 1,6	A
black	2 x 1,3	2 x 1,3	A
R.F. input voltage (grid-to-grid peak)	1	1	kV
Grid current			
synch.	2 x 250	2 x 200	mA
black	2 x 175	2 x 110	mA
Power output, synch.	9	6	kW
Power in load, synch.	6,3	4,2	kW
Drive power	250	350 to 450	W

CLASS C. AMPLIFIER FOR TELEVISION SERVICE - GRID MODULATED
(Positive modulation, synch. negative)

Maximum Ratings		
Direct anode voltage	5	kV
Direct anode current	1,9	A
Direct anode dissipation	5	kW
Direct grid dissipation	120	W
Negative grid bias	1	kV
Peak cathode current	10	A
Input power, average	9,5	kW
Frequency for above ratings	75	MHz
Typical Operating Conditions (2 tubes in push-pull)		
Frequency	Up to 75	MHz
Bandwidth		
-1,5dB	5,25	MHz
-3dB	8	MHz
Direct anode voltage	5	kV
Grid voltage		
synch.	-580	V
black	-460	V
white	-200	V
Anode current		
white	2 x 1,9	A
black	2 x 400	mA
R.F. input voltage, grid-to-grid peak	1	kV
Grid current		
white	2 x 250	mA
black	0	mA
Power output, white	9	kW
Power in load, white	6,3	kW
Drive power	250	W

CLASS B. LINEAR POWER AMPLIFIER FOR TELEVISION SERVICE
Applied signal to be negatively modulated (synch. positive)

Maximum Ratings

	Up to 75MHz	Up to 220MHz	
Direct anode voltage	5	4	kV
Direct anode current	1,9	1,6	A
Direct anode dissipation	5	4	kW
Direct grid dissipation	120	120	W
Negative grid bias	1	1	kV
Peak cathode current	10	8,1	A
Input power, average d.c.	9,5	6,5	kW

Typical Operating Conditions (2 tubes in push-pull)

	Up to 75MHz	Up to 220MHz	
Bandwidth			
-1,5dB	5,25	6,5	MHz
-3dB	8	10	MHz
Direct anode voltage	5	4	kV
Direct grid voltage	-200	-150	V
Anode current			
synch.	2 x 1,9	2 x 1,6	A
black	2 x 1,5	2 x 1,3	A
white	2 x 100	2 x 100	mA
R.F. input voltage, grid-to-grid peak			
synch.	1	1	kV
black	800	750	V
white	250	200	V
Grid current			
synch.	2 x 250	2 x 200	mA
black	2 x 110	2 x 110	mA
white	0	0	mA
Power output, synch.	9	6	kW
Power in load, synch.	6,3	4,2	kW
Drive power, synch.	250	350 to 450	W

CLASS C. R.F. POWER AMPLIFIER. TELEGRAPHY OR F.M. TELEPHONY

Maximum Ratings

Direct anode voltage	6	kV
Direct anode current	1,5	A
Direct anode dissipation	5	kW
Direct grid dissipation	120	W
Direct grid current	350	mA
Negative grid bias	1	kV
Peak cathode current	8,5	A
Frequency for above ratings	75	MHz

Typical Operating Conditions (Frequency 75MHz)

Direct anode voltage	4	5	6	kV
Direct grid voltage	-200	-300	-400	V
Direct anode current	1,37	1,5	1,5	A
Peak r.f. grid voltage	500	640	740	V
Direct grid current	350	330	310	mA
Anode dissipation	1,5	1,9	2,1	kW
Efficiency	73	75	77	%
Power output	4	5,6	6,9	kW
Power into load	3,2	4,5	5,5	kW
Drive power	190	240	275	W

Typical Operating Conditions (2 tubes in grounded-grid push-pull)

Frequency	75	110	110	220	MHz
Direct anode voltage	6	4	5	4	kV
Direct cathode voltage	400	200	300	200	V
Direct anode current	2 x 1,5	2 x 1,37	2 x 1,5	2 x 1,25	A
Peak r.f. input voltage (f-f)	1,48	1	1,28	0,9	kV
Direct grid current	2 x 310	2 x 350	2 x 330	2 x 200	mA
Anode dissipation	2 x 2,1	2 x 1,7	2 x 2,2	2 x 2,5	kW
Efficiency	77	69	71	50	%
Power output(Note 2)	15,62(1,82)	8,6(1,0)	12,06(1,46)	5,6(0,6)	kW
Power into load	12,5	6,9	9,6	4,5	kW
Drive power	2,38	1,41	1,93	1,79	kW

Note 2. Figures in brackets denote power transferred through from the driver.

CLASS C. TELEPHONY (Carrier conditions for use with 100% anode modulation)

Maximum Ratings		
Direct anode voltage	5	kV
Direct anode current	1,3	A
Direct anode dissipation	3,4	kW
Direct grid dissipation	120	W
Direct grid current	350	mA
Negative grid bias	1	kV
Peak cathode current	7,5	A
Frequency for above ratings	75	MHz

Typical Operating Conditions (Frequency 75MHz, carrier only)

Direct anode voltage	3	3,5	4	4,5	5	kV
Direct grid voltage	-250	-300	-300	-350	-400	V
Direct anode current	1	1,2	1,2	1,2	1,2	A
Peak r.f. grid voltage	510	600	600	650	690	V
Direct grid current	300	300	300	300	300	mA
Anode dissipation	0,8	1,2	1,3	1,3	1,3	kW
Efficiency	73	72	73	76	78	%
Power output	2,2	3	3,5	4,1	4,7	kW
Power into load at 80% transfer efficiency	1,76	2,4	2,8	3,3	3,75	kW
Drive power	170	205	205	230	205	W
Modulation power for 100% modulation depth	1,5	2,1	2,4	2,7	3	kW

CLASS B. LINEAR R.F. AMPLIFIER (Applied signal to be 100% modulated. Carrier conditions listed)

Maximum Ratings		
Direct anode voltage	6	kV
Direct anode current	1,1	A
Direct anode dissipation	5	kW
Direct grid dissipation	120	W
Direct grid current	350	mA
Negative grid bias	1	kV
Peak cathode current	4,6	A
Frequency for above ratings	75	MHz

CLASS B. LINEAR R.F. AMPLIFIER (continued)

Typical Operating Conditions (Frequency 75MHz)			
Direct anode voltage	5	6	kV
Direct grid voltage	-145	-180	V
Direct anode current	900	990	mA
Peak r.f. grid voltage	225	250	V
Anode dissipation	3	4	kW
Efficiency	32	32	%
Power output	1,45	1,9	kW
Power into load for 100% modulation	1,16	1,52	kW
Drive power	160	170	W
Direct grid current	320	300	mA

CLASS B. A.F. AMPLIFIER (for balanced 2-tube operation)

Maximum Ratings (per tube)		
Direct anode voltage	6	kV
Direct anode current	1,5	A
Direct anode dissipation	5	kW
Direct grid dissipation	120	W
Direct grid current	350	mA
Peak cathode current	5,7	A
Grid-to-filament resistance	15	kΩ

Typical Operating Conditions (2 tubes in push-pull)							
Direct anode voltage	3	3,5	4	4,5	5	6	kV
Direct grid voltage	-90	-106	-112	-125	-138	-165	V
Direct grid current	2x200	2x180	2x190	2x90	2x140	2x280	mA
Direct anode current							
zero signal	2x65	2x75	2x100	2x100	2x110	2x125	mA
max. signal	2x800	2x950	2x940	2x920	2x910	2x1 500	mA
Peak grid-to-grid voltage	400	440	450	465	470	645	V
Anode dissipation	2x0,75	2x1,0	2x1,1	2x1,15	2x1,25	2x2,35	kW
Efficiency	69	70	71	72	73	74	%
Power output	3,3	4,6	5,3	6	6,6	13,3	kW
Drive power	104	100	108	54	84	230	W
Anode-to-anode resistance	4,4	4,2	4,9	6,1	6,4	4,9	kΩ
Total distortion	3,3	2,9	2,6	3,7	3,3	4,3	%

COOLING REQUIREMENTS

The tube must not be operated without a heat dissipating connector or the filament mid-point pin.

Maximum filament seal temperature	210°C
Maximum anode and grid seal temperature	180°C

In order to keep within the temperature limits, it may be necessary to direct a flow of air on to the filament and grid seals.

The amount of forced-air-cooling required by the 5924 tube depends upon its height above sea level, the ambient air temperature and the anode dissipation. Typical data are given in the following table:

Anode dissipation	Height above sea level		Max. inlet temperature	Min. rate of air flow		Pressure drop between inlet and outlet	
(kW)	(m)	(ft)	(°C)	m^3/min.	ft^3/min.	mm. water	in. water
1	0	0	35	3	105	8	0,32
1	0	0	45	3,1	110	8	0,32
1	1 500	4 920	35	3,7	130	9	0,35
1	3 000	9 840	25	4,1	145	10	0,39
3	0	0	35	5,2	185	23	0,9
3	0	0	45	6,1	215	29	1,14
3	1 500	4 920	35	6,2	220	26	1,02
3	3 000	9 840	25	6,6	235	26	1,02
5	0	0	35	9,2	325	68	2,7
5	0	0	45	10,7	380	90	3,5
5	1 500	4 920	35	11,2	395	81	3,2
5	3 000	9 840	25	11,6	410	71	2,8

Fig. 1. Typical Anode and Grid Characteristics

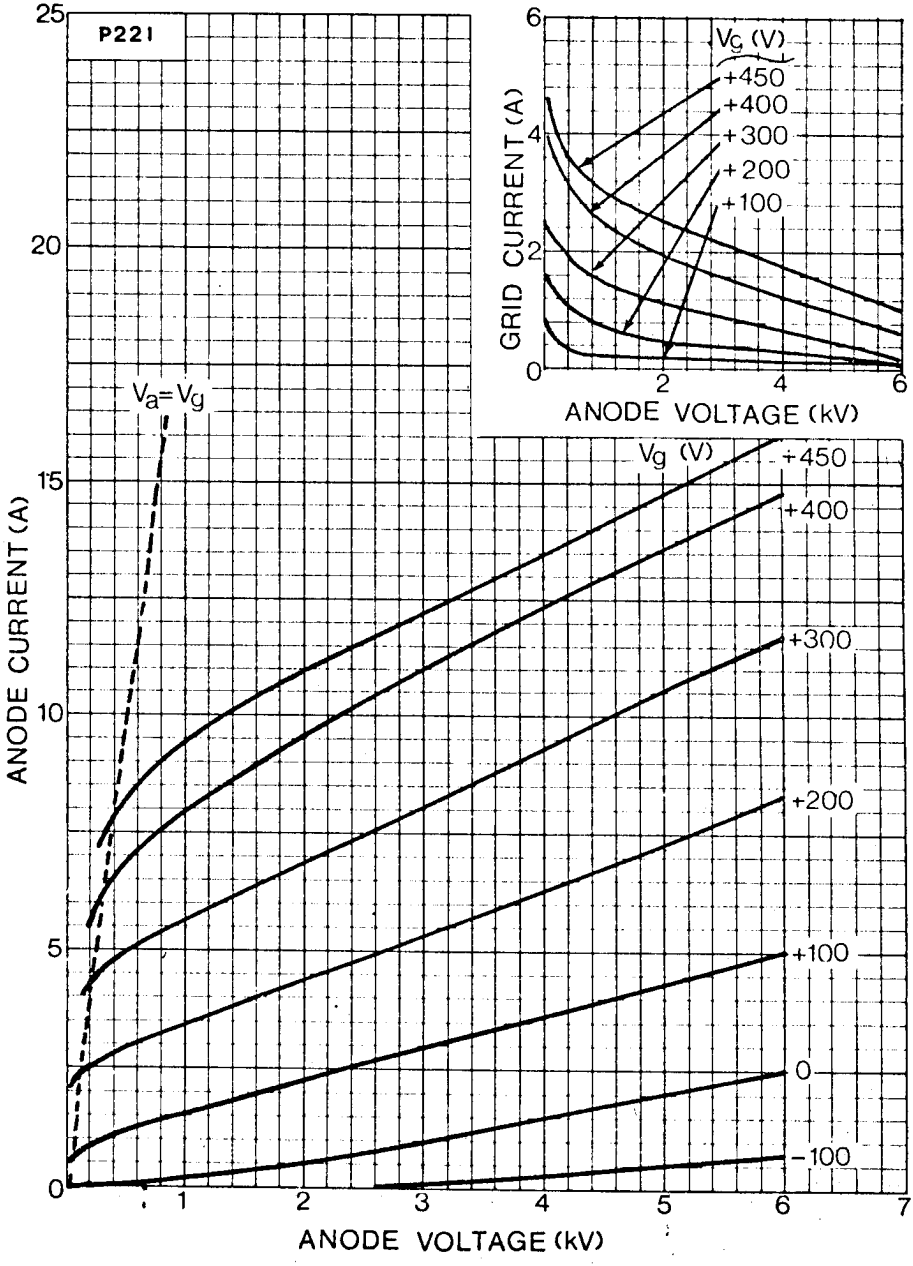

Fig. 2. Typical Constant Current Characteristics

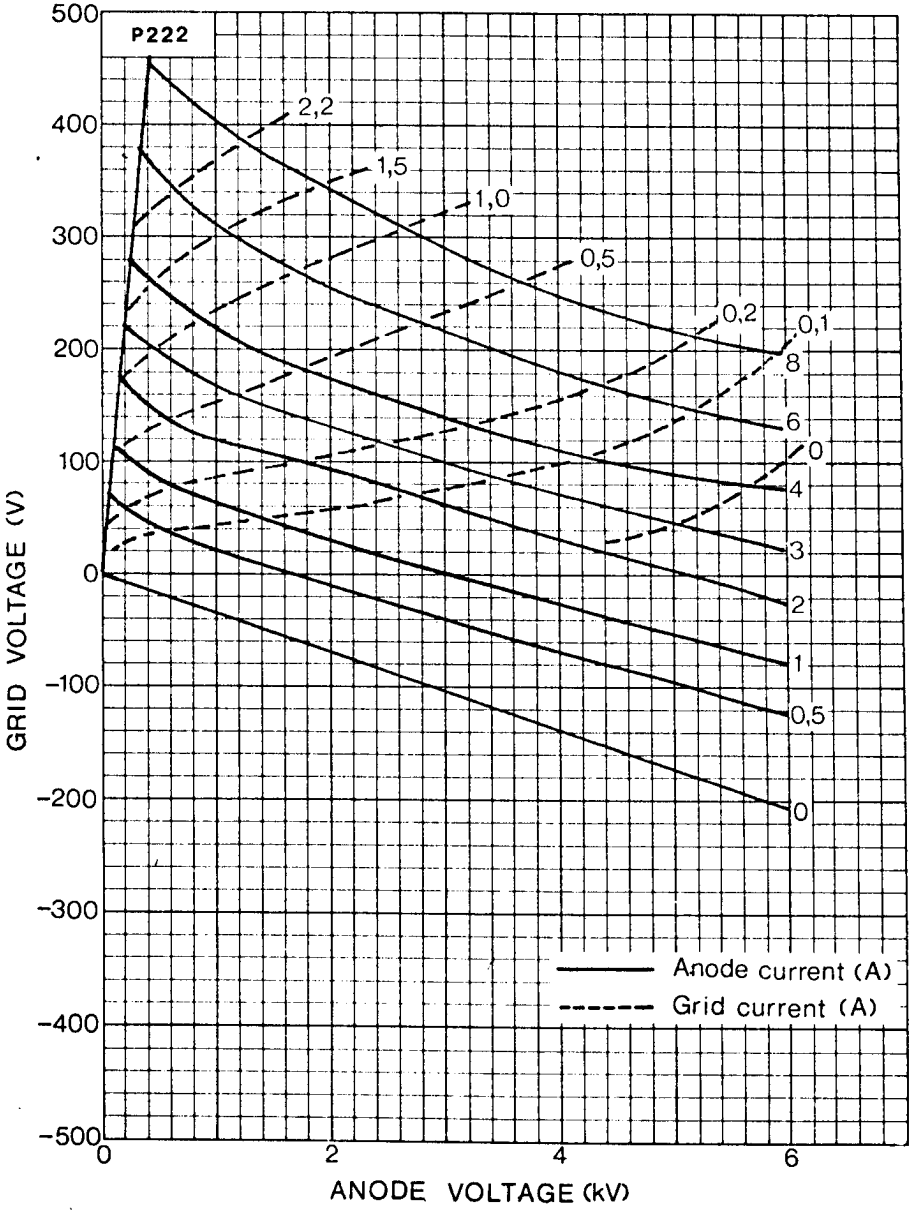

Fig. 3. Typical Anode Current versus Grid Voltage

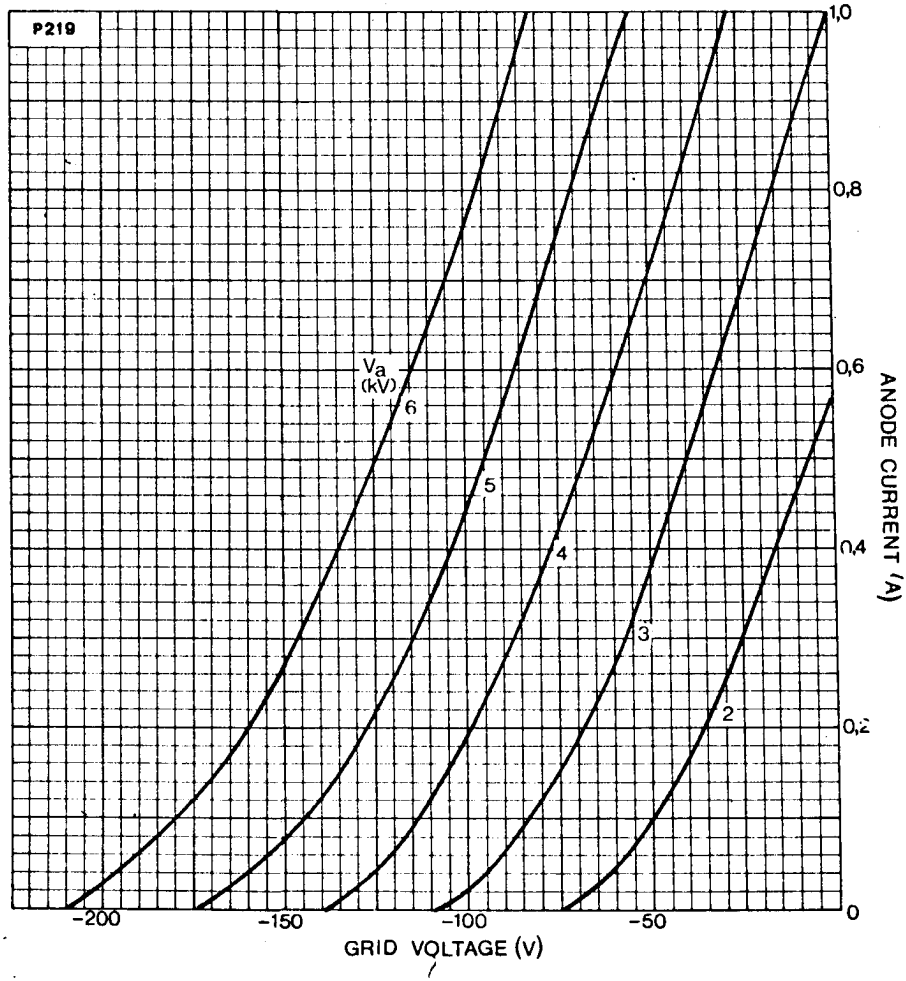

Fig. 4. Typical Power Output, Anode Current, Anode Voltage and Efficiency versus Frequency.

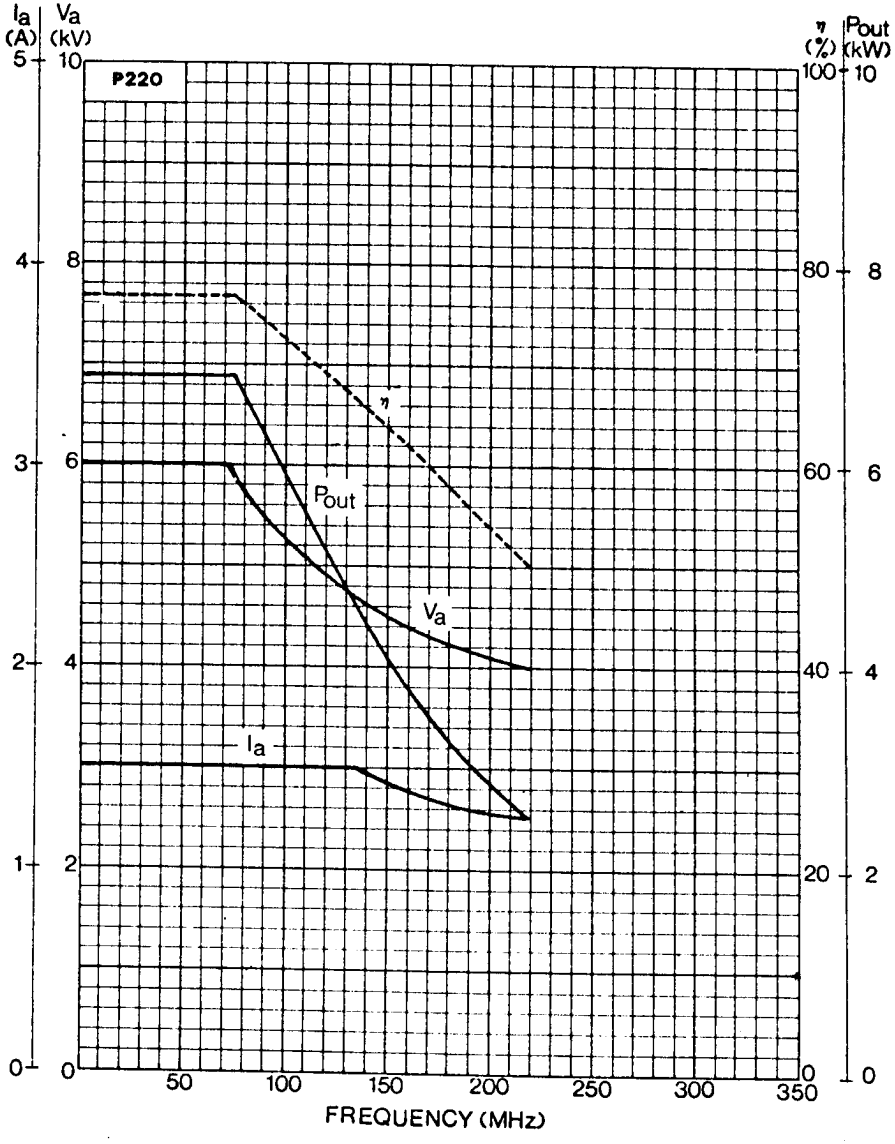

Fig. 5. Outline of 5924 Tube

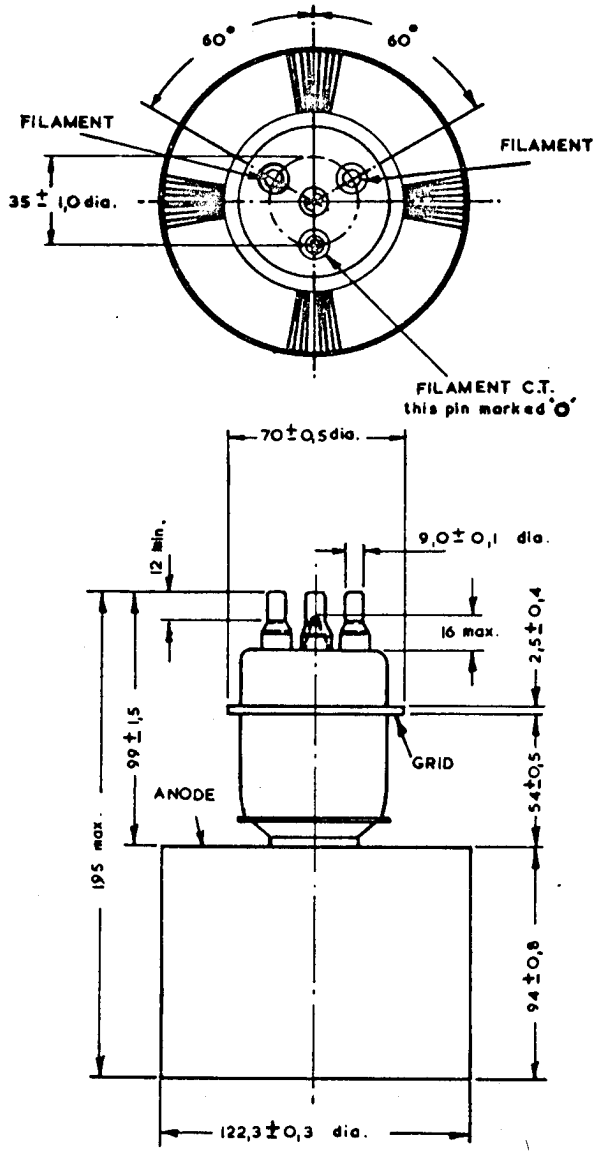

DIMENSIONS ARE MILLIMETRES

ELECTRON TUBE DEPARTMENT ■ COMPONENTS DIVISION
INTERNATIONAL TELEPHONE AND TELEGRAPH CORPORATION, CLIFTON, NEW JERSEY

KUTHE
5948
HYDROGEN
THYRATRON

DESCRIPTION:

THE 5948 IS A UNIPOTENTIAL CATHODE, THREE ELEMENT HYDROGEN FILLED THYRATRON DESIGNED FOR NETWORK DISCHARGE SERVICE. IN SUCH SERVICE, IT IS SUITABLE FOR PRODUCING PULSE OUTPUTS OF MORE THAN 12 MEGAWATTS AT AN AVERAGE POWER LEVEL OF MORE THAN 12 KW.

THE SPECIAL FEATURES OF THE 5948 INCLUDE AN INTERNAL HYDROGEN-RESERVOIR CAPABLE OF PRODUCING A WIDE RANGE OF HYDROGEN PRESSURE AND MAINTAINING THIS PRESSURE AT THE DESIRED VALUE THROUGHOUT ITS USEFUL LIFE. FURTHER FEATURES ARE THE HIGH PEAK VOLTAGE AND CURRENT RATINGS.

ELECTRICAL DATA, GENERAL:

	Nom.	Min.	Max.		
Heater Voltage	6.3	5.9	6.7		Volts A.C.
Heater Current (at 6.3 volts)		25.0	33.0		Amperes
Heater (Note 1)					
Reservoir Voltage (Note 2)		2.5	5.5		Volts
Reservoir Current at 4.5 Volts		3.0	6.0		Amperes
Minimum Heating Time				15	Minutes

MECHANICAL DATA, GENERAL:

Mounting Position	Vertical only, base down
Base	Per Outline
Anode Cap	Per Outline
Cooling (Note 3)	
Net Weight	4-1/2 Pounds
Dimensions	Per Outline

RATINGS:

Max. Peak anode voltage, forward	25	Kilovolts
Max. Peak anode voltage, inverse (Note 4)	25	Kilovolts
Min. Anode supply voltage	5.0	Kilovolts d.c.
Max. Peak anode current	1000	Amperes
Max. Average anode current	1.0	Amperes
Max. RMS anode current (Note 5)	31.8	Amperes a.c.
Max. epy x ib x prr	9.0 X 109	
Max. Anode current rate of rise	5000	Amperes/usecond
Peak trigger voltage (Note 6)		
Max. Peak inverse trigger voltage	650	Volts
Max. Anode delay time (Note 7)	1.0	Microsecond
Max. Anode delay time drift	0.25	Microsecond
Max. Time jitter (Note 8)	0.01	Microsecond (initial)
	0.02	usecond (end of life)
Ambient Temperature	-55° to +75°	Cent.

TYPICAL OPERATION AS PULSE MODULATOR, DC RESONANT CHARGING:

Peak Network voltage	25.0	15.0	Kilovolts
Pulse Repetition rate	360	1500	Pulses/second
Pulse Length	2.5	1.25	Microsecond
Pulse Forming network impedance	13	15.6	Ohms
Trigger Voltage	800	800	Volts
Peak Power output (Resistive load 92% Zn)	11.7	3.6	Megawatt
Peak Anode current	1000	500	Amperes
Average Anode current	0.90	0.94	Amperes d.c.

Note 1:
Cathode connected to center of cathode heater.

Note 2:

Reservoir voltage is marked on the base of each 5948.

This is the correct voltage for one typical operating condition but is not the optimum value for all types of operation. This value may be used initially in new applications and the optimum value may then be obtained by exploring the range of voltage on either side of that marked on the tube. Excess-reservoir voltage will result in a failure of this thyratron to deionize between pulses (continuous conduction). Insufficient reservoir voltage will result in excess anode dissipation as indicated by visible heating of the anode. The optimum reservoir voltage is the midpoint between these two extremes. In certain applications it may be necessary to provide a regulated source to assure operation within the permissible range of reservoir voltages.

NOTE 3:

COOLING OF THE ANODE LEAD IS PERMISSIBLE, BUT THERE SHALL BE NO AIR BLAST DIRECTLY ON THE BULB.

NOTE 4:

DURING THE FIRST 25 MICROSECONDS AFTER CONDUCTION, THE PEAK INVERSE ANODE VOLTAGE SHALL NOT EXCEED 5 KV.

NOTE 5:

THE ROOT MEAN SQUARE ANODE CURRENT SHALL BE COMPUTED AS THE SQUARE ROOT OF THE PRODUCT OF PEAK CURRENT AND THE AVERAGE CURRENT.

NOTE 6:

THE PULSE PRODUCED BY THE DRIVER CIRCUIT SHALL HAVE THE FOLLOWING CHARACTERISTICS WHEN VIEWED AT THE 5948 SOCKET WITH THE TUBE REMOVED:

A.	AMPLITUDE	700-1000 VOLTS
B.	DURATION	2 MICROSECONDS (AT 70% POINTS)
C.	RATE OF RISE	1000 VOLTS/MICROSECOND (MIN.)
D.	IMPEDANCE	50-200 OHMS

THE LIMITS OF ANODE TIME DELAY AND ANODE TIME JITTER ARE BASED ON THE MINIMUM TRIGGER. USING THE HIGHEST PERMISSIBLE TRIGGER VOLTAGE AND LOWEST TRIGGER SOURCE IMPEDANCE WILL MATERIALLY REDUCE THESE VALUES BELOW THE LIMITS SPECIFIED.

NOTE 7:

THE TIME OF ANODE DELAY IS MEASURED BETWEEN THE 26 PERCENT POINT ON THE RISING PORTION OF THE UNLOADED GRID VOLTAGE PULSE AND THE POINT AT WHICH ANODE CONDUCTION FIRST EVIDENCES ITSELF ON THE LOADED GRID PULSE.

NOTE 8:

TIME JITTER IS MEASURED AT THE 50 PERCENT POINT ON THE ANODE CURRENT PULSE.

ADDITIONAL INFORMATION FOR SPECIFIC APPLICATIONS CAN BE OBTAINED FROM THE:

ELECTRON TUBE APPLICATIONS SECTION
ITT COMPONENTS DIVISION
POST OFFICE BOX 412
CLIFTON, NEW JERSEY

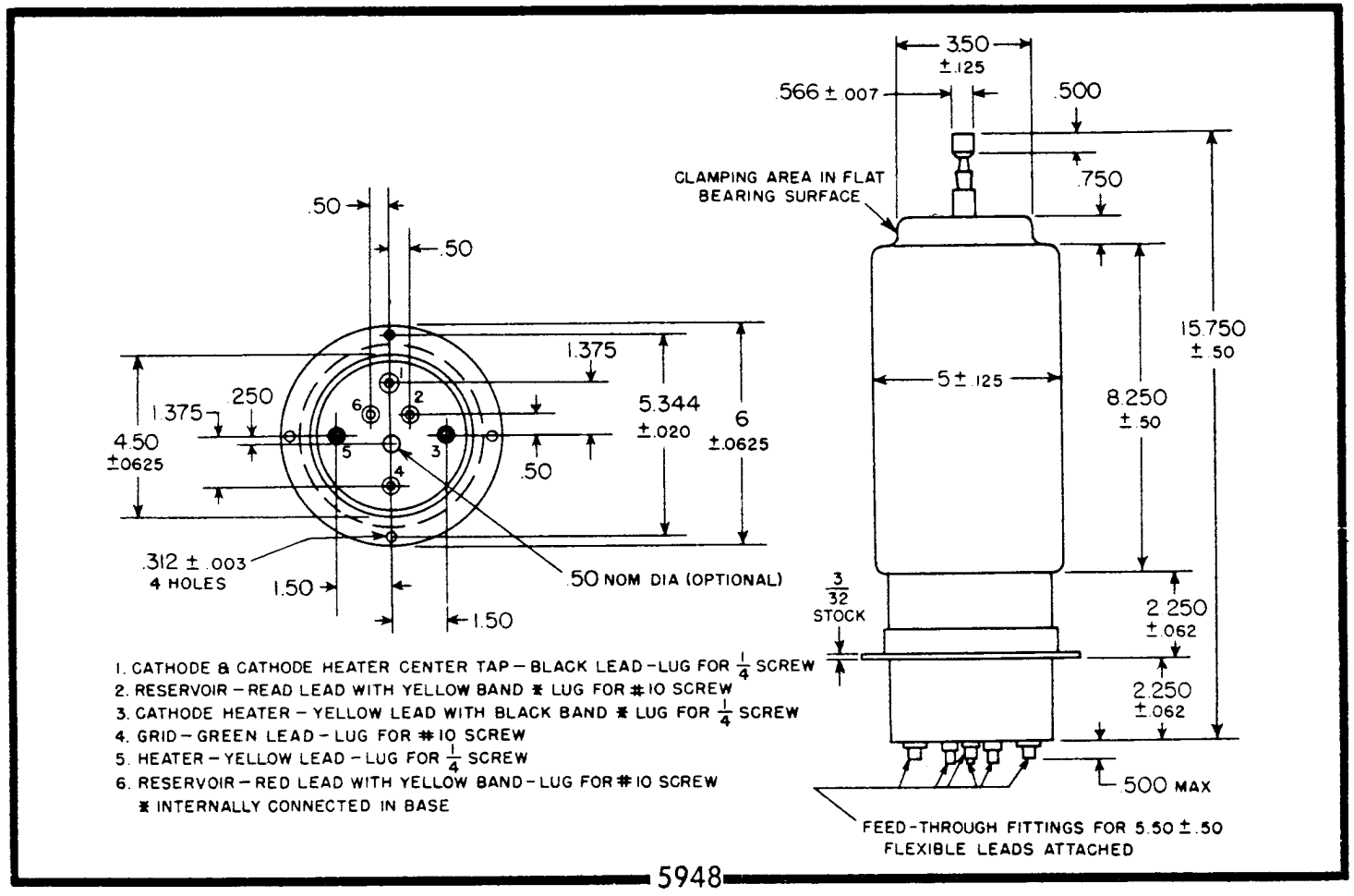
3.50
±.125
.566 ± .007
.500
.750
CLAMPING AREA IN FLAT
BEARING SURFACE
15.750
± .50
5 ± .125
8.250
± .50
3/32
STOCK
2.250
±.062
2.250
±.062
.500 MAX
FEED-THROUGH FITTINGS FOR 5.50 ± .50
FLEXIBLE LEADS ATTACHED
.50
.50
1.375
5.344
±.020
6
±.0625
1.375
.250
4.50
±.0625
.50
.312 ± .003
4 HOLES
1.50
1.50
.50 NOM DIA (OPTIONAL)
1. CATHODE & CATHODE HEATER CENTER TAP – BLACK LEAD – LUG FOR 1/4 SCREW
2. RESERVOIR – READ LEAD WITH YELLOW BAND * LUG FOR #10 SCREW
3. CATHODE HEATER – YELLOW LEAD WITH BLACK BAND * LUG FOR 1/4 SCREW
4. GRID – GREEN LEAD – LUG FOR #10 SCREW
5. HEATER – YELLOW LEAD – LUG FOR 1/4 SCREW
6. RESERVOIR – RED LEAD WITH YELLOW BAND – LUG FOR #10 SCREW
* INTERNALLY CONNECTED IN BASE

KUTHE
5948A
HYDROGEN
THYRATRON

DESCRIPTION:

THE 5948A IS A UNIPOTENTIAL CATHODE, THREE ELEMENT HYDROGEN FILLED THYRATRON DESIGNED FOR NETWORK DISCHARGE SERVICE. IN SUCH SERVICE, IT IS SUITABLE FOR PRODUCING PULSE OUTPUTS OF MORE THAN 12 MEGAWATTS AT AN AVERAGE POWER LEVEL OF MORE THAN 12 KW.

THE SPECIAL FEATURES OF THE 5948A INCLUDE AN INTERNAL HYDROGEN-RESERVOIR CAPABLE OF PRODUCING A WIDE RANGE OF HYDROGEN PRESSURE AND MAINTAINING THIS PRESSURE AT THE DESIRED VALUE THROUGHOUT ITS USEFUL LIFE. FURTHER FEATURES ARE THE HIGH PEAK VOLTAGE AND CURRENT RATINGS.

ELECTRICAL DATA, GENERAL:	NOM.	MIN.	MAX.	
HEATER VOLTAGE	6.3	5.9	6.7	VOLTS A.C.
HEATER CURRENT (AT 6.3 VOLTS)		25.0	33.0	AMPERES
HEATER (NOTE 1)				
RESERVOIR VOLTAGE (NOTE 2)		2.5	5.5	VOLTS
RESERVOIR CURRENT AT 4.5 VOLTS		3.0	6.0	AMPERES
MINIMUM HEATING TIME			3	MINUTES

MECHANICAL DATA, GENERAL:

MOUNTING POSITION	VERTICAL ONLY,	BASE DOWN
BASE		PER OUTLINE
ANODE CAP		PER OUTLINE
COOLING (NOTE 3)		
NET WEIGHT	4-1/2	POUNDS
DIMENSIONS		SEE OUTLINE

RATINGS:

Max. Peak Anode Voltage, Forward	25	Kilovolts
Max. Peak Anode Voltage, Inverse (Note 4)	25	Kilovolts
Min. Anode Supply Voltage	5.0	Kilovolts d.c.
Max. Peak Anode Current	1,000	Amperes
Max. Average Anode Current	1.0	Amperes
Max. RMS Anode Current (Note 5)	30.0	Amperes a.c.
Max. epy x ib x prr	9.0×10^9	
Max. Anode Current Rate of Rise	5,000	Amperes/μSecond
Peak Trigger Voltage (Note 6)		
Max. Peak Inverse Trigger Voltage	650	Volts
Max. Anode Delay Time (Note 7)	1.0	Microsecond
Max. Anode Delay Time Drift	0.25	Microsecond
Max. Time Jitter (Note 8)	0.01	Microsecond (initial)
	0.01	μSecond (end of life)
Ambient Temperature	-55° to +75°	Cent.

TYPICAL OPERATION AS PULSE MODULATOR, DC RESONANT CHARGING:

Peak Network Voltage	25.0	15.0	Kilovolts
Pulse Repetition Rate	360	1,500	Pulses/Second
Pulse Length	2.5	1.25	Microsecond
Pulse Forming Network Impedance	13	15.6	Ohms
Trigger Voltage	800	800	Volts
Peak Power Output (Resistive Load 92% Zn)	11.7	3.6	Megawatt
Peak Anode Current	1,000	500	Amperes
Average Anode Current	0.90	0.94	Amperes d.c.

Note 1:

Cathode connected to center of cathode heater.

Note 2:

Reservoir voltage is marked on the base of each 5948A.

This is the correct voltage for one typical operating condition but is not the optimum value for all types of operation. This value may be used initially in new applications and the optimum value may then be obtained by exploring the range of voltage on either side of that marked on the tube. Excess-reservoir voltage will result in a failure of this thyratron to deionize between pulses (continuous conduction). Insufficient reservoir voltage will result in excess anode dissipation as indicated by visible heating of the anode. The optimum reservoir voltage is the midpoint between these two extremes.

In certain applications it may be necessary to provide a regulated source to assure operation within the permissible range of reservoir voltages.

NOTE 3:

COOLING OF THE ANODE LEAD IS PERMISSIBLE, BUT THERE SHALL BE NO AIR BLAST DIRECTLY ON THE BULB.

NOTE 4:

DURING THE FIRST 25 MICROSECONDS AFTER CONDUCTION, THE PEAK INVERSE ANODE VOLTAGE SHALL NOT EXCEED 5 KV.

NOTE 5:

THE ROOT MEAN SQUARE ANODE CURRENT SHALL BE COMPUTED AS THE SQUARE ROOT OF THE PRODUCT OF PEAK CURRENT AND THE AVERAGE CURRENT.

NOTE 6:

THE PULSE PRODUCED BY THE DRIVER CIRCUIT SHALL HAVE THE FOLLOWING CHARACTERISTICS WHEN VIEWED AT THE 5948A SOCKET WITH THE TUBE REMOVED:

A.	AMPLITUDE	700-1000 VOLTS
B.	DURATION	2 MICROSECONDS (AT 70% POINTS)
C.	RATE OF RISE	1000 VOLTS/MICROSECOND (MIN.)
D.	IMPEDANCE	50-200 OHMS

THE LIMITS OF ANODE TIME DELAY AND ANODE TIME JITTER ARE BASED ON THE MINIMUM TRIGGER. USING THE HIGHEST PERMISSIBLE TRIGGER VOLTAGE AND LOWEST TRIGGER SOURCE IMPEDANCE WILL MATERIALLY REDUCE THESE VALUES BELOW THE LIMITS SPECIFIED.

NOTE 7:

THE TIME OF ANODE DELAY IS MEASURED BETWEEN THE 26 PERCENT POINT ON THE RISING PORTION OF THE UNLOADED GRID VOLTAGE PULSE AND THE POINT AT WHICH ANODE CONDUCTION FIRST EVIDENCES ITSELF ON THE LOADED GRID PULSE.

NOTE 8:

TIME JITTER IS MEASURED AT THE 50 PERCENT POINT ON THE ANODE CURRENT PULSE.

ADDITIONAL INFORMATION FOR SPECIFIC APPLICATIONS CAN BE OBTAINED FROM THE

ELECTRON TUBE APPLICATIONS SECTION
ITT COMPONENTS DIVISION - P.O. BOX 412
CLIFTON, NEW JERSEY

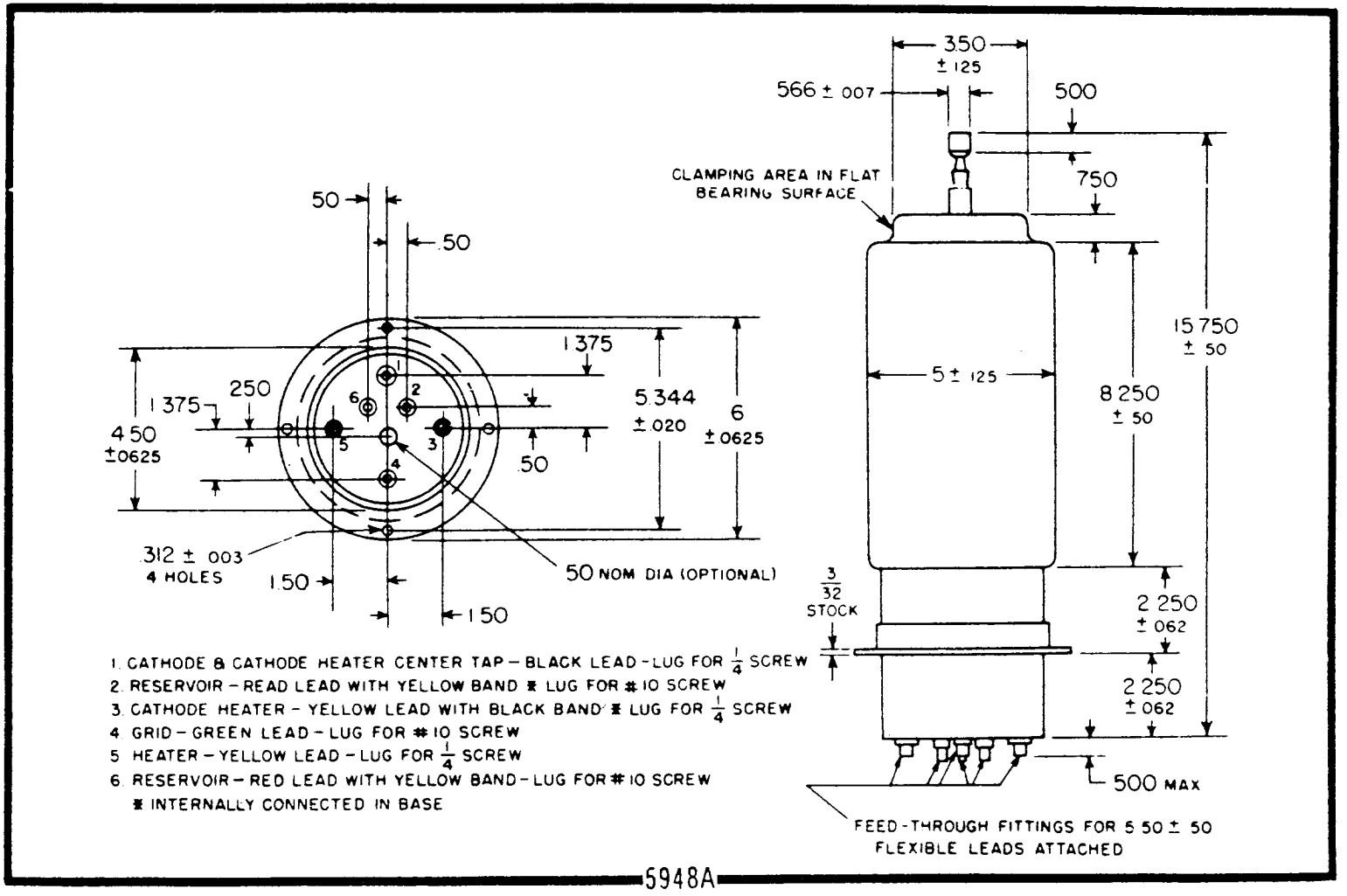
.350
± .125
.566 ± .007
.500
CLAMPING AREA IN FLAT BEARING SURFACE
.750
15.750
± .50
.50
.50
1.375
.250
1.375
5.344
± .020
6
± .0625
4.50
± .0625
.50
5 ± .125
8.250
± .50
.312 ± .003
4 HOLES
1.50
1.50
.50 NOM DIA (OPTIONAL)
3/32
STOCK
2.250
± .062
2.250
± .062
.500 MAX
FEED-THROUGH FITTINGS FOR 5.50 ± .50
FLEXIBLE LEADS ATTACHED
1. CATHODE & CATHODE HEATER CENTER TAP – BLACK LEAD – LUG FOR 1/4 SCREW
2. RESERVOIR – READ LEAD WITH YELLOW BAND * LUG FOR #10 SCREW
3. CATHODE HEATER – YELLOW LEAD WITH BLACK BAND * LUG FOR 1/4 SCREW
4. GRID – GREEN LEAD – LUG FOR #10 SCREW
5. HEATER – YELLOW LEAD – LUG FOR 1/4 SCREW
6. RESERVOIR – RED LEAD WITH YELLOW BAND – LUG FOR #10 SCREW
* INTERNALLY CONNECTED IN BASE

5948A

ELECTRON TUBE DEPARTMENT ■ COMPONENTS DIVISION
INTERNATIONAL TELEPHONE AND TELEGRAPH CORPORATION, CLIFTON, NEW JERSEY

KUTHE
5949
HYDROGEN
THYRATRON

DESCRIPTION:

THE 5949 IS A UNIPOTENTIAL CATHODE, THREE ELEMENT HYDROGEN FILLED THYRATRON DESIGNED FOR NETWORK DISCHARGE SERVICE. IN SUCH SERVICE, IT IS SUITABLE FOR PRODUCING PULSE OUTPUTS OF MORE THAN 6 MEGAWATTS AT AN AVERAGE POWER LEVEL OF MORE THAN 6 KW.

THE SPECIAL FEATURES OF THE 5949 INCLUDE AN INTERNAL HYDROGEN RESERVOIR CAPABLE OF PRODUCING A WIDE RANGE OF HYDROGEN PRESSURE AND MAINTAINING THIS PRESSURE AT THE DESIRED VALUE THROUGHOUT ITS USEFUL LIFE.

ELECTRICAL DATA, GENERAL:	NOM.	MIN.	MAX.		
HEATER VOLTAGE	6.3	6.0	6.6		VOLTS A.C.
HEATER CURRENT (AT 6.3 VOLTS)		15.0	22.0		AMPERES
HEATER (NOTE 1)					
RESERVOIR VOLTAGE (NOTE 2)		3.0	5.5		VOLTS
RESERVOIR CURRENT AT 4.5 VOLTS		2.0	5.0		AMPERES
MINIMUM HEATING TIME				15	MINUTES

MECHANICAL DATA, GENERAL:		
MOUNTING POSITION		ANY
BASE		PER OUTLINE
ANODE CAP		PER OUTLINE
COOLING (NOTE 3)		
NET WEIGHT	1-1/2	POUNDS
DIMENSIONS		SEE OUTLINE

RATINGS:

Max. Peak Anode Voltage, Forward	25.0	Kilovolts
Max. Peak Anode Voltage, Inverse (Note 4)	25.0	Kilovolts
Min. Anode Supply Voltage	5.0	Kilovolts d.c.
Max. Peak Anode Current	500	Amperes
Max. Average Anode Current	500	Milliamperes
Max. RMS Anode Current (Note 5)	15.8	Amperes a.c.
Max. epy x ib x prr	6.25 x 109	
Max. Anode Current Rate of Rise	2,500	Amperes/ uSecond
Peak Trigger Voltage (Note 6)		
Max. Anode Delay Time (Note 7)	1.0	Microsecond
Max. Anode Delay Time Drift	0.25	Microsecond
Max. Time Jitter (Note 8)	0.01	Microsecond (initial)
	0.02	uSecond (end of life)
Ambient Temperature	-55° to +75°	Cent.

TYPICAL OPERATION AS PULSE MODULATOR, DC RESONANT CHARGING:

Peak Network Voltage	25.0	20.0	Kilovolts
Pulse Repetition Rate	500	1200	Pulses/Second
Pulse Length	2.0	1.0	Microsecond
Pulse Forming Network Impedance	26	52	Ohms
Trigger Voltage	600	600	Volts
Peak Power Output (Resistive Load 92% zn)	5.9	1.9	Megawatt
Peak Anode Current	500	200	Amperes
Average Anode Current	0.50	0.24	Amperes d.c.

Note 1:

Cathode connected to center of cathode heater.

Note 2:

The optimum reservoir voltage for operation at 500 pulses/sec. (max.) with a peak forward voltage (epy) of 25 KV (max.) is inscribed on the base of the tube. Applications involving other operating conditions will necessitate the redetermination of the optimum reservoir value. Any optimum value should be held to within ±5%. Excess reservoir voltage will result in a failure of this thyratron to deionize between pulses (continuous conduction). Insufficient reservoir voltage will result in excess anode dissipation as indicated by visible heating of the anode.

The optimum reservoir voltage is the midpoint between these two extremes. In certain applications it may be necessary to provide a regulated source to assure operation within the permissible range of reservoir voltages.

Note 3:

Cooling of the anode lead is permissible, but there shall be no air blast directly on the bulb.

Note 4:

During the first 25 microseconds after conduction, the peak inverse anode voltage shall not exceed 5 KV.

Note 5:

The root mean square anode current shall be computed as the square root of the product of peak current and the average current.

Note 6:

The pulse produced by the driver circuit shall have the following characteristics when viewed at the 5949 socket with the tube grid disconnected:

A.	Amplitude	550-1000 Volts
B.	Duration,	2 Microseconds (at 70% points)
C.	Rate of Rise	1800 Volts/microsecond (min.)
D.	Impedance	50-200 Ohms

The limits of anode time delay and anode time jitter are based on the minimum trigger. Using the highest permissible trigger voltage and lowest trigger source impedance materially reduces these values below the limits specified.

Note 7:

The time of anode delay is measured between the 26 percent point on the rising portion of the unloaded grid voltage pulse and the point at which anode conduction first evidences itself on the loaded grid pulse.

Note 8:

Time jitter is measured at the 50 percent point on the anode current pulse.

Additional information for specific applications can be obtained from the

Electron Tube Applications Section
ITT Components Division - P.O. Box 412
Clifton, New Jersey

1. CAPSULE-HEATER
2. CATHODE
3. GRID
4. CAPSULE
5. HEATER

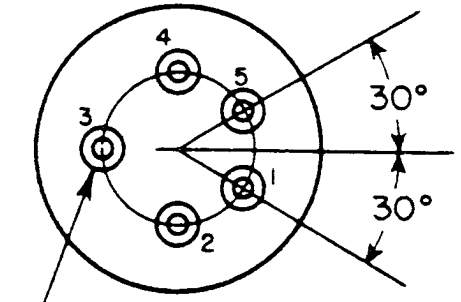

5 PIN A5-19 SHELL
.187± .003 DIA. PIN
1.250 DIA. PIN CIRCLE

NOTE: CONSULT MFG ON CLAMPING

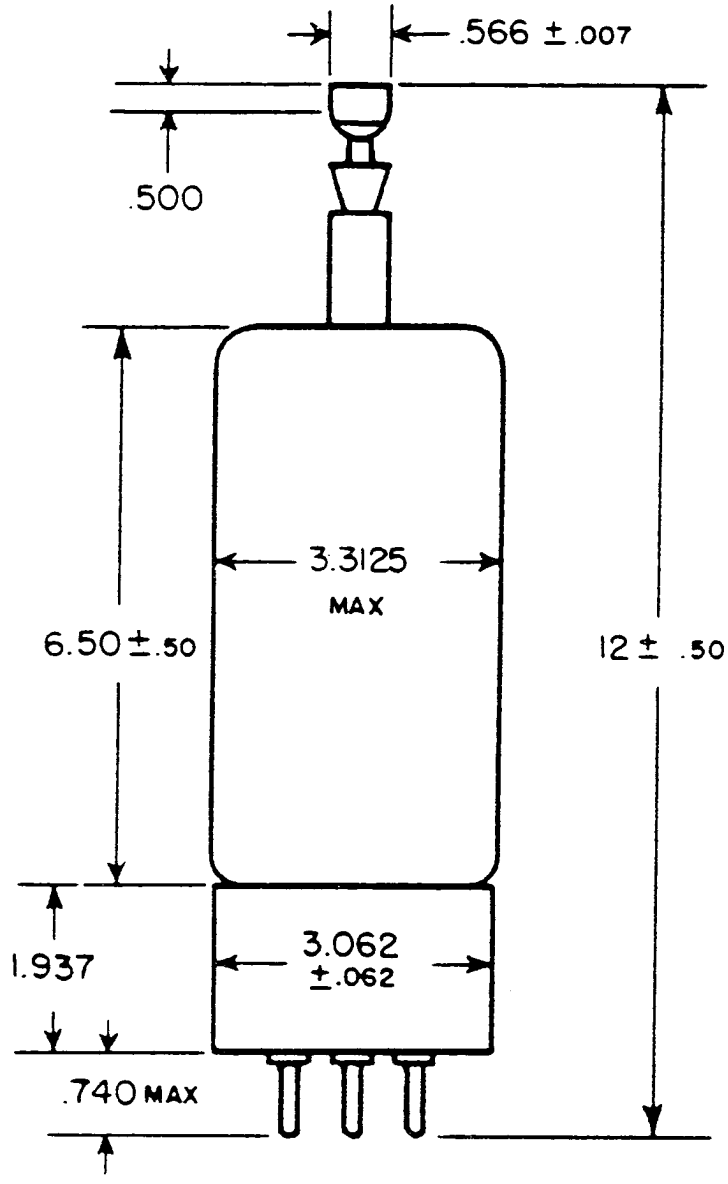

5949

ELECTRON TUBE DEPARTMENT ■ COMPONENTS DIVISION
INTERNATIONAL TELEPHONE AND TELEGRAPH CORPORATION, CLIFTON, NEW JERSEY

KUTHE
5956
HYDROGEN
THYRATRON

DESCRIPTION:

THE 5956 IS A UNIPOTENTIAL CATHODE, THREE ELEMENT HYDROGEN FILLED THYRATRON DESIGNED FOR NETWORK DISCHARGE SERVICE. IN SUCH SERVICE IT IS SUITABLE FOR PRODUCING PULSE OUTPUTS OF MORE THAN 350 KW AT AN AVERAGE POWER LEVEL OF MORE THAN 400 WATTS. IT IS ESPECIALLY SUITABLE FOR COMPACT, AIRBORNE RADAR SYSTEMS.

THE SPECIAL FEATURES OF THE 5956 INCLUDE THE HIGH PEAK VOLTAGE AND CURRENT RATING, THE VERY COMPACT SIZE, AND A HYDROGEN RESERVOIR CONNECTED INTERNALLY ACROSS THE FILAMENT, CAPABLE OF MAINTAINING THE HYDROGEN PRESSURE THROUGHOUT THE USEFUL LIFE OF THE TUBE.

ELECTRICAL DATA, GENERAL:

	Nom.	Min.	Max.		
Heater Voltage	6.3	5.9	6.7		Volts A.C.
Heater Current (At 6.3 Volts)		5.5	6.7		Amperes
Minimum Heating Time				3	Minutes

MECHANICAL DATA, GENERAL:

Mounting Position		Any
Base	A4-102	
Anode Cap		Per Outline
Cooling (Note 1)		
Net Weight	4	Ounces
Dimensions		See Outline

TYPICAL OPERATION AS PULSE MODULATOR, DC RESONANT CHARGING:

Peak Network Voltage	8.0	Kilovolts
Pulse Repetition Rate	4,500	Pulses/Second
Pulse Length	0.25	Microsecond
Pulse Forming Network Impedance	50.2	Ohms
Trigger Voltage	200	Volts
Peak Power Output (Resistive Load 92% Zn)	311	Kilowatts
Peak Anode Current	83	Amperes
Average Anode Current	0.094	Amperes d.c.

RATINGS:

Max. Peak Anode Voltage, Forward	8.0	Kilovolts
Max. Peak Anode Voltage, Inverse (Note 2)	8.0	Kilovolts
Min. Anode Supply Voltage	2.5	Kilovolts d.c.
Max. Peak Anode Current	83	Amperes
Max. Average Anode Current	100	Milliamperes
Max. RMS Anode Current (Note 3)	2.9	Amperes a.c.
Max. epy x ib x prr	2.5 x 10^9	
Max. Anode Current Rate of Rise	1,200	Ampere/μSecond
Peak Trigger Voltage (Note 4)		
Max. Peak Inverse Trigger Voltage	200	Volts

	Initial Limit	End of Limit Limit	
Max. Anode Delay Time (Note 5)	0.5	0.6	μSecond
Max. Anode Delay Time Drift	0.1	0.1	μSecond
Max. Time Jitter (Note 6)	0.01	0.02	μSecond
Ambient Temperature		-50° to +90°	Cent.
Shock Rating		24°	Navy (Flyweight) Shock Machine
Altitude		50,000	Feet at 5.5 KV Peak and 57 Amperes Peak

Note 1:

Cooling permitted. However, there shall be no airblast directly on the bulb.

Note 2:

The peak inverse voltage should not exceed 2.5 KV during the first 25 microseconds after conduction.

NOTE 3:

THE ROOT MEAN SQUARE ANODE CURRENT SHALL BE COMPUTED AS THE SQUARE ROOT OF THE PRODUCT OF THE PEAK CURRENT AND THE AVERAGE CURRENT.

NOTE 4:

THE VOLTAGE BETWEEN GRID AND CATHODE TERMINALS OF THE SOCKET WITH THE TUBE REMOVED SHOULD HAVE THE FOLLOWING CHARACTERISTICS.

A.	VOLTAGE	175-250 VOLTS
B.	DURATION	2 MICROSECONDS (AT 70% POINTS)
C.	SOURCE IMPEDANCE	1500 OHMS (MAX.)
D.	RATE OF RISE	200 VOLTS/MICROSECOND (MIN.)

THE LIMITS OF ANODE TIME DELAY AND ANODE TIME JITTER ARE BASED ON THE MINIMUM TRIGGER. USING THE HIGHEST PERMISSIBLE TRIGGER VOLTAGE AND LOWEST TRIGGER SOURCE IMPEDANCE MATERIALLY REDUCES THESE VALUES BELOW THE LIMITS SPECIFIED.

NOTE 5:

THE TIME OF ANODE DELAY IS MEASURED BETWEEN THE 26 PERCENT POINT ON THE RISING PORTION OF THE UNLOADED GRID VOLTAGE PULSE AND THE POINT AT WHICH EVIDENCE OF ANODE CONDUCTION FIRST APPEARS ON THE LOADED GRID PULSE.

NOTE 6:

TIME JITTER IS MEASURED AT THE 50 PERCENT POINT ON THE ANODE CURRENT PULSE.

ADDITIONAL INFORMATION FOR SPECIFIC APPLICATIONS CAN BE OBTAINED FROM THE

ELECTRON TUBE APPLICATIONS SECTION
ITT COMPONENTS DIVISION
POST OFFICE BOX 412
CLIFTON, NEW JERSEY

1. HEATER
2. CATHODE
3. GRID
4. HEATER CATHODE
   TOP LEAD - ANODE

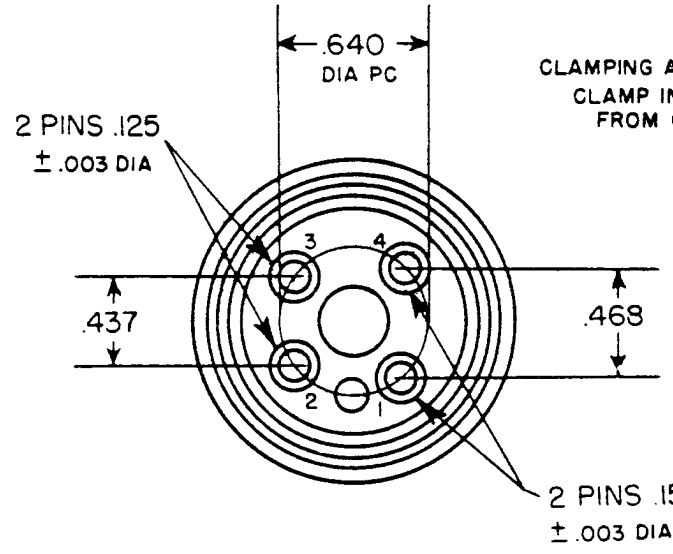

A 4 - 120 Base

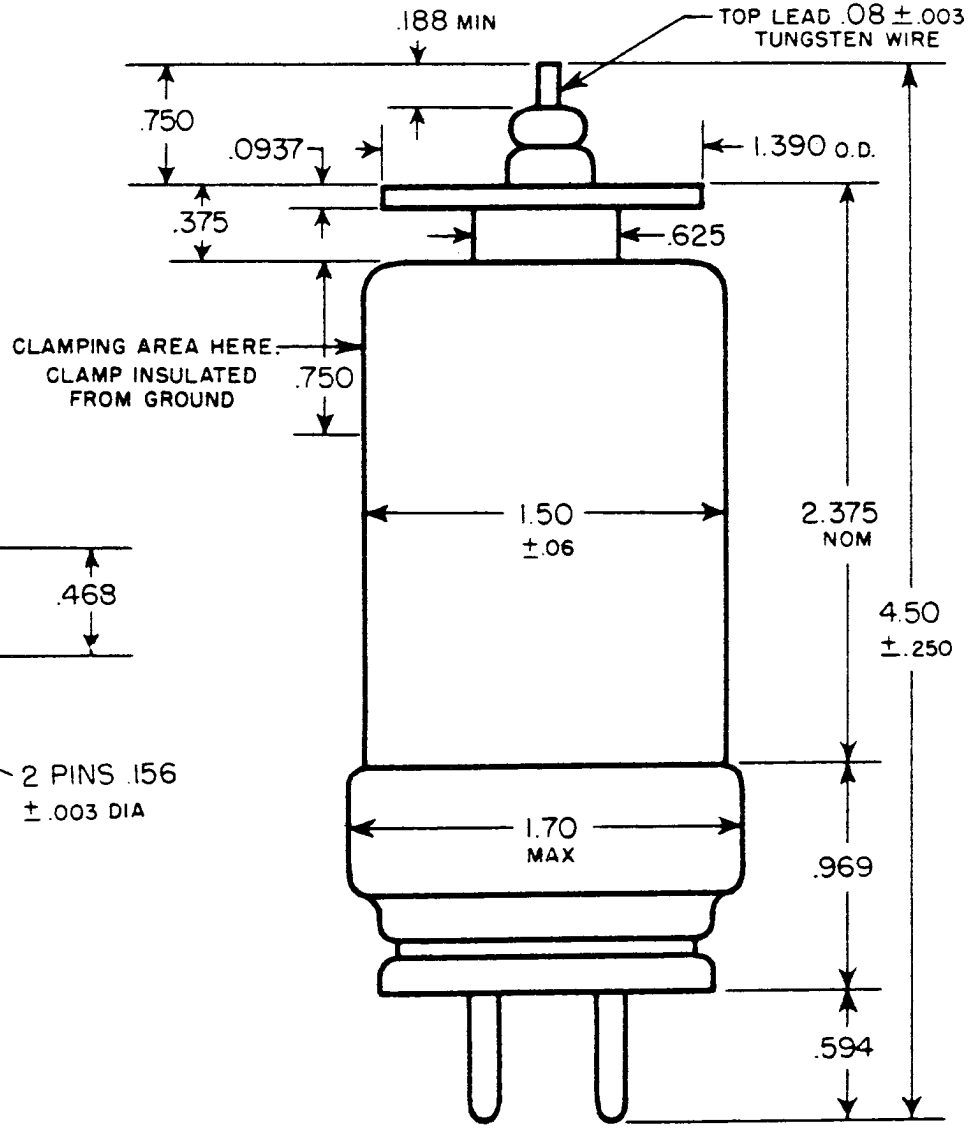

5956

ELECTRON TUBE DEPARTMENT ■ COMPONENTS DIVISION
INTERNATIONAL TELEPHONE AND TELEGRAPH CORPORATION, CLIFTON, NEW JERSEY

KUTHE
5957
HYDROGEN
THYRATRON

DESCRIPTION:

THE 5957 IS A UNIPOTENTIAL CATHODE, THREE ELEMENT HYDROGEN FILLED THYRATRON DESIGNED FOR NETWORK DISCHARGE SERVICE. IN SUCH SERVICE, IT IS SUITABLE FOR PRODUCING PULSE OUTPUTS OF MORE THAN 350 KW AT AN AVERAGE POWER LEVEL OF MORE THAN 400 WATTS. ITS SIZE MAKES IT ESPECIALLY SUITABLE FOR COMPACT, AIRBORNE RADAR SYSTEMS.

THE SPECIAL FEATURES OF THE E-37B INCLUDE THE HIGH PEAK VOLTAGE AND CURRENT RATINGS, ITS VERY COMPACT SIZE AND AN INTERNAL HYDROGEN RESERVOIR CAPABLE OF MAINTAINING THE HYDROGEN PRESSURE THROUGHOUT THE USEFUL LIFE OF THE TUBE.

ELECTRICAL DATA, GENERAL:

	Nom.	Min.	Max.		
Heater Voltage	6.3	5.7	6.9		Volts a.c.
Heater Current (E_h=6.3 volts)		5.5	6.7		Amperes
Minimum Heating Time				3	Minutes

MECHANICAL DATA, GENERAL:

Mounting Position		Any
Base	A4-103	
Anode Cap	Small Metal, C1-1	
Cooling (Note 1)		
Net Weight	3-1/2	Ounces
Dimensions		See Outline

RATINGS:

Max. Peak Anode Voltage, Forward (Note 2)	8.0	Kilovolts
Max. Peak Anode Voltage, Inverse (Note 3)	8.0	Kilovolts
Min. Anode Supply Voltage	2.5	Kilvolts d.c.
Max. Peak Anode Current	83	Amperes
Max. Average Anode Current	100	Milliamperes
Max. RMS Anode Current (Note 4)	2.9	Amperes a.c.
Max. epy x ib x prr	2.5×10^9	
Max. Anode Current Rate of Rise	1,200	Amperes/uSecond
Peak Trigger Voltage (Note 5)		
Max. Peak Inverse Trigger Voltage	200	Volts
Max. Anode Delay Time (Note 6)	0.50	Microsecond
Max. Anode Delay Time Drift	0.10	Microsecond
Max. Time Jitter (Note 7)	0.01	Microsecond (initial)
	0.02	μSecond (end of Life)
Ambient Temperature	-50° to +90°	Cent.
Shock Rating	24°	Navy (Flyweight) Shock Machine

TYPICAL OPERATION AS PULSE MODULATOR, DC RESONANT CHARGING:

Peak Network Voltage	8.0	Kilovolts
Pulse Repetition Rate	4,500	Pulses/Second
Pulse Length	0.25	Microsecond
Pulse Forming Network Impedance	50.2	Ohms
Trigger Voltage	200	Volts
Peak Power Output (Resistive Load 92% Zn)	311	Kilowatts
Peak Anode Current	83	Amperes
Average Anode Current	0.094	Amperes d.c.

Note 1:

Cooling permitted. However, there shall be no air blast directly on the bulb.

Note 2:

For instantaneous starting application, where the plate voltage is applied instantaneously, the maximum permissible epy is 7,000 volts.

Note 3:

The peak inverse voltage should not exceed 2.5 KV during the first 25 micro-seconds after the pulse.

NOTE 4:

THE ROOT MEAN SQUARE ANODE CURRENT SHALL BE COMPUTED AS THE SQUARE ROOT OF THE PRODUCT OF THE PEAK CURRENT AND THE AVERAGE CURRENT.

NOTE 5:

THE DRIVER PULSE, MEASURED AT THE TUBE SOCKET WITH THE THYRATRON GRID DISCONNECTED SHOULD HAVE THE FOLLOWING CHARACTERISTICS:

A.	VOLTAGE	175 VOLTS (MIN.)
B.	DURATION	2 MICROSECONDS (AT 70% POINTS)
C.	IMPEDANCE	1500 OHMS (MAX.)
D.	TIME OF RISE	0.5 MICROSECOND (MAX.)

THE LIMITS OF ANODE TIME DELAY AND ANODE TIME JITTER ARE BASED ON THE MINIMUM TRIGGER. USING THE HIGHEST PERMISSIBLE TRIGGER VOLTAGE AND LOWEST TRIGGER SOURCE IMPEDANCE MATERIALLY REDUCES THESE VALUES BELOW THE LIMITS SPECIFIED.

NOTE 6:

THE TIME OF ANODE DELAY IS MEASURED BETWEEN THE 26 PERCENT POINT ON THE RISING PORTION OF THE UNLOADED GRID VOLTAGE PULSE AND THE POINT AT WHICH EVIDENCE OF ANODE CONDUCTION FIRST APPEARS ON THE LOADED GRID PULSE.

NOTE 7:

TIME JITTER IS MEASURED AT THE 50 PERCENT POINT ON THE ANODE CURRENT PULSE.

ADDITIONAL INFORMATION FOR SPECIFIC APPLICATIONS CAN BE OBTAINED FROM THE

ELECTRON TUBE APPLICATIONS SECTION
ITT COMPONENTS DIVISION
POST OFFICE BOX 412
CLIFTON, NEW JERSEY

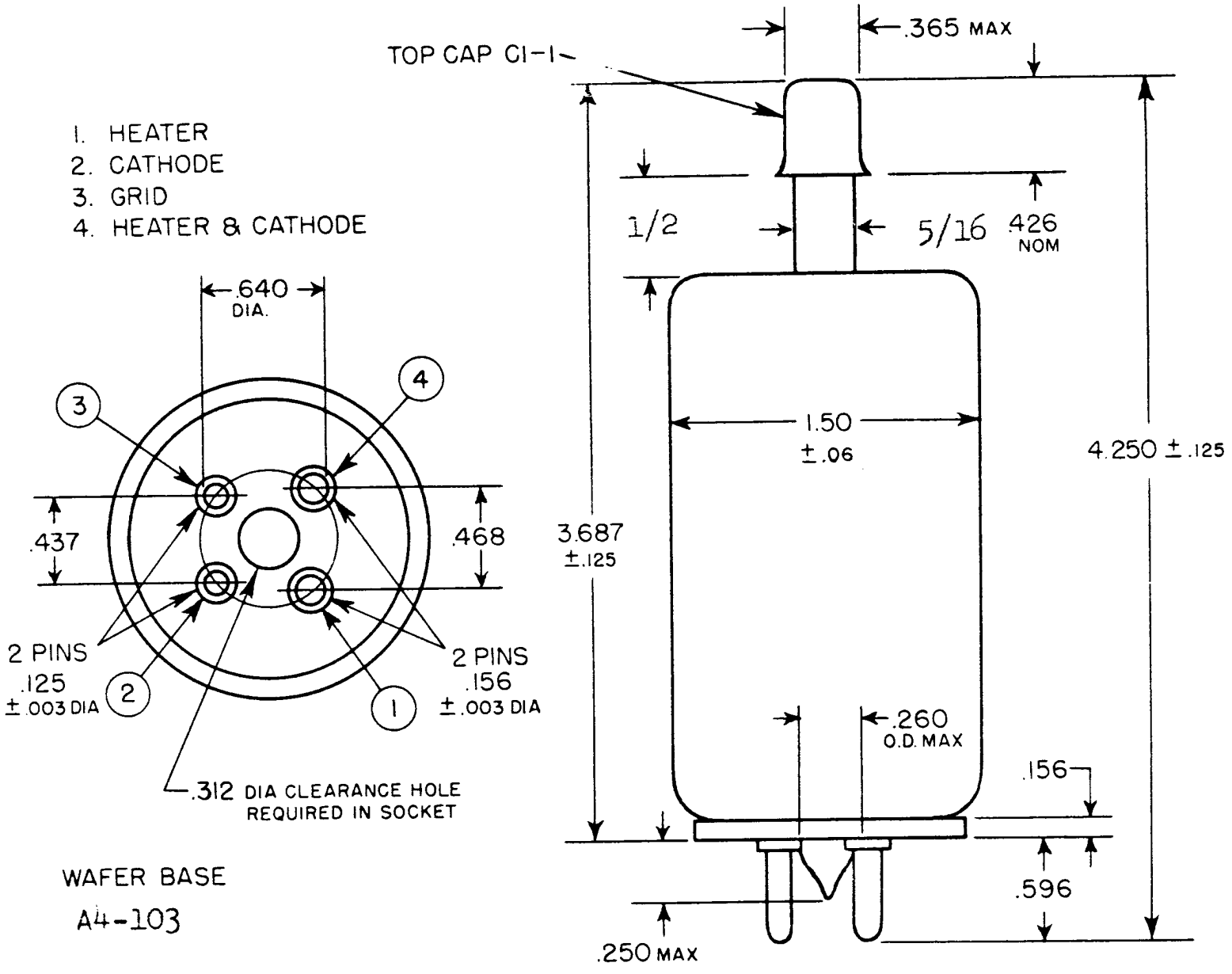

TYPE 5957 HYDROGEN THYRATRON

ELECTRON TUBE DEPARTMENT ■ COMPONENTS DIVISION
INTERNATIONAL TELEPHONE AND TELEGRAPH CORPORATION, CLIFTON, NEW JERSEY

DESCRIPTION:

THE TUBES OF THIS GROUP ARE UNIPOTENTIAL CATHODE, THREE ELEMENT HYDROGEN FILLED THYRATRONS DESIGNED FOR NETWORK DISCHARGE SERVICE. IN SUCH SERVICE THEY ARE SUITABLE FOR PRODUCING PULSE OUTPUTS OF MORE THAN 120 KW AT AN AVERAGE POWER OF MORE THAN 150 WATTS. THEY ARE ESPECIALLY SUITABLE FOR COMPACT, AIRBORNE RADAR SYSTEMS.

THE SPECIAL FEATURES OF THIS GROUP OF TUBES INCLUDE THE HIGH PEAK VOLTAGE AND CURRENT RATINGS IN A VERY COMPACT SIZE.

ELECTRICAL DATA, GENERAL:

	Nom.	Min.	Max.		
Heater Voltage	6.3	5.9	6.7		Volts A.C.
Heater Current (at 6.3 Volts)		2.0	2.5		Amperes
Minimum Heating Time				2	Minutes

MECHANICAL DATA, GENERAL:

Mounting Position		Any
Base		Per Outline
Anode Cap		Per Outline
Cooling (Note 1)		
Net Weight	4	Ounces
Dimensions		Per Outline

RATINGS:

Max. Peak Anode Voltage, Forward	8.0	Kilovolts
Max. Peak Anode Voltage, Inverse (Note 2)	8.0	Kilovolts
Min. Anode Supply Voltage	2.5	Kilovolts D.C.
Max. Peak Anode Current	35	Amperes
Max. Average Anode Current	45	Milliamperes
Max. RMS Anode Current (Note 3)	1.25	Amperes A.C.
Max. epy X ib X prr	0.75 X 109	
Max. Anode Current Rate of Rise	1200	Amperes/uSecond
Peak Trigger Voltage (Note 4)		
Max. Peak Inverse Trigger Voltage	200	Volts
Max. Anode Delay Time (Note 5)	0.6	Microsecond
Max. Anode Delay Time Drift	0.15	Microsecond
Max. Time Jitter (Note 6)	0.03	Microsecond (initial)
	0.04	u/Second (end of life)
Ambient Temperature	-50° to +90°	Cent.

TYPICAL OPERATION AS PULSE MODULATOR, DC RESONANT CHARGING:

Peak Network Voltage	8.0	Kilovolts
Pulse Repetition Rate	2800	Pulses/second
Pulse Length	.25	Microsecond
Pulse Forming Network Impedance	119	Ohms
Trigger Voltage	175	Volts
Peak Power Output (Resistive Load 92% Zn)	130	Kilowatts
Peak Anode Current	35	Amperes
Average Anode Current	.025	Amperes D.C.

Note 1:

Cooling is permitted. However, there shall be no air blast directly on the bulb.

Note 2:

In pulsed operation, the peak inverse voltage, exclusive of a spike of 0.05 microsecond maximum duration, shall not exceed 2.5 KV during the first 25 microseconds after the pulse.

Note 3:

The root mean square anode current shall be computed as the square root of the product of the peak current and the average current.

NOTE 4:

THE VOLTAGE BETWEEN GRID AND CATHODE TERMINALS OF THE SOCKET WITH THE TUBE REMOVED SHOULD HAVE THE FOLLOWING CHARACTERISTICS:

A.	VOLTAGE	175-250 VOLTS
B.	DURATION	2 MICROSECONDS (AT 70% POINTS)
C.	SOURCE IMPEDANCE	1500 OHMS (MAX.)
D.	RATE OF RISE	200 VOLTS/MICROSECOND (MIN.)

THE LIMITS OF ANODE TIME DELAY AND ANODE TIME JITTER ARE BASED ON THE MINIMUM TRIGGER. USING THE HIGHEST PERMISSIBLE TRIGGER VOLTAGE AND LOWEST TRIGGER SOURCE IMPEDANCE MATERIALLY REDUCES THESE VALUES BELOW THE LIMITS SPECIFIED.

NOTE 5:

THE TIME OF ANODE DELAY IS MEASURED BETWEEN THE 26 PERCENT POINT ON THE RISING PORTION OF THE UNLOADED GRID VOLTAGE PULSE AND THE POINT AT WHICH EVIDENCE OF ANODE CONDUCTION FIRST APPEARS ON THE LOADED GRID PULSE.

NOTE 6:

TIME JITTER IS MEASURED AT THE 50 PERCENT POINT ON THE ANODE CURRENT PULSE.

ADDITIONAL INFORMATION FOR SPECIFIC APPLICATIONS CAN BE OBTAINED FROM THE:

ELECTRON TUBE APPLICATIONS SECTION
ITT COMPONENTS DIVISION
POST OFFICE BOX 412
CLIFTON, NEW JERSEY

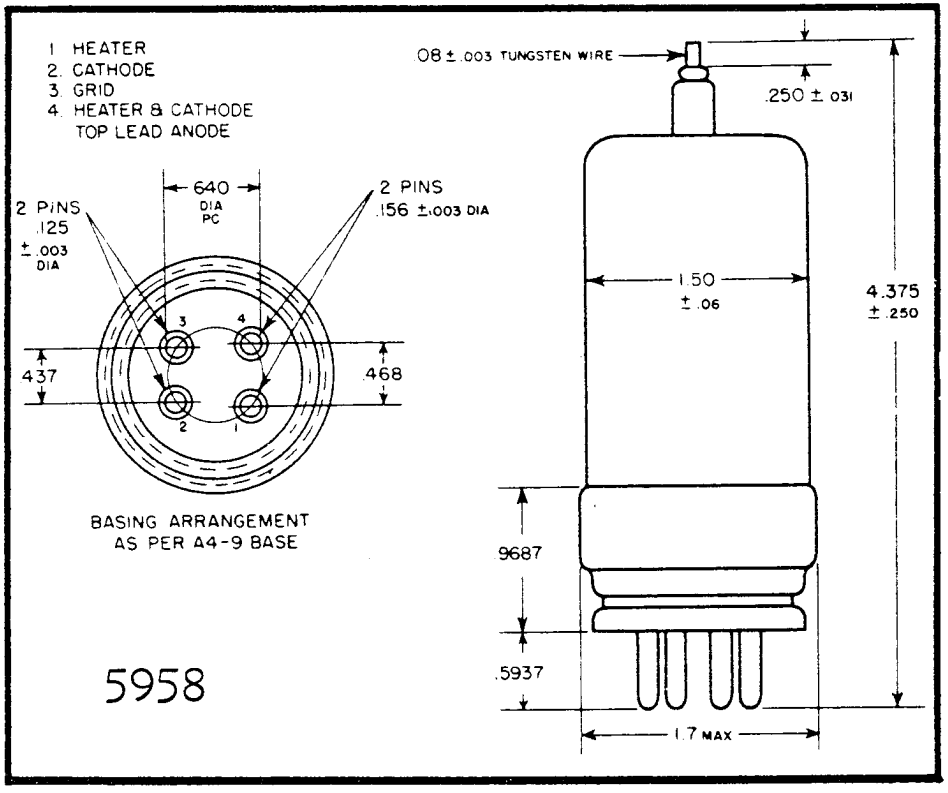
1. HEATER
2. CATHODE
3. GRID
4. HEATER & CATHODE
TOP LEAD ANODE
2 PINS
.125
±.003
DIA
.640
DIA
PC
2 PINS
.156 ±.003 DIA
.437
.468
BASING ARRANGEMENT
AS PER A4-9 BASE
.08 ± .003 TUNGSTEN WIRE
.250 ± .031
1.50
± .06
4.375
± .250
.9687
.5937
1.7 MAX
5958

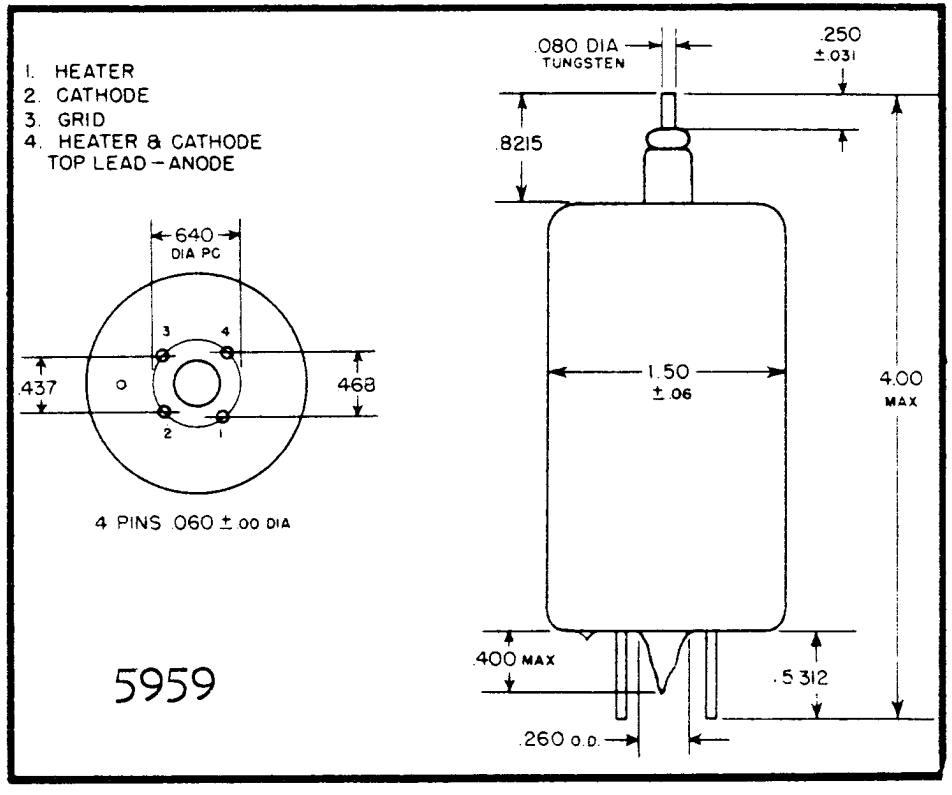
1. HEATER
2. CATHODE
3. GRID
4. HEATER & CATHODE
TOP LEAD – ANODE
.640
DIA PC
.437
.468
4 PINS .060 ± .00 DIA
.080 DIA
TUNGSTEN
.250
±.031
.8215
1.50
± .06
4.00
MAX
.400 MAX
.5312
.260 O.D.
5959

ELECTRON TUBE DEPARTMENT ■ COMPONENTS DIVISION
INTERNATIONAL TELEPHONE AND TELEGRAPH CORPORATION, CLIFTON, NEW JERSEY

KUTHE
6130
HYDROGEN
THYRATRON

DESCRIPTION:

THE 6130 IS A UNIPOTENTIAL CATHODE, THREE ELEMENT HYDROGEN FILLED THYRATRON DESIGNED FOR NETWORK DISCHARGE SERVICE. IN SUCH SERVICE IT IS SUITABLE FOR PRODUCING PULSE OUTPUTS OF 55 KW AS AN AVERAGE POWER LEVEL OF MORE THAN 65 WATTS.

THE ELECTRICAL CHARACTERISTICS OF THE 6130 ARE IDENTICAL WITH THOSE OF THE 3C45. A SPECIAL ANODE TOP CAP INSULATOR IS INSTALLED TO PERMIT OPERATION AT HIGH ALTITUDE.

ELECTRICAL DATA, GENERAL:

	Nom.	Min.	Max.	
Heater Voltage	6.3	5.7	6.6	Volts A.C.
Heater Current (At 6.3 Volts)		2.0	2.5	Amperes
Minimum Heating Time			2	Minutes

MECHANICAL DATA, GENERAL:

Mounting Position		Any
Base	Medium, 4-Pin Phenolic, A49	Low-Loss
Anode Cap	Small Metal C1-1	
Cooling (Note 1)		
Net Weight	2.5	Ounces
Dimensions		See Outline

RATINGS:

Max. Peak Anode Voltage, Forward	3.0	Kilovolts
Max. Peak Anode Voltage, Inverse (Note 2)	3.0	Kilovolts
Min. Anode Supply Voltage	800	Volts d.c.
Max. Peak Anode Current	35	Amperes
Max. Average Anode Current	45	Milliamperes
Max. RMS Anode Current (Note 3)	1.25	Amperes a.c.
Max. epy X ib X prr	0.3×10^9	
Max. Anode Current Rate of Rise	750	Amperes/uSecond
Peak Trigger Voltage (Note 4)		
Max. Peak Inverse Trigger Voltage	200	Volts
Max. Anode Delay Time (Note 5)	0.6	Microsecond
Max. Anode Delay Time Drift	0.15	Microsecond
Max. Time Jitter (Note 6)	0.02	Microsecond (initial)
	0.04	uSecond (end of life)
Ambient Temperature	-50° to +90°	Cent.

TYPICAL OPERATION AS PULSE MODULATOR, DC RESONANT CHARGING:

Peak Network Voltage	3.0	Kilovolts
Pulse Repetition Rate	2500	Pulses/second
Pulse Length	0.5	Microsecond
Pulse Forming Network Impedance	45.2	Ohms
Trigger Voltage	200	Volts
Peak Power Output (Resistive load 92% Zn)	47.2	Kilowatts
Peak Anode Current	35	Amperes
Average Anode Current	.044	Amperes d.c.

Note 1:

Cooling is permitted. However, there shall be no air blast directly on the bulb.

Note 2:

In pulse operation, the peak inverse voltage, exclusive of a spike of 0.5 Microsecond max. duration, shall not exceed 1500 volts during the first 25 microseconds after the pulse.

Note 3:

The root mean square anode current shall be computed as the square root of the product of the peak current and the average current.

NOTE 4:

THE VOLTAGE BETWEEN GRID AND CATHODE TERMINALS OF THE SOCKET WITH THE TUBE REMOVED SHOULD HAVE THE FOLLOWING CHARACTERISTICS:

A.	VOLTAGE	175-250 VOLTS
B.	DURATION	2 MICROSECONDS (AT 70% POINTS)
C.	SOURCE OF IMPEDANCE	1500 OHMS (MAX.)
D.	RATE OF RISE	200 VOLTS/MICROSECOND (MIN.)

THE LIMITS OF ANODE TIME DELAY AND ANODE TIME JITTER ARE BASED ON THE MINIMUM TRIGGER. USING THE HIGHEST PERMISSIBLE TRIGGER VOLTAGE AND LOWEST TRIGGER SOURCE IMPEDANCE MATERIALLY REDUCES THESE VALUES BELOW THE LIMITS SPECIFIED.

NOTE 5:

THE TIME OF ANODE DELAY IS MEASURED BETWEEN THE 26 PERCENT POINT ON THE RISING PORTION OF THE UNLOADED GRID VOLTAGE PULSE AND THE POINT AT WHICH EVIDENCE OF ANODE CONDUCTION FIRST APPEARS ON THE LOADED GRID PULSE.

NOTE 6:

TIME JITTER IS MEASURED AT THE 50 PERCENT POINT ON THE ANODE CURRENT PULSE.

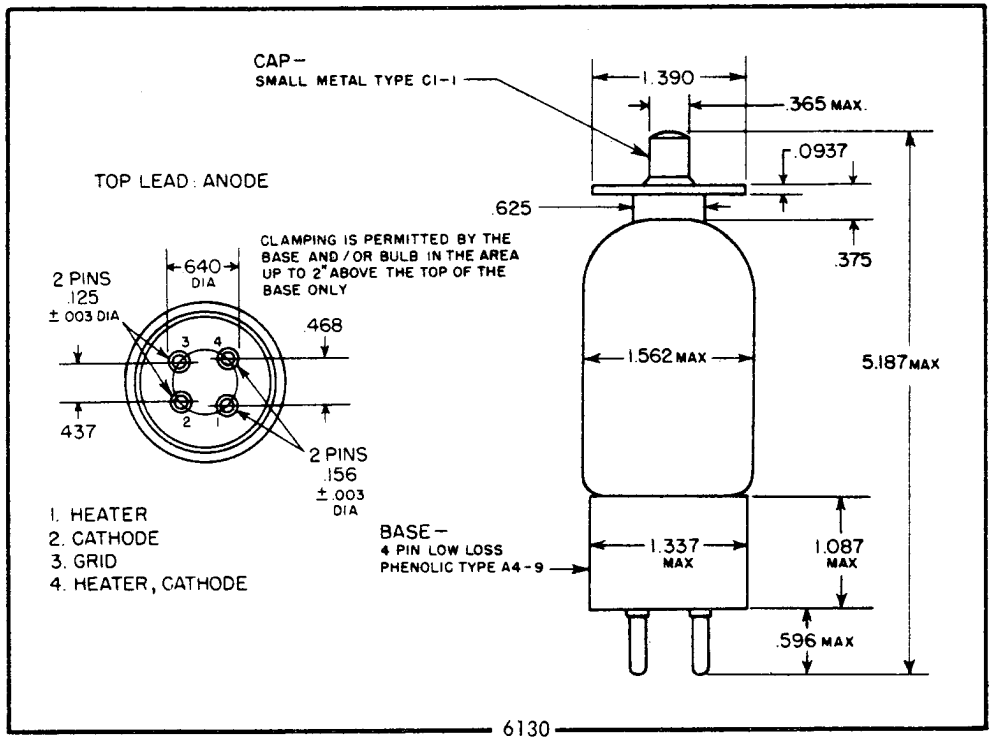
CAP–
SMALL METAL TYPE C1-1
TOP LEAD: ANODE
CLAMPING IS PERMITTED BY THE BASE AND/OR BULB IN THE AREA UP TO 2" ABOVE THE TOP OF THE BASE ONLY
2 PINS .125 ± 003 DIA
.640 DIA
.468
.437
2 PINS .156 ± .003 DIA
1. HEATER
2. CATHODE
3. GRID
4. HEATER, CATHODE
BASE–
4 PIN LOW LOSS PHENOLIC TYPE A4-9
1.390
.365 MAX.
.0937
.625
.375
1.562 MAX
5.187 MAX
1.337 MAX
1.087 MAX
.596 MAX

6130

6411/IC-16-3
IMAGE CONVERTER TUBE
(Enlarged View)

The 6411/IC-16-3 Image Converter Tube has a cathode with sensitivity in the near-infrared portion of the spectrum. Utilizing its ability to make visual an infrared image, its many uses include the inspection of photographic film, the determining of temperature distribution in heated objects, medical and biological research, criminal investigations, high speed photography and in various military operations.

The 6411/IC-16-3 was developed by the Special Purpose Tube Laboratory of the Farnsworth Division of International Telephone and Telegraph Corporation. This laboratory, now a part of ITT Laboratories Division, develops products for manufacture by the Components Division of ITT.

6411/IC-16-3 ELECTRICAL CHARACTERISTICS

	Lower Allowable Limit	*Typical*	*Upper Allowable Limit*	
Electrical Characteristics:				
Cathode to anode voltage (1)		16	16.5	kv
Focus voltage (percentage of anode voltage) (4)	13	14.5	16	percent
Cathode current (3)			2	μa
Maximum dark current to any electrode			0.1	μa
General Characteristics:				
Average cathode current density			0.4	$\mu a/cm^2$
Cathode luminous sensitivity (5) (8)	12	25		μa/lumen
Cathode radiant sensitivity at 8000 Å	0.0012	0.0025		μa/μ watt
Phosphor screen luminous efficiency at 16 kv	30	55		lumen/watt
Infrared conversion index at 16 kv	10			
Image magnification (paraxial)	0.66	0.68	0.70	
Radial image distortion at 9.2 mm from center of cathode		9.3		percent
Resolving power (paraxial) (6)		20		line pairs/mm
Resolving power at 9.2 mm from center of cathode (6)		5		line pairs/mm
Mean background screen brightness (7)		1.5		μ lambert
Useful cathode diameter		0.970		inch
Useful phosphor screen diameter		0.750		inch
Cathode surface	S1 (see characteristic curve)			
Phosphor screen	P20 (aluminized) (see characteristic curve)			

(1) The upper allowable working voltage is specified on the basis of a suitable margin of safety regarding internal glow or flashover. Such glow or flashover invariably causes loss in stability or cathode sensitivity.

(2) Current to the focus electrode is sufficiently small so that it may be disregarded in the design of a voltage divider for electrical focusing.

(3) Averaged over an interval of not greater than 30 seconds.

(4) Approximate voltage required for correct focus.

(5) At 100 volts dc applied between cathode and all other electrodes connected together.

(6) Adjust voltage for equal horizontal and vertical resolution on the axis of symmetry.

(7) Cathode not illuminated; temperature 25 degrees C maximum.

(8) With standard tungsten light source (2870 degrees K color temperature).

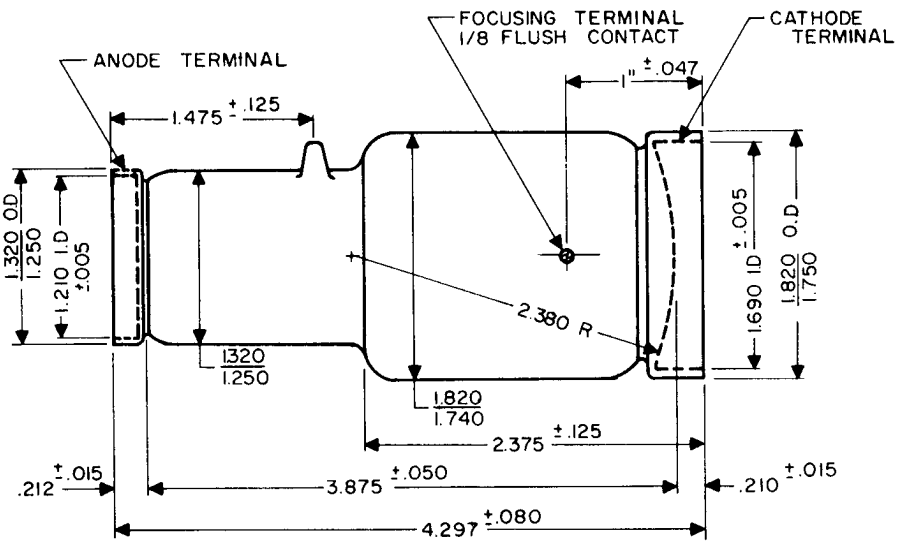

Figure 1: Outline Dimensional Drawing

GENERAL INFORMATION

1. The IC-16-3 normally is used in conjunction with an objective lens and magnifying eyepiece. The inverted image on the cathode is reinverted by the electron optics of the tube so that the image as it appears on the screen or is seen through the eyepiece is erect. The objective may be either refractive or reflective (Schmidt), and should be designed with proper consideration given to the spherical cathode surface. Usually a field flattener lens is used in conjunction with the objective. The eyepiece should be a good quality achromat with a field slightly in excess of the useful phosphor screen area (0.750 inch diameter). A 7-power Hastings triplet will be found reasonably satisfactory for most applications.

2. For the majority of viewing applications, a filtered tungsten lamp is used for irradiating the subject. The visible component is suitably suppressed with one of the readily available filters or with several in combination. (Wratten 87C, 88A, Corning 2540, and others.)

3. It is recommended that the precise internal dimensions of the cathode and anode terminals, indicated in the outline drawing, be used in the tube mounting. This will aid in maintaining alignment of the tube with respect to the optical system when servicing. The glass "tip-off" point is used as an index for location of the focusing terminal.

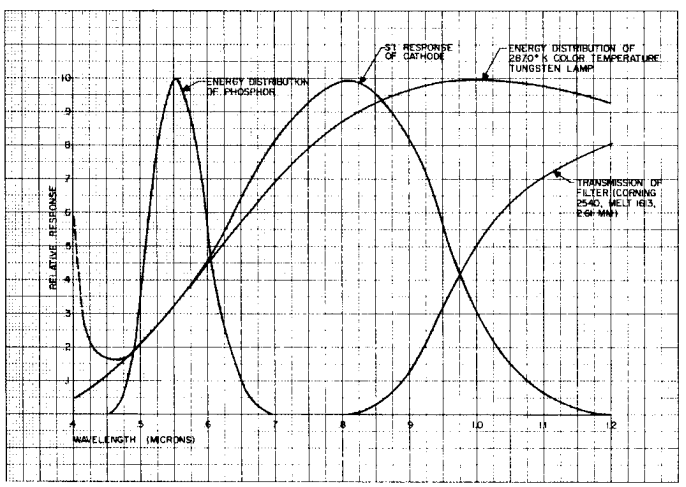

Figure 2: Relative Response Versus Wavelength

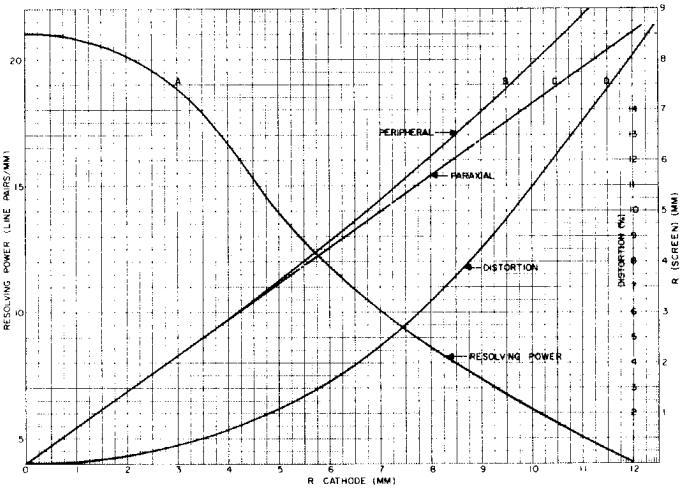

Figure 3: Characteristic Curves

4. In order to prevent the deleterious effect of corona and surface leakage, it is recommended that the IC-16-3 always be operated in a dry atmosphere. This is best realized by enclosing the tube in a reasonably air-tight jacket or envelope provided with a suitable dessicant, such as silica-gel. Coating the envelope with a very thin film of Silicone 400 to prevent condensation of moisture in a continuous film will be found advantageous as an alternative.

5. Consideration should also be given to necessary safety measures associated with operation of high voltage equipment. It is advisable that the tube be housed in a grounded metal envelope. The voltage lead to the tube should be a small coaxial cable; the external conductor in the cable is grounded to both tube housing and power supply. It will be found advantageous in most applications to include the voltage divider within the grounded metal tube housing.

6. While the tube is normally operated with the cathode at ground potential, this is not necessarily a requirement.

DEFINITIONS PERTAINING TO IMAGE CONVERTER TUBES

Luminous efficiency:

The quotient of the total luminous output divided by the electrical power input. Since this is a function of phosphor screen voltage, this voltage must be specified.

Radiant efficiency:

The quotient of the total radiant output divided by the electrical power input over a specified operating voltage range.

Infrared conversion index:

The quotient of the exit luminous flux divided by the luminous equivalent of the incident infrared flux. The incident infrared flux is that originating from a tungsten lamp with a lead or lime glass lamp envelope (coiled or coiled-coil tungsten filament) operated at a color temperature of 2870 degrees K and transmitted by a 2540 Corning filter (melt 1613, thickness 2.61 mm). Non-filtered light on the cathode must not exceed 0.1 lumen. Luminous equivalent is defined as the product of the luminous flux and the transmission factor as determined with a 2870 degree K tungsten source and a receiver with standard S1 response.

$$\text{Infrared conversion index (c.i.)} = \frac{F_e}{F_i\ T}$$

where F_e = total luminous flux from phosphor screen

F_i = luminous flux incident on filter

T = transmission factor of filter

$$T = \frac{\int_0^\infty J_\lambda T_\lambda R_\lambda d_\lambda}{\int_0^\infty J_\lambda R_\lambda d_\lambda}$$

J_λ = Power output of the standard lamp at wavelength per unit wavelength interval

T_λ = Transmission of filter at wavelength

R_λ = Spectral response at wavelength

Distortion:

The percentage departure of the radial distance of an actual point on the screen from the radial distance of the corresponding point of the object on the cathode multiplied by the paraxial magnification. For example, (see figure 3), an illuminated point 7 mm from the center of the cathode would theoretically be reproduced as a point 5.0 mm from the center of the screen, however, because of the 4-1/2 percent distortion at this distance from the center of the cathode (see curve D), the actual point will appear 5.2 mm from the center of the screen. The magnification at any point on curve B is the slope of the curve at that point.

Resolving power:

The number of equally spaced parallel opaque lines per unit length (with spacing equal to the width of the lines) at the cathode which may be observed in the resulting screen image. (See curve A, figure 3).

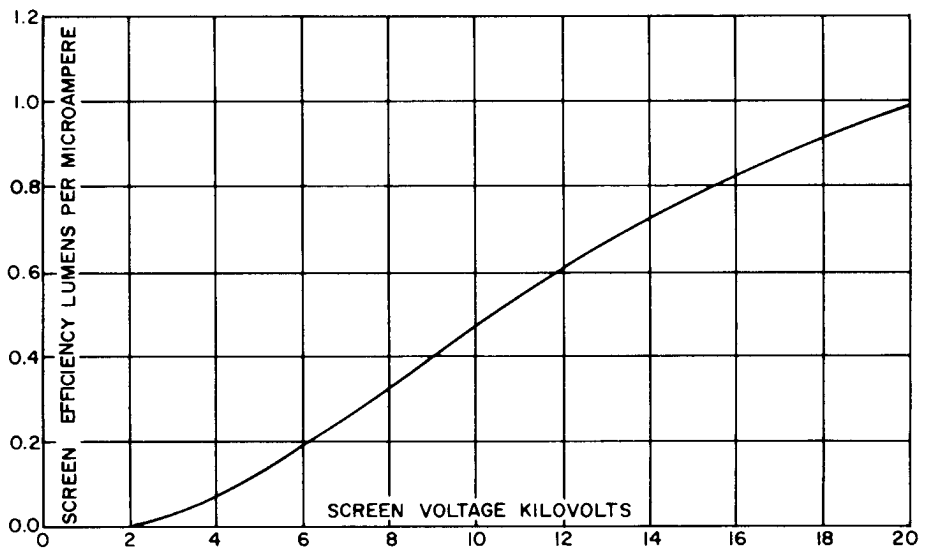

Figure 4: Screen Voltage Versus Screen Efficiency

Address technical inquiries to: Director, Components & Instrumentation Laboratory, ITT Laboratories, 3702 E. Pontiac Street, Fort Wayne, Ind.

FORM ITTL 6411 1M 8-58

ITT LABORATORIES
FORT WAYNE, INDIANA

INFRARED IMAGE CONVERTER TUBE
TYPE 6411

A PRODUCT OF ITT LABORATORIES

Nutley, N. J. • Fort Wayne, Ind. • Chicago, Ill. • San Fernando and Palo Alto, Calif.

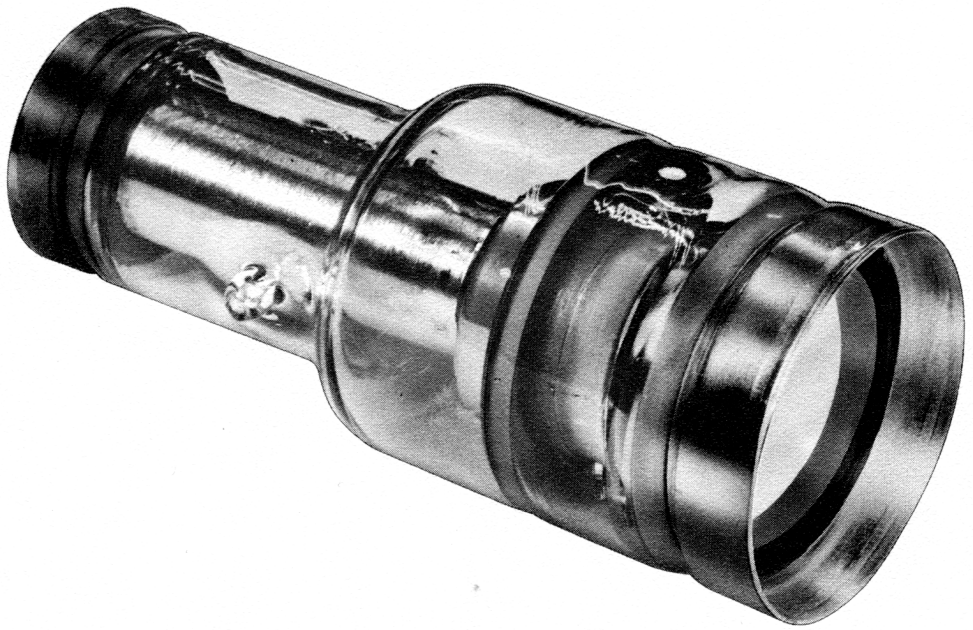

The 6411 Image Converter Tube changes infrared radiation to a visible image.

The 6411 Image Converter Tube has a cathode sensitivity in the near-infrared portion of the spectrum. It can be used in any application where it is necessary or desirable to "see in the dark". Its many uses include the inspection of photographic film, the determination of temperature distribution in heated objects, medical and biological research, criminal investigations, high speed photography, and in various military operations. The Image Converter Tube is used with an objective lens and magnifying eyepiece. An inverted image on the cathode is reinverted by the electron optics of the tube so that the image as it appears on a screen or seen through an eyepiece is correct. For the majority of viewing applications a filtered tungsten lamp is used for irradiating the subject.

For further information and detailed technical specifications write to the Director, Components and Instrumentation Laboratory, ITT Laboratories, 3702 E. Pontiac St., Fort Wayne, Indiana.

engineering TUBE DATA

Kuthe

ITT Components Division

TYPE 6587 HYDROGEN THYRATRON

GENERAL DATA

DESCRIPTION:

The 6587 is a unipotential cathode, three element hydrogen filled thyratron designed for network discharge service. In such service it is suitable for producing pulse outputs of more than 2 megawatts at an average power level of more than 1.6 KW.

The special features of the 6587 include an internal hydrogen reservoir connected across the filament and capable of producing and maintaining the hydrogen pressure throughout the useful life of the tube. Further features are the high peak voltage and current ratings and the ruggedized construction.

Electrical Data, General	**Nom.**	**Min.**	**Max.**
Heater voltage	6.3	5.9	6.7 Volts a.c.
Heater current. E_h=6.3 volts		9.6	11.6 Amperes
Minimum heating time	3 Minutes		

Mechanical Data, General

Mounting position	Any
Base	Super Jumbo 4-pin with Bayonet A4-18 with ceramic insert
Anode Cap	Medium Metal, C1-5 with corona flare
Cooling	Note 1
Net Weight	10 Ounces

Dimensions

See outline drawing

Ratings

Max. peak anode voltage, forward	16.0 Kilovolts
Max. peak anode voltage, inverse (Note 2)	16.0 Kilovolts
Min. anode supply voltage	3.5 Kilovolts d.c.
Max. peak average anode current	325 Amperes
Max. average anode current	225 Milliamperes
Max. RMS anode current (Note 3)	6.3 Amperes a.c.
Max. epy x ib x prr	3.9×10^9
Max. anode current rate of rise	1500 Amperes/μsecond
Peak trigger voltage	Note 4
Max. peak inverse trigger voltage	200 Volts

	Initial Limit	**End of Life Limit**
Max. anode delay time (Note 5)	0.6	0.6 Microsecond
Max. anode delay time drift	0.1	0.1 Microsecond
Max. time jitter (Note 6)	0.005	0.01 Microsecond

Ambient temperature	—50° to +90° Cent.
Shock rating	24° Navy (Flyweight) Shock machine

Printed in U.S.A. 1-60

(continued)

ITT COMPONENTS DIVISION
INTERNATIONAL TELEPHONE AND TELEGRAPH CORPORATION
P. O. BOX 412, CLIFTON, NEW JERSEY

Typical Operation as Pulse Modulator,

DC Resonant Charging

Peak network voltage	16.0	12.0 Kilovolts
Pulse repetition rate	1000	2500 Pulses/second
Pulse length	1.0	0.4 Microsecond
Pulse forming network impedance	48	48 Ohms
Trigger voltage	200	200 Volts
Peak power output (Resistive load 92% Zn)	1.31	.736 Megawatt
Peak anode current	175	130 Amperes
Average anode current	0.175	0.13 Amperes d.c.

Note 1

Cooling permitted. However, there shall be no air blast directly on the bulb.

Note 2

The peak inverse anode voltage shall not exceed 5.0 kv during the first 25 microseconds after the pulse.

Note 3

The root mean square anode current shall be computed as the square root of the product of the peak current and the average current.

Note 4

The Driver pulse, measured at the tube socket with the thyratron grid disconnected, shall have the following characteristics:

A.	Voltage	200-300 Volts
B.	Duration	2 Microseconds (at 70% points)
C.	Rate of rise	200 Volts/microsecond (min.)
D.	Impedance	50-500 Ohms

The limits of anode time delay and anode time jitter are based on the minimum trigger. Using the highest permissible trigger voltage and lowest trigger source impedance materially reduces these values below the limits specified.

Note 5

The time of anode delay is measured between the 26 percent point on the rising portion of the unloaded grid voltage pulse and the point at which evidence of anode conduction first appears on the loaded grid pulse.

Note 6

Time jitter is measured at the 50 percent point on the anode current pulse.

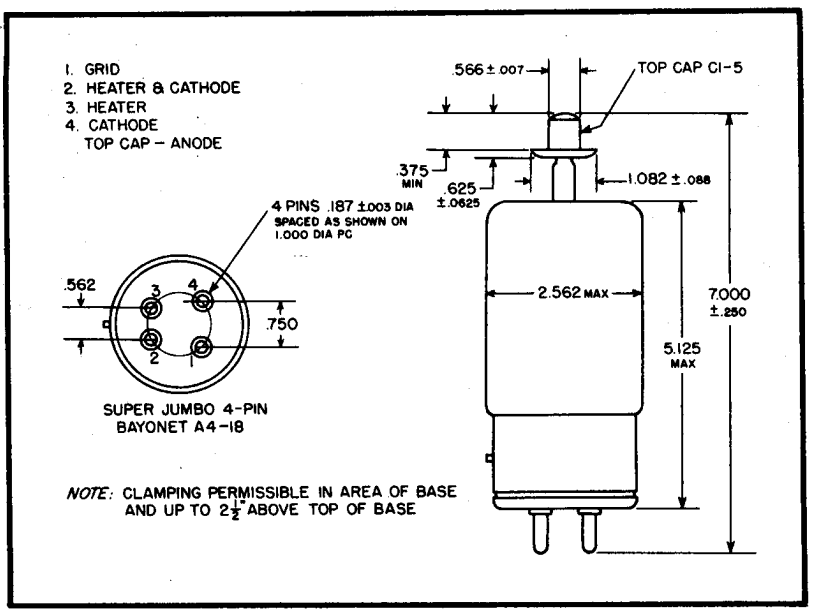

ITT LABORATORIES
FORT WAYNE, INDIANA

IMAGE DISSECTOR HIGH-RESOLUTION TV CAMERA TUBE

TYPE 6656

A PRODUCT OF ITT LABORATORIES

Nutley, N. J. • Fort Wayne, Ind. • Chicago, Ill. • San Fernando and Palo Alto, Calif.

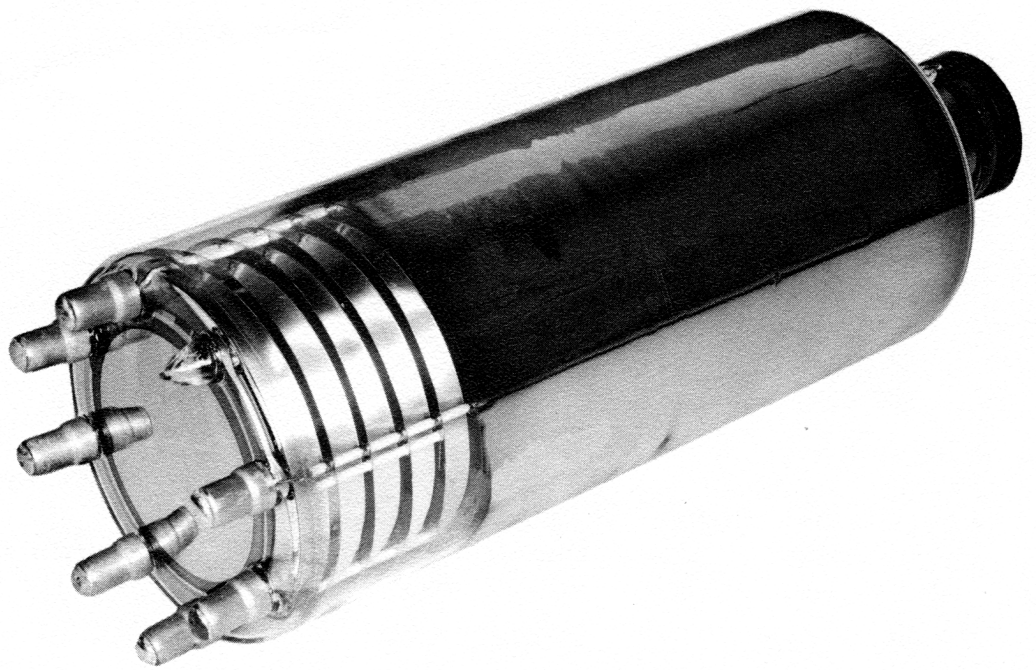

Operating on the photoemission principle the 6656 Image Dissector Tube has extremely high resolution and long life.

The 6656 Image Dissector is a television camera tube that is adaptable to any application where extremely high resolution and good tonal rendition are important. The output signal varies linearly with the light intensity over a considerable range. The Image Dissector is readily adaptable to the needs of each particular user by simply providing the multiplier section with an aperture which is ideal for the intended application. The Image Dissector employs a translucent photocathode of cesium-oxygen-silver which has an S-1 spectral response, making it most sensitive to red and infrared radiation. A similar tube the 6657 is also available which uses a translucent photocathode of cesium-antimony and has an S-9 spectral response.

For further information and detailed technical specifications write to the Director, Components and Instrumentation Laboratory, ITT Laboratories, 3700 E. Pontiac St., Fort Wayne, Indiana.

engineering
TUBE DATA
Kuthe
ITT Components Division

TYPE 6777 HYDROGEN THYRATRON

GENERAL DATA

DESCRIPTION:

The 6777 is a unipotential cathode, three element, hydrogen filled thyratron with reservoir, designed for network discharge service. In such service it is suitable for producing pulse outputs of more than 120 KW at an average power level of more than 150 watts.

The special features of the 6777 include the high peak voltage rating and the very compact size as well as the inclusion of a hydrogen reservoir for long stable tube life.

Electrical Data, General	**Nom.**	**Min.**	**Max.**
Heater voltage	6.3	5.9	6.7 Volts a.c.
Heater current. E_h=6.3 volts		2.2	2.7 Amperes
Minimum heating time	3 Minutes		

Mechanical Data, General

Mounting position	Any
Base	Medium, 4-pin low-loss phenolic, A4-9
Anode cap	Small metal, C1-1
Cooling	Note 1
Net weight	3.5 Ounces

Dimensions

See outline drawing

Ratings

Max. peak anode voltage, forward	8.0 Kilovolts
Max. peak anode voltage, inverse (Note 2)	8.0 Kilovolts
Min. anode supply voltage	2.5 Kilovolts d.c.
Max. peak anode current	35 Amperes
Max. average anode current	45 Milliamperes
Max. RMS anode current (Note 3)	1.25 Amperes d.c.
Max. epy x ib x prr	0.75 x 10^9
Max. anode current rate of rise	1200 Amperes/μsecond
Peak trigger voltage	Note 4
Max. peak inverse trigger voltage	200 Volts
Max. anode delay time (Note 5)	0.6 Microsecond
Max. anode delay time drift	0.15 Microsecond
Max. time jitter (Note 6)	0.03 Microsecond (initial) 0.04 μsecond (end of life)
Ambient temperature	—50° to +90° Cent.

Printed in U.S.A. 1-60

(Continued)

ITT COMPONENTS DIVISION
INTERNATIONAL TELEPHONE AND TELEGRAPH CORPORATION
P. O. BOX 412, CLIFTON, NEW JERSEY

Typical Operation as Pulse Modulator, DC Resonant Charging

Peak network voltage	8.0 Kilovolts
Pulse repetition rate	2800 Pulses/second
Pulse length	0.25 Microsecond
Pulse forming network impedance	119 Ohms
Trigger voltage	175 Volts
Peak power output (Resistive load 92% Zn)	130 Kilowatts
Peak anode current	35 Amperes
Average anode current	.025 Amperes d.c.

Note 1

Cooling of the anode lead is permissible but there shall be no air blast directly on the bulb.

Note 2

The peak inverse voltage, exclusive of a spike of 0.05 microsecond max. duration, shall not exceed 3 KV during the first 25 microseconds after the pulse.

Note 3

The root mean square anode current shall be computed as the square root of the product of peak current and the average current.

Note 4

The voltage between grid and cathode terminals of the tube, with the grid of the tube disconnected should have the following characteristics:

A.	Voltage	175-250 Volts
B.	Duration	2.0 Microseconds (at 70% points)
C.	Time of rise	0.5 Microseconds (max.)
D.	Impedance	1500 Ohms (max.)

The limits of anode time delay and anode time jitter are based on the minimum trigger. Using the highest permissible trigger voltage and lowest trigger source impedance materially reduces these values below the limits specified.

Note 5

The time of anode delay is measured between the 26 percent point on the rising portion of the unloaded grid voltage pulse and the point at which evidence of anode conduction first appears on the loaded grid pulse.

Note 6

Time jitter is measured at the 50 percent point on the anode current pulse.

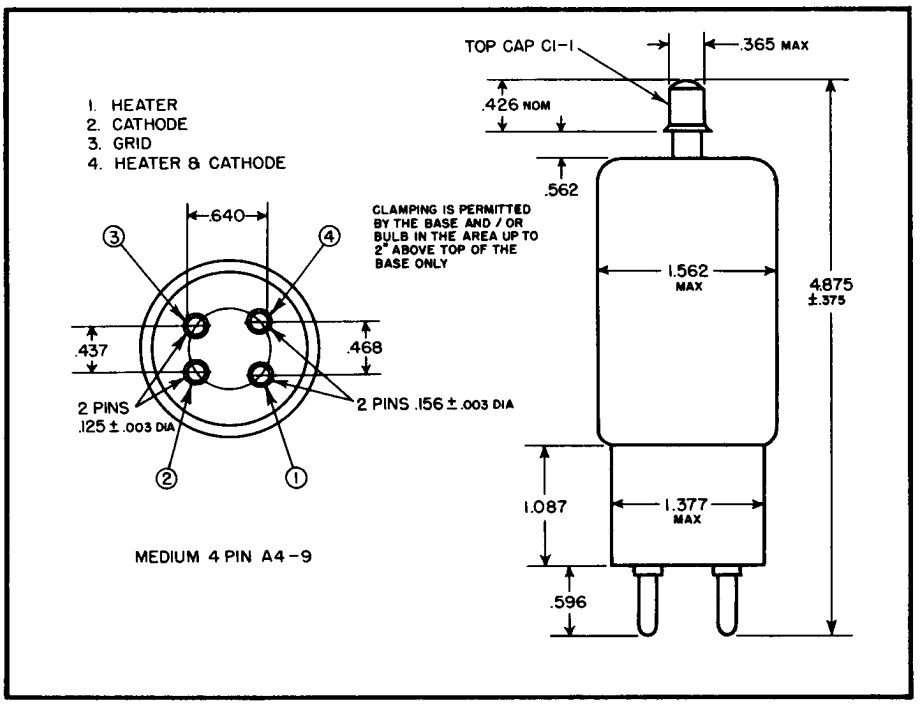

ITT LABORATORIES
FORT WAYNE, INDIANA

MULTIPLIER PHOTOTUBE

TYPE 6836

A PRODUCT OF ITT LABORATORIES

Nutley, N. J. • Fort Wayne, Ind. • Chicago, Ill. • San Fernando and Palo Alto, Calif.

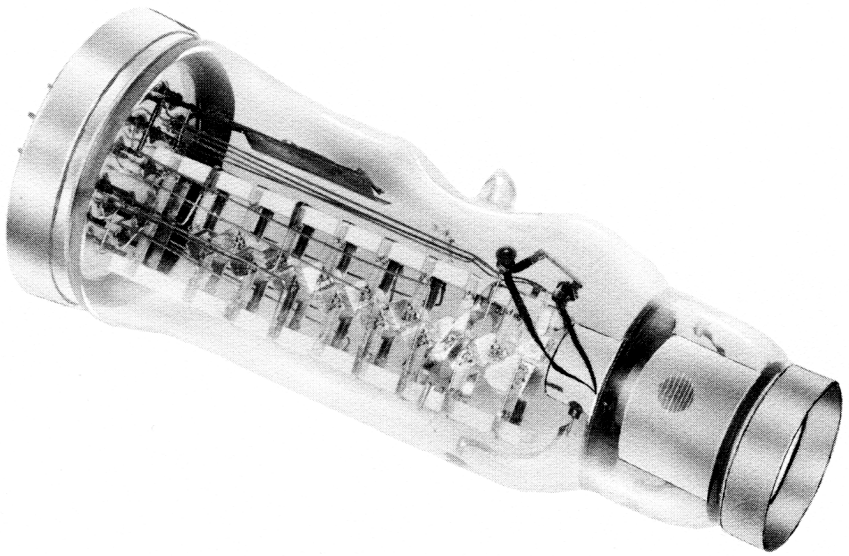

The Multiplier Phototube type 6836 is a 16-stage multiplier of the end-window type having an S-1 spectral sensitivity characteristic. To minimize cathode noise the active cathode in this tube is reduced to a central area of approximately ⅛-inch diameter. The tube is capable of detecting and measuring extremely weak sources of infrared radiation and will find its greatest application as a means of making photometric measurements in the region from 7000 to 12,000 angstroms wavelength. Because of its high signal-to-noise ratio this tube has found particular favor with the observatories in their work with faint and far distant celestial objects.

For further information and detailed technical specifications write to the Director, Components and Instrumentation Laboratory, ITT Laboratories, 3700 E. Pontiac St., Fort Wayne, Indiana.

ITT LABORATORIES
FORT WAYNE, INDIANA

IMAGE CONVERTER TUBE

TYPE 6839

A PRODUCT OF ITT LABORATORIES

Nutley, N. J. • Fort Wayne, Ind. • Chicago, Ill. • San Fernando and Palo Alto, Calif.

The Image Converter Tube acts as an electronic shutter in photographing extremely short duration events such as explosion phenomena

The 6839 Image Converter Tube operates as an electronic shutter when pulsed. The tube contains an electron lens, a photocathode (the source of electrons), and a phosphor screen transducer which converts the electrical energy into light. The tube acts as a diode, having two consecutive cylinders forming the lens system, with the electrons from the cathode being electrostatically focused on the phosphor screen by the tube geometry. An external lens focuses the subject object on the cathode of the tube and when a short duration voltage pulse is applied to the tube at some predetermined time, the incident image is reproduced on the phosphor screen. Any short duration event is then instantaneously recorded on photographic film facing the phosphor screen.

For further information and detailed technical specifications write to the Director, Components and Instrumentation Laboratory, ITT Laboratories, 3702 E. Pontiac St., Fort Wayne, Indiana.

FORCED AIR COOLED V.H.F. POWER TRIODE
Code: 6961 (CV5239)

The 6961 is designed for use as a v.h.f. amplifier, industrial heating oscillator or a.f. amplifier. It is capable of operation up to 85MHz.

CATHODE

Thoriated tungsten filament

Filament voltage (Note 1)	12,6	V
Filament current, nominal	33	A

The connection to the mid-point of the filament is intended for cathode connection but should not be used to carry filament current. At frequencies above 30MHz the filament pins should be decoupled to the centre tap by suitable capacitors.

Note 1. The filament has been designed to tolerate temporary fluctuations of supply voltage of +5% and -10%.

CHARACTERISTICS

Mutual conductance	(Measured at V_a = 6kV	15	mA/V
Amplification factor	I_a = 1A)	32	

DIRECT INTERELECTRODE CAPACITANCES

Grid to anode	11	pF
Grid to filament	16	pF
Anode to filament	0,3	pF

MECHANICAL DATA

Dimensions	As shown in outline drawing, Figure 3.
Mounting position	Vertical, anode upwards or downwards.

ITT Components Group Europe
Standard Telephones and Cables Limited
Valve Product Division, Brixham Road, Paignton, Devon
Telephone: Paignton 50762 (STD Code 0803) Telex: 42830

ITT COMPONENTS

© International Telephone and Telegraph Corporation. All rights reserved.

MAXIMUM RATINGS AND TYPICAL OPERATING CONDITIONS

CLASS C. TELEGRAPHY OR F.M. TELEPHONY

Maximum Ratings

Direct anode voltage	7,2	kV
Direct anode current	2,2	A
Direct anode dissipation	6	kW
Direct grid dissipation	250	W
Direct grid current	600	mA
Negative grid bias	1,25	kV
Peak cathode current	14	A
Frequency for above ratings	30	MHz

Typical Operating Conditions (Frequency 30MHz)

Direct anode voltage	5	5	6	6	6,5	6,5	kV
Direct grid voltage	-300	-300	-400	-400	-450	-450	V
Direct anode current	2	2	2	2	2	2	A
Peak r.f. grid voltage	660	700	780	820	820	850	V
Direct grid current	500	600	500	600	500	600	mA
Anode dissipation	2,9	2,7	3,5	2,8	3,5	3,0	kW
Power output	7,1	7,3	8,5	9,2	9,5	10	kW
Power into load	5,7	5,8	7,0	7,4	7,6	8	kW
Drive power	297	378	350	443	370	460	W

CLASS C. TELEPHONY (Carrier conditions for use with 100% modulation)

Maximum Ratings

Direct anode voltage	5,5	kV
Direct anode current	1,8	A
Direct anode dissipation	4	kW
Direct grid dissipation	250	W
Direct grid current	600	mA
Negative grid bias	1,25	kV
Peak cathode current	12	A
Frequency for above ratings	30	MHz

CLASS C. TELEPHONY (continued)

Typical Operating Conditions (Frequency 30MHz)

Direct anode voltage	4	5	5	kV
Direct grid voltage	-300	-400	-400	V
Direct anode current	1,6	1,4	1,6	A
Peak r.f. grid voltage	680	730	800	V
Direct grid current	600	500	500	mA
Anode dissipation	1,4	1,4	1,6	kW
Power output	5	5,6	6,4	kW
Power into load at 80% transfer efficiency	4	4,5	5,1	kW
Drive power	367	328	432	W
Modulator power for 100% modulation depth	3,2	3,5	4,0	kW

CLASS C. INDUSTRIAL OSCILLATOR

(Anode supply from 3-phase half-wave rectifier without filter)

Maximum Ratings

	Up to 55MHz	Up to 85MHz	
Direct anode voltage	7	6,5	kV
Direct anode current	2	2	A
Direct anode dissipation	6	6	kW
Direct grid dissipation	250	250	W
Direct grid current			
loaded	500	500	mA
unloaded	700	700	mA
Negative grid bias	1,25	1,25	kV
Peak cathode current	11	11	A
Grid-filament resistance	10	10	kΩ

Typical Operating Conditions

Maximum frequency	55	85	85	MHz
Direct anode voltage	6,5	6	5	kV
Direct anode current	1,7	1,5	1,7	A
Direct grid current				
loaded	500	400	450	mA
unloaded	700	700	700	mA
Grid resistor	900	1 000	850	Ω
Drive power, approx.	350	300	350	W
Anode dissipation	2,4	2,7	2,4	kW
Power output	8,6	6,5	6,1	kW
Power into load (Note 2)	7	5,5	5	kW

Note 2. Load power = $(P_{out} - P_{drive}) \times$ transfer efficiency (approx. 85%).

CLASS B. A.F. AMPLIFIER (for balanced 2-tube operation)

Maximum Ratings (per tube)

Direct anode voltage	7,2	kV
Direct anode current	2,8	A
Direct anode dissipation	6	kW
Direct grid dissipation	250	W
Direct grid current	600	mA
Peak cathode current	10	A
Grid-filament resistance	15	kΩ

Typical Operating Conditions (2 tubes in push-pull)

Direct anode voltage	4	5	5	7	kV
Direct grid voltage	-135	-165	-165	-250	V
Direct anode current					
zero signal	2 x 100	2 x 150	2 x 150	2 x 200	mA
max. signal	2 x 1,25	2 x 1,1	2 x 1,25	2 x 2	A
Peak grid-to-grid voltage	630	483	588	854	V
Direct grid current	2 x 360	2 x 220	2 x 330	2 x 530	mA
Anode dissipation	2 x 1,45	2 x 1,5	2 x 1,7	2 x 4	kW
Efficiency	71	72,5	72,5	71,5	%
Power output	7,1	8	9	20	kW
Drive power	2 x 140	2 x 65	2 x 130	2 x 310	W
Anode-to-anode resistance	3,8	5,5	4,8	4,15	kΩ

COOLING REQUIREMENTS

The tube must not be operated without a heat dissipating connector on the filament mid-point pin.

Maximum filament seal temperature is 210°C
Maximum anode and grid seal temperature 180°C

In order to keep within the temperature limits it may be necessary to direct a flow of air on to the filament and grid seals.

The amount of forced-air-cooling required by the 6961 tube depends upon its height above sea level, the ambient air temperature and the anode dissipation. Typical data are given in the following table.

Anode dissipation	Height above sea level		Max. inlet temperature	Min. rate of air flow		Pressure drop between inlet and outlet	
(kW)	(m)	(ft)	(°C)	m^3/min	ft^3/min	mm. water	in. water
2	0	0	35	4,8	169	20	0,79
2	0	0	45	5,7	201	25	0,98
2	1 500	4 920	35	5,7	201	23	0,9
2	3 000	9 840	25	6,1	215	23	0,9
3,5	0	0	35	6,2	219	32	1,26
3,5	0	0	45	7,3	258	42	1,65
3,5	1 500	4 920	35	7,3	258	36	1,42
3,5	3 000	9 840	25	7,8	275	36	1,42
6	0	0	35	9,2	325	68	2,68
6	0	0	45	10,7	378	91	3,58
6	1 500	4 920	35	11,2	396	81	3,19
6	3 000	9 840	25	11,7	413	80	3,15

Fig. 1. Typical Anode and Grid Characteristics

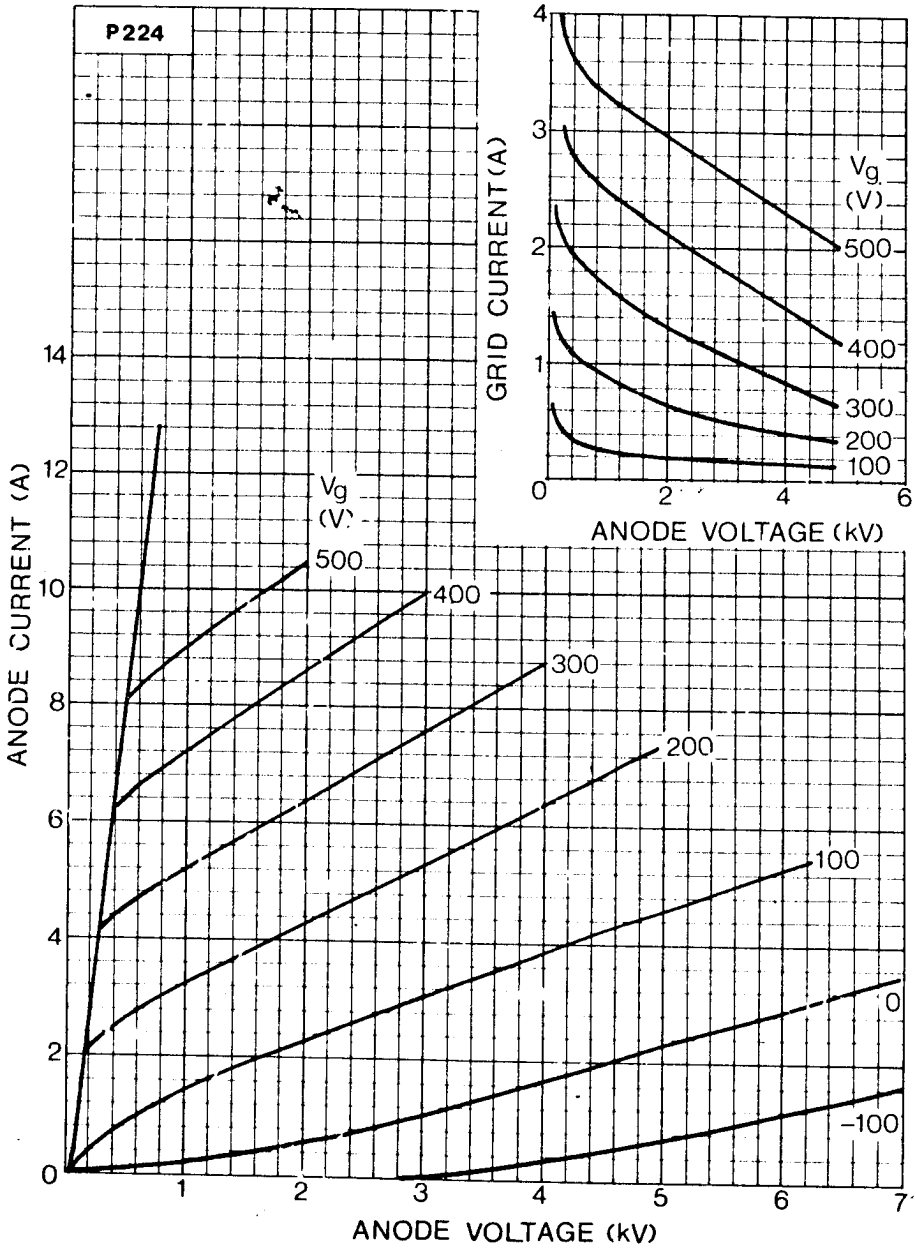

Fig. 2. Typical Constant Current Characteristics

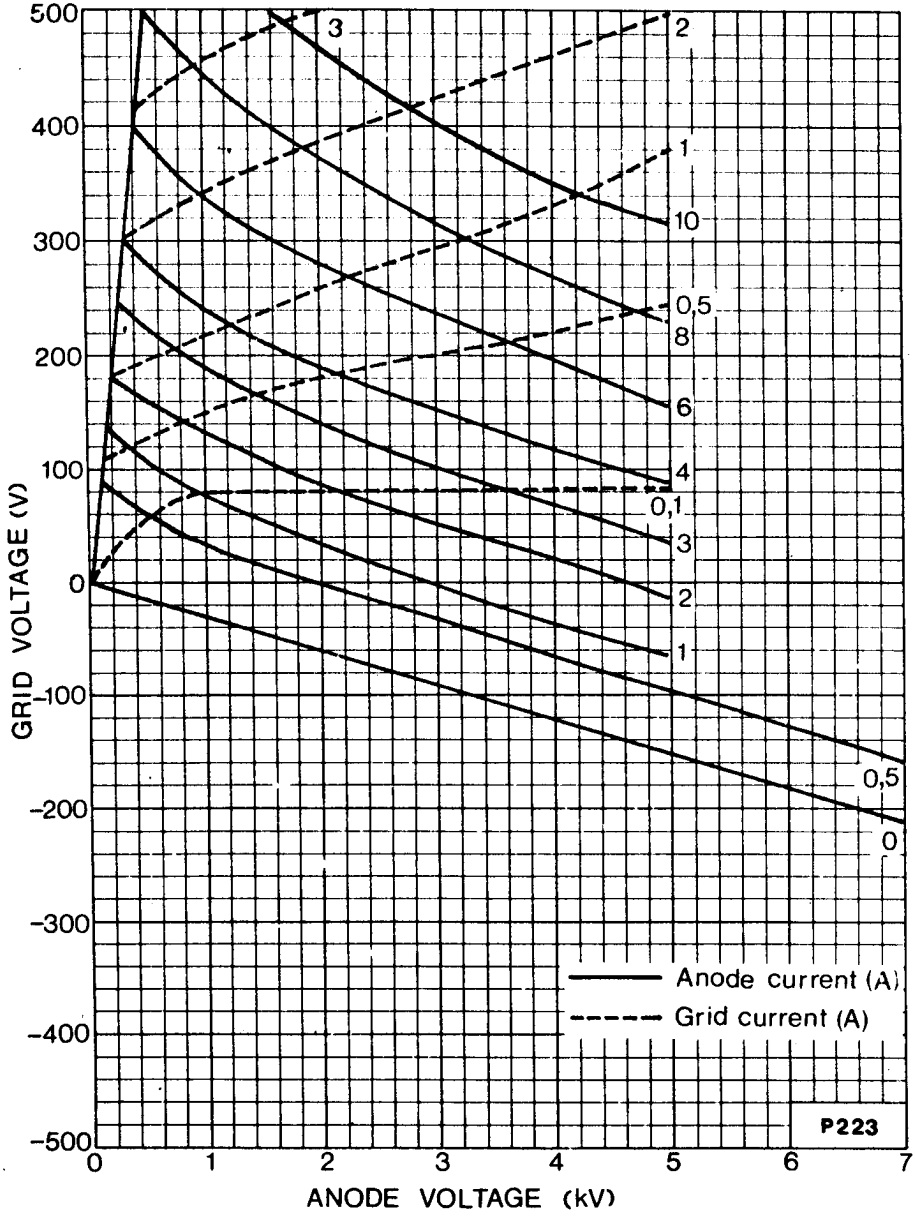

Fig. 3. Outline of 6961 Tube

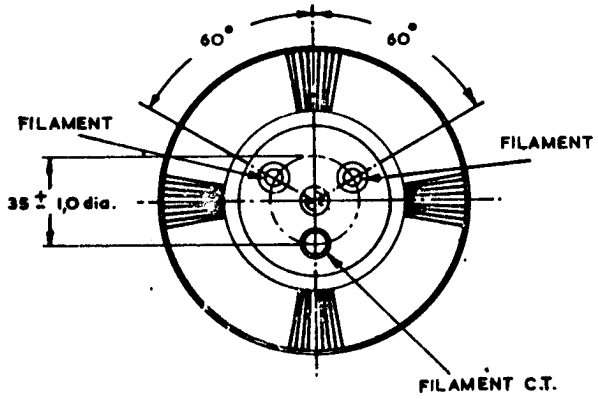

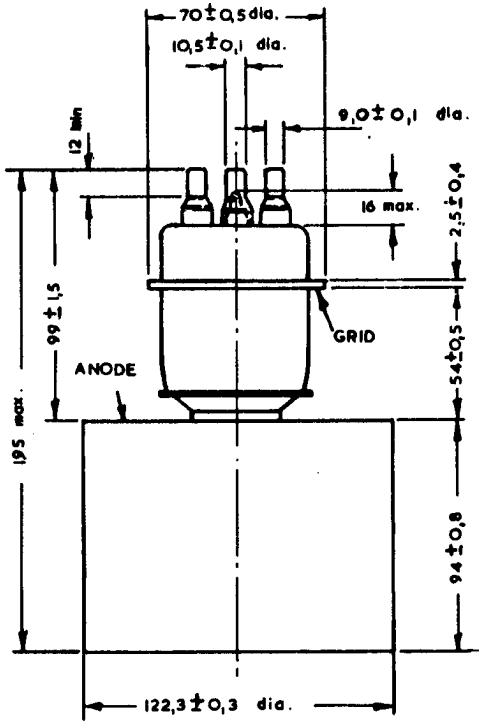

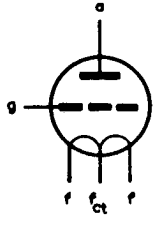

DIMENSIONS ARE MILLIMETRES

from JEDEC release #3751, June 4, 1962

Image Converter Tube Type 7177/IC-6

ELECTRONIC CAMERA TUBES FEATURING LOW LIGHT LEVEL INTEGRATION AND CONTRAST ENHANCEMENT FOR USE IN HIGH-SPEED PHOTOGRAPHY, PULSED LIGHT SYSTEMS, AND HIGH-SPEED SINGLE-EVENT STUDIES.

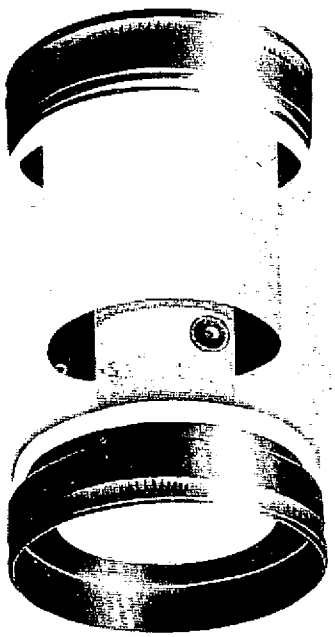

The 7177/IC-6 Image Converter Tube is of the unipotential or fixed focus type. Consequently no focusing voltage is required. The cathode has a sensitivity range covering the visible near-infrared portion of the spectrum. Utilizing its ability to make visual an infrared image, its many uses include the inspection of photographic film, criminal investigation, and various military applications. It has also been effectively used as a light shutter for high speed photography.

COMPONENTS and INSTRUMENTATION Laboratory
Fort Wayne, Indiana

7177/IC-6 ELECTRICAL CHARACTERISTICS

	LOWER ALLOWABLE LIMIT	TYPICAL	UPPER ALLOWABLE LIMIT	
Photocathode to anode potential (1)	—	6	6.5	kv
Photocathode current density (2)	—	—	0.4	$\mu a/cm^2$
Dark current (3)	—	—	0.1	μa

GENERAL CHARACTERISTICS

Photocathode luminous sensitivity (4) (5) (6)	10	20	—	μa/lumen
Photocathode peak radiant sensitivity (4) (6) (7)	—	0.0018	—	amperes/watt
Phosphor screen luminous efficiency at 6 kv (6)	0.12	0.19	—	lumens/μa
Phosphor screen radiant efficiency at 6 kv (6)	—	0.066	—	watts/watt
Infrared conversion index at 6 kv (6)	2	3.8	—	—
Peak radiant power gain at 6 kv (6)	—	0.7	—	watts/watt
Image magnification (paraxial)	—	0.68	—	—
Radial image distortion at 7.35 mm from center of photocathode (6)	—	10	—	percent
Resolving power (paraxial) (6)	20	25	—	line pairs/mm
Resolving power at 7.35 mm from center of photocathode (6)	—	10	—	line pairs/mm
Mean background screen brightness at 6 kv (3)	—	—	1	μlambert
Ambient temperature	—	—	75	degrees C
Useful photocathode diameter	—	0.658	—	inch
Useful phosphor screen diameter	—	0.517	—	inch

Photocathode type.....S-1

Phosphor screen type.....P-20 (aluminized)

NOTES

(1) The upper allowable working voltage is specified on the basis of a suitable margin of safety regarding internal glow or flashover. Such glow or flashover invariably causes loss in stability or photocathode sensitivity.

(2) Averaged over an interval of not greater than 30 seconds.

(3) Photocathode not illuminated; temperature 25 degrees Centigrade.

(4) At 100 volts dc between photocathode and anode.

(5) With standard tungsten lamp source (2870 degrees Kelvin color temperature, coiled or coiled-coil filament, lead or lime glass envelope).

(6) See "definitions pertaining to image converter tubes".

(7) Calculated from the approximate relationship: peak radiant sensitivity in amperes per watt equals 9×10^{-3} times the luminous sensitivity in microamperes per lumen; this relationship being derived for a photocathode having a typical S-1 spectral response peaking at 8000 Angstroms.

GENERAL INFORMATION

1. The 7177/IC-6 normally is used in conjunction with an objective lens and magnifying eyepiece. The inverted image on the cathode is reinverted by the electron optics of the tube so that the image as it appears on the screen or is seen through the eyepiece is erect. The objective may be either refractive or reflective (Schmidt), and should be designed with proper consideration given to the spherical cathode surface. The eyepiece should be a good quality achromat with a field slightly in excess of the useful phosphor screen area (0.517 inch diameter). A 7-power Hastings triplet will be found reasonably satisfactory for most applications.

2. For the majority of viewing applications a filtered tungsten lamp is used for irradiating the subject. The visible component is suitably suppressed with one of the readily available filters or with several in combination. (Wratten 87C, 88A, Corning 2540, and others.)

3. It is recommended that the precise internal dimensions of the photocathode and anode terminals indicated in the outline drawing be used in the tube mounting. This will aid in maintaining alignment of the tube with respect to the optical system when servicing.

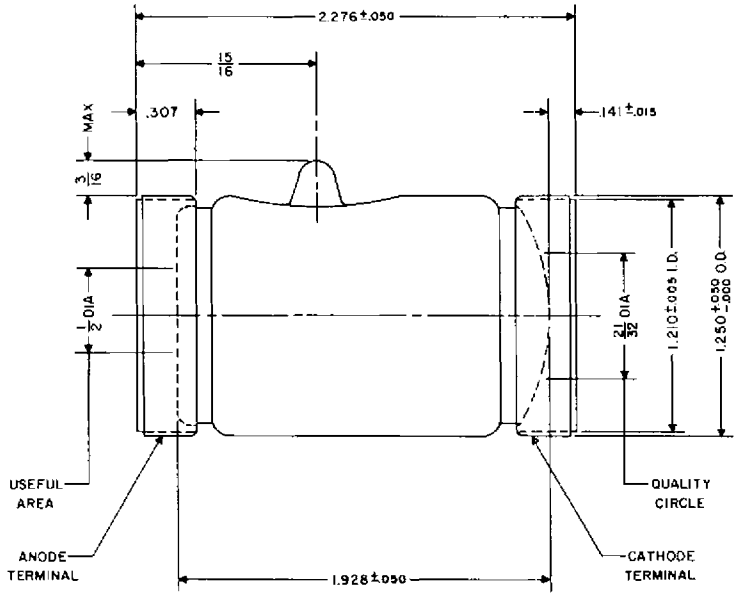

OUTLINE DRAWING

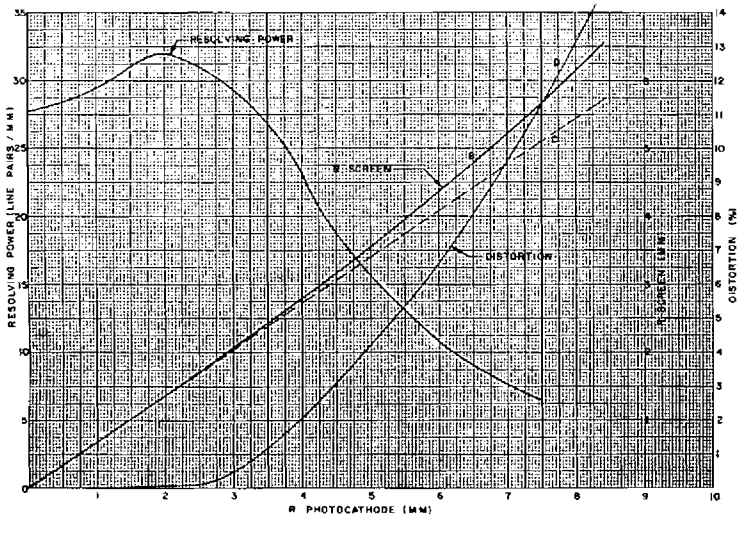

IMAGE CHARACTERISTICS

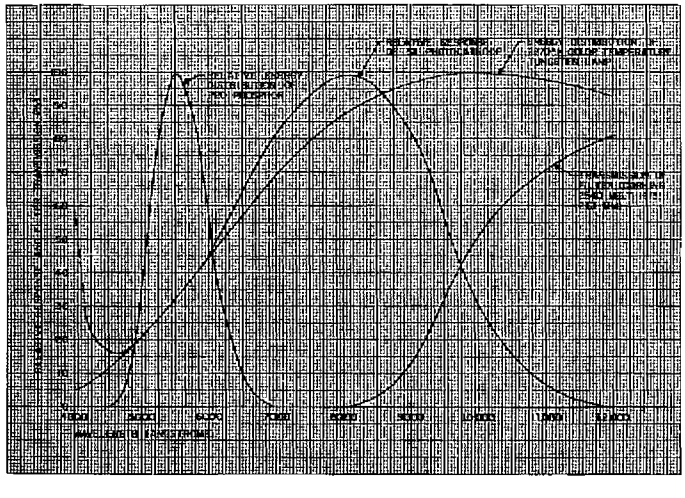

SPECTRAL CHARACTERISTICS

DEFINITIONS PERTAINING TO IMAGE CONVERTER TUBES

PHOTOCATHODE LUMINOUS SENSITIVITY

The ratio of the total photocurrent emitted by the photocathode to the total incident luminous flux; the incident flux being emitted by a standard 2870°K tungsten lamp source.

PHOTOCATHODE PEAK RADIANT SENSITIVITY

The ratio of the total photocurrent emitted by the photocathode to the total incident radiant flux; the incident flux being monochromatic radiation at the wavelength yielding maximum radiant sensitivity and being measured in suitable absolute units such as watts.

PHOSPHOR SCREEN LUMINOUS EFFICIENCY

The ratio of the total exit luminous flux to the electrical current input. Since this is a critical function of phosphor screen voltage, this voltage must be specified. (See Figure below).

PHOSPHOR SCREEN RADIANT EFFICIENCY

The ratio of the total exit radiant flux to the electrical power input. Since this is dependent to a certain extent on phosphor screen voltage, this voltage should be specified.

CONVERSION INDEX

The ratio of the total exit luminous flux divided by the luminous equivalent of the incident infrared flux. The incident infrared flux is that originating from a standard 2870°K tungsten lamp source and transmitted by a 2540 Corning filter (melt 1613, thickness 2.61 mm). Non-filtered light on the cathode must not exceed 0.1 lumen. Luminous equivalent is defined as the product of the luminous flux incident on the filter and the transmission factor as determined with a 2870 degree Kelvin tungsten source and a receiver with standard S-1 response.

$$\text{Conversion Index (C. I.)} = \frac{F_e}{F_i T}$$

where F_e = total exit luminous flux from phosphor screen

F_i = luminous flux incident on filter

T = transmission factor of filter

$$T = \frac{\int_0^\infty J_\lambda \, T_\lambda \, R_\lambda \, d\lambda}{\int_0^\infty J_\lambda \, R_\lambda \, d\lambda}$$

$T = 0.116$

J_λ = Power output of the standard lamp at wavelength λ per unit wavelength interval

R_λ = Fractional transmission of filter at wavelength λ

T_λ = Standard S-1 spectral response at wavelength λ

STANDARD LUMINOUS GAIN

The ratio of the total exit luminous flux to the total incident luminous flux, the incident luminous flux being emitted by a standard 2870°K tungsten lamp source, with no filter interposed between source and photocathode. In terms of associated tube parameters:

Luminous gain (lumens/lumen) =
photocathode luminous sensitivity (microamperes/lumen) ×
phosphor screen luminous efficiency (lumens/microampere).

Numerically, the luminous gain and the conversion index of an image converter tube are equal provided the photocathode has a standard S-1 spectral response. If the photocathode does not have this standard spectral response, the conversion index, which will then differ in general from the luminous gain, is a more appropriate measure of the capability of the tube as an infrared image converter.

PEAK RADIANT POWER GAIN

The ratio of the total exit radiant flux, measured in suitable absolute units such as watts, to the total incident radiant flux measured in the same units, the incident flux being monochromatic radiation at the wavelength of peak photocathode radiant sensitivity. In terms of associated tube parameters:

Peak Radiant Power Gain (watts/watt) =
Photocathode peak radiant sensitivity (amperes/watt) ×
accelerating potential (volts) ×
phosphor screen radiant efficiency (watts/watt).

DISTORTION

The percentage departure of the radial distance of an image point on the screen from the product of the radial distance of the corresponding object point on the photocathode and the paraxial magnification. For example, an illuminated point 6 mm from the center of the photocathode would theoretically be reproduced as a point 4.1 mm from the center of the screen (see Curve C), however, because of the 6.6 percent distortion at this distance from the center of the photocathode (see Curve D), the actual point will appear 4.35 mm from the center of the screen (see Curve B). The magnification at any radial position is the slope of curve B at that position.

RESOLVING POWER

The number of equally spaced parallel opaque lines per unit length (with spacing equal to the width of the lines) at the photocathode which may be observed in the resulting screen image.

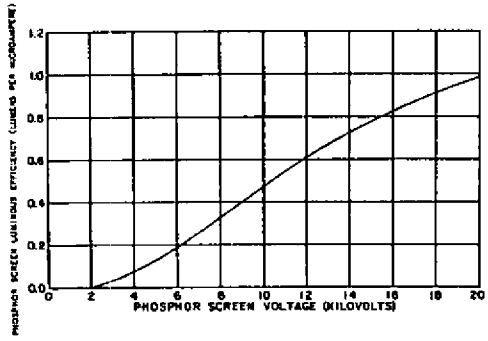

Address inquiries to: Director, Components and Instrumentation Laboratory, ITT Industrial Laboratories

3700 E. Pontiac Street, Fort Wayne, Indiana **Telephone Eastbrook 7571**

ELECTRON TUBE DIVISION
BOX 100 EASTON, PA. 18043
INTERNATIONAL TELEPHONE AND TELEGRAPH CORPORATION

7178 HYDROGEN DIODE

DESCRIPTION

The 7178 is a glass envelope hydrogen filled diode designed for Pulse Transformer Back swing Clipper Applications. The indirectly heated cathode, the internal hydrogen reservoir, and the rugged anode design of the 7178 combine to produce reliable service and long life.

ELECTRICAL DATA, GENERAL

	Nom.	Min.	Max.					
Heater Voltage	5.0	4.7	5.3	Volts AC	Reservoir Current (at 5.0 volts)	2.0	5.0	Amperes
Heater Current (at 5.0 volts)		14.0	24.0	Amperes	Minimum Heating Time		10	Minutes
Reservoir Voltage	5.0	4.7	5.3	Volts AC				

MECHANICAL DATA, GENERAL

Mounting Position	Any	Net Weight	1.5 Pounds
Base (Per outline)		Dimensions (Per outline)	
Cooling (Note 1)			

RATINGS (Note 2)

Max. Peak Anode Voltage, Inverse, Transient (Note 3)	30.0 KV	Max. R.M.S. Anode Current (Note 4)	15.0 Amps.
Max. Peak Anode Voltage, Inverse, Operating	16.0 KV	Min. Anode Voltage	500.0 Volts
Max. Peak Anode Current	500.0 Amps.	Ambient Temperature	-50° to + 75° C
Max. Average Anode Current	0.50 Amps.		

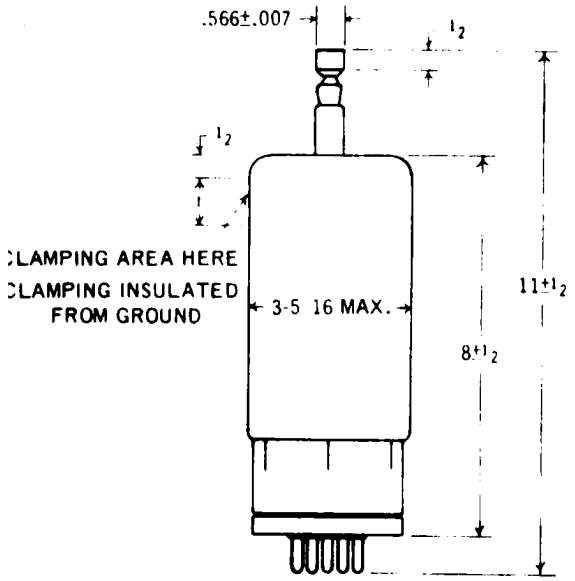

NOTE 1

Cooling of the Anode lead is permissible, but there shall be no Air blast directly on the bulb.

NOTE 2

Maximum ratings should not occur simultaneously. In special cases maximum ratings may be exceeded. Consult Applications Department.

NOTE 3

The 7173 will withstand transient overvoltage conditions of epx - 30 KV for (1) per cent of its rated life

NOTE 4

The Root Mean Square Anode Current shall be computed as the square root of the product of the peak and the average current.

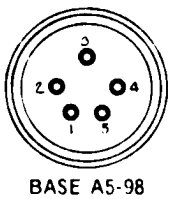

BASE A5-98

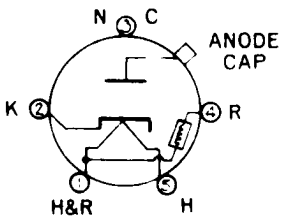

U.K. TECHNICAL AND SALES ENQUIRIES SHOULD BE DIRECTED TO STC COMPONENTS GROUP, VALVE DIVISION, BRIXHAM ROAD, PAIGNTON, DEVON. TELEPHONE PAIGNTON 50762, TELEX 4230.

ELECTRON TUBE DEPARTMENT ■ COMPONENTS DIVISION
INTERNATIONAL TELEPHONE AND TELEGRAPH CORPORATION, CLIFTON, NEW JERSEY

KUTHE
7322

T E N T A T I V E

CERAMIC HYDROGEN THYRATRON

DESCRIPTION:

THE 7322 IS A 12.5 MEGAWATT, CERAMIC HYDROGEN THYRATRON. THE CERAMIC EXTERNAL ANODE DESIGN PERMITS OPERATION AT UNUSUALLY HIGH POWER LEVELS. THE SPECIAL FEATURES OF THE 7322 INCLUDE A HYDROGEN RESERVOIR TO MAINTAIN OPTIMUM PRESSURE AND TO INSURE LONG LIFE.

ELECTRICAL DATA, GENERAL:	NOM.	MIN.	MAX.	
HEATER VOLTAGE	6.3	5.8	6.8	VOLTS A.C.
HEATER CURRENT (AT 6.3 VOLTS)		14.0	22.0	AMPERES
HEATER (NOTE 1)				
RESERVOIR VOLTAGE (NOTE 2)		5.8	6.8	VOLTS
RESERVOIR CURRENT AT 4.5 VOLT		4.0	6.0	AMPERES
MINIMUM HEATING TIME			5	MINUTES

MECHANICAL DATA, GENERAL:		
MOUNTING POSITION	VERTICAL ONLY, BASE DOWN	
BASE	PER OUTLINE	
COOLING (NOTE 3)		
NET WEIGHT	3.0	POUNDS
DIMENSIONS (SEE OUTLINE DRAWING)		

RATINGS:

MAX. PEAK ANODE VOLTAGE, FORWARD	25	KILOVOLTS
MAX. PEAK ANODE VOLTAGE, INVERSE (NOTE 4)	25	KILOVOLTS
MIN. ANODE SUPPLY VOLTAGE	1.5	KILOVOLTS D.C.
MAX. PEAK ANODE CURRENT	1000	AMPERES
MAX. AVERAGE ANODE CURRENT	1.5	AMPERES
MAX. RMS ANODE CURRENT (NOTE 5)	36.0	AMPERES A.C.
MAX. EPY X IB X PRR	20.0×10^9	
MAX. ANODE CURRENT RATE OF RISE	5000	AMPS./U SEC.
PEAK TRIGGER VOLTAGE (NOTE 6)		
MAX. PEAK INVERSE TRIGGER VOLTAGE	650	VOLTS
MAX. ANODE DELAY TIME (NOTE 7)	0.5	MICROSECOND
MAX. ANODE DELAY TIME DRIFT	0.15	MICROSECOND
MAX. TIME JITTER (NOTE 8)	0.005	MICROSECOND
AMBIENT TEMPERATURE	-55° TO $+125^\circ$	C

Note 1:

See outline drawing.

Note 2:

The optimum reservoir voltage for operation in accordance with Operation (1) conditions is inscribed on the base of the tube and must be held to within ± 7.5%. Applications involving other operating conditions will necessitate the redetermination of the optimum reservoir voltage. Operation (1) conditions (25 kv - 1000 a - 2.5 us - 360 pps).

Note 3:

It may be desirable to employ forced air cooling under conditions of high Pb number operations. A cooling air blast of 10 cfm may be directed into the anode cup.

Note 4:

In pulsed operation, the peak inverse voltage, exclusive of a spike of .05us maximum duration, shall not exceed 5.0 kv during the first 25us following the anode pulse.

Note 5:

The root mean square anode current shall be computed as the square root of the product of peak current and the average current.

Note 6:

The Driver pulse, measured at tube socket with thyratron grid disconnected: 500 volts minimum, 1500 volts maximum; tr = 0.35us maximum; grid pulse duration 2.0us minimum. Impedance of drive circuit 50 to 400 ohms.

Note 7:

The time of anode delay is measured between the 26 percent point on the rising portion of the unloaded grid voltage pulse and the point at which anode conduction first evidences itself on the loaded grid pulse.

Note 8:

Time jitter is measured at the 50 percent point on the anode current pulse.

Additional information for specific applications can be obtained from the

Electron Tube Applications Section
ITT Components Division
Post Office Box 412
Clifton, New Jersey

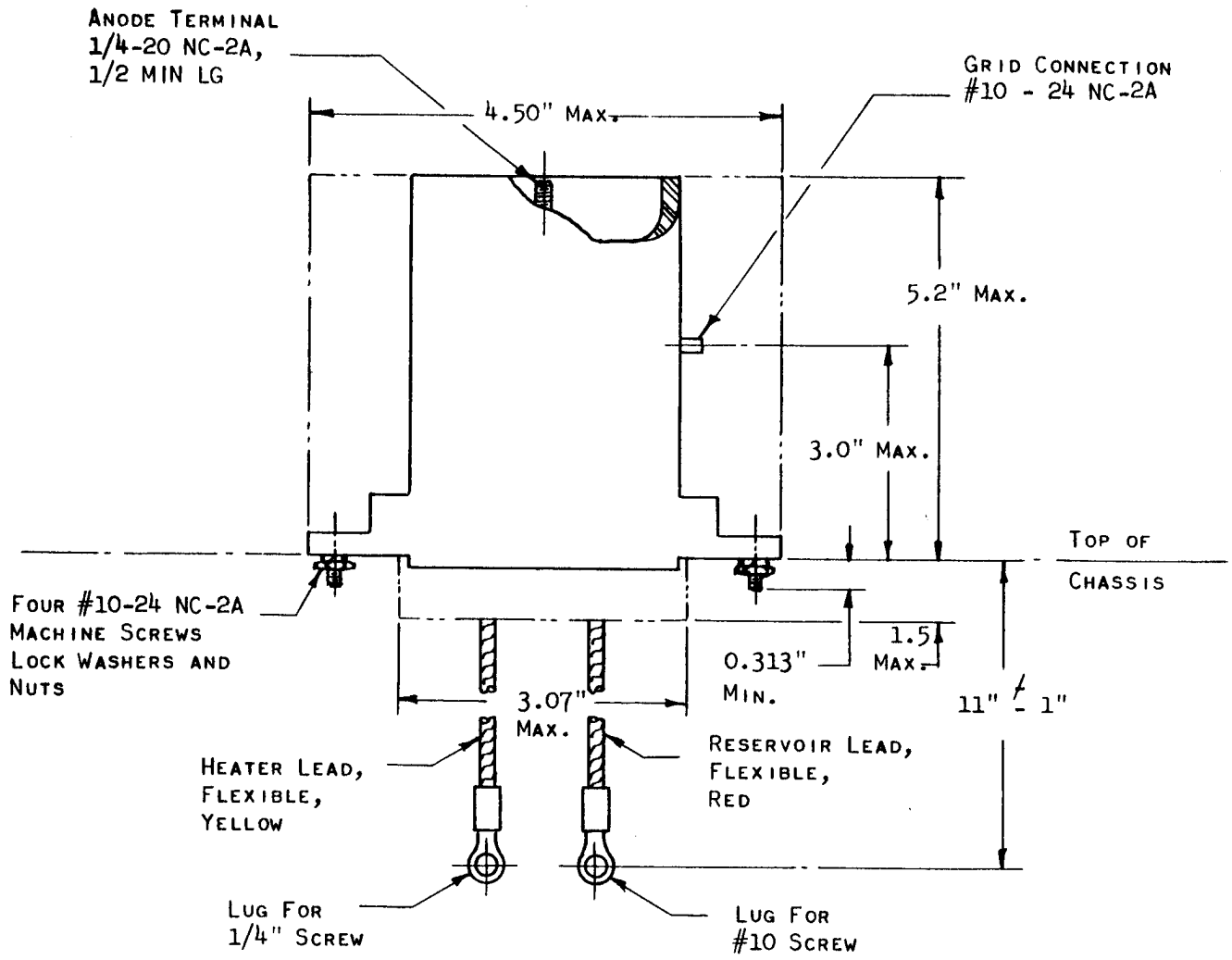

OUTLINE

7322

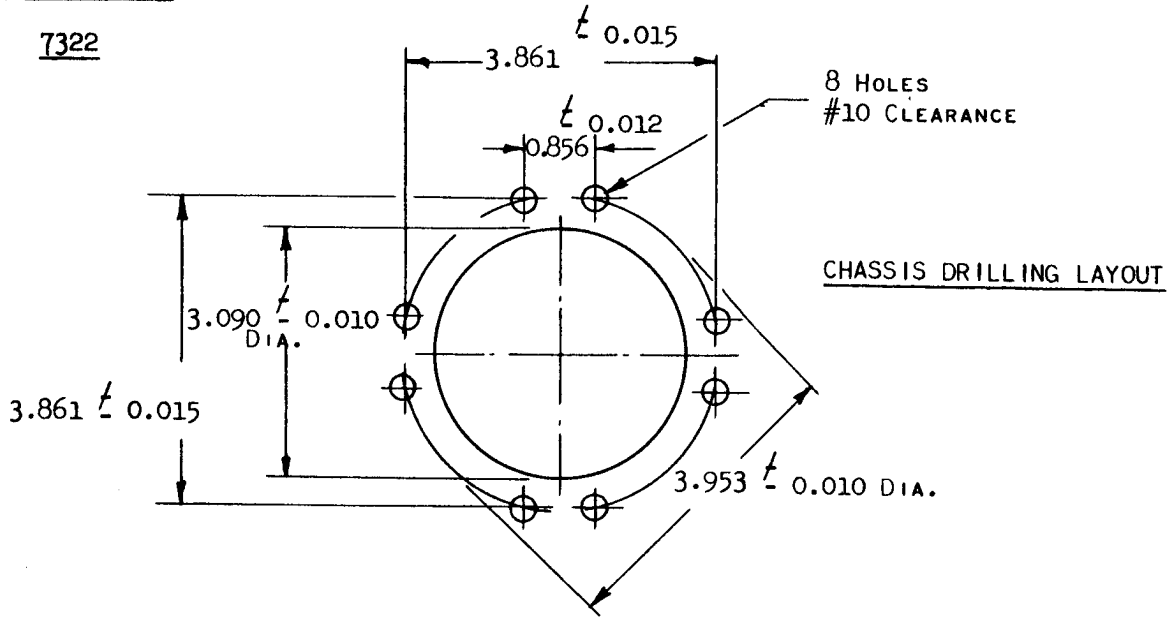

T E N T A T I V E

CERAMIC HYDROGEN THYRATRON

DESCRIPTION:

THE 7390 IS A 33 MEGAWATT, LARGE CERAMIC HYDROGEN THYRATRON. THE EXTERNAL ANODE DESIGN PERMITS OPERATION AT HIGH POWER LEVELS. THE SPECIAL FEATURES OF THE 7390 INCLUDE A HYDROGEN RESERVOIR TO MAINTAIN OPTIMUM PRESSURE AND TO INSURE LONG LIFE.

ELECTRICAL DATA, GENERAL:

	Nom.	Min.	Max.		
Heater Voltage	6.3	5.9	6.7		Volts AC
Heater Current (at 6.3 volts)		22.0	35.0		Amperes
Heater (Note 1)					
Reservoir Coltage (Note 2)		3.5	5.5		Volts
Reservoir Current at 4.5 Volts		8.0	10.0		Amperes
Minimum Heating Time				15	Minutes

MECHANICAL DATA, GENERAL:

Mounting Position	Vertical only, base down	
Base (Per outline)		
Cooling (Note 3)		
Net Weight	11.5	Pounds
Dimensions (See outline drawing)		

RATINGS:

Max. Peak Anode Voltage, Forward	33.0	Kilovolts
Max. Peak Anode Voltage, Inverse (Note 4)	33.0	Kilovolts
Min. Anode Supply Voltage	3.5	Kilovolts DC
Max. Peak Anode Current	2000	Amperes
Max. Average Anode Current	4.0	Amperes
Max. RMS Anode Current (Note 5)	72	Amperes AC
Max. EPY x 1B x PRR	30 x 109	
Max. Anode Current Rate of Rise	10000	Amps./u sec.
Peak Trigger Voltage (Note 6)		
Max. Peak Inverse Trigger Voltage	650	Volts
Max. Anode Delay Time (Note 7)	1.0	Microsecond
Max. Anode Delay Time Drift	0.25	Microsecond
Max. Time Jitter (Note 8)	0.01	Microsecond
Ambient Temperature	-55° to + 75°	C

Note 1:

Cathode connected to center of cathode heater.

Note 2:

Reservoir voltage is marked on the base of each 7390. This is the correct voltage for one typical operating condition, but is not the optimum value for all types of operation. This value may be used initially in new applications and the optimum value may then be obtained by exploring the range of voltage on either side of that marked on the tube. Excess reservoir voltage will result in a failure of the thyratron to deionize between pulses (continuous conduction). Insufficient reservoir voltage will result in excess anode dissipation (270°C.) as indicated by heating of the anode. The optimum reservoir voltage is the midpoint between these two extremes. In certain applications, it may be necessary to provide a regulated source to assure operation within the permissible range of reservoir voltages.

Note 3:

Cooling of the anode is permissible.

Note 4:

During the first 25 microseconds after conduction, the peak inverse anode voltage shall not exceed 5 KV.

Note 5:

The root mean square anode current shall be computed as the square root of the product of peak current and the average current.

Note 6:

The pulse produced by the driver circuit shall have the following characteristics when viewed at the 7390 socket with the tube removed.

A.	Amplitude	1300 - 2500 Volts
B.	Duration	2 microseconds (at 70% points)
C.	Time of Rise	0.35 microseconds (min.)
D.	Impedance	10 - 25 ohms

The limits of anode time delay and anode time jitter are based on the minimum trigger. Using the highest permissible trigger voltage and lowest trigger source impedance materially reduces these values below the limits specified.

NOTE 7:

THE TIME OF ANODE DELAY IS MEASURED BETWEEN THE 26 PERCENT POINT ON THE RISING PORTION OF THE UNLEADED GRID VOLTAGE PULSE, AND THE POINT AT WHICH ANODE CONDUCTION FIRST EVIDENCES ITSELF ON THE LOADED GRID PULSE.

NOTE 8:

TIME JITTER IS MEASURED AT THE 50% POINT ON THE ANODE CURRENT PULSE.

ADDITIONAL INFORMATION FOR SPECIFIC APPLICATIONS CAN BE OBTAINED FROM THE

ELECTRON TUBE APPLICATIONS SECTION
ITT COMPONENTS DIVISION
POST OFFICE BOX 412
CLIFTON, NEW JERSEY

OUTLINE 7390

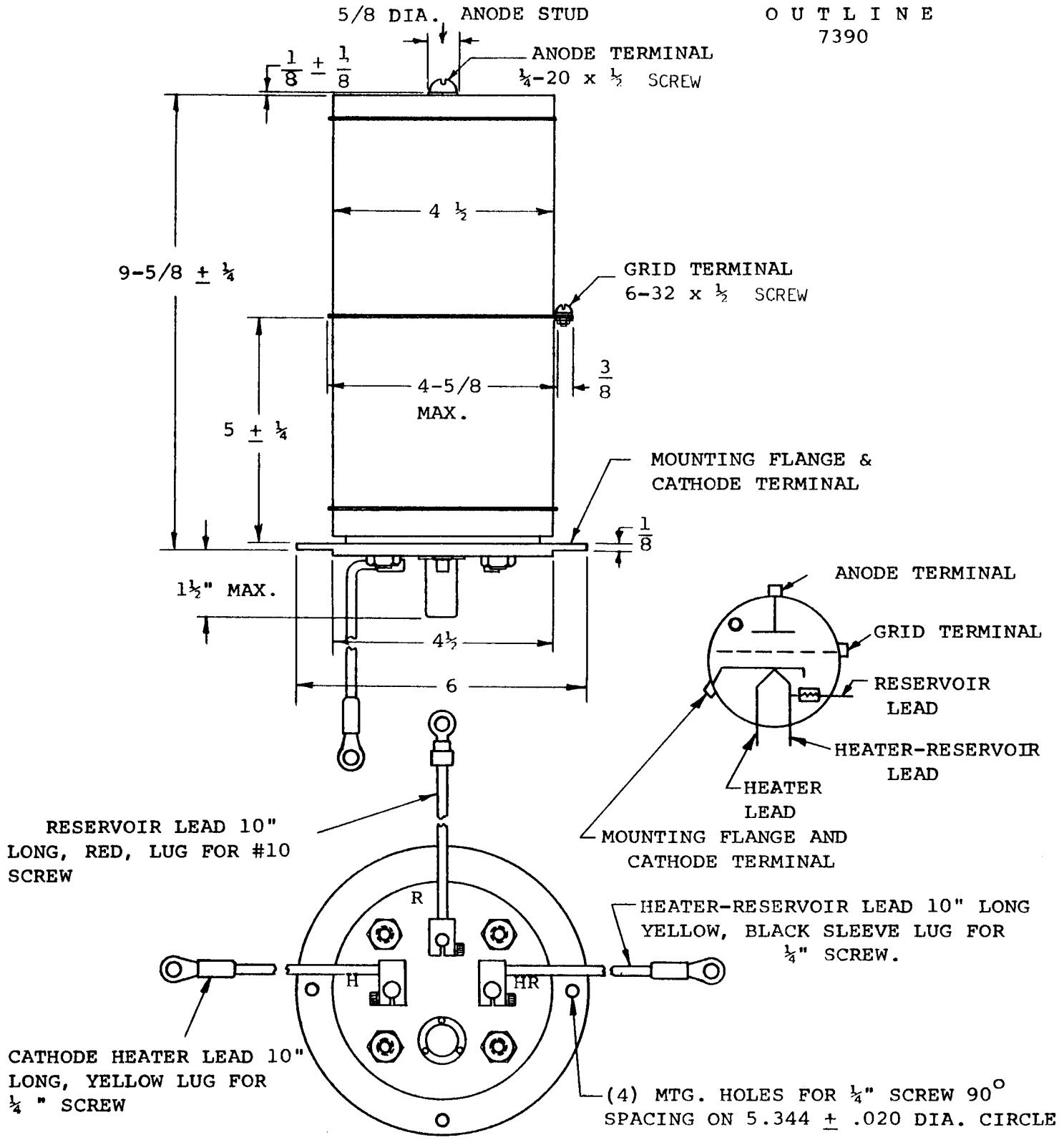

TENTATIVE

DESCRIPTION:

THE 7583/KU-82 IS A UNIPOTENTIAL CATHODE, THREE ELEMENT HYDROGEN FILLED THYRATRON DESIGNED FOR NETWORK DISCHARGE SERVICE. IN SUCH SERVICE IT IS SUITABLE FOR PRODUCING PULSE OUTPUTS OF MORE THAN 140 KW AT AN AVERAGE POWER OF MORE THAN 150 WATTS. IT IS ESPECIALLY SUITABLE FOR COMPACT, AIRBORNE RADAR SYSTEMS.

ELECTRICAL DATA, GENERAL:

	Nom.	Min.	Max.		
Heater Voltage	6.3	5.6	6.6		Volts AC
Heater Current (at 6.3 Volts)		2.0	2.5		Amperes
Minimum Heating Time				2.0	Minutes

MECHANICAL DATA, GENERAL:

Mounting Position		Any
Base		Per Outline
Cooling (Note 1)		
Net Weight	0.3	Pounds
Dimensions		Per Outline

RATINGS:

Max. Peak Anode Voltage, Forward	8.0	Kilovolts
Max. Peak Anode Voltage, Inverse (Note 2)	8.0	Kilovolts
Min. Anode Supply Voltage	2.5	Kilovolts DC
Max. Peak Anode Current	35	Amperes
Max. Average Anode Current	45	Milliamperes
Max. RMS Anode Current (Note 3)	1.25	Amperes AC
Max. epy x ib x prr	1.1 x 109	
Max. Anode Current Rate of Rise	1200	Amps. / u sec.
Peak Trigger Voltage (Note 4)		
Max. Anode Delay Time (Note 5)	0.60	Microsecond
Max. Anode Delay Time Drift	0.15	Microsecond
Max. Time Jitter (Note 6)	0.005	Microsecond
Ambient Temperature	-50 to + 90°	C

Note 1:

Cooling of the anode lead is permissible, but there shall be no air blast directly on the bulb.

Note 2:

In pulsed operation, the peak inverse voltage, exclusive of spike of .05 us maximum duration, shall not exceed 3000 V during the first 25 us after the pulse.

Note 3:

The root mean square anode current shall be computed as the square root of the product of the peak current and the average current.

Note 4:

Driver pulse, measured at tube socket with thyratron grid disconnected; Egy = 175 v (min), time of rise = 0.5 us (max), grid pulse duration = 2 us (min). Impedance of drive circuit = 1500 ohms (max).

Note 5:

The time of anode delay is measured between the 26 percent point on the rising portion of the unloaded grid voltage pulse and the point at which evidence of anode conduction first appears on the loaded grid pulse.

Note 6:

Time jitter is measured at the 50 percent point on the anode current pulse.

Additional information for specific applications can be obtained from the

Electron Tube Applications Section
ITT Components Division
Post Office Box 412
Clifton, New Jersey

OUTLINE

KUTHE
7583/KU-82

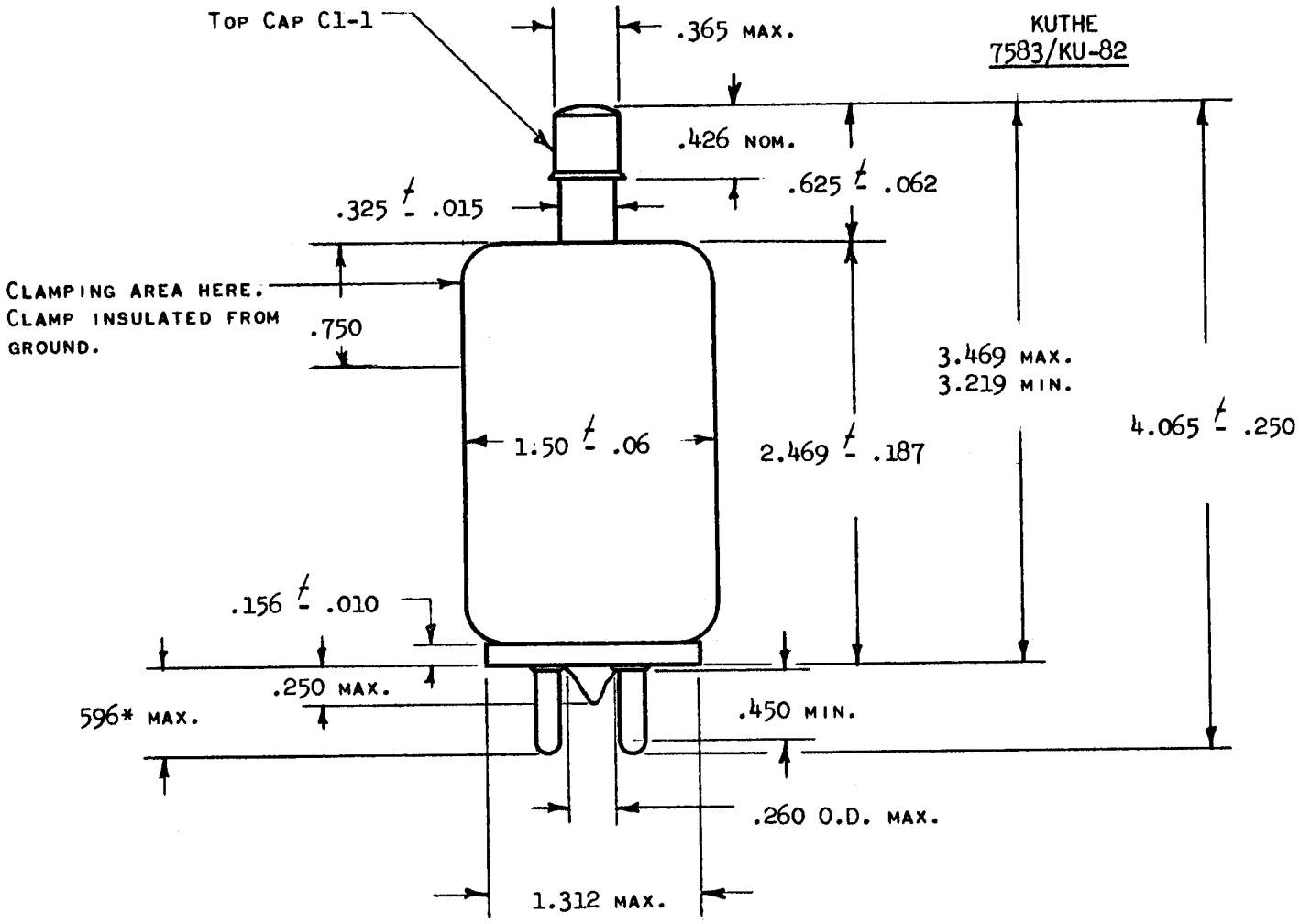

* ON FINISHED TUBE ADD .030 FOR SOLDER

OUTLINE

KUTHE KU-82

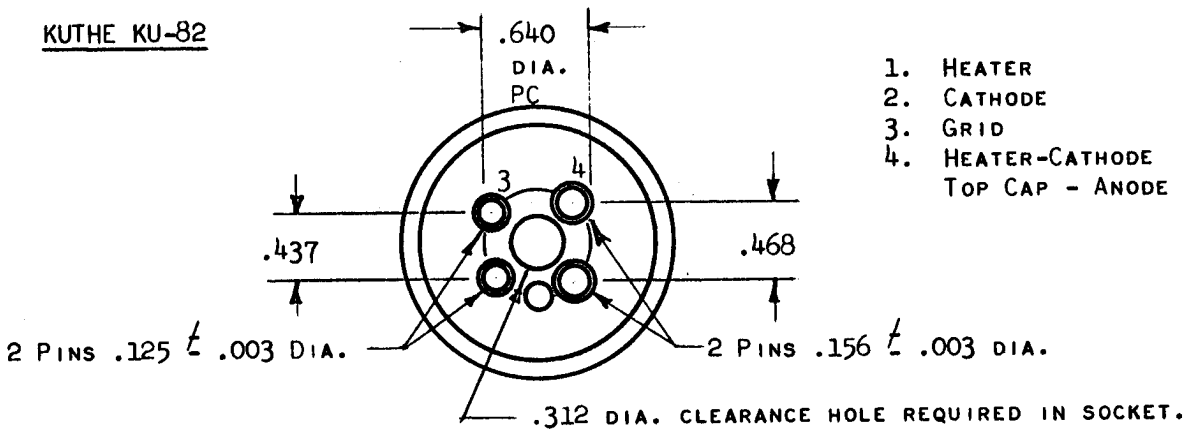

1. HEATER
2. CATHODE
3. GRID
4. HEATER-CATHODE
   TOP CAP - ANODE

WAFER BASE. PIN ARRANGEMENT AND DIMENSIONS ONLY AS PER A4-9 MIL-E-1C

ELECTRON TUBE DEPARTMENT ■ COMPONENTS DIVISION
INTERNATIONAL TELEPHONE AND TELEGRAPH CORPORATION, CLIFTON, NEW JERSEY

KUTHE
* 7583

DESCRIPTION:

THE 7583 IS A UNIPOTENTIAL CATHODE, THREE ELEMENT HYDROGEN FILLED THYRATRON DESIGNED FOR NETWORK DISCHARGE SERVICE. IN SUCH SERVICE IT IS SUITABLE FOR PRODUCING PULSE OUTPUTS OF MORE THAN 140 KW AT AN AVERAGE POWER OF MORE THAN 150 WATTS. IT IS ESPECIALLY SUITABLE FOR COMPACT, AIRBORNE RADAR SYSTEMS.

ELECTRICAL DATA, GENERAL:	NOM.	MIN.	MAX.		
HEATER VOLTAGE	6.3	5.6	6.6		VOLTS AC
HEATER CURRENT (AT 6.3 VOLTS)		2.0	2.5		AMPERES
MINIMUM HEATING TIME				2.0	MINUTES

MECHANICAL DATA, GENERAL:		
MOUNTING POSITION		ANY
BASE		PER OUTLINE
COOLING (NOTE 1)		
NET WEIGHT	0.3	POUNDS
DIMENSIONS		PER OUTLINE

RATINGS:		
MAX. PEAK ANODE VOLTAGE, FORWARD	8.0	KILOVOLTS
MAX. PEAK ANODE VOLTAGE, INVERSE (NOTE 2)	8.0	KILOVOLTS
MIN. ANODE SUPPLY VOLTAGE	2.5	KILOVOLTS DC
MAX. PEAK ANODE CURRENT	35	AMPERES
MAX. AVERAGE ANODE CURRENT	45	MILLIAMPERES
MAX. RMS ANODE CURRENT (NOTE 3)	1.25	AMPERES AC
MAX. EPY X IB X PRR	1.1 x 10⁹	
MAX. ANODE CURRENT RATE OF RISE	1200	AMPS. / U SEC.
PEAK TRIGGER VOLTAGE (NOTE 4)		
MAX. ANODE DELAY TIME (NOTE 5)	0.60	MICROSECOND
MAX. ANODE DELAY TIME DRIFT	0.15	MICROSECOND
MAX. TIME JITTER (NOTE 6)	0.005	MICROSECOND
AMBIENT TEMPERATURE	-50 TO + 90°	C

* THIS TUBE WAS PREVIOUSLY DESIGNATED BY TYPE NUMBER KU-82.

Note 1:

Cooling of the anode lead is permissible, but there shall be no air blast directly on the bulb.

Note 2:

In pulsed operation, the peak inverse voltage, exclusive of spike of .05 us maximum duration, shall not exceed 3000 V during the first 25 us after the pulse.

Note 3:

The root mean square anode current shall be computed as the square root of the product of the peak current and the average current.

Note 4:

Driver pulse, measured at tube socket with thyratron grid disconnected; Egy = 175 v (min), time of rise = 0.5 us (max), grid pulse duration = 2 us (min). Impedance of drive circuit = 1500 ohms (max).

Note 5:

The time of anode delay is measured between the 26 percent point on the rising portion of the unloaded grid voltage pulse and the point at which evidence of anode conduction first appears on the loaded grid pulse.

Note 6:

Time jitter is measured at the 50 percent point on the anode current pulse.

Additional information for specific applications can be obtained from the

Electron Tube Applications Section
ITT Components Division
Post Office Box 412
Clifton, New Jersey

OUTLINE

KUTHE
7583

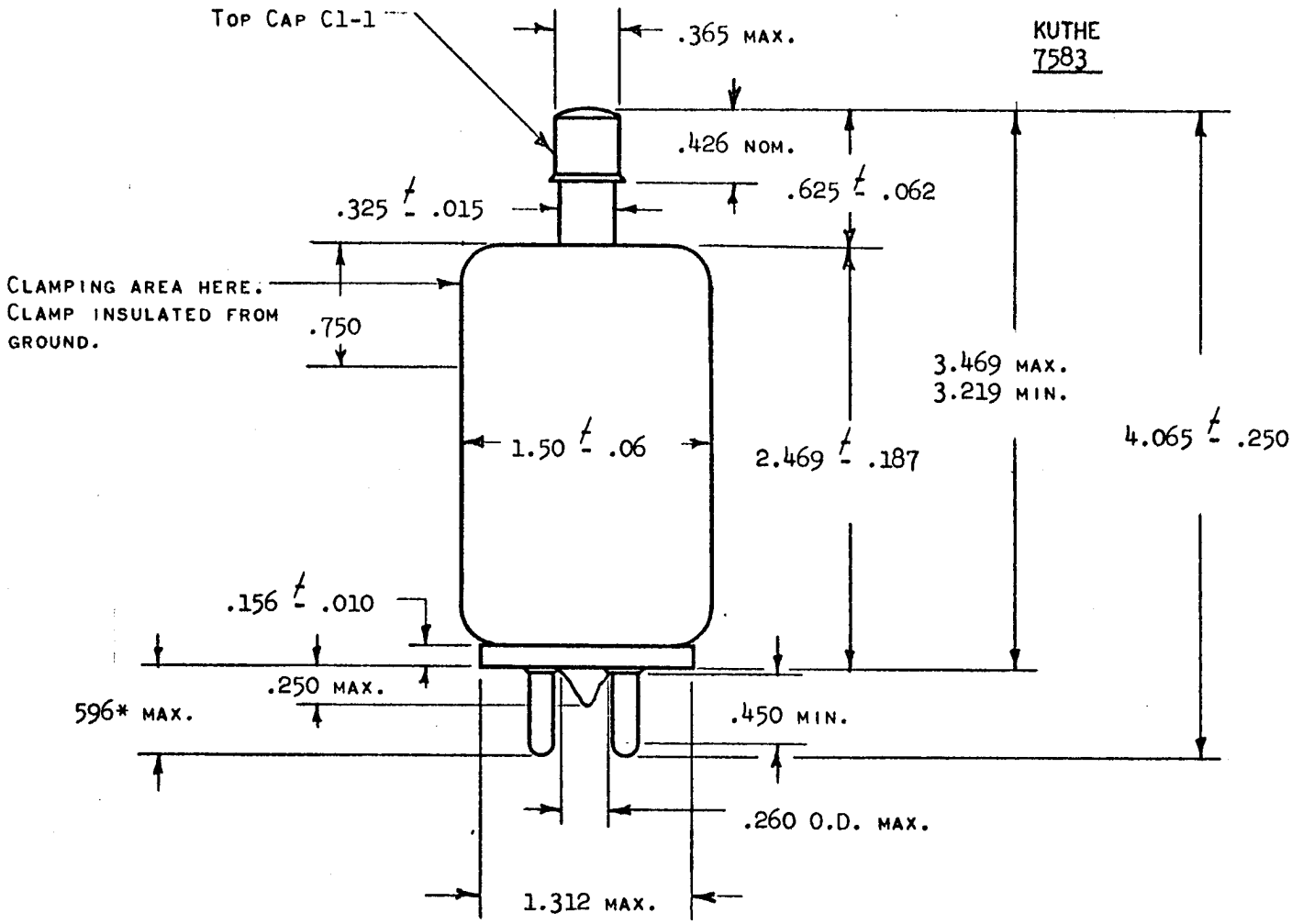

* ON FINISHED TUBE ADD .030 FOR SOLDER

OUTLINE

KUTHE KU-82

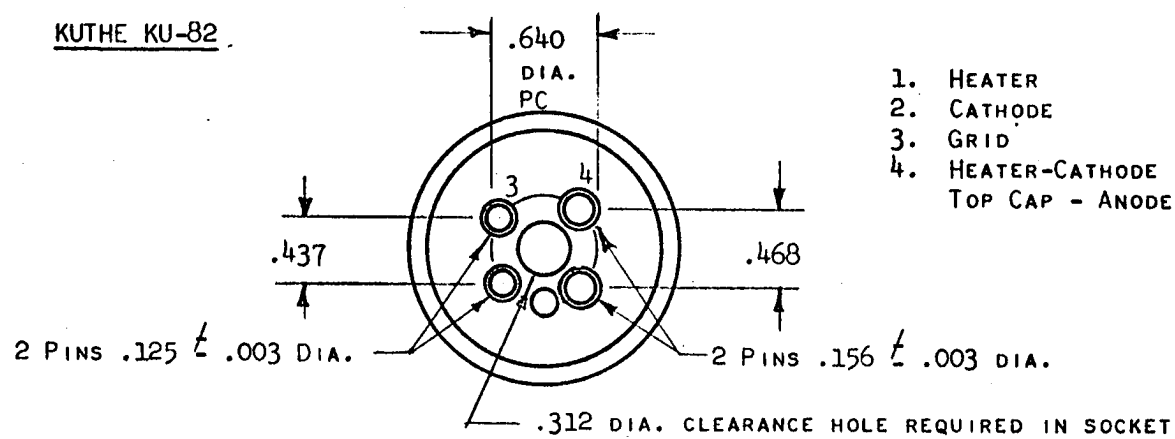

1. HEATER
2. CATHODE
3. GRID
4. HEATER-CATHODE
   TOP CAP - ANODE

WAFER BASE. PIN ARRANGEMENT AND DIMENSIONS ONLY AS PER A4-9 MIL-E-1C

7590
HYDROGEN THYRATRON TUBE

The Type 7590 is a three element unipotential cathode hydrogen thyratron designed for "crow-bar" service. This tube is equipped with a hydrogen reservoir for maximum dependability.

GENERAL CHARACTERISTICS

Electrical	Nom.	Min.	Max.	
Heater Voltage	6.3	6.0	6.6	Volts AC
Heater Current (at 6.3 volts)		12.0	22.0	Amperes
Reservoir Voltage (Note 1)		2.5	5.5	Volts
* Reservoir Current at 4.5 Volts		2.0	5.0	Amperes
Minimum Heating Time			3	Minutes

Mechanical		
Mounting Position		Any
Base		See Outline
Cooling (Note 2)		
Net Weight	1.5	Pounds
Dimensions		Per Outline

MAXIMUM RATINGS

Max. Peak Anode Voltage, Forward, Transient (Note 3)	30.0	Kilovolts
Max. Peak Anode Voltage, Forward, Operating	25.0	Kilovolts
Max. Peak Anode Voltage, Inverse	15.0	Kilovolts
Min. Anode Supply Voltage	10.0	Kilovolts DC
Max. Peak Anode Current	1000	Amperes
* Max. Average Anode Current (Note 4)	500	Milliamperes
Averaging Time	10	Seconds
Max. Discharge Time (Note 4)	0.1	Seconds
Max. Anode Current Rate of Rise	2500	Amps / u sec.
* Peak Trigger Voltage (Note 5)		
Max. Anode Delay Time	1.0	Microseconds
Ambient Temperature	-55° to $+75^{\circ}$	

Note 1:

Adjust reservoir voltage to value indicated on tube within ±5%.

Note 2:

No cooling required.

Note 3:

The maximum peak forward transient anode voltage rating applies to a transient voltage condition wherein the duration of the transient does not exceed two seconds.

Note 4:

The allowable time of discharge varies with the current as shown
Filter Discharge Period 0 - 1.5 ms.

Rectifier Short Circuit Period	1.5 - 100 ms	25 a
Rectifier Short Circuit Period	1.5 - 50 ms	50 a
Rectifier Short Circuit Period	1.5 - 30 ms	85 a

Time will be measured from the initiation of the discharge.

* Indicates change from data sheet dated 6-61

* Note 5:

The driver pulse measured at the tube socket with the thyratron grid disconnected shall be: egy = 550 Volts minimum, 2500 Volts maximum; Rate of Rise 1800 Volts per Microsecond; tp = 2.0 Microseconds minimum; Impedance of Driver Circuit 50 - 200 Ohms.

Additional information for specific applications can be obtained from the

Electron Tube Applications Section
ITT Electron Tube Division
P. O. Box 100
Easton, Pennsylvania

* Indicates change from data sheet dated 6-61

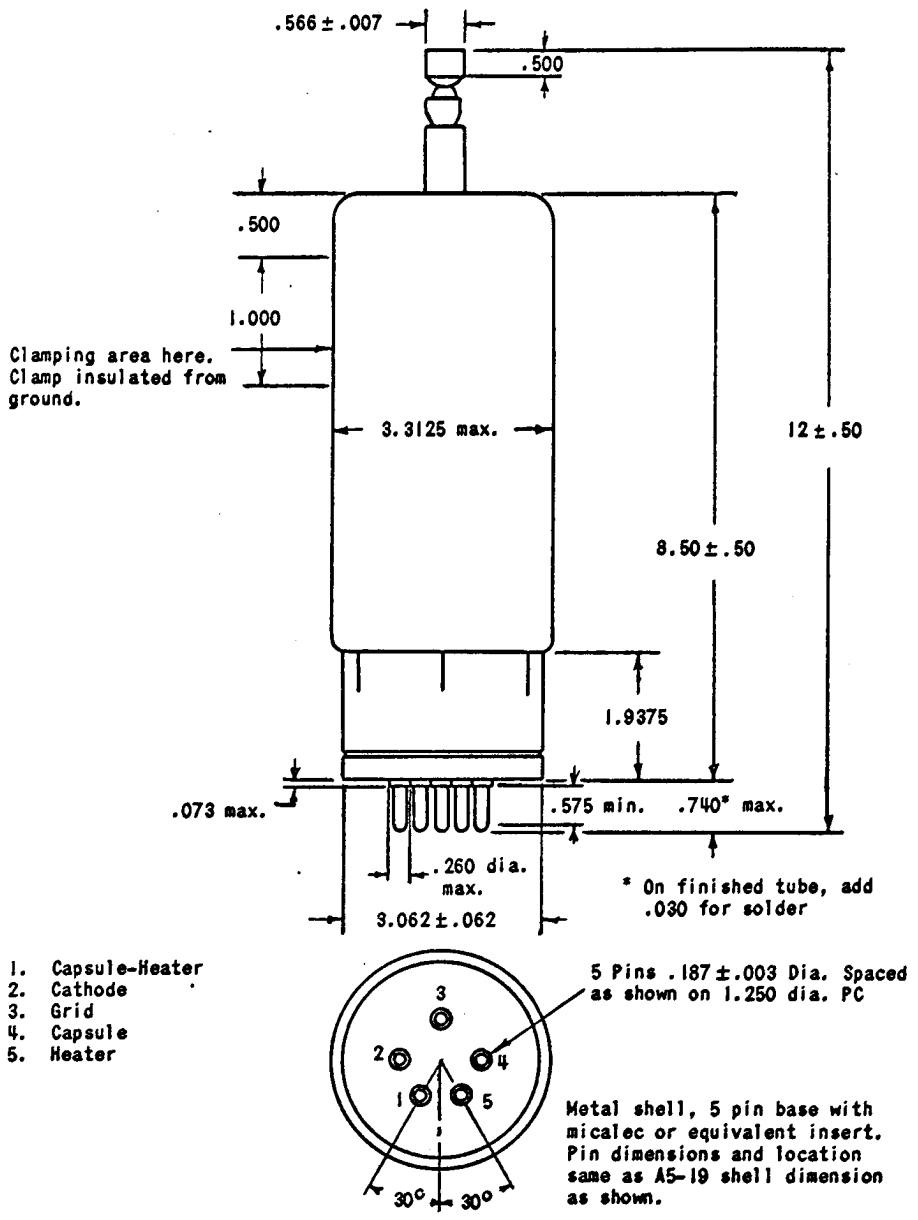

OUTLINE 7590

ITT ELECTRON TUBE DIVISION
CLIFTON, NEW JERSEY
INTERNATIONAL TELEPHONE AND TELEGRAPH CORPORATION

KUTHE
TYPE 7603

CROWBAR THYRATRON

DESCRIPTION:

THE TYPE 7603 IS A HYDROGEN THYRATRON DESIGNED FOR CROWBAR SERVICE. THIS TUBE IS EQUIPPED WITH A HYDROGEN RESERVOIR FOR MAXIMUM DEPENDABILITY. THIS TUBE WAS PREVIOUSLY DESIGNATED BY THE TYPE NUMBER KU-401.

ELECTRICAL DATA, GENERAL:

	Nom.	Min.	Max.	
Heater Voltage	6.3	6.0	6.6	Volts AC
Heater Current (At 6.3 Volts)		5.5	6.7	Amperes
Minimum Heating Time			3	Minutes

MECHANICAL DATA, GENERAL:

Mounting Position	Any
Base	See Outline
Cooling	Not Required
Net Weight	8 Ounces
Dimensions	Per Outline

RATINGS:

Max. Peak Anode Voltage, Forward, Operating	10.0	Kilovolts
Max. Peak Anode Voltage, Inverse	8.0	Kilovolts
Min. Anode Supply Voltage	4.0	Kilovolts DC
Max. Peak Anode Current (Note 1)	200	Amperes
Averaging Time	10	Seconds
Max. Discharge Time (Note 1)	0.1	Seconds
Peak Trigger Voltage (Note 2)		
Max. Anode Delay Time	1.0	Microseconds
Ambient Temperature	-55° to +75°	C

7/62

Note 1:

The allowable time of discharge varies with the current as shown:

Rectifier Short Circuit Period	1.5	- 100 ms	5A
" " " "	1.5	- 50 ms	10A
" " " "	1.5	- 30 ms	25A
Filter Discharge	0	- 1.5 ms	200A

Time will be measured from the initiation of the discharge.

Note 2:

The trigger pulse measured at the tube socket with the thyratron grid disconnected shall be: E_{GY} = 175 volts minimum, 1,000 volts maximum; time of rise = 0.5 us (max.); tp = 2.0 us minimum; impedance of trigger circuit 50 - 1,500 ohms.

Additional information for specific applications can be obtained from the -

Electron Tube Applications Section
ITT Components Division
Post Office Box 412
Clifton, New Jersey

KUTHE
7603

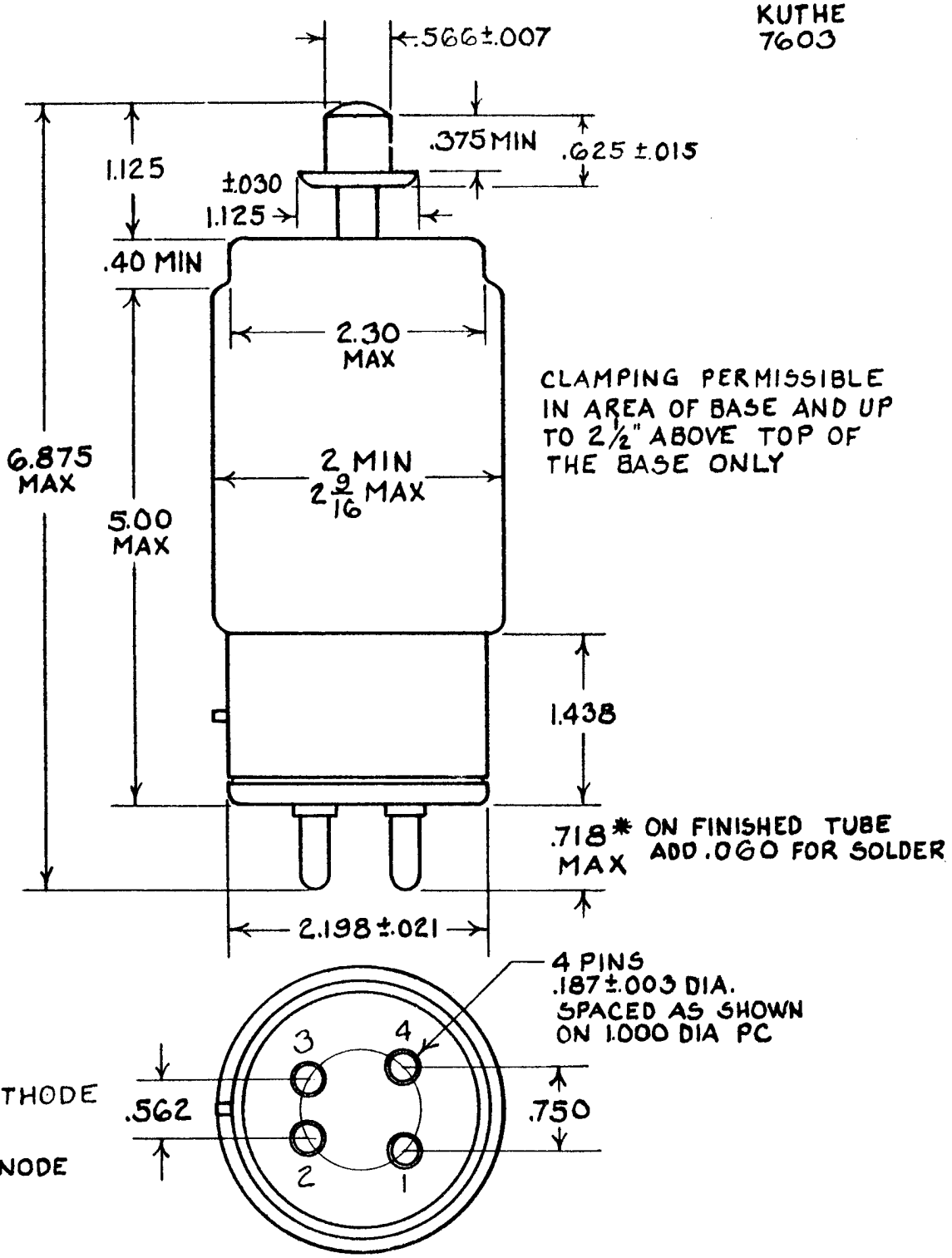

1. GRID
2. HEATER & CATHODE
3. HEATER
4. CATHODE
TOP CAP-ANODE
C1-5

SUPER JUMBO 4-PIN WITH BAYONET
A4-18 MIL-E-ID WITH CERAMIC INSERT

ITT ELECTRON TUBE DIVISION
CLIFTON, NEW JERSEY
INTERNATIONAL TELEPHONE AND TELEGRAPH CORPORATION

ITT ELECTRON TUBE DIVISION
CLIFTON, NEW JERSEY
INTERNATIONAL TELEPHONE AND TELEGRAPH CORPORATION

7640 TRAVELING WAVE TUBE

TENTATIVE

GENERAL DESCRIPTION:

The 7640 is a 1000 watt pulse traveling wave amplifier tube having 30db gain and designed primarily for use in the 2000 to 4000 mc frequency range. It is constructed in a rugged metal envelope with a helix type slow wave structure. The integral matching circuit is in 50 ohm coaxial line and is provided with UG 19 B/U Type connectors. The tube is focused by a periodic permanent magnet which is integral with the tube. A convergent beam gun and oxide impregnated cathode are used. Duty cycles up to .01 and pulse widths up to 100 microseconds can be used.

ELECTRICAL RATINGS, ABSOLUTE VALUES

Heater Voltage	6.3 (±10%)	volts	Maximum R-F Input Power	2	watts average
Heater Current	3.0	amperes	Maximum R-F Output Power	30	watts average
Maximum Anode Voltage (Note 1)	8000	volts	Maximum Duty Cycle	.01	
Maximum Shell Current	0.8	ampere peak	Maximum Pulse Width (beam)	100	microseconds
Maximum Collector Voltage	8000	volts	Maximum Cathode Current	2.0	ampere peak
Maximum Collector Dissipation	160	watts average			

ELECTRICAL INFORMATION

Maximum Frequency (Note 2)	4000	mc	Minimum Cold Transmission Loss	50	db
Minimum Frequency (Note 2)	2000	mc			

MECHANICAL INFORMATION

Type of Cathode	Oxide Impregnated Unipotential	Weight	10 pounds	maximum
Base	JETEC Designation B12-43	R-F Connections	UG-19 B/U	
Type of Envelope	Metal	Cooling Data	2 cfm of air	
Mounting Position	Any			

TYPICAL OPERATION AS POWER AMPLIFIER

Frequency	2000 to 4000	mc	Power Output (Minimum)	1000	watts peak
Anode Voltage (Note 1)	7300	volts	Gain	30	db
Cathode Current	1.4	amperes peak	Duty	.01	
Collector Voltage (tied to shell)	7300	volts	Pulse Width	5	microseconds
Collector Current	0.9	amperes peak			

NOTE 1: All voltages shown are with respect to cathode. The shell is normally operated at ground potential and the anode connection is made to the shell of the package.

NOTE 2: Useful gain and power output exists below 2000 mc and above 4000 mc and can be utilized by adjusting anode voltage to optimize the frequency range desired. However, bandwidth cannot be extended both upward and downward simultaneously and maximum gain and power output outside the normal bandwidth will be lower than rated values.

NOTE 3: Heater warmup of two minutes before applying high voltage is recommended.

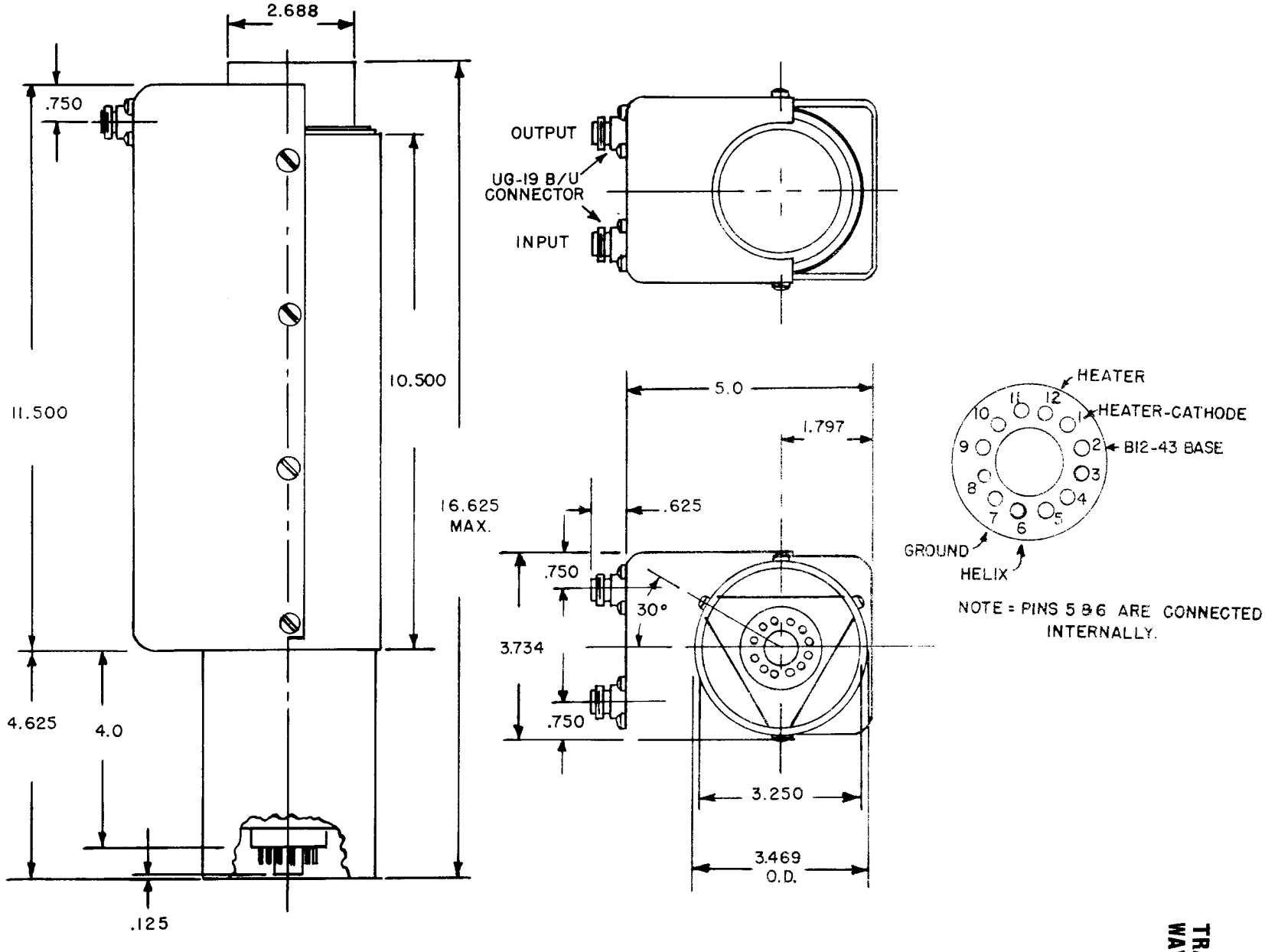

7640
TRAVELING
WAVE TUBE

ITT ELECTRON TUBE DIVISION
BOX 100 EASTON, PA. 18043
INTERNATIONAL TELEPHONE AND TELEGRAPH CORPORATION

**7665
HYDROGEN
THYRATRON

CERAMIC HYDROGEN THYRATRON

DESCRIPTION:

The 7665 is a unipotential cathode three element hydrogen thyratron equipped with a ceramic envelope. This electron tube features a hydrogen reservoir which may be connected directly across the cathode heater supply.

The ruggedness and small size possible with ceramic construction suits this thyratron to the compact modulators of high performance radars.

ELECTRICAL DATA, GENERAL	Nom.	Min.	Max.	
Heater Voltage	6.3	5.8	6.8	Volts a.c.
*Heater Current (at 6.3 volts)	6.0	5.5	6.5	Amperes
Heater (Note 1)				
*Reservoir Voltage (Note 2)	6.3	5.8	6.8	Volts a.c.
*Reservoir Current at 6.3 Volt	1.5	1.0	2.0	Amperes
*Minimum Heating Time		3		Minutes

MECHANICAL DATA, GENERAL		
Mounting Position		Any
Base		Per Outline Dwg.
Cooling (Note 3)		
Net Weight	0.5	Pounds
Dimensions		Per Outline

RATINGS:

Max. Peak Anode Voltage, forward	20.0	Kilovolts
Max. Peak Anode Voltage, inverse (Note 4)	20.0	Kilovolts
*Min. Anode supply voltage	1.0	Kilovolts d.c.
Max. Peak anode current	350	Amperes
Max. Average anode current	500	Milliamperes
Max. RMS anode current (Note 5)	6.5	Amperes a.c.
Max. epy x ib x prr	7.0×10^9	
Max. Anode current rate of rise	2000	Amps./u sec.
Peak trigger voltage (Note 6)		
Max. Anode delay time (Note 7)	0.4	Microsecond
Max. Anode delay time drift	0.1	Microsecond
Max. Time jitter (Note 8)	.005	Microsecond
Ambient Temperature	-55° to $+150^\circ$	C

*Indicates changes from data sheet dated 8-61

**This tube was previously designated by the Type Number KU-72

NOTE: Change in outline drawing from that of 7/62

Note 1:

See outline drawing.

Note 2:

Reservoir connected externally to cathode heater when tube installation is made in equipment.

Note 3:

Cooling of the anode is permissible.

Note 4:

During the first 25 microseconds after conduction, the peak inverse anode voltage shall not exceed 5 kv.

Note 5:

The root mean square anode current shall be computed as the square root of the product of peak current and the average current.

Note 6:

The pulse produced by the driver circuit shall have the following characteristics when viewed at the 7665 socket with the tube grid disconnected.

A. Amplitude	200-500 Volts
B. Duration	2 Microseconds (at 70% points)
C. Rate of Rise	1800 Volts/Microsecond (min.)
D. Impedance	50-500 Ohms

The limits of anode time delay and anode time jitter are based on the minimum trigger. Using the highest permissible trigger voltage and lowest trigger source impedance materially reduces these values below the limits specified.

Note 7:

The time of anode delay is measured between the 26 percent point on the rising portion of the unloaded grid voltage pulse and the point at which anode conduction first evidences itself on the loaded grid pulse.

Note 8:

Time jitter is measured at the 50 percent point on the anode current pulse.

Additional information for specific applications can be obtained from the

Electron Tube Applications Section
ITT Electron Tube Division
Post Office Box 100
Easton, Pennsylvania 18043

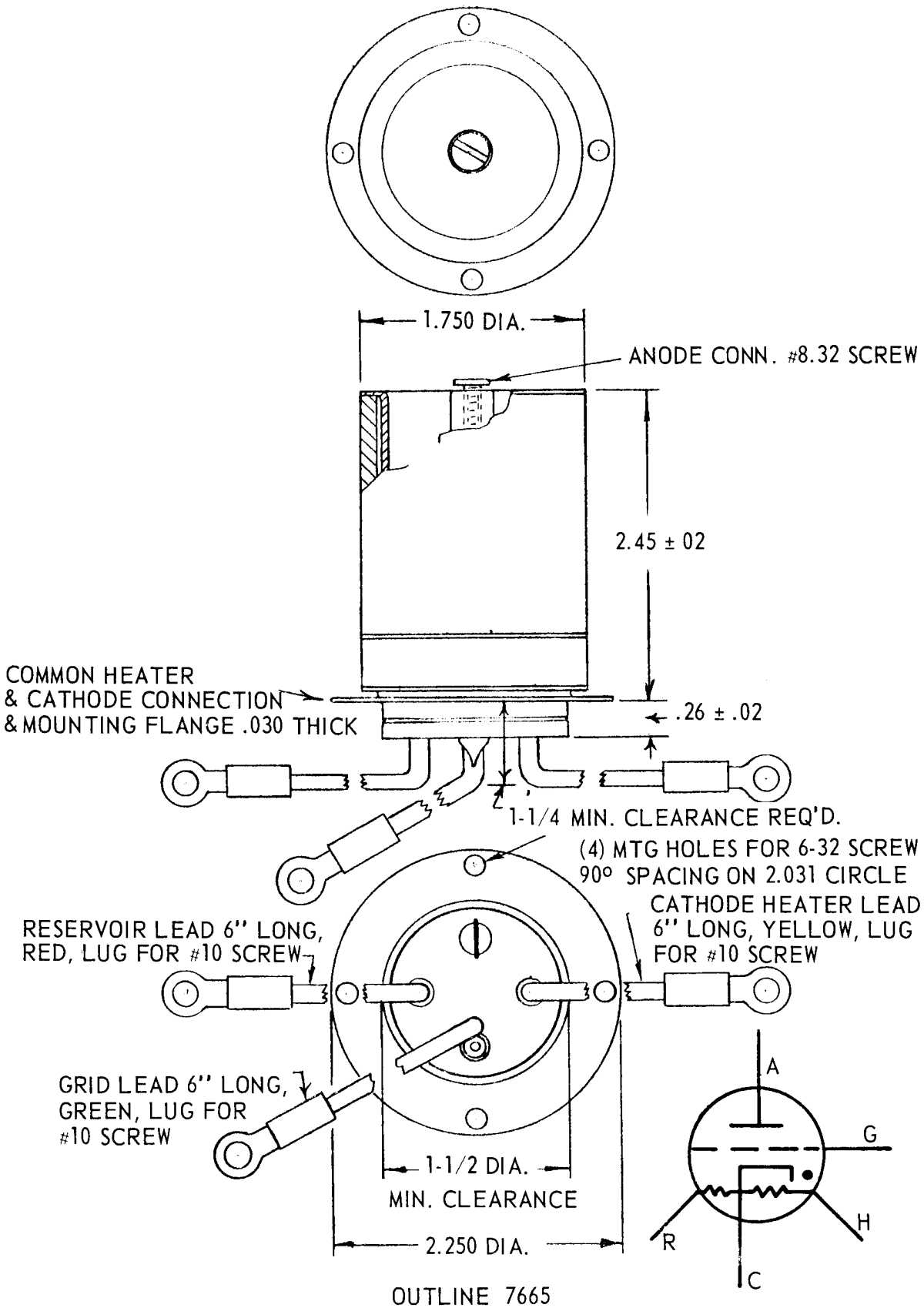

OUTLINE 7665

2-64

ITT ELECTRON TUBE DIVISION
BOX 100 EASTON, PA. 18043
INTERNATIONAL TELEPHONE AND TELEGRAPH CORPORATION

ELECTRON TUBE DEPARTMENT ■ COMPONENTS DIVISION
INTERNATIONAL TELEPHONE AND TELEGRAPH CORPORATION, CLIFTON, NEW JERSEY

KUTHE
** 7666

CERAMIC HYDROGEN THYRATRON

DESCRIPTION:

THE 7666 IS A 12.5 MEGAWATT, LARGE CERAMIC HYDROGEN THYRATRON. THE CERAMIC EXTERNAL ANODE DESIGN PERMITS OPERATION AT UNUSUALLY HIGH POWER LEVELS. THE SPECIAL FEATURES OF THE 7666 INCLUDE A HYDROGEN RESERVOIR TO MAINTAIN OPTIMUM PRESSURE AND TO INSURE LONG LIFE.

ELECTRICAL DATA, GENERAL:	NOM.	MIN.	MAX.		
HEATER VOLTAGE	6.3	5.8	6.8		VOLTS A.C.
HEATER CURRENT (AT 6.3 VOLTS)		14.0	22.0		AMPERES
HEATER (NOTE 1)					
RESERVOIR VOLTAGE (NOTE 2)		2.5	6.0		VOLTS
RESERVOIR CURRENT AT 4.5 VOLT		4.0	6.0		AMPERES
MINIMUM HEATING TIME				5	MINUTES

MECHANICAL DATA, GENERAL:		
MOUNTING POSITION	VERTICAL ONLY,	BASE DOWN
BASE		PER OUTLINE
COOLING (NOTE 3)		
NET WEIGHT	3.0	POUNDS
DIMENSIONS (SEE OUTLINE DRAWING)		

RATINGS:

MAX. PEAK ANODE VOLTAGE, FORWARD	25	KILOVOLTS
MAX. PEAK ANODE VOLTAGE, INVERSE (NOTE 4)	25	KILOVOLTS
MIN. ANODE SUPPLY VOLTAGE	5.0	KILOVOLTS D.C.
* MAX. PEAK ANODE CURRENT	1500	AMPERES
MAX. AVERAGE ANODE CURRENT	1.5	AMPERES
MAX. RMS ANODE CURRENT (NOTE 5)	40.0	AMPERES A.C.
MAX. EPY X IB X PRR	20.0 x 109	
MAX. ANODE CURRENT RATE OF RISE	5000	AMPS./U SEC.
PEAK TRIGGER VOLTAGE (NOTE 6)		
MAX. PEAK INVERSE TRIGGER VOLTAGE	650	VOLTS
MAX. ANODE DELAY TIME (NOTE 7)	0.4	MICROSECOND
MAX. ANODE DELAY TIME DRIFT	0.25	MICROSECOND
MAX. TIME JITTER (NOTE 8)	0.005	MICROSECOND
AMBIENT TEMPERATURE	-55° TO +125°	C

* INDICATES CHANGE FROM DATA SHEET DATED 7-62

** THIS TUBE WAS PREVIOUSLY DESIGNATED BY THE TYPE NUMBER KU-73.

Note 1:

See outline drawing.

Note 2:

The optimum reservoir voltage for operation in accordance with Operation (1) conditions is inscribed on the base of the tube and must be held to within ± 7.5%. Applications involving other operating conditions will necessitate the redetermination of the opt'mum reservoir voltage. Operation (1) conditions (25 kv - 1000 a - 2.5 us - 300 pps).

Note 3:

It may be desirable to employ forced air cooling under conditions of high Pb number operations. A cooling air blast of 10 cfm may be directed into the anode cup.

Note 4:

In pulsed operation, the peak inverse voltage, exclusive of a spike of .05 us maximum duration, shall not exceed 5.0 KV during the first 25 us following the anode pulse.

Note 5:

The root mean square anode current shall be computed as the square root of the product of peak current and the average current.

Note 6:

The driver pulse, measured at tube socket with thyratron grid disconnected: 550 volts minimum, 1000 volts maximum; tr = 0.35 us maximum; grid pulse duration 2.0 us minimum. Impedance of drive circuit 50 to 200 ohms.

Note 7:

The time of anode delay is measured between the 26 percent point on the rising portion of the unloaded grid voltage pulse and the point at which anode conduction first evidences itself on the loaded grid pulse.

Note 8:

Time jitter is measured at the 50 percent point on the anode current pulse.

Additional information for specific applications can be obtained from the

ITT Components Division
Electron Tube Applications Section
Post Office Box 412
Clifton, New Jersey

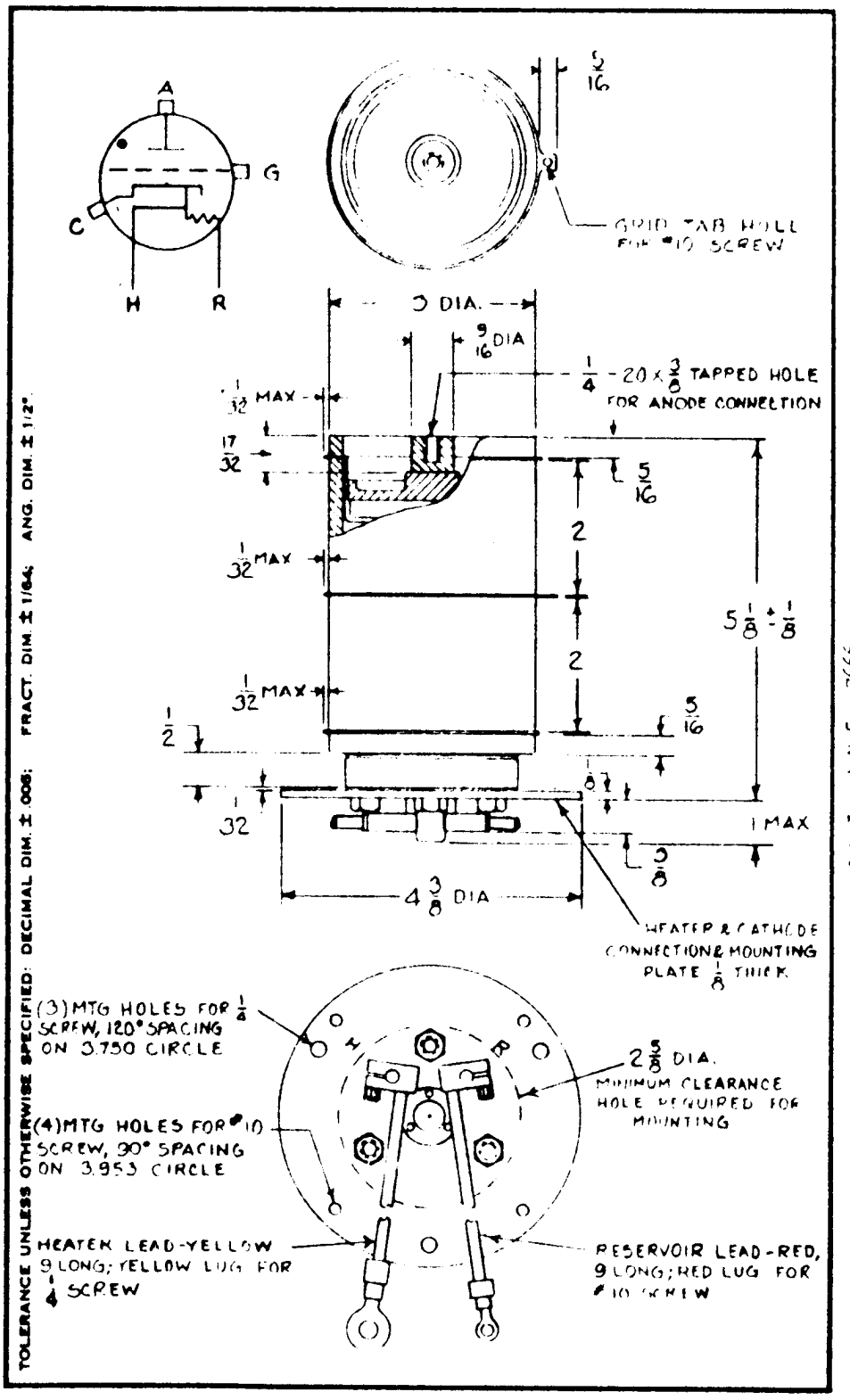
A
G
C
H
R
5/16
GRID TAB HOLE FOR #10 SCREW
D DIA.
9/16 DIA
1/4 - 20 x 3/8 TAPPED HOLE FOR ANODE CONNECTION
1/32 MAX
17/32
5/16
2
1/32 MAX
5 1/8 ± 1/8
2
1/32 MAX
5/16
1/2
1/32
1 MAX
5/8
4 3/8 DIA
HEATER & CATHODE CONNECTION & MOUNTING PLATE 1/8 THICK
(3) MTG HOLES FOR 1/4 SCREW, 120° SPACING ON 3.750 CIRCLE
2 5/8 DIA. MINIMUM CLEARANCE HOLE REQUIRED FOR MOUNTING
(4) MTG HOLES FOR #10 SCREW, 90° SPACING ON 3.953 CIRCLE
HEATER LEAD-YELLOW 9 LONG; YELLOW LUG FOR 1/4 SCREW
RESERVOIR LEAD-RED, 9 LONG; RED LUG FOR #10 SCREW
TOLERANCE UNLESS OTHERWISE SPECIFIED: DECIMAL DIM. ± .005; FRACT. DIM. ± 1/64; ANG. DIM. ± 1/2°
OUTLINE 7666

ELECTRON TUBE DEPARTMENT ■ COMPONENTS DIVISION
INTERNATIONAL TELEPHONE AND TELEGRAPH CORPORATION, CLIFTON, NEW JERSEY

KUTHE
**7667

CERAMIC HYDROGEN THYRATRON

DESCRIPTION:

* THE 7667 IS A 40 MEGAWATT, LARGE CERAMIC HYDROGEN THYRATRON. THE CERAMIC EXTERNAL ANODE DESIGN PERMITS OPERATION AT UNUSUALLY HIGH POWER LEVELS. THE SPECIAL FEATURES OF THE 7667 INCLUDE A HYDROGEN RESERVOIR TO MAINTAIN OPTIMUM PRESSURE AND TO INSURE LONG LIFE.

ELECTRICAL DATA, GENERAL:	Nom.	Min.	Max.		
HEATER VOLTAGE	6.3	5.8	6.8		VOLTS A.C.
HEATER CURRENT (AT 6.3 VOLTS)		25.0	40.0		AMPERES
HEATER (NOTE 1)					
RESERVOIR VOLTAGE (NOTE 2)		3.5	5.5		VOLTS
* RESERVOIR CURRENT AT 4.5 VOLT		8.0	20.0		AMPERES
MINIMUM HEATING TIME				10	MINUTES

MECHANICAL DATA, GENERAL:		
MOUNTING POSITION	VERTICAL ONLY, BASE DOWN	
BASE (PER OUTLINE)		
COOLING (NOTE 3)		
NET WEIGHT	11.5	POUNDS
DIMENSIONS (SEE OUTLINE DRAWING)		

RATINGS:

MAX. PEAK ANODE VOLTAGE, FORWARD	33.0	KILOVOLTS
MAX. PEAK ANODE VOLTAGE, INVERSE (NOTE 4)	33.0	KILOVOLTS
MIN. ANODE SUPPLY VOLTAGE	2.5	KILOVOLTS D.C.
* MAX. PEAK ANODE CURRENT	2400	AMPERES
MAX. AVERAGE ANODE CURRENT	4.0	AMPERES
MAX. RMS ANODE CURRENT (NOTE 5)	90	AMPERES A.C.
MAX. EPY X IB X PRR	40×10^9	
MAX. ANODE CURRENT RATE OF RISE	10,000	AMPS./U SEC.
PEAK TRIGGER VOLTAGE (NOTE 6)		
MAX. PEAK INVERSE TRIGGER VOLTAGE	750	VOLTS
MAX. ANODE DELAY TIME (NOTE 7)	0.4	MICROSECOND
MAX. ANODE DELAY TIME DRIFT	0.25	MICROSECOND
MAX. TIME JITTER (NOTE 8)	.005	MICROSECOND
AMBIENT TEMPERATURE	-55° TO + 150°	C

* INDICATES CHANGES FROM DATA SHEET DATED 10-60.

** THIS TUBE WAS PREVIOUSLY DESIGNATED BY THE TYPE NUMBER KU-74.

Note 1:

Cathode connected to center of cathode heater.

Note 2:

Reservoir voltage is marked on the base of each 7667/KU-74. This is the correct voltage for one typical operating condition but is not the optimum value for all types of operation. This value may be used initially in new applications and the optimum value may then be obtained by exploring the range of voltage on either side of that marked on the tube. Excess reservoir voltage will result in a failure of the thyratron to deionize between pulses (continuous conduction). Insufficient reservoir voltage will result in excess anode dissipation as indicated by heating of the anode. The optimum reservoir voltage is the midpoint between these two extremes. In certain applications it may be necessary to provide a regulated source to assure operation within the permissible range of reservoir voltages.

Note 3:

Cooling of the anode is permissible.

Note 4:

During the first 25 microseconds after conduction, the peak inverse anode voltage shall not exceed 5 kv.

Note 5:

The root mean square anode current shall be computed as the square root of the product of peak current and the average current.

Note 6:

The pulse produced by the driver circuit shall have the following characteristics when viewed at the 7667/KU-74 socket with the tube removed.

A.	Amplitude	750-2500 Volts
B.	Duration	2 Microseconds (at 70% points)
C.	Time of Rise	0.35 Microseconds (max.)
D.	Impedance	10-25 Ohms

The limits of anode time delay and anode time jitter are based on the minimum trigger. Using the highest permissible trigger voltage and lowest trigger source impedance materially reduces these values below the limits specified.

Note 7:

The time of anode delay is measured between the 26 per cent point on the rising portion of the unloaded grid voltage pulse and the point at which anode conduction first evidences itself on the loaded grid pulse.

Note 8:

Time jitter is measured at the 50% point on the anode current pulse.

Additional information for specific applications can be obtained from the

Electron Tube Applications Section, ITT Components Division
Post Office Box 412, Clifton, New Jersey

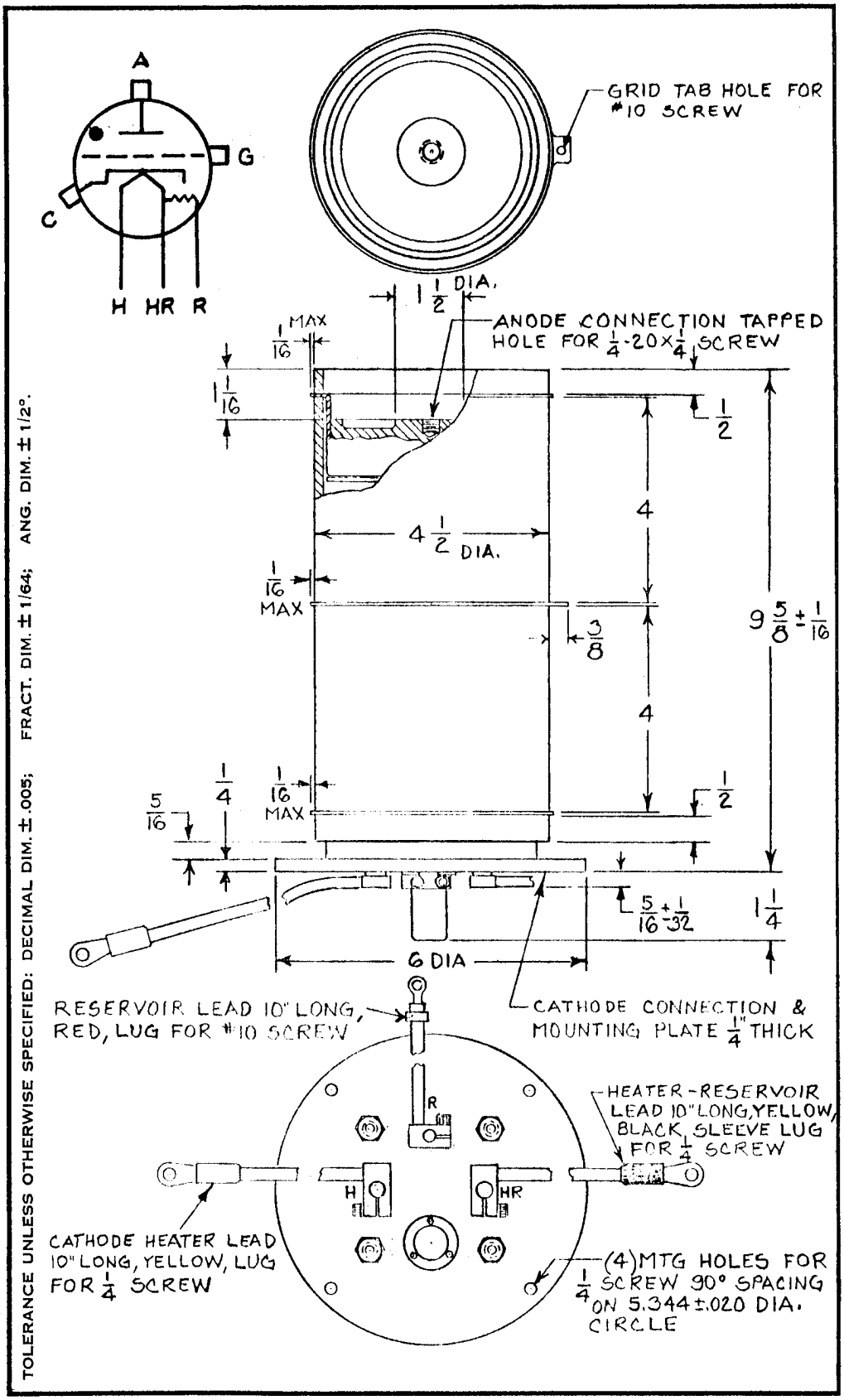

TOLERANCE UNLESS OTHERWISE SPECIFIED: DECIMAL DIM. ± .005; FRACT. DIM. ± 1/64; ANG. DIM. ± 1/2°.

OUTLINE 7667

ELECTRON TUBE DEPARTMENT ■ COMPONENTS DIVISION
INTERNATIONAL TELEPHONE AND TELEGRAPH CORPORATION, CLIFTON, NEW JERSEY

KUTHE
** 7782

CERAMIC HYDROGEN THYRATRON

DESCRIPTION:

THE 7782/KU-71 IS A UNIPOTENTIAL CATHODE THREE ELEMENT HYDROGEN THYRATRON OF CERAMIC METAL CONSTRUCTION DESIGNED FOR USE IN COMPACT MODULATORS FOR HIGH PERFORMANCE RADARS AND FOR MISSILE APPLICATIONS.

ELECTRICAL DATA, GENERAL:

	Nom.	Min.	Max.	
Heater Voltage	6.3	5.8	6.8	Volts A.C.
* Heater Current (at 6.3 volts)	5.5	3.5	7.0	Amperes
* Reservoir Voltage	6.3	5.8	6.8	Volts A.C.
* Reservoir Current (at 6.3 volts)	1.5	1.0	2.5	Amperes
* Minimum Heating Time		3		Minutes

MECHANICAL DATA, GENERAL:

Mounting Position	Any
Dimensions	Per Outline

RATINGS:

* Max. Peak Anode Voltage, Forward	12.0	Kilovolts
* Max. Peak Anode Voltage, Inverse (Note 1)	12.0	Kilovolts
Min. Anode Supply Voltage	0.3	Kilovolts D.C.
Max. Peak Anode Current	200.0	Amperes
Max. Average Anode Current	200.0	Milliamperes
Max. RMS Anode Current (Note 2)	5.0	Amperes A.C.
Max. eby x ibx x prr (Pb)	4.0×10^9	
Max. Anode Current, Rate of Rise	2000	Amps./u sec.
Peak Trigger Voltage (Note 3)		
Max. Peak Inverse Trigger Voltage	200	Volts
Max. Anode Delay Time (Note 4)	0.50	u second
Max. Anode Delay Time Drift	0.10	u second
Max. Time Jitter (Note 5)	.005	u second
Ambient Temperature	-50° to +150°	C
Shock Rating	500	G.
Vibration	30	G.

* Indicates changes from data sheet dated 10-60

** This tube was previously designated by the Type Number KU-71.

NOTE 1:

THE PEAK INVERSE VOLTAGE SHOULD NOT EXCEED 2.5 KV DURING THE FIRST 25 MICROSECONDS AFTER THE PULSE.

NOTE 2:

THE ROOT MEAN SQUARE ANODE CURRENT SHALL BE COMPUTED AS THE SQUARE ROOT OF THE PRODUCT OF THE PEAK CURRENT AND THE AVERAGE CURRENT.

NOTE 3:

THE DRIVER PULSE, MEASURED AT THE TUBE SOCKET WITH THE THYRATRON GRID DISCONNECTED SHOULD HAVE THE FOLLOWING CHARACTERISTICS:

A.	VOLTAGE	175 VOLTS (MIN.)
B.	DURATION	2 MICROSECONDS (AT 70 PERCENT POINTS)
C.	IMPEDANCE	1500 OHMS (MAX.)
D.	TIME OF RISE	0.5 MICROSECOND (MAX.)

THE LIMITS OF ANODE TIME DELAY AND ANODE TIME JITTER ARE BASED ON THE MINIMUM TRIGGER. USING THE HIGHEST PERMISSIBLE TRIGGER VOLTAGE AND LOWEST TRIGGER SOURCE IMPEDANCE MATERIALLY REDUCES THESE VALUES BELOW THE LIMITS SPECIFIED.

NOTE 4:

THE TIME OF ANODE DELAY IS MEASURED BETWEEN THE 26 PERCENT POINT ON THE RISING PORTION OF THE UNLOADED GRID VOLTAGE PULSE AND THE POINT AT WHICH EVIDENCE OF ANODE CONDUCTION FIRST APPEARS ON THE LOADED GRID PULSE.

NOTE 5:

TIME JITTER IS MEASURED AT THE 50 PERCENT POINT ON THE ANODE CURRENT PULSE.

ADDITIONAL INFORMATION FOR SPECIFIC APPLICATIONS CAN BE OBTAINED FROM THE

ELECTRON TUBE APPLICATIONS SECTION
ITT COMPONENTS DIVISION
POST OFFICE BOX 412
CLIFTON, NEW JERSEY

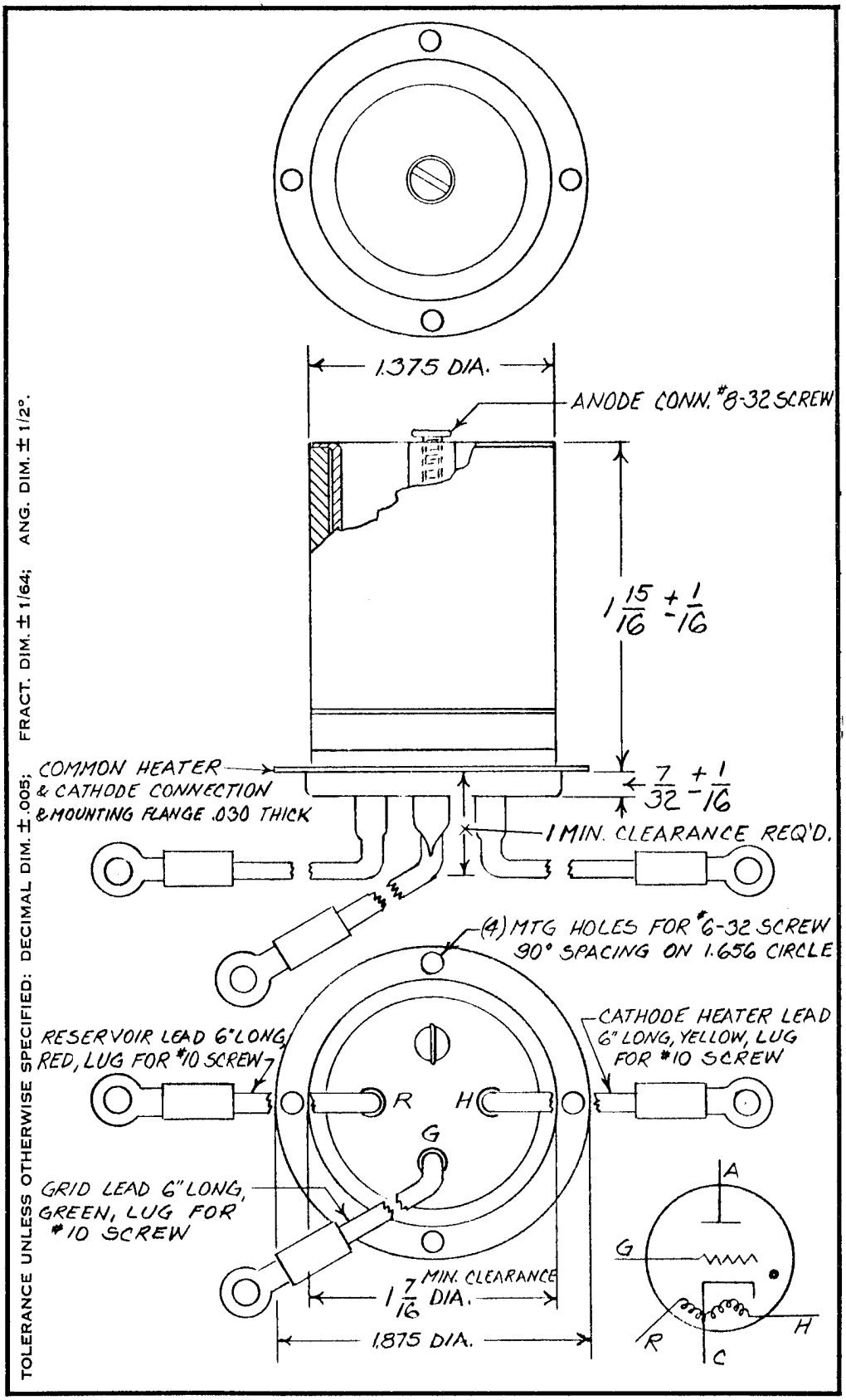
1.375 DIA.
ANODE CONN. #8-32 SCREW
1 15/16 +1/16 -1/16
COMMON HEATER & CATHODE CONNECTION & MOUNTING FLANGE .030 THICK
7/32 +1/16
1 MIN. CLEARANCE REQ'D.
(4) MTG HOLES FOR #6-32 SCREW 90° SPACING ON 1.656 CIRCLE
RESERVOIR LEAD 6" LONG, RED, LUG FOR #10 SCREW
CATHODE HEATER LEAD 6" LONG, YELLOW, LUG FOR #10 SCREW
R
H
G
GRID LEAD 6" LONG, GREEN, LUG FOR #10 SCREW
1 7/16 DIA. MIN. CLEARANCE
1.875 DIA.
A
G
R
H
C
TOLERANCE UNLESS OTHERWISE SPECIFIED: DECIMAL DIM. ±.005; FRACT. DIM. ±1/64; ANG. DIM. ±1/2°.
OUTLINE 7782

ELECTRON TUBE DEPARTMENT ■ COMPONENTS DIVISION
INTERNATIONAL TELEPHONE AND TELEGRAPH CORPORATION, CLIFTON, NEW JERSEY

KUTHE
7866 **
KU-274

CERAMIC HYDROGEN THYRATRON

DESCRIPTION:

* THE 7866/KU-274 IS A 60 MEGAWATT PEAK TETRODE TYPE CERAMIC ENVELOPE HYDROGEN THYRATRON. GREAT CARE HAS BEEN EXERCISED IN THE DESIGN OF THIS TUBE IN ORDER TO INSURE AN EQUAL DISTRIBUTION OF CAPACITY ACROSS THE GAPS. THIS MAKES THE USE OF COMPENSATING CAPACITORS UNNECESSARY. PROVISION FOR LIQUID COOLING OF THE ANODE IS PROVIDED FOR OPERATION AT HEAT FACTORS ABOVE 40×10^9.

ELECTRICAL DATA, GENERAL:

	NOM.	MIN.	MAX.	
HEATER VOLTAGE	6.3	5.8	6.8	VOLTS AC
HEATER CURRENT (AT 6.3 VOLTS)		25.0	35.0	AMPERES
HEATER (NOTE 1)				
RESERVOIR VOLTAGE (NOTE 2)		3.5	5.5	VOLTS
* RESERVOIR CURRENT AT 4.5 VOLTS		8.0	20.0	AMPERES
MINIMUM HEATING TIME			10	MINUTES

MECHANICAL DATA, GENERAL:

MOUNTING POSITION	VERTICAL ONLY,	BASE DOWN
BASE (PER OUTLINE)		
COOLING (NOTE 3)		
NET WEIGHT	15	POUNDS
DIMENSIONS (SEE OUTLINE DRAWING)		

RATINGS:

MAX. PEAK ANODE VOLTAGE, FORWARD	50.0	KILOVOLTS
MAX. PEAK ANODE VOLTAGE, INVERSE (NOTE 4)	50.0	KILOVOLTS
MIN. ANODE SUPPLY VOLTAGE (NOTE 5)	2.5	KILOVOLTS
MAX. PEAK ANODE CURRENT	2400	AMPERES
MAX. AVERAGE ANODE CURRENT	4.0	AMPERES
MAX. RMS ANODE CURRENT (NOTE 6)	90	AMPERES AC
MAX. EPY X IB X PRR	55×10^9	
MAX. ANODE CURRENT RATE OF RISE	10,000	AMPS./U SEC
PEAK TRIGGER VOLTAGE (NOTE 7)		
MAX. PEAK INVERSE TRIGGER VOLTAGE	650	VOLTS
MAX. ANODE DELAY TIME (NOTE 8)	0.4	MICROSECOND
MAX. ANODE DELAY TIME DRIFT	* 0.1	MICROSECOND
MAX. TIME JITTER (NOTE 9)	.005	MICROSECOND
AMBIENT TEMPERATURE	-55° TO $+150^\circ$	C

* INDICATES CHANGES FROM DATA SHEET DATED 6-61

** THIS TUBE WAS PREVIOUSLY DESIGNATED BY THE TYPE NUMBER KU-274.

Note 1:

Cathode connected to center of cathode heater.

Note 2:

Reservoir voltage is marked on the base of each 7866/KU-274. This is the correct voltage for one typical operating condition but is not the optimum value for all types of operation. This value may be used initially in new applications and the optimum value may then be obtained by exploring the range of voltage on either side of that marked on the tube. Excess reservoir voltage will result in a failure of the thyratron to deionize between pulses (continuous conduction). Insufficient reservoir voltage will result in excess anode dissipation as indicated by heating of the anode. The anode dissipation must not be permitted to exceed 1500 watts as measured in the cooling water. A useful formula for this determination follows:

$$P = 264\ Q_w\ (T_2 - T_1)$$

P	=	Power in Watts
Q_w	=	Flow in gallons/minute
$T_2 - T_1$	=	Outlet and Inlet water temperatures in degrees Kelvin, respectively

The optimum reservoir voltage is the midpoint between these two extremes. In certain applications it may be necessary to provide a regulated source to assure operation within the permissible range of reservoir voltages.

Note 3:

Cooling of the anode is required for operation at heat factors above 30 X 10^9. Above this value, forced cooling is necessary. This may be accomplished by airblast into the anode cup for modest requirements (10 CFM), by compressed air directed through the cooling chamber, and by liquid coolants circulated through the cooling chamber. A minimum flow of 1 gallon per minute of water is required. The water inlet temperature shall not be less than 5°C, nor the outlet temperature higher than 95°C. Maximum water pressure under a normal condition is 50 psi (100 psi may be tolerated for short periods). Pressure drop is approximately 1 psi.

Note 4:

During the first 25 microseconds after conduction, the peak inverse anode voltage shall not exceed 10 KV.

NOTE 5:

A RESISTANCE DIVIDER OF 40 MEGOHMS SHALL BE CONNECTED BETWEEN ANODE AND CATHODE. THE CENTER TOP OF THIS DIVIDER WILL BE CONNECTED TO THE SECOND OR GRADIENT GRID OF THE 7866. IT IS RECOMMENDED THAT THIS ARRANGEMENT BE EMPLOYED WHETHER LOW VOLTAGE OPERATION IS REQUIRED OR NOT. THIS DIVIDER IS A NECESSITY FOR KEYED GRID OPERATION.

NOTE 6:

THE ROOT MEAN SQUARE ANODE CURRENT SHALL BE COMPUTED AS THE SQUARE ROOT OF THE PRODUCT OF PEAK CURRENT AND THE AVERAGE CURRENT.

NOTE 7:

THE PULSE PRODUCED BY THE DRIVER CIRCUIT SHALL HAVE THE FOLLOWING CHARACTERISTICS WHEN VIEWED AT THE 7667/KU-74 SOCKET WITH THE TUBE REMOVED.

A.	AMPLITUDE	750 - 2500 VOLTS
B.	DURATION	2 MICROSECONDS (AT 70% POINTS)
C.	TIME OF RISE	0.35 MICROSECONDS (MIN.)
D.	IMPEDANCE	10 - 25 OHMS

THE LIMITS OF ANODE TIME DELAY AND ANODE TIME JITTER ARE BASED ON THE MINIMUM TRIGGER. USING THE HIGHEST PERMISSIBLE TRIGGER VOLTAGE AND LOWEST TRIGGER SOURCE IMPEDANCE MATERIALLY REDUCES THESE VALUES BELOW THE LIMITS SPECIFIED.

NOTE 8:

THE TIME OF ANODE DELAY IS MEASURED BETWEEN THE 26 PER CENT POINT ON THE RISING PORTION OF THE UNLOADED GRID VOLTAGE PULSE AND THE POINT AT WHICH ANODE CONDUCTION FIRST EVIDENCES ITSELF ON THE LOADED GRID PULSE.

NOTE 9:

TIME JITTER IS MEASURED AT THE 50% POINT ON THE ANODE CURRENT PULSE.

ADDITIONAL INFORMATION FOR SPECIFIC APPLICATIONS CAN BE OBTAINED FROM THE

ELECTRON TUBE APPLICATIONS SECTION
ITT COMPONENTS DIVISION
POST OFFICE BOX 412
CLIFTON, NEW JERSEY

ANODE TERMINAL
1/4-20x1/2 LG. RH BRASS SCREW N.P.
1/4 BRASS WASHER 1/2 O.D. N.P.

OUTLINE
7866

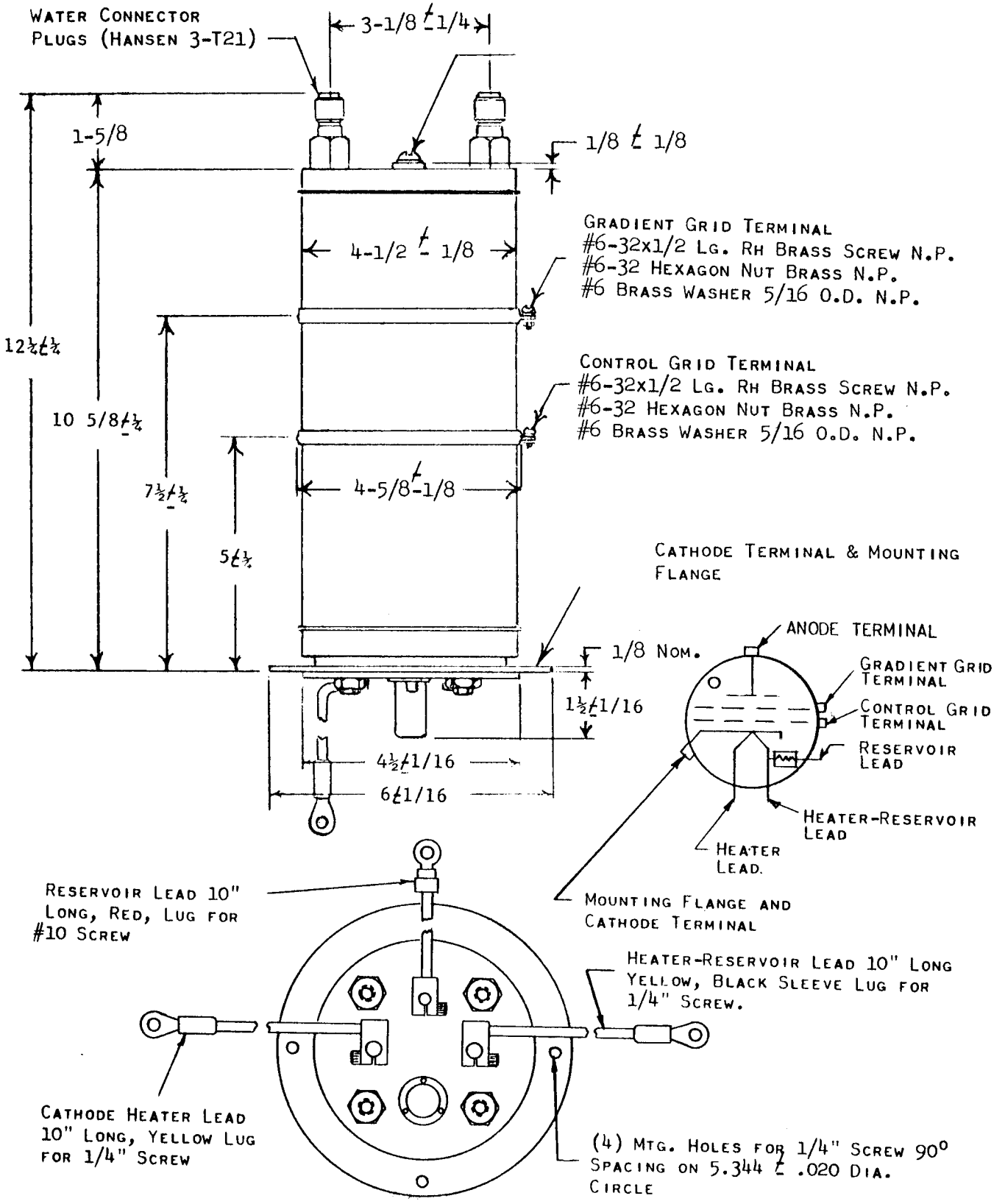

OUTLINE - 7866

CERAMIC
HYDROGEN
THYRATRON
KUTHE
7890

TENTATIVE

DESCRIPTION

The 7890 is a 40 megawatt peak tetrode type ceramic envelope hydrogen thyratron. Great care has been exercised in the design of the Kuthe tube in order to insure an equal distribution of capacity across the gaps. This makes the use of compensating capacitors unnecessary. Provision for liquid cooling of the anode is provided for operation at Heat Factors above 40×10^9.

GENERAL CHARACTERISTICS

Electrical Data	Nom.	Min.	Max.	
Heater Voltage	6.3	6.0	6.6	Volts AC
Heater Current (at 6.3 volts)		25.0	35.0	Amperes
Heater (Note 1)				
Reservoir Voltage (Note 2)		2.5	5.5	Volts
Reservoir Current at 4.5 Volts		8.0	14.0	Amperes
Heating Time		15		Minutes

Mechanical Data		
Mounting Position	Vertical only, Base Down	
Base (Per Outline)		
Cooling (Note 3)		
Net Weight	15	Pounds
Dimensions (See Outline Drawing)		

MAXIMUM RATINGS

Max. Peak Anode Voltage, Forward	40.0	Kilovolts
Max. Peak Anode Voltage, Inverse (Note 4)	40.0	Kilovolts
Min. Anode Supply Voltage (Note 5)	3.5	Kilovolts
Max. Peak Anode Current	2400	Amperes
Max. Average Anode Current	2.6	Amperes
Max. RMS Anode Current (Note 6)	75	Amperes AC
Max. epy x Ib x prr	55×10^9	
Max. Anode Current Rate of Rise	10,000	Amps./ u sec
Peak Trigger Voltage (Note 7)		
Max. Peak Inverse Trigger Voltage	650	Volts
Max. Anode Delay Time (Note 8)	1.0	Microseconds
Max. Anode Delay Time Drift	0.1	Microseconds
Max. Time Jitter (Note 9)	.005	Microseconds
Ambient Temperature	-55° to $+90^\circ$	C

Note 1: Cathode connected to center of cathode heater.

Note 2: Reservoir voltage is marked on the base of each tube. This is the correct voltage for one typical operating condition but is not the optimum value for all types of operation. This value may be used initially in new applications and the optimum value may then be obtained by exploring the range of voltage on either side of that marked on the tube. Excess reservoir voltage will result in a failure of the thyratron to deionize between pulses (continuous conduction). Insufficient reservoir voltage will result in excess anode dissipation as indicated by heating of the anode. The anode dissipation must not be permitted to exceed 1500 watts as measured in the cooling water. A useful formula for this determination follows:

$$P = 264\ Qw\ (T_2 - T_1)$$

P = power in watts
Q_W = flow in gallons-minute
$T_2 - T_1$ = outlet and inlet water temperatures in degrees Kelvin, respectively

The optimum reservoir voltage is the midpoint between these two extremes. In certain applications it may be necessary to provide a regulated source to assure operation within the permissible range of reservoir voltages.

Note 3: Cooling of the anode is required for operation at heat factors above 30×10^9. Above this value, forced cooling is necessary. This may be accomplished by airblast into the anode cup for modest requirements (10 CFMO, by compressed air directed through the cooling chamber, any by liquid coolants circulated through the cooling chamber). A minimum flow of 1 gallon per minute of water is required. The water inlet temperature shall not be less than 5°C, nor the outlet temperature higher than 95°C.

Note 4: During the first 25 microseconds after conduction, the peak inverse anode voltage shall not exceed 10 KV.

Note 5: A resistance divider of 40 megohms shall be connected between anode and cathode. The center top of this divider will be connected to the second or gradient grid of the tube. It is recommended that this arrangement be employed whether low voltage operation is required or not. This divider is a necessity for keyed grid operation.

Note 6: The root mean square anode current shall be computed as the square root of the product of peak current and the average current.

Note 7: The pulse produced by the driver circuit shall have the following characteristics when viewed at the socket with the tube removed.

A.	Amplitude	750 - 2500 Volts
B.	Duration	2 Microseconds (at 70% points)
C.	Time of Rise	0.35 Microseconds (min.)
D.	Impedance	10 - 25 Ohms

The limits of anode time delay and anode time jitter are based on the minimum trigger. Using the highest permissible trigger voltage and lowest trigger source impedance materially reduces these values below the limits specified.

Note 8: The time of anode delay is measured between the 26 per cent point on the rising portion of the unloaded grid voltage pulse and the point at which anode conduction first evidences itself on the loaded grid pulse.

Note 9: Time jitter is measured at the 50% point on the anode current pulse.

Additional information for specific applications can be obtained from the

ITT Electron Tube Division
Applications Section
P. O. Box 100
Easton, Pennsylvania

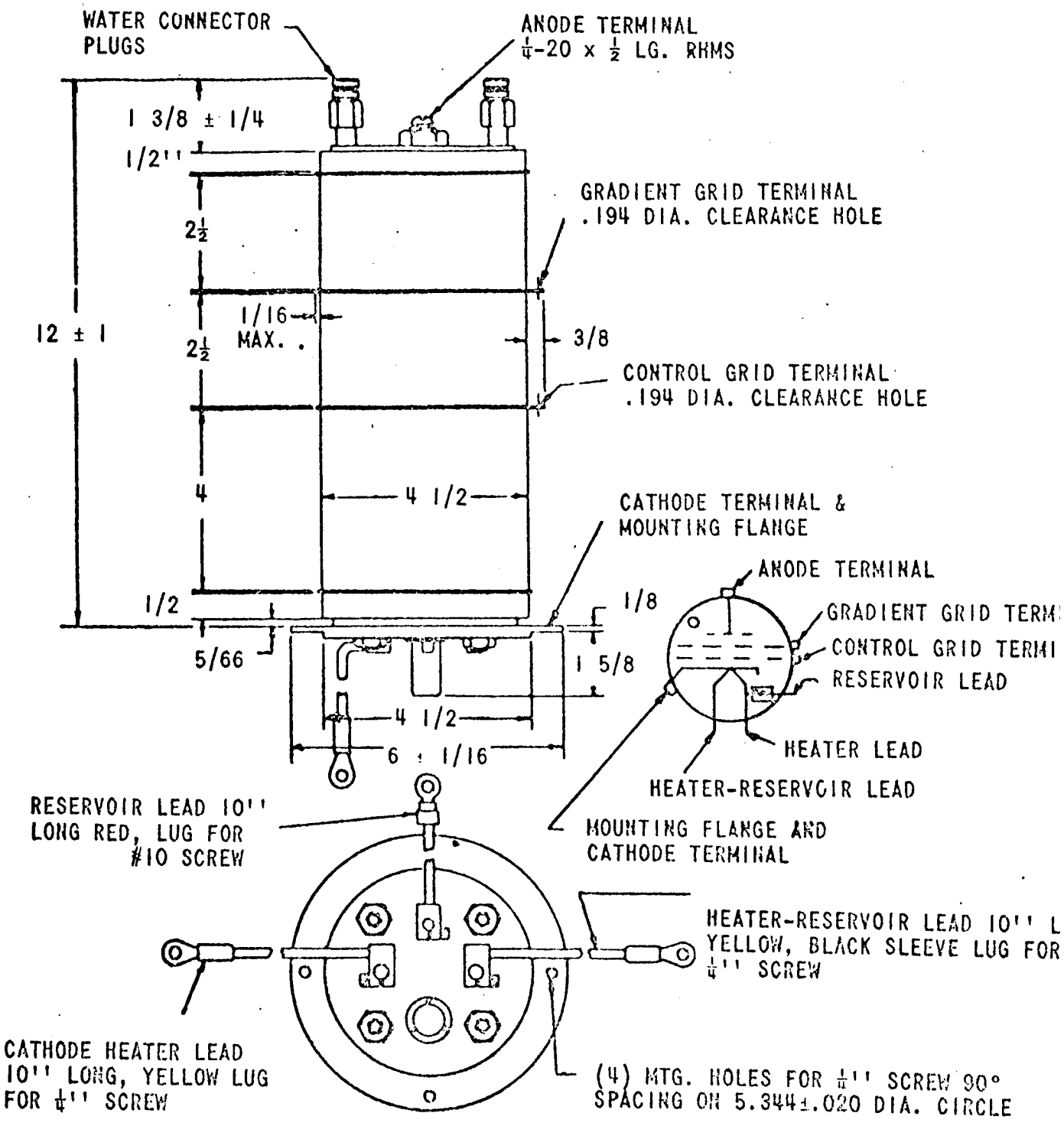
WATER CONNECTOR PLUGS
ANODE TERMINAL
¼-20 x ½ LG. RHMS
1 3/8 ± 1/4
1/2"
2½
2½
12 ± 1
1/16 MAX.
3/8
GRADIENT GRID TERMINAL
.194 DIA. CLEARANCE HOLE
CONTROL GRID TERMINAL
.194 DIA. CLEARANCE HOLE
4
4 1/2
CATHODE TERMINAL &
MOUNTING FLANGE
1/2
5/66
1/8
1 5/8
4 1/2
6 ± 1/16
ANODE TERMINAL
GRADIENT GRID TERM
CONTROL GRID TERMI
RESERVOIR LEAD
HEATER LEAD
HEATER-RESERVOIR LEAD
RESERVOIR LEAD 10"
LONG RED, LUG FOR
#10 SCREW
MOUNTING FLANGE AND
CATHODE TERMINAL
HEATER-RESERVOIR LEAD 10" L
YELLOW, BLACK SLEEVE LUG FOR
¼" SCREW
CATHODE HEATER LEAD
10" LONG, YELLOW LUG
FOR ¼" SCREW
(4) MTG. HOLES FOR ¼" SCREW 90°
SPACING ON 5.344±.020 DIA. CIRCLE

engineering

TUBE DATA

F-7328
POWER TRIODE

Components Division

DESCRIPTION

THE F-7328 IS A THREE ELECTRODE TUBE DESIGNED FOR USE AS A MODULATOR, ITS ELECTRICAL CHARACTERISTICS MAKING IT PARTICULARLY SUITABLE FOR CLASS AB_1 CIRCUITS. THE ANODE IS CAPABLE OF DISSIPATING 20 KW DURING CONTINUOUS COMMERCIAL SERVICE. COOLING IS ACCOMPLISHED BY FORCED AIR. THE CATHODE IS A THORIATED TUNGSTEN FILAMENT OF MESH CONSTRUCTION AND MAY BE OPERATED ON D-C OR SINGLE PHASE A-C. MAXIMUM RATINGS APPLY FOR AUDIO FREQUENCY USE ONLY.

ELECTRICAL

FILAMENT VOLTAGE	7.0	VOLTS
FILAMENT CURRENT	260	AMPERES
FILAMENT STARTING CURRENT	1000	AMPERES
AMPLIFICATION FACTOR		
E_c = -450 v. I_B = 5.0 AMPS.	5.5	
DIRECT INTER-ELECTRODE CAPACITANCE		
GRID PLATE	88	UUF
GRID FILAMENT	70	UUF
PLATE FILAMENT	12	UUF

from JEDEC release #2990, Oct. 10, 1960

MECHANICAL

Mounting Position			Vertical, Anode up or down	
Type of Cooling			Forced Air	
Maximum Incoming Air Temperature			45	°C
Maximum Glass & Seal Temperature (Note 1)			180	°C
Maximum Radiator Core Temperature (Note 1)			180	°C
Required Air Flow on Anode (Note 2)				
Plate Dissipation - KW	20	15	10	
Air Flow - cfm	1700	1250	800	
Static Pressure - inches of water	6	3.5	2	
Weight, approximate			72	lbs.

Note 1

A temperature sensitive lacquer manufactured by the Tempil Corporation, 132 W. 22nd Street, New York 11, New York is convenient for this measurement.

Note 2

Cooling air should be applied before or simultaneously with the application of any voltages. Air flow should continue approximately 2 minutes after the removal of any voltages. These ratings apply if the load is essentially resistive.

MAXIMUM RATINGS AND TYPICAL OPERATING CONDITIONS

AUDIO-FREQUENCY POWER AMPLIFIER AND MODULATOR -- CLASS AB_1

MAXIMUM RATINGS, ABSOLUTE VALUES	CCS	
D-C PLATE VOLTAGE	8	KV
MAXIMUM SIGNAL D-C PLATE CURRENT (NOTE 3)	10	AMPERES
MAXIMUM SIGNAL PLATE INPUT (NOTE 3)	50	KW
PLATE DISSIPATION (NOTE 3)	20	KW
GRID DISSIPATION	800	WATTS

TYPICAL OPERATION
(UNLESS OTHERWISE SPECIFIED, VALUES ARE FOR TWO TUBES)

D-C PLATE VOLTAGE	6000	8000	VOLTS
D-C GRID VOLTAGE, APPROX. (NOTE 4)	-1200	-1600	VOLTS
PEAK A-F GRID-TO-GRID VOLTAGE	2300	3100	VOLTS
ZERO SIGNAL D-C PLATE CURRENT	.5	.5	AMPERES
MAXIMUM SIGNAL D-C PLATE CURRENT	12	6.4	AMPERES
PEAK A-F PLATE-TO-PLATE VOLTAGE	6700	12500	VOLTS
EFFECTIVE LOAD RESISTANCE PLATE-TO-PLATE	710	2700	OHMS
MAXIMUM SIGNAL DRIVING POWER	0	0	WATTS
MAXIMUM SIGNAL POWER OUT	30	33	KW

NOTE 3

AVERAGED OVER ANY AUDIO FREQUENCY CYCLE OF SINE-WAVE FORM

NOTE 4

ADJUST TO STATED ZERO SIGNAL DC PLATE CURRENT. EFFECTIVE GRID CIRCUIT RESISTANCE NOT TO EXCEED 200,000 OHMS.

MODULATOR TUBE-PULSE OPERATION

MAXIMUM RATING, ABSOLUTE VALUES

D-C PLATE VOLTAGE		20	KV
PEAK POSITIVE VOLTAGE (INSTANTANOUES)		25	KV
D-C GRID VOLTAGE		-6	KV
PEAK POSITIVE GRID VOLTAGE		2.5	KV
PULSE CATHODE CURRENT	160*	100	AMPERES
GRID DISSIPATION		800	WATTS
DUTY FACTOR		.01	
PULSE LENGTH		2000	USEC.

TYPICAL OPERATION

D-C PLATE VOLTAGE	14	17	KV
PULSE PLATE CURRENT	68	80	AMPERES
D-C GRID VOLTAGE	-3300	-4200	VOLTS
PULSE GRID CURRENT	0	12	AMPERES
PULSE POSITIVE GRID VOLTAGE	0	1000	VOLTS
PULSE GRID DRIVE POWER	0	12	KW
PLATE OUTPUT VOLTAGE	7.5	14	KV
PULSE OUTPUT POWER	510	1200	KW

* THIS RATING APPLIES ONLY UNDER ELEVATED FILAMENT TEMPERATURE AS SPECIFIED BY E_F=7.6 VOLTS. REDUCED LIFE WILL RESULT AS A CONSEQUENCE OF CONTINUED OPERATION AT THIS VALUE.

ADDITIONAL INFORMATION FOR SPECIFIC APPLICATIONS CAN BE OBTAINED FROM THE
ELECTRON TUBE APPLICATIONS SECTION - ITT COMPONENTS DIVISION
POST OFFICE BOX 412 - CLIFTON, NEW JERSEY

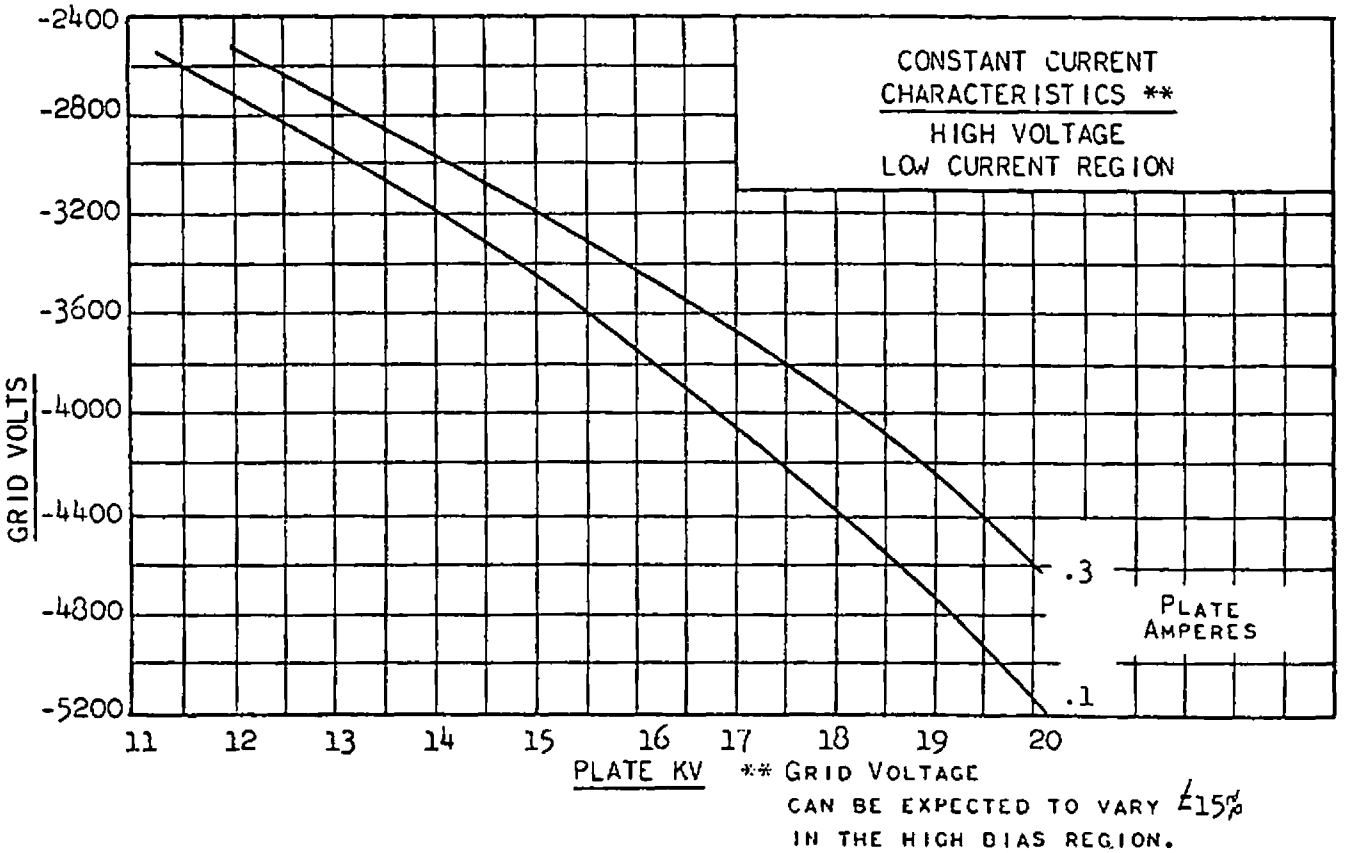

** GRID VOLTAGE CAN BE EXPECTED TO VARY ±15% IN THE HIGH BIAS REGION.

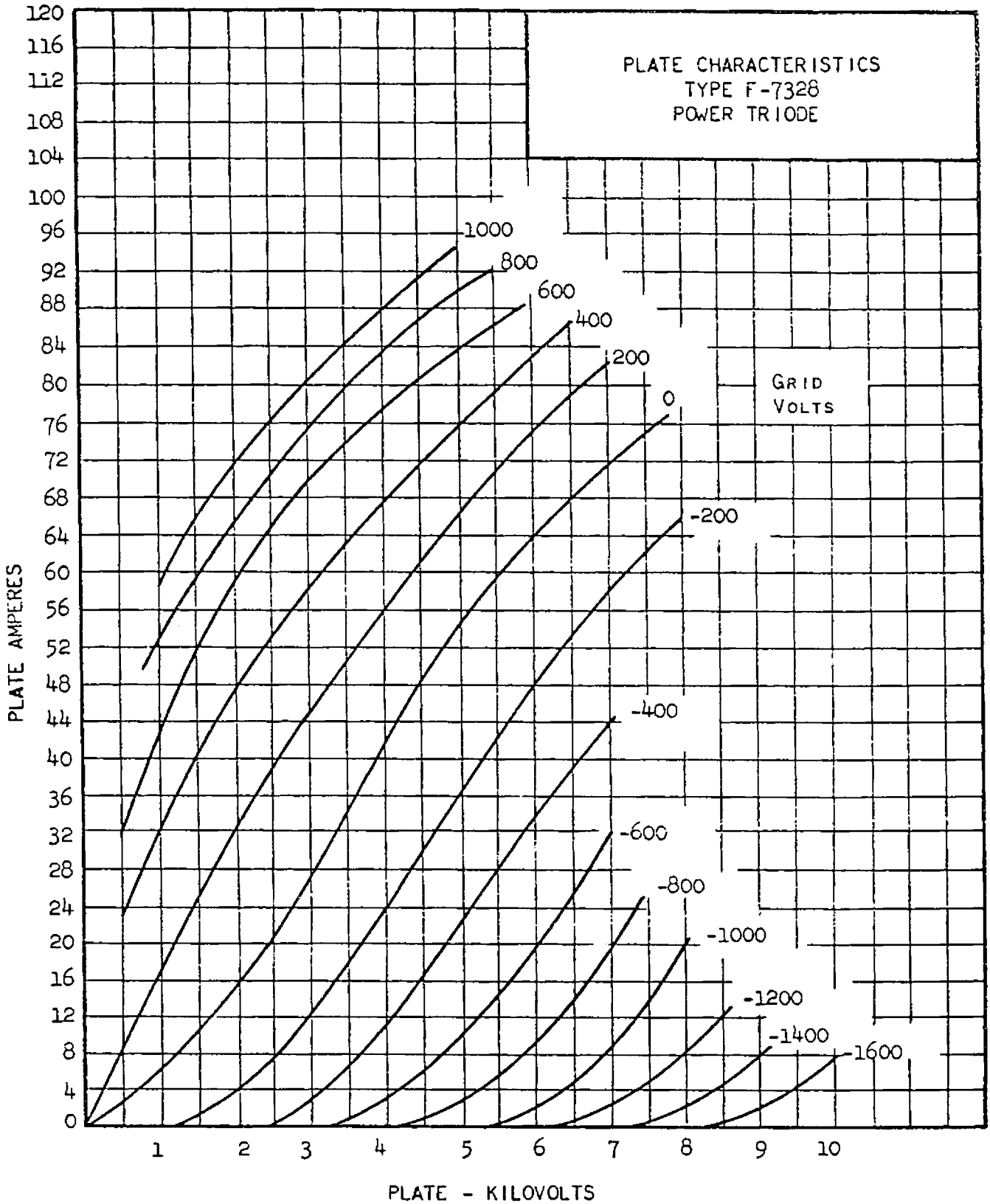
PLATE CHARACTERISTICS
TYPE F-7328
POWER TRIODE
GRID VOLTS
1000
800
600
400
200
0
-200
-400
-600
-800
-1000
-1200
-1400
-1600
PLATE AMPERES
120
116
112
108
104
100
96
92
88
84
80
76
72
68
64
60
56
52
48
44
40
36
32
28
24
20
16
12
8
4
0
1
2
3
4
5
6
7
8
9
10
PLATE - KILOVOLTS

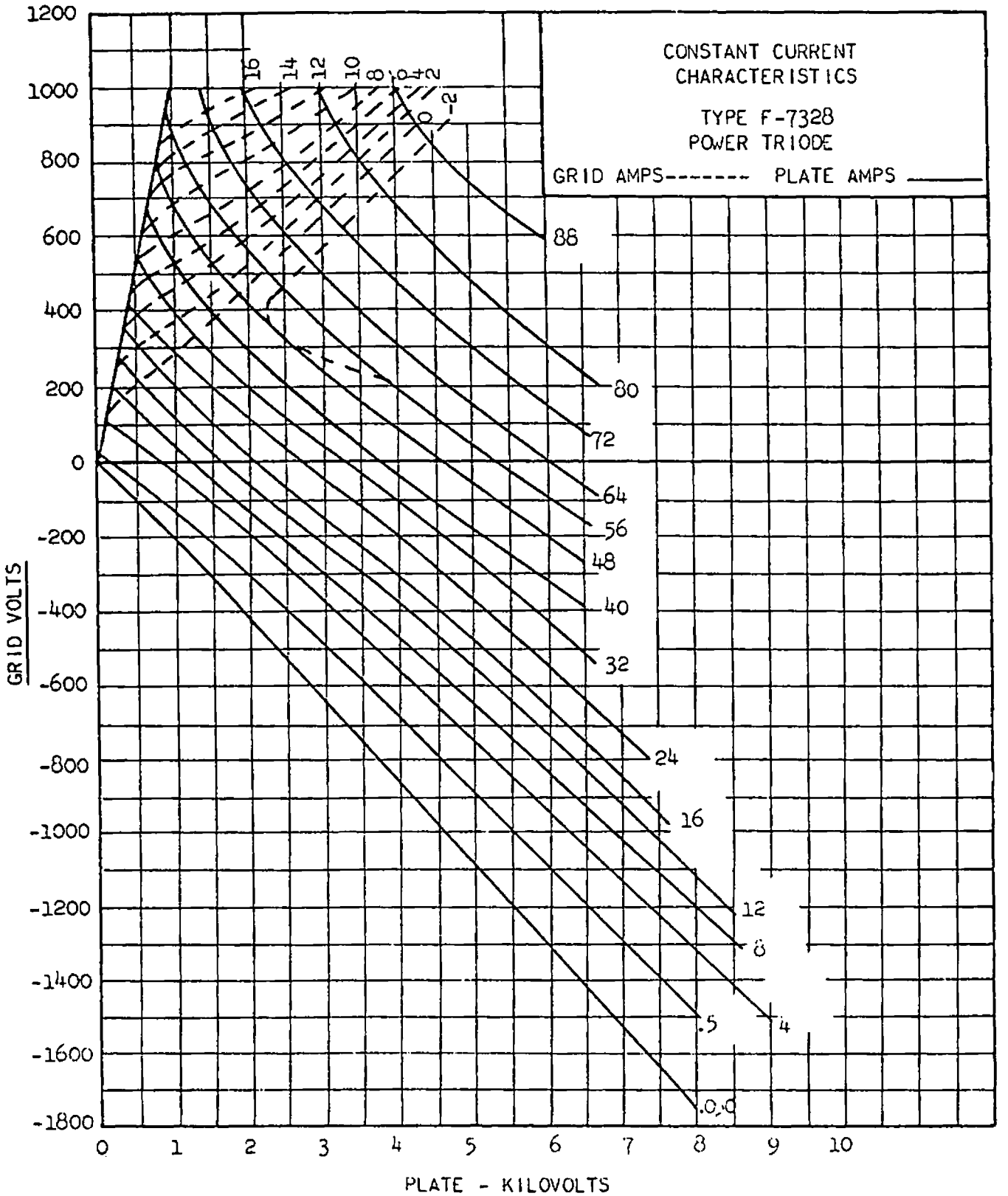
CONSTANT CURRENT
CHARACTERISTICS
TYPE F-7328
POWER TRIODE
GRID AMPS------- PLATE AMPS ——
GRID VOLTS
PLATE - KILOVOLTS
1200
1000
800
600
400
200
0
-200
-400
-600
-800
-1000
-1200
-1400
-1600
-1800
0
1
2
3
4
5
6
7
8
9
10
16
14
12
10
8
6
4
2
0
-2
88
80
72
64
56
48
40
32
24
16
12
8
6
5
4
0.0

TERMINALS

BLACK - GRID
YELLOW - FIL. #1
RED - FIL. #2

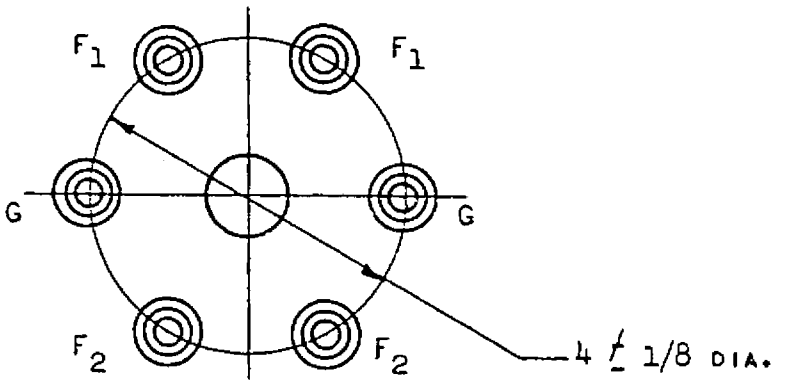

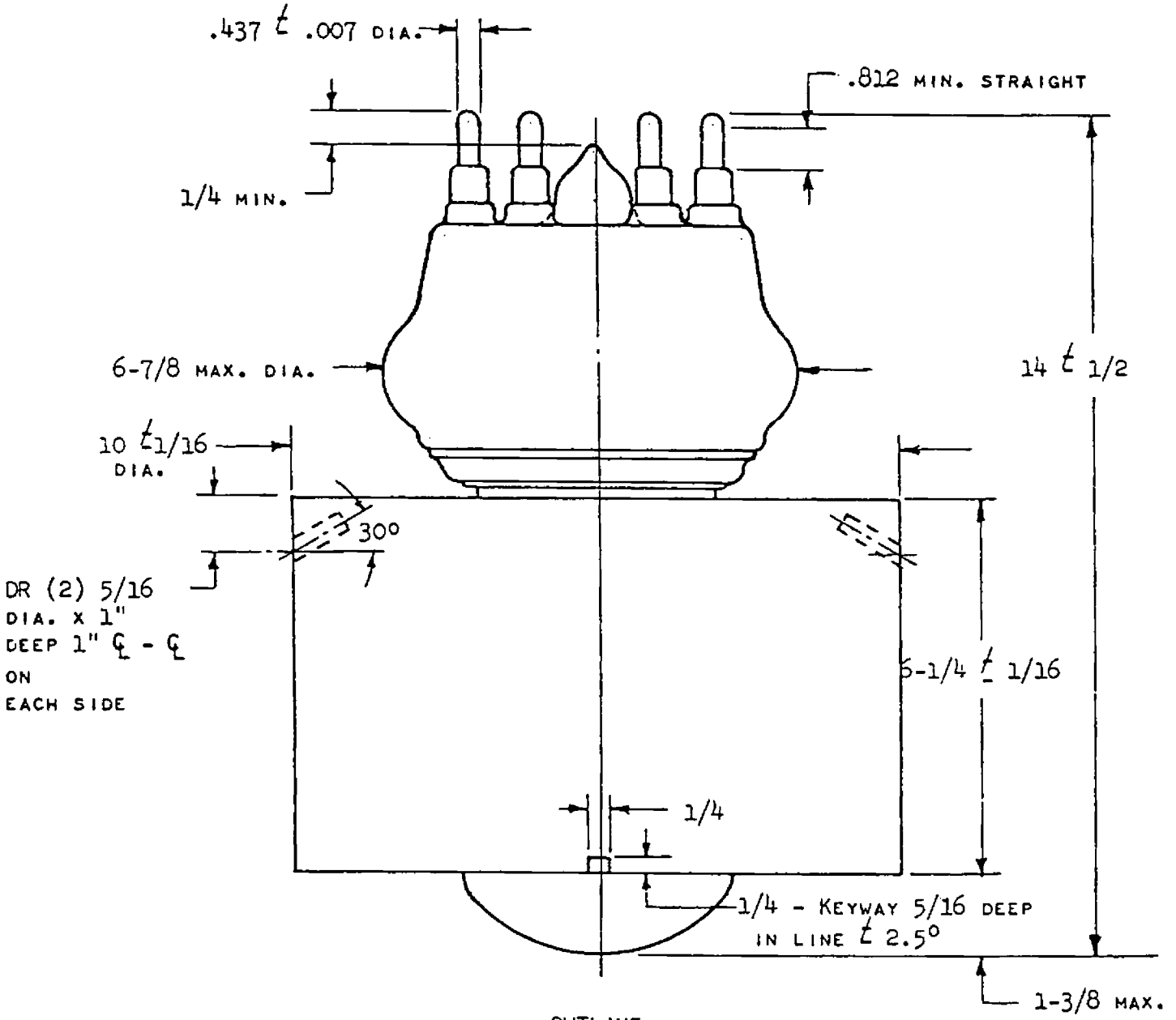

OUTLINE

F-7328 POWER TRIODE

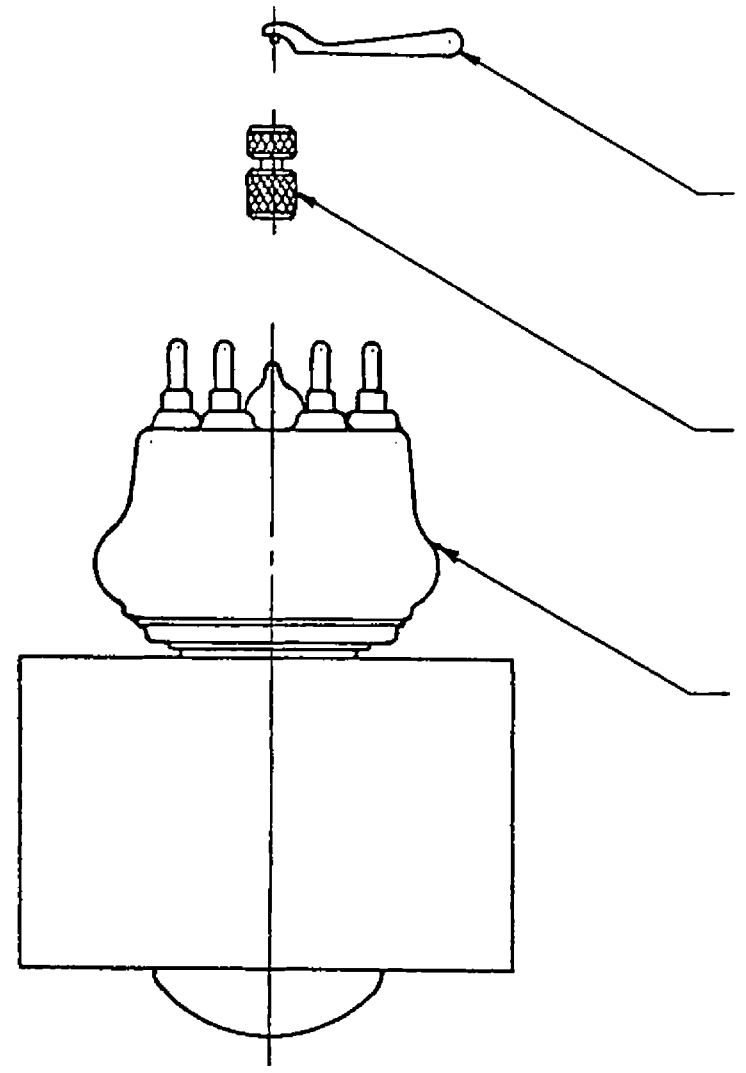

SPANNER WRENCH
RT-52843
2 REQUIRED

TERMINAL CONNECTOR
ASSEM. RT-52578
6 REQUIRED

TUBE TYPE F-7328

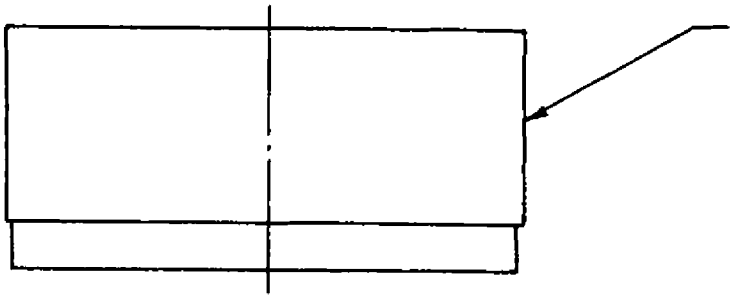

AIR JACKET - TYPE 'A'
RT-54628

ACCESSORIES

from JEDEC release #3734, May 21, 1962

engineering TUBE DATA

F-7423
IATRON*

ITT Components Division

TENTATIVE

DESCRIPTION:

THE F-7423 IS A 5 INCH IATRON (DIRECT VIEW STORAGE CATHODE-RAY TUBE) THAT PRODUCES A BRIGHT VISUAL DISPLAY OF ELECTRICALLY STORED INFORMATION. IT IS ELECTROSTATICALLY FOCUSED AND DEFLECTED. THE TUBE DISPLAYS BRIGHT IMAGES THAT CAN BE VIEWED IN DIRECT DAYLIGHT, AND THE TUBE FEATURES THE ABILITY TO WRITE, STORE AND ERASE SIGNAL INFORMATION AT THE WILL OF THE OPERATOR. GRAY SHADES ARE PRODUCED IN ACCORDANCE WITH THE AMPLITUDE VARIATIONS OF THE INPUT SIGNAL. THE TUBE HAS TWO ELECTRON GUNS, A WRITING GUN WHICH WRITES THE INPUT SIGNAL ON AN INSULATOR STORAGE SCREEN, AND A FLOOD GUN WHICH ILLUMINATES THE PHOSPHOR IN ACCORDANCE WITH THE STORED SIGNAL.

GENERAL:

DIMENSIONS	SEE OUTLINE ATTACHED
NOMINAL TUBE DIAMETER	5 INCHES
MINIMUM USEFUL DISPLAY DIAMETER	4 INCHES
PHOSPHOR	P-20 ALUMINIZED
OPERATING POSITION	ANY
WEIGHT (APPROXIMATE)	2 LB. 8 OZ.
CATHODE PRE-HEATING TIME	30 SECONDS
FOCUS METHOD	ELECTROSTATIC
DEFLECTION METHOD	ELECTROSTATIC

MAXIMUM RATINGS:

	FLOOD SECTION
VIEWING SCREEN	∱10 KV
BACKING ELECTRODE	∱25 V
COLLECTOR	∱250 V
ANODE #4	∱150 V
ANODE #3	∱150 V
ANODE #2	∱150 V
ANODE #1	∱80 V
HEATER-CATHODE VOLTAGE	∱125 V

* TRADEMARK OF INTERNATIONAL TELEPHONE AND TELEGRAPH CORPORATION

ITT ELECTRON TUBE DEPARTMENT
COMPONENTS DIVISION
INTERNATIONAL TELEPHONE AND TELEGRAPH CORPORATION
P.O. BOX 412, CLIFTON, NEW JERSEY

WRITE SECTION

WRITE CATHODE	-1000 V	
GRID #1	NEGATIVE VOLTAGE RESPECT WRITE CATHODE	150 V
	POSITIVE VOLTAGE RESPECT WRITE CATHODE	0 V
GRID #2	∕150 V	
GRID #3	∕500 V	RESPECT WRITE CATHODE
HEATER-CATHODE VOLTAGE	∕125 V	
GRID #2 TO ANY DEFLECTING ELECTRODE	∕500 V	

TYPICAL OPERATING VALUES:

FLOOD SECTION

VIEWING SCREEN	∕8.5	KV DC	2 MA (MAX.)
BACKING ELECTRODE	∕10	VDC	
COLLECTOR	∕180	VDC	2 MA (MAX.)
ANODE #4	∕90	VDC	1.5 MA (MAX.)
ANODE #3	∕20	VDC	1.5 MA (MAX.)
ANODE #2	∕30	VDC	1.8 MA (MAX.)
ANODE #1	∕60	VDC	5.0 MA (MAX.)
FLOOD CATHODE	0	VDC	10.0 MA (MAX.)
HEATER	6.3	V AC OR DC	1.4 A

WRITE SECTION

WRITE CATHODE	-750	VDC	3.0 MA (MAX.)
GRID #1 CUTOFF (NOTE 1)	-60	VDC	RESPECT WRITE CATHODE
GRID #2	0	VDC	
GRID #3	∕165	VDC	RESPECT WRITE CATHODE
HEATER	6.3	V AC OR DC	.6 A
MEAN DEFLECTION PLATE VOLTAGE	0	V	

RANGE OF TYPICAL OPERATING ADJUSTMENTS:

ANODE #2	25 TO 35	VDC	ADJUST FOR BEST COLLIMATION
ANODE #3	15 TO 30	VDC	ADJUST FOR BEST COLLIMATION
GRID #1 CUTOFF (NOTE 1)	-40 TO -85	VDC	
GRID #3 FOCUS	105 TO 210	VDC	ADJUST FOR BEST FOCUS
ERASE PULSES	0 TO 10		VOLT AMPLITUDE, 1 USECOND WIDE, 100-5000 PRF - ADJUST FOR DESIRED VIEWING TIME.

* TRADEMARK OF ITT

TYPICAL PERFORMANCE:

Resolution (Note 2)		
50% of Full Brightness	40	Lines/Inch
Brightness	4,000	ft. Lamberts
Writing Speed		
20 Volt Drive to 50% Brightness	20,000	Inches/Second
40 Volt Drive to 50% Brightness	40,000	Inches/Second
Erase Time (Note 3)	12	Milliseconds
Viewing Time (Note 4)	10	Seconds
Storage Time (Note 5)	20	Seconds
Deflection Factor		
D1-D2	40-49	Volts/Inch
D3-D4	38-47	Volts/Inch
Half-tone Steps	4	(Minimum)

ENVIRONMENTAL DATA:

Ambient Temperature Range		
Operating	-55° to +71°	C
Non-operating	-65° to +100°	C
Altitude	70,000	Feet
Vibration (Continuous)	3G, 5	Cps to 500 Cps
Shock (3 axes)		
Operating	15G for 40	MS, 18 impacts
Operating	25G for 5	MS, 6000 impacts
Non-operating (Crash Safety)	30G for 11	MS, 2 impacts

NOTES:

1. Visual cutoff of the stored, focused, undeflected spot.

2. Resolution is measured by the shrinking raster method at the center of the tube

3. Erase time is the shortest time in which a signal can be removed from the tube after being stored at full brightness.

4. Viewing time is the minimum time that a signal stored at full brightness anywhere in the display areas can be viewed with erase pulses continuously applied to counteract ion writing.

* Trademark of ITT

5. STORAGE TIME IS THE TIME REQUIRED FOR THE BRIGHTNESS TO INCREASE FROM CUTOFF TO 50 PER CENT OF FULL VALUE IN THE ABSENCE OF ERASE PULSES.

SPECIAL PRECAUTIONS:

OBSERVE MAXIMUM RATINGS TO AVOID POSSIBLE DAMAGE TO THE TUBE. IN PARTICULAR THE VIEWING SCREEN VOLTAGE SHOULD BE LIMITED SO AS TO NEVER EXCEED 10 KV. THE FULL VOLTAGE SHOULD NOT BE APPLIED TO THE VIEWING SCREEN INSTANTANEOUSLY. AN ORDINARY RC FILTER AT THE OUTPUT OF THE POWER SUPPLY WILL PROVIDE ADEQUATE ASSURANCE THAT THE VOLTAGE BUILD UP WILL NOT BE TOO ABRUPT. THE MINIMUM RESISTANCE OF THE HIGH VOLTAGE CIRCUIT SHOULD BE 1 MEG OHM.

REPEATED BOMBARDMENT WITH A HIGH CURRENT FOCUSED WRITING BEAM ON A SMALL AREA OF THE STORAGE SURFACE CAN BURN A DARK IMAGE INTO THE DISPLAY AREA, WHICH MAY REMAIN FOR SEVERAL HOURS OR EVEN PERMANENTLY. THEREFORE, DEFLECTION VOLTAGES SHOULD BE APPLIED BEFORE OPERATING THE WRITING BEAM.

ADDITIONAL INFORMATION FOR SPECIFIC APPLICATIONS CAN BE OBTAINED FROM THE

ELECTRON TUBE APPLICATIONS SECTION
ITT COMPONENTS DIVISION
POST OFFICE BOX 412
CLIFTON, NEW JERSEY

* TRADEMARK OF THE INTERNATIONAL TELEPHONE & TELEGRAPH CORPORATION

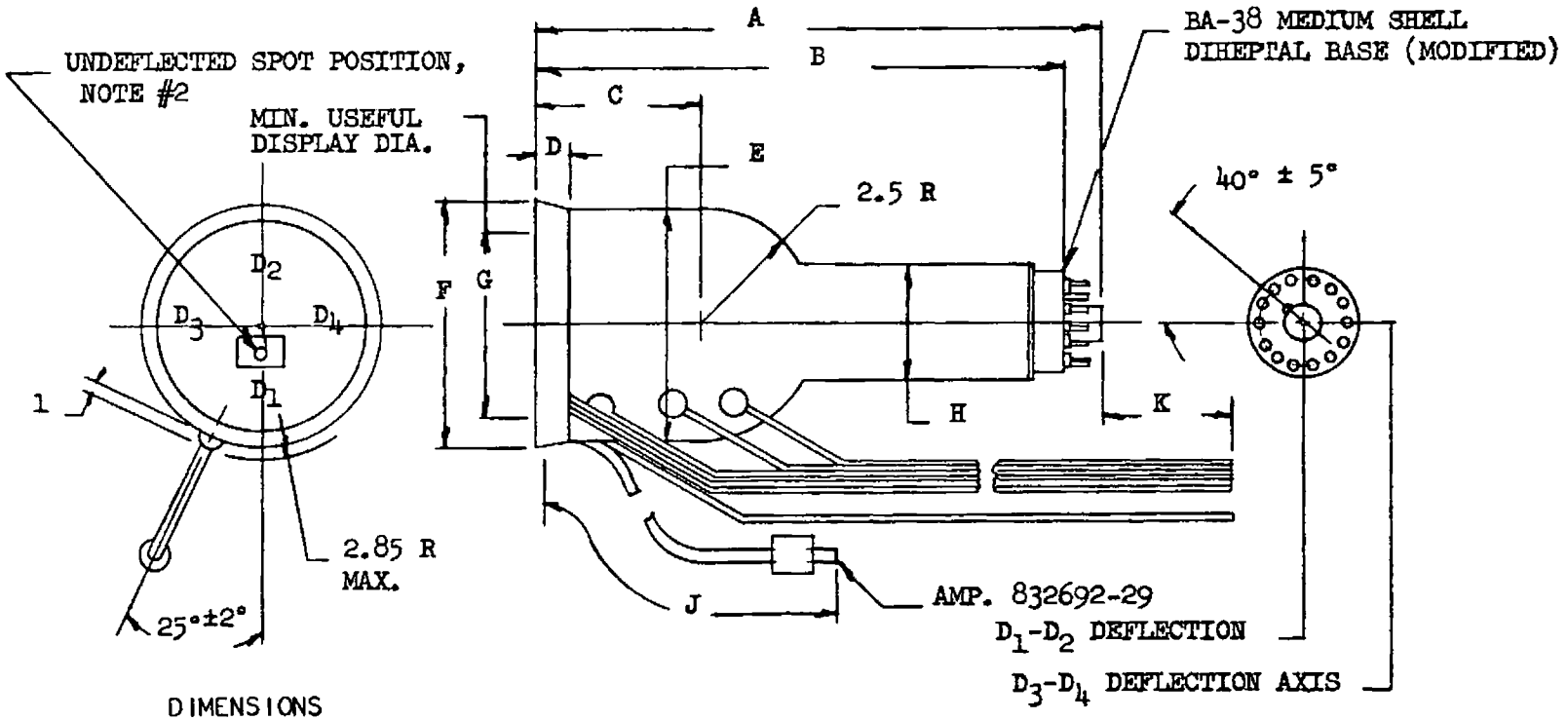

REF.	DIMENSIONS MIN.	MAX.
A		12 1/16
B	11 1/8	11 1/4
C	3.73	3.83
D	.69	.81
E		5.12
F		5.37
G	4.0	
H	2.44	2.56
I	.24	.26
J		8.25
K	4.5	

NOTE 1: DEFLECTING ELECTRODES D_1, D_2 ARE NEARER THE SCREEN; DEFLECTING ELECTRODES D_3, D_4 ARE NEARER THE BASE WITH D_1 POSITIVE WITH RESPECT TO D_2. THE SPOT WILL BE DEFLECTED TOWARD PINS NO. 9 AND 10; LIKEWISE WITH D_3 POSITIVE WITH RESPECT TO D_4. THE SPOT WILL BE DEFLECTED TOWARD PIN NO. 6.

NOTE 2: THE SPOT SHALL FALL WITHIN A CIRCLE OF 0.2 INCH RADIUS CENTERED 0.6 INCHES ABOVE THE CENTER OF THE TUBE FACE.

F-7423 IATRON OUTLINE

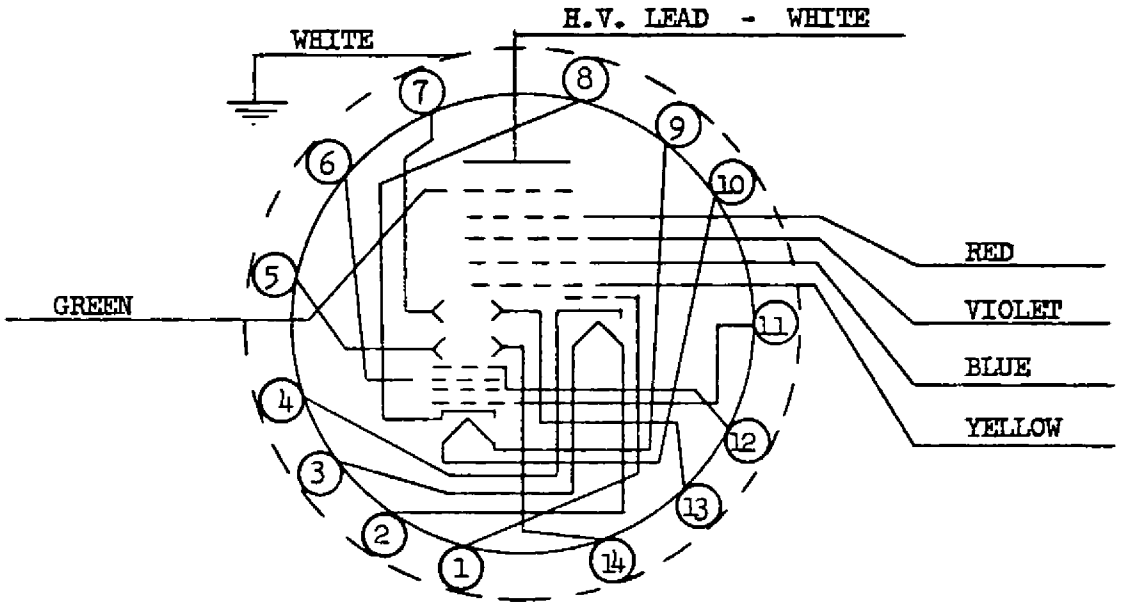

14 PIN BASE

1	ANODE #1
2	FLOOD HEATER
3	FLOOD HEATER
4	FLOOD CATHODE
5	D-3
6	GRID #3 (FOCUS)
7	D-1
8	WRITE CATHODE
9	WRITE HEATER
10	WRITE HEATER
11	GRID #1
12	GRID #2
13	D-2
14	D-4

FLYING LEADS

WHITE	SMALL DIAMETER	ELECTROSTATIC SHIELD
WHITE	LARGE DIAMETER	VIEWING SCREEN
YELLOW	ANODE #2	
BLUE	ANODE #3	
VIOLET	ANODE #4	
RED	COLLECTOR	
GREEN	BACKING ELECTRODE	

F-7423 IATRON

from JEDEC release #3156A, Feb. 26, 1962

engineering TUBE DATA

ITT Components Division

F-7656 ⇦
High Vacuum
Power Diode

DESCRIPTION

The F-7656 is a high vacuum diode designed for rectifier service or in special applications in shunting or charging circuits wherever high peak inverse voltages, extreme environmental conditions or high operating frequencies and transients are present. The exceptionally rugged construction, free of internal insulators, spring tensioning devices and fragile elements, make this type adaptable to a wide range of uses. The anode is forced air cooled and is capable of dissipating 3.0 kilowatts. The exceptionally high thermal inertia of the heavy wall anode protects against tube damage during momentary overload conditions. The cathode is a thoriated tungsten bifilar helix.

ELECTRICAL

Filament Voltage	11	volts
Filament Current	28	amperes
Full rated filament voltage may be safely applied to the cold filament		
Inter-electrode Capacitance	8.5	μμf

Maximum Ratings:	Shunt	Charging	Rectifier	
Maximum Peak Inverse Voltage	40	40	40	kilovolts
Maximum Peak Plate Current *	100	4.0 rms	7.5	amperes
Maximum Average Plate Current	--	--	2.5	amperes

MECHANICAL

Mounting Position				Vertical, anode up or down	
Type of Cooling				Forced air	
Anode Air Flow Required					
Plate Dissipation	3.0	2.4	1.8	1.0	kilowatts
Air Flow	190	125	75	50	cfm
Pressure	1.21	.58	.26	.2	inches of water
Maximum Incoming Air Temperature				45	°C
Maximum Glass & Seal Temperature **				180	°C
Net Weight, approximate				6-1/4	pounds

* Maximum peak plate current of 100 amperes is rated under conditions of filament excitation voltage of 11.9 volts.

**A temperature sensitive lacquer manufactured by the Tempil Corporation, 132 West 22nd Street, New York 11, New York, is convenient for this measurement.

⇦ This data sheet supersedes data of 11-60 in its entirety

1-62

ITT ELECTRON TUBE DEPARTMENT
COMPONENTS DIVISION
INTERNATIONAL TELEPHONE AND TELEGRAPH CORPORATION
P. O. BOX 412, CLIFTON, NEW JERSEY

Additional information for specific applications can be obtained from:

Electron Tube Applications Section
ITT Components Division
P.O. Box 412
Clifton, New Jersey

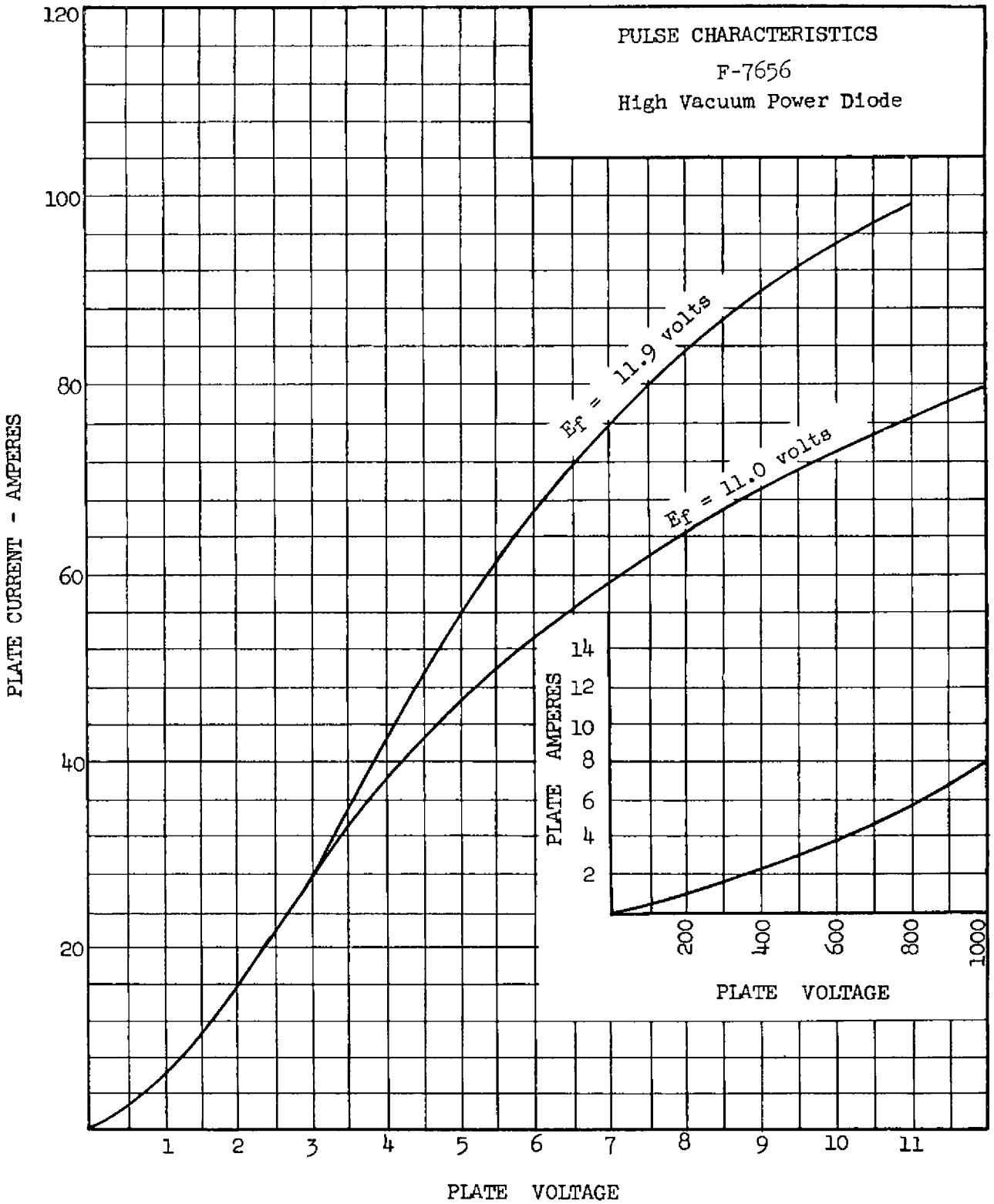
PULSE CHARACTERISTICS
F-7656
High Vacuum Power Diode
PLATE CURRENT - AMPERES
120
100
80
60
40
20
Ef = 11.9 volts
Ef = 11.0 volts
PLATE AMPERES
14
12
10
8
6
4
2
200
400
600
800
1000
PLATE VOLTAGE
1
2
3
4
5
6
7
8
9
10
11
PLATE VOLTAGE

Terminal Color Code

Fil. Term. - Yellow
Fil. Cent. Tap - Red

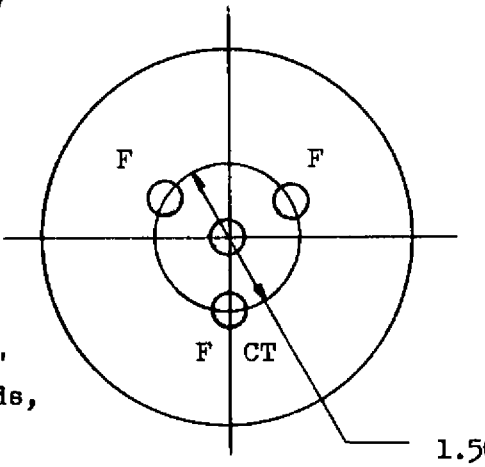

This tube type is available on request with 1/2" wide flexible copper leads, 6" long.

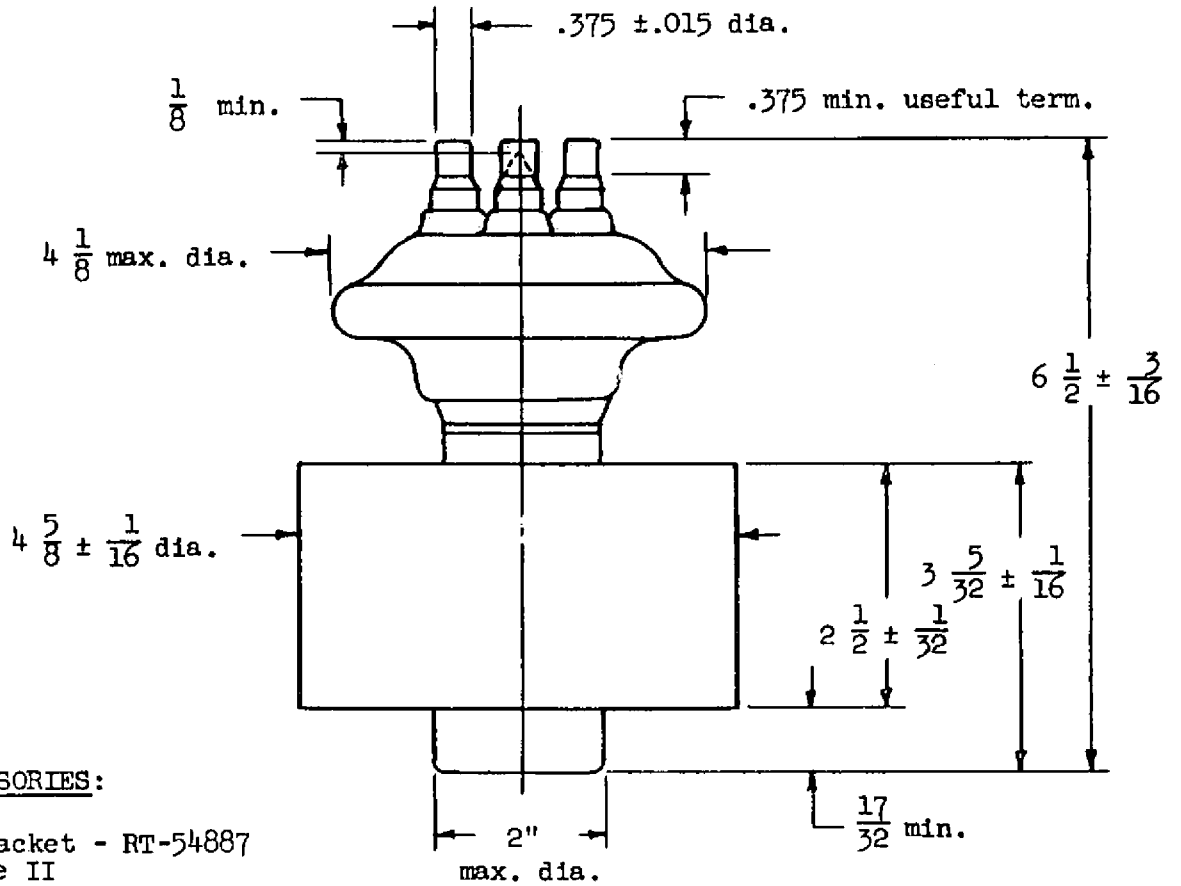

ACCESSORIES:

Air Jacket - RT-54887
Size II

OUTLINE

F-7656
High Vacuum Power Diode

engineering TUBE DATA

F-7820
POWER TRIODE

ITT Components Division

DESCRIPTION:

THE F-7820 IS A THREE ELECTRODE TUBE DESIGNED FOR USE AS A MODULATOR, ITS ELECTRICAL CHARACTERISTICS MAKING IT PARTICULARLY SUITABLE FOR CLASS AB MODULATOR CIRCUITS. THIS TUBE IS EXCEPTIONALLY DESIRABLE UNDER CONDITIONS OF OPERATION WHERE VIBRATION* OR SHOCK* ARE PRESENT. THE ANODE IS AIR-COOLED AND CAPABLE OF 4.3 KILOWATTS DISSIPATION. THE CATHODE IS A THORIATED TUNGSTEN FILAMENT. MAXIMUM RATINGS APPLY FOR AUDIO FREQUENCY USE ONLY.

ELECTRICAL:

FILAMENT VOLTAGE	7.0	VOLTS
FILAMENT CURRENT	110	AMPERES
AMPLIFICATION FACTOR		
Ec = -200 v. Ib = 1.0 AMPS.	6	
DIRECT INTER-ELECTRODE CAPACITANCE		
GRID PLATE	42	UUF
GRID FILAMENT	43	UUF
PLATE FILAMENT	12	UUF

MECHANICAL:

MOUNTING POSITION			VERTICAL, ANODE DOWN	
TYPE OF COOLING			FORCED AIR	
MAXIMUM INCOMING AIR TEMPERATURE			45	°C
REQUIRED AIR FLOW ON ANODE				
PLATE DISSIPATION - KW	4.3	3.75	2.75	
AIR FLOW - CFM	200	160	100	
PRESSURE - INCHES OF WATER	4.8	3.2	1.6	
MAXIMUM GLASS & SEAL TEMPERATURE**			180	°C
MAXIMUM RADIATOR TEMPERATURE (MEASURED ON THE CORE AT THE END AWAY FROM INCOMING AIR)**			200	°C
WEIGHT, APPROXIMATE			16	LBS.

* FOR SPECIFIC INFORMATION, PLEASE WRITE TO THE ELECTRON TUBE ENGINEERING DEPARTMENT.

** A TEMPERATURE SENSITIVE LACQUER MANUFACTURED BY THE TEMPIL CORPORATION, 132 WEST 22ND STREET, NEW YORK 11, NEW YORK IS CONVENIENT FOR THIS MEASUREMENT.

from JEDEC release #3064, Dec. 12, 1960

ITT ELECTRON TUBE DEPARTMENT
COMPONENTS DIVISION
INTERNATIONAL TELEPHONE AND TELEGRAPH CORPORATION
P.O. BOX 412, CLIFTON, NEW JERSEY

MAXIMUM RATINGS AND TYPICAL OPERATING CONDITIONS:

AUDIO-FREQUENCY POWER AMPLIFIER AND MODULATOR - CLASS AB_1

MAXIMUM RATINGS, ABSOLUTE VALUES

D-C PLATE VOLTAGE	8	KV
MAXIMUM SIGNAL D-C PLATE CURRENT***	5	AMPERES
PLATE DISSIPATION***	4.3	KW

TYPICAL OPERATION
(UNLESS OTHERWISE SPECIFIED, VALUES ARE FOR TWO TUBES)

D-C PLATE VOLTAGE	3750	5000	7000	VOLTS
D-C GRID VOLTAGE	-650	-900	-1400	VOLTS
PEAK A-F GRID-TO-GRID VOLTAGE	1260	1760	2700	VOLTS
ZERO SIGNAL D-C PLATE CURRENT	0.6	0.8	0.5	AMPERES
MAXIMUM SIGNAL D-C PLATE CURRENT	2.8	2.6	2.55	AMPERES
EFFECTIVE LOAD RESISTANCE PLATE-TO-PLATE	2250	3700	5500	OHMS
MAXIMUM SIGNAL DRIVING POWER	0	0	0	WATTS
MAXIMUM SIGNAL POWER OUT	5.4	7.4	11.0	KW

*** AVERAGED OVER ANY AUDIO FREQUENCY CYCLE OF SINE WAVE FORM.

ADDITIONAL INFORMATION FOR SPECIFIC APPLICATIONS CAN BE OBTAINED FROM THE:

ELECTRON TUBE APPLICATIONS SECTION
ITT COMPONENTS DIVISION
POST OFFICE BOX 412
CLIFTON, NEW JERSEY

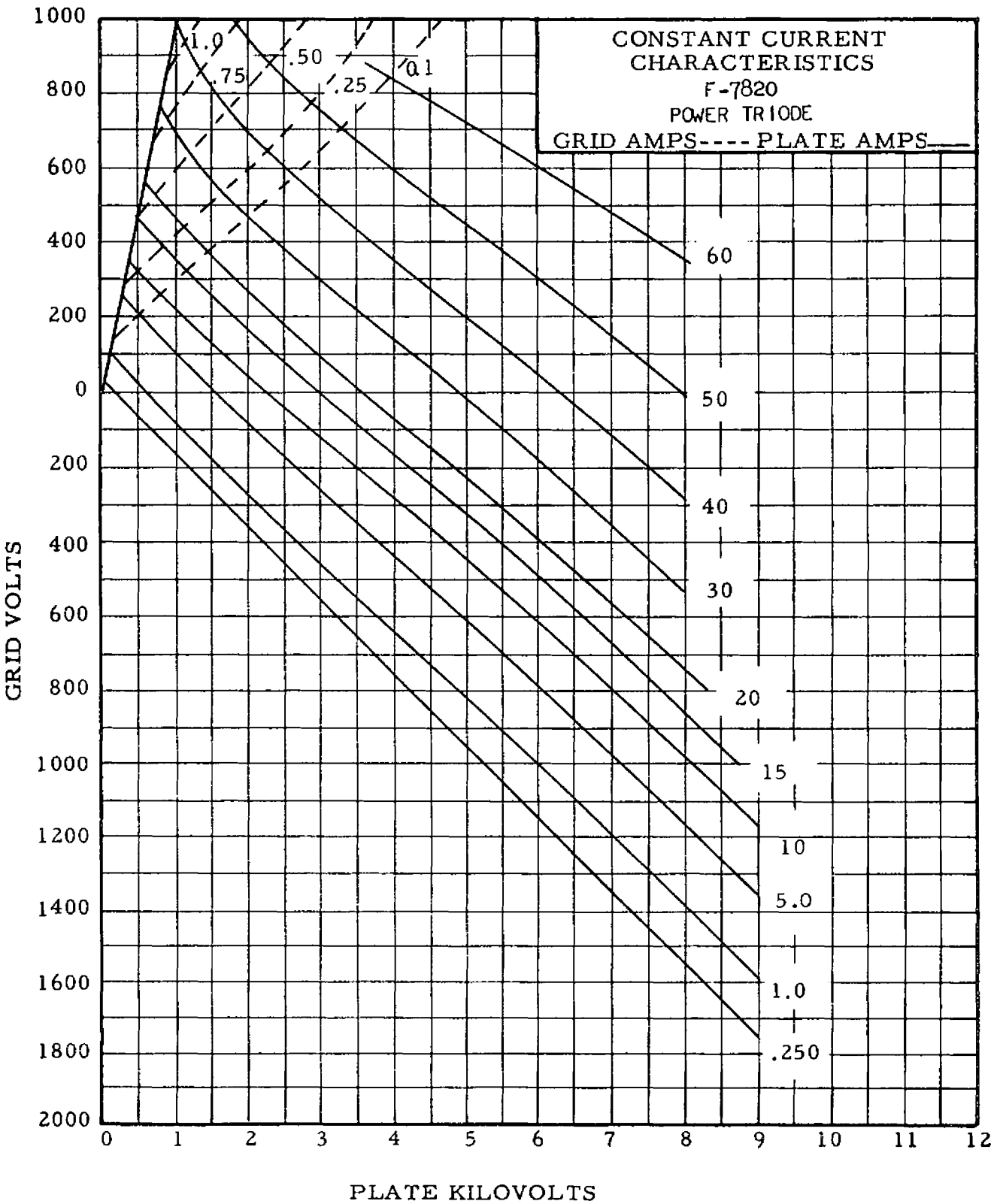
CONSTANT CURRENT
CHARACTERISTICS
F-7820
POWER TRIODE
GRID AMPS---- PLATE AMPS___
1.0
.75
.50
.25
.1
60
50
40
30
20
15
10
5.0
1.0
.250
GRID VOLTS
1000
800
600
400
200
0
200
400
600
800
1000
1200
1400
1600
1800
2000
0
1
2
3
4
5
6
7
8
9
10
11
12
PLATE KILOVOLTS

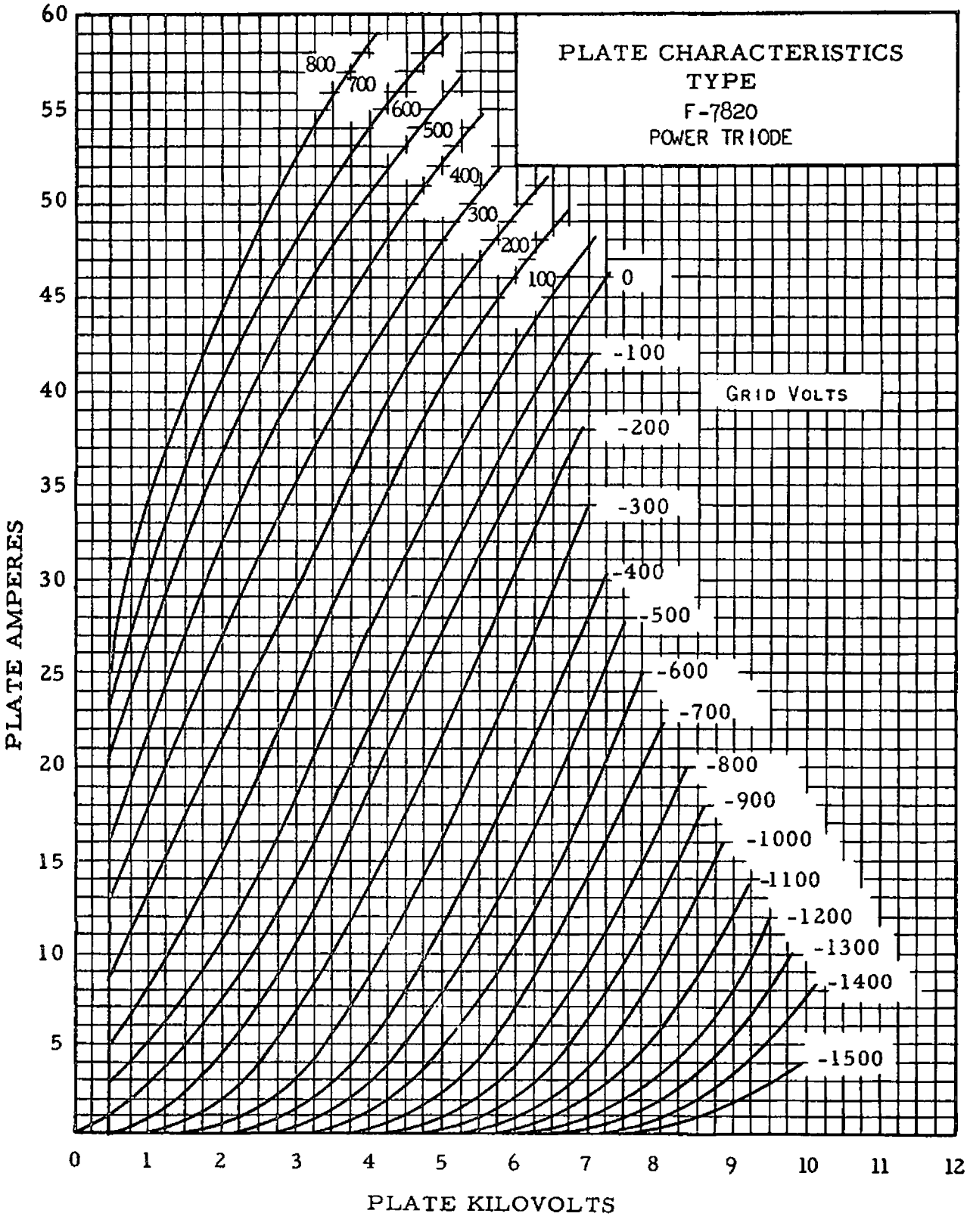
PLATE CHARACTERISTICS
TYPE
F-7820
POWER TRIODE
GRID VOLTS
800
700
600
500
400
300
200
100
0
-100
-200
-300
-400
-500
-600
-700
-800
-900
-1000
-1100
-1200
-1300
-1400
-1500
PLATE AMPERES
60
55
50
45
40
35
30
25
20
15
10
5
0
1
2
3
4
5
6
7
8
9
10
11
12
PLATE KILOVOLTS

Spanner Wrench
RT-52843-1 - 2 required

Terminal Connector Assy.
RT-53978-1

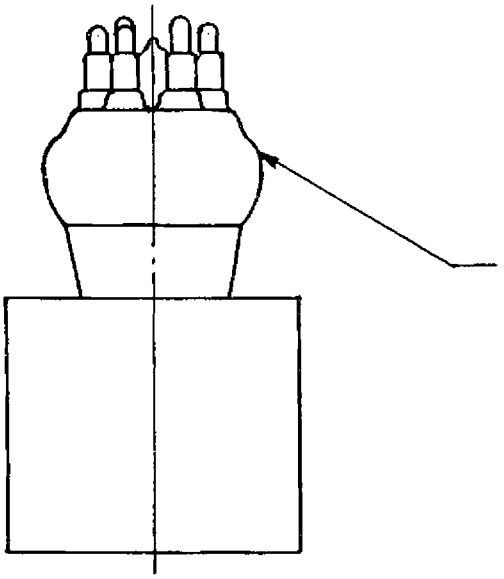

Tube Types
F-8C25
F-7820

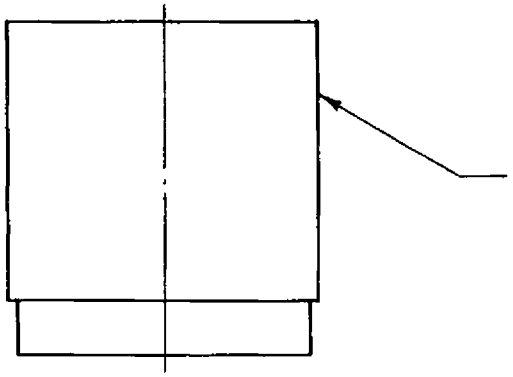

Air Jacket
RT-54632-1

Size I F-8C25
Size II F-7820

ACCESSORIES

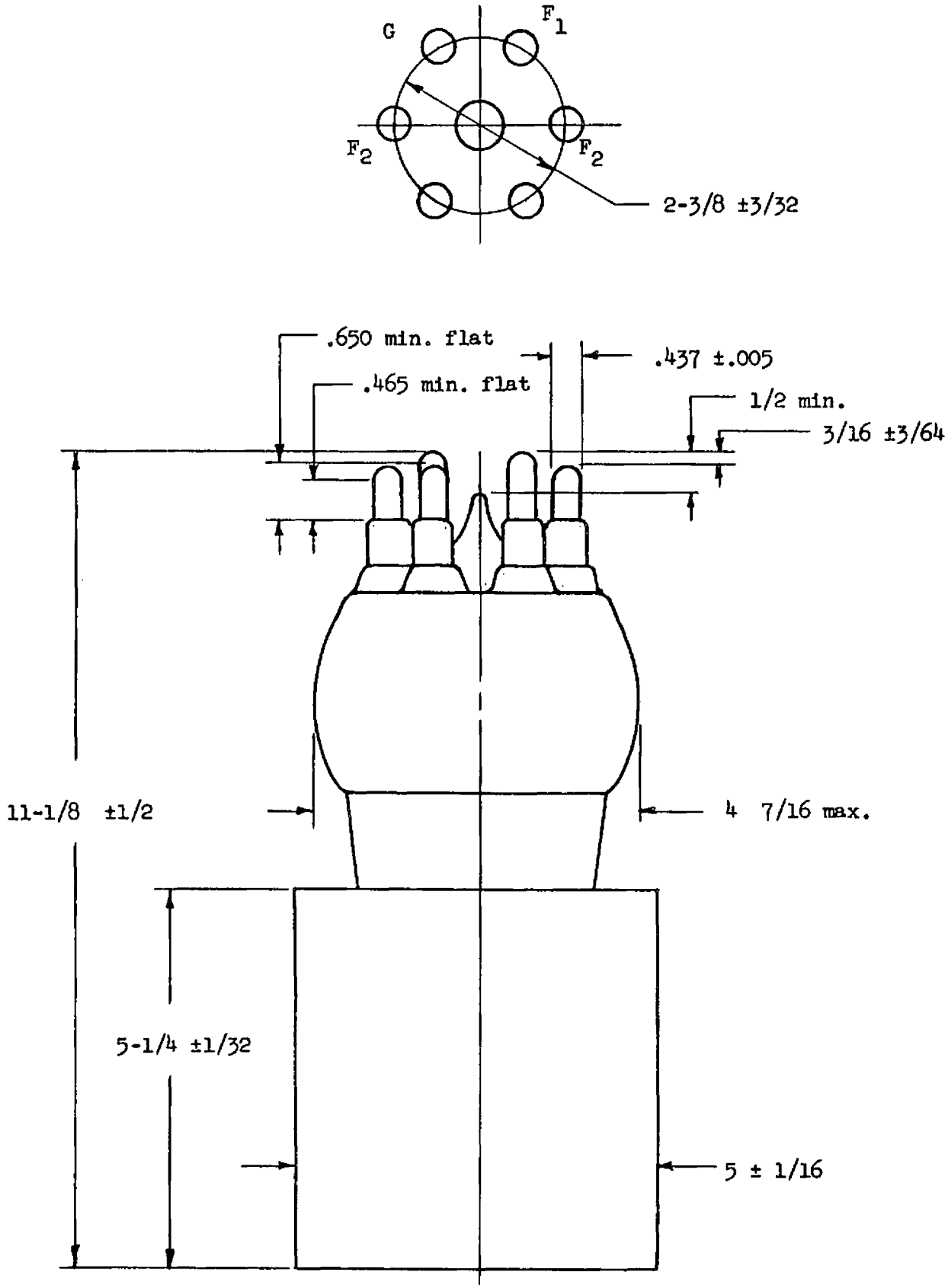

O U T L I N E F-7820 POWER TRIODE

ITT Electron Tube Division
BOX 104 CLIFTON, NEW JERSEY
INTERNATIONAL TELEPHONE AND TELEGRAPH CORPORATION

DESCRIPTION:

The F-7832 is a general purpose metal and ceramic triode for use as a Class C amplifier or oscillator under CW or pulsed conditions. It is also capable of delivering 2 megawatts of power in a hard tube modulator. The anode is capable of dissipating 30 kilowatts during Continuous Commercial Service. Cooling is accomplished by evaporation of water on the anode and forced air on the ceramic and coaxial seals. The cathode is of mesh construction and may be operated on d-c or single phase a-c.

ELECTRICAL:

Filament Voltage	7.5	volts
Filament Current	210	amperes
Filament Starting Current		
Full rated filament voltage may be safely applied to the cold filament		
Filament Heating Time, minimum	15	seconds
Ampflication Factor		
E_c = 150 v. I_b = 4.0 amps	18	
Direct Inter-electrode Capacitances		
Grid Plate	40	μμf
Grid Filament	40	μμf
Plate Filament	3.0	μμf

MECHANICAL:

Mounting Position	Vertical	
Type of Cooling	Water and Forced Air	
Evaporative Cooling (note 1)		
Plate Dissipation (note 2)	30	kw
Evaporation Rate		
at water supply of 20°C, approx.	.2	gpm
at water supply of 90°C, approx.	.22	gpm
Volume of Vapor		
at water supply of 20°C, approx.	45	$ft.^3/min.$
at water supply of 90°C, approx.	50	$ft.^3/min.$
Air Flow Required - Sufficient air must be provided to keep the ceramic stem surfaces below 200°C.		
Net Weight, approx.	20	lbs.

Note 1: Further details on evaporative cooling available on request.

Note 2: If the boiler is equipped with internal water cooled coils, 30 kw CW may be dissipated under conditions of water flow of 1-1/2 gpm approximately.

MAXIMUM RATINGS AND TYPICAL OPERATING CONDITIONS:

Radio-Frequency Power Amplifier and Oscillator - Class C Telegraphy *
(Key down conditions per tube without Amplitude Modulation) **

Maximum CCS Ratings, Absolute Values

D-C Plate Voltage	10,000	volts max.
D-C Grid Voltage	-1,500	volts max.
D-C Plate Current	8	amperes max.
D-C Grid Current ***	.6	amperes max.
Plate Input	60	kilowatts max.
Plate Dissipation	30	kilowatts max.

Typical Operation

D-C Plate Voltage	9,500	7,500	6,000	volts
D-C Grid Voltage	-1,300	-1,200	-1,000	volts
Peak R-F Grid Voltage	1,850	1,700	1,500	volts
D-C Plate Current	5.5	5.2	5.5	amperes
D-C Grid Current, approx.	.530	.53	.53	amperes
Driving Power, approx.	1,000	900	800	watts
Grid Dissipation, approx.	300	275	275	watts
Power Output, approx.	35	28	22	kilowatts

* The filament voltage may be reduced to an absolute minimum at 6.8 volts under conditions of 3.5 amperes maximum plate current.

** Modulation essentially negative may be used if the positive peak of the envelope does not exceed 115 per cent of the carrier conditions.

*** The power dissipated by the grid must never exceed 600 watts. Grid dissipation approximates the product of peak positive grid voltage and d-c grid current. Peak positive grid voltage may be measured by means of a suitable peak voltmeter connected between grid and filament, or determined by calculations using the constant current characteristics of the tube.

RATINGS VERSUS FREQUENCY:

Maximum ratings apply up to 50 megacycles. The tube may be operated at higher frequencies provided the maximum values of plate voltage and power input are reduced according to the tabulation below (other maximum ratings are the same as shown above). Special attention should be given to adequate ventilation of the ceramics and seals at these frequencies.

Frequency	50	70	110	megacycles
Percentage of Maximum Rated Plate Voltage and Plate Input	100	80	50	per cent

PULSE SERVICE OPERATIONS:

In pulse R-F amplifier service, it is possible to operate the tube under conditions not permissible in CW operation. Because of the wide variety of operating conditions, it is advisable that tube operation recommendations be obtained from our Engineering Department for specific conditions.

MODULATOR TUBE - PULSED OPERATION:

Maximum Ratings, Absolute Values		
D-C Plate Voltage	18	kilovolts
Peak Plate Voltage (instantaneous)	20	kilovolts
D-C Grid Voltage	-2500	volts
Peak Positive Grid Voltage	4000	volts
Pulse Cathode Current	220	amperes
Grid Dissipation	600	watts
Pulse Length	2000	μ seconds
Typical Operation		
D-C Plate Voltage	16	kilovolts
Pulse Plate Current	120	amperes
D-C Grid Voltage	-1500	volts
Pulse Grid Current	40	amperes
Pulse Positive Grid Voltage	2200	volts
Duty Factor	.003	
Pulse Length	10	μ seconds
Plate Output Voltage	13.5	kilovolts
Pulse Output Power	1.6	mw

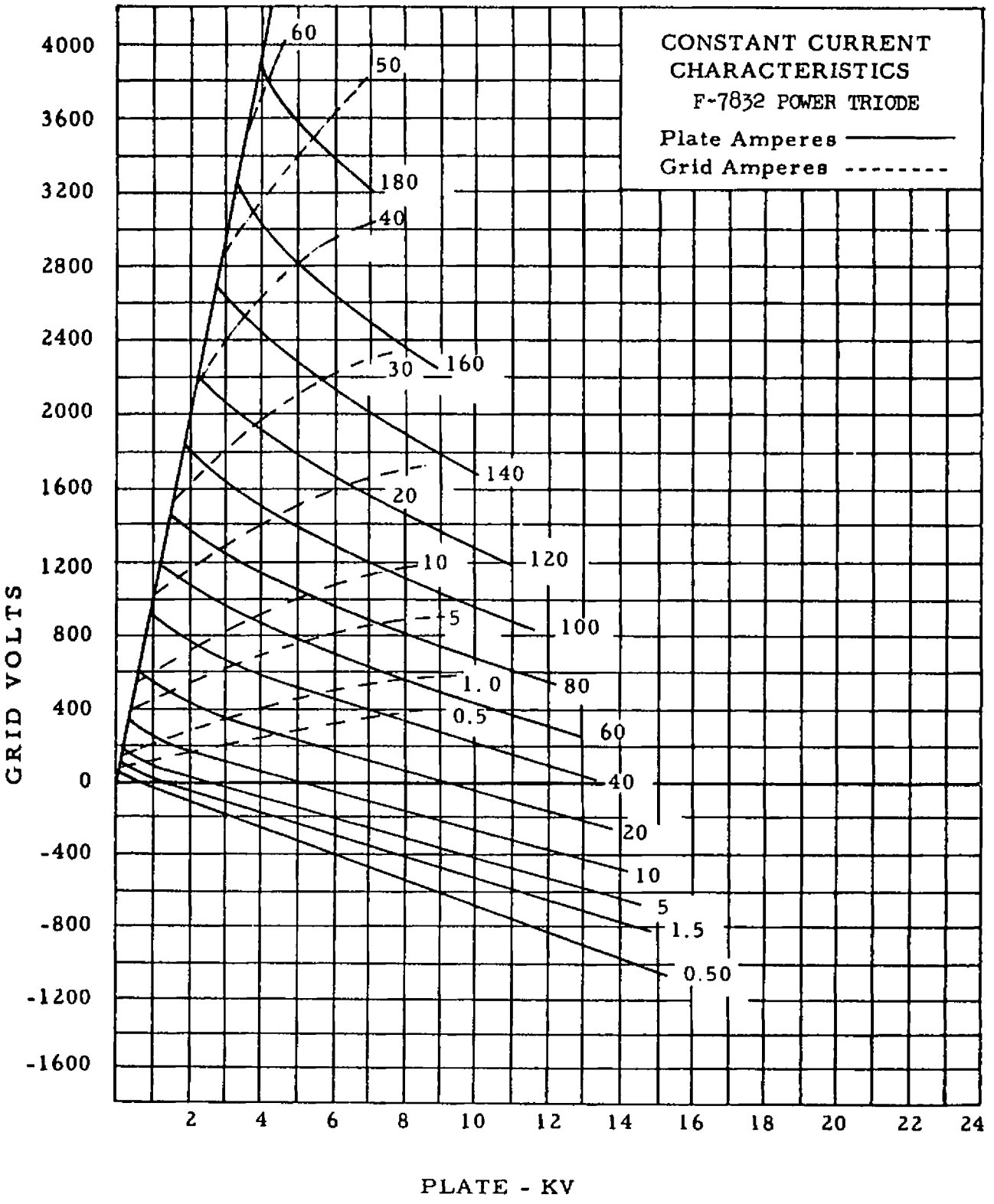
CONSTANT CURRENT CHARACTERISTICS
F-7832 POWER TRIODE
Plate Amperes
Grid Amperes
GRID VOLTS
4000
3600
3200
2800
2400
2000
1600
1200
800
400
0
-400
-800
-1200
-1600
2
4
6
8
10
12
14
16
18
20
22
24
PLATE - KV
60
50
180
40
160
30
140
20
120
10
100
5
80
1.0
60
0.5
40
20
10
5
1.5
0.50

F-7832
POWER
TRIODE

All dimensions
in inches

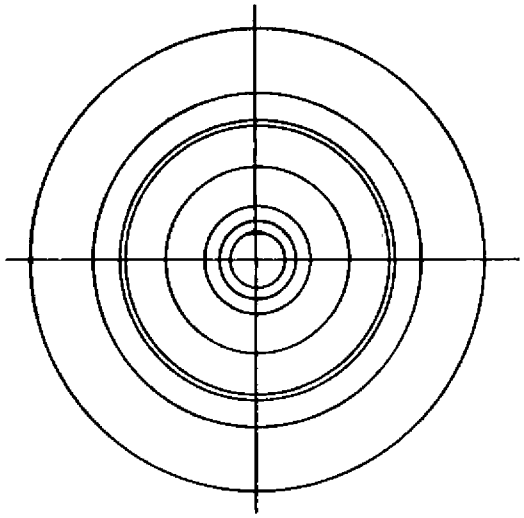

ACCESSORIES

Grid Ring Conn. Assy.
RT-55052
Conn. Fila. Large
RT-54764
Conn. Fila. Small
RT-54765
Cooling Boiler
RT-55166
or
Boiler Condenser Assy.
RT-55384

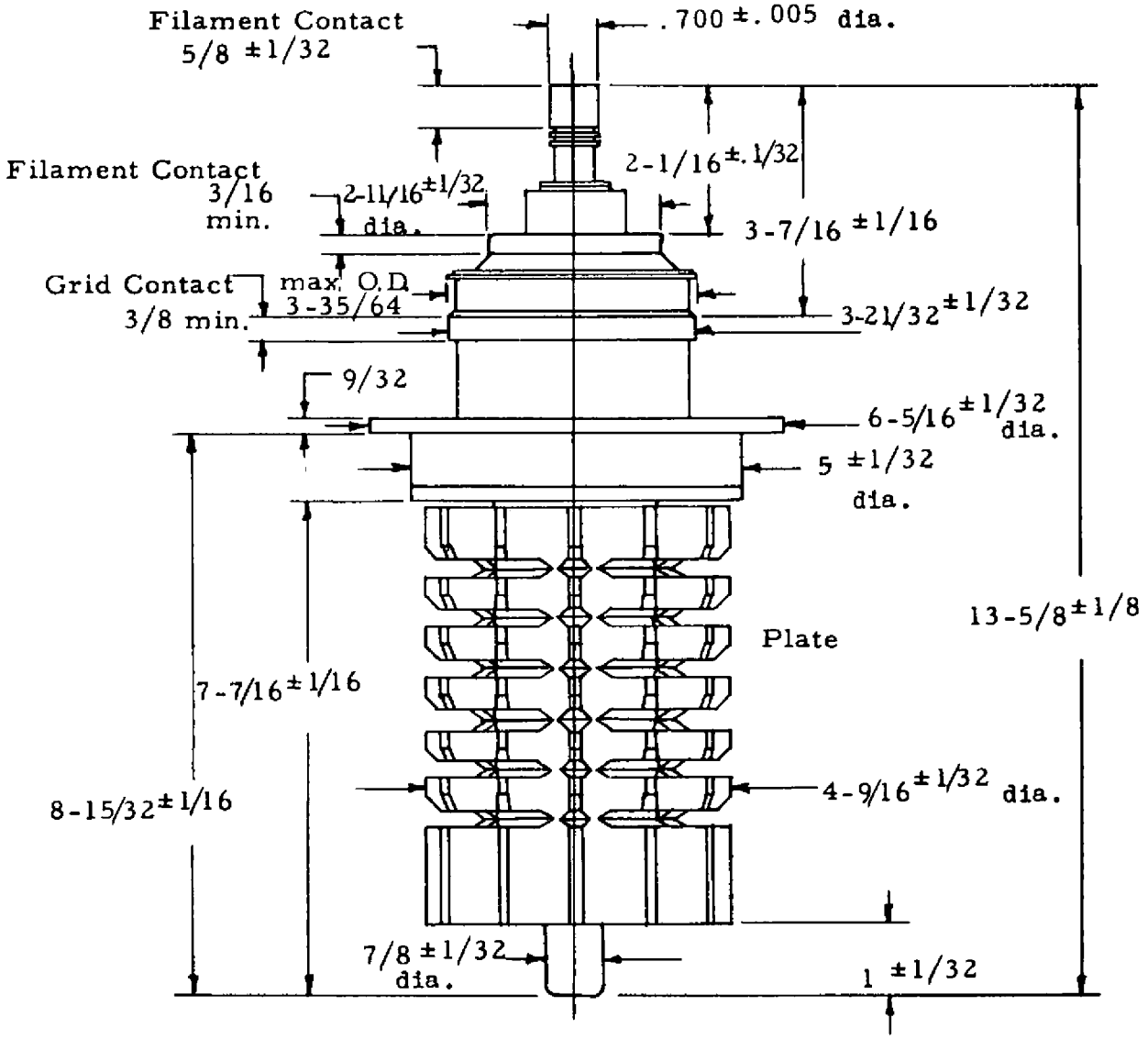

Note: Contact areas are to be concentric within .025"

OUTLINE

engineering TUBE DATA

F-7837, F-7838 AND F-7839 POWER TRIODES

ITT Components Division

DESCRIPTION:

THESE TYPES ARE THREE-ELECTRODE TUBES DESIGNED FOR USE AS RADIO FREQUENCY AMPLIFIER, OSCILLATOR, OR CLASS B MODULATOR. THEY MAY ALSO BE USED IN PULSE APPLICATIONS AS A HARD TUBE MODULATOR. THE CATHODE IS A THORIATED TUNGSTEN FILAMENT. THE F-7837 HAS A WATER COOLED, HEAVY-WALL ANODE CAPABLE OF 90 KW DISSIPATION. THE F-7838 HAS A FORCED AIR-COOLED, HEAVY-WALL ANODE CAPABLE OF 25 KW DISSIPATION. THE F-7839 HAS A FORCED AIR-COOLED ANODE, SMALLER IN SIZE AND RATING TO ACCOMMODATE PULSE APPLICATIONS OF LOW AVERAGE PLATE DISSIPATION.

ELECTRICAL:

FILAMENT VOLTAGE	12.6	VOLTS
FILAMENT CURRENT	285	AMPERES
FILAMENT STARTING CURRENT FULL RATED VOLTAGE MAY BE SAFELY APPLIED TO THE COLD FILAMENT	1000	AMPERES
FILAMENT COLD RESISTANCE	.006	OHMS
AMPLIFICATION FACTOR I_B = 2 AMPERES E_C = -50 VOLTS	41	
INTER-ELECTRODE CAPACITANCES		
GRID-PLATE	37	UUF
GRID-FILAMENT	85	UUF
PLATE-FILAMENT	2.4	UUF

MECHANICAL:

MOUNTING POSITION						VERTICAL, ANODE DOWN	
MAXIMUM GLASS & SEAL TEMPERATURE *						180°	C
	F-7837				F-7838	F-7839	
PLATE DISSIPATION	90	70	50	30	25	10	KILOWATTS
WATER FLOW **	30	22	16	10	-	-	GPM
WATER JACKET PRESSURE DROP	15	9	4.5	2	-	-	PSI
AIR FLOW		-			1800	800	CFM
STATIC AIR PRESSURE		-			2.2	2.75	INCHES OF WATER
NET WEIGHT, APPROX.		25			125	60	LBS

* AT THE UPPER FREQUENCIES, SPECIAL ATTENTION SHOULD BE GIVEN TO PROVIDE ADEQUATE COOLING TO THE DISH AND SEALS TO LIMIT THE TEMPERATURE TO 180°C MAX.

** USING WATER JACKET RT-54319

ITT ELECTRON TUBE DEPARTMENT
COMPONENTS DIVISION
INTERNATIONAL TELEPHONE AND TELEGRAPH CORPORATION
P. O. BOX 412, CLIFTON, NEW JERSEY

6-61

from JEDEC release #3434, Sept. 25, 1961

MAXIMUM RATINGS AND TYPICAL OPERATING CONDITIONS:

AUDIO-FREQUENCY POWER AMPLIFIER AND MODULATOR - CLASS B

MAXIMUM RATINGS, ABSOLUTE VALUES

D-C PLATE VOLTAGE	19,500	VOLTS
MAXIMUM SIGNAL D-C PLATE CURRENT *	12	AMPERES
MAXIMUM SIGNAL PLATE INPUT *	175	KILOWATTS
PLATE DISSIPATION *		
REFER TO PLATE DISSIPATION RATINGS ON PAGE 1		

TYPICAL OPERATION
(UNLESS OTHERWISE SPECIFIED, VALUES ARE FOR TWO TUBES)

D-C PLATE VOLTAGE	16,000	VOLTS
D-C GRID VOLTAGE	-270	VOLTS
PEAK A-F GRID-TO-GRID VOLTAGE	1,540	VOLTS
ZERO SIGNAL D-C PLATE CURRENT	2	AMPERES
MAXIMUM SIGNAL D-C PLATE CURRENT	22.3	AMPERES
EFFECTIVE LOAD RESISTANCE, PLATE-TO-PLATE	1,490	OHMS
MAX. SIGNAL DRIVING POWER, APPROX.	1,500	WATTS
MAX. SIGNAL POWER OUTPUT, APPROX.	225	KILOWATTS

* AVERAGED OVER ANY AUDIO FREQUENCY CYCLE OF SINE-WAVE FORM.

RADIO-FREQUENCY POWER AMPLIFIER - CLASS B
(CARRIER CONDITIONS PER TUBE FOR USE WITH A MAX. MODULATION FACTOR OF 1.0)

MAXIMUM RATINGS, ABSOLUTE VALUES

D-C PLATE VOLTAGE	17,500	VOLTS
D-C PLATE CURRENT	14	AMPERES
PLATE INPUT	150	KILOWATTS
PLATE DISSIPATION		
(REFER TO PLATE DISSIPATION RATINGS ON PAGE 1)		

TYPICAL OPERATION

D-C PLATE VOLTAGE	15,000	VOLTS
D-C GRID VOLTAGE	-280	VOLTS
PEAK R-F GRID VOLTAGE	500	VOLTS
D-C PLATE CURRENT	7.7	AMPERES
PEAK R-F PLATE VOLTAGE	6,500	VOLTS
D-C GRID CURRENT	.110	AMPERES
DRIVING POWER, APPROX. **	1,640	WATTS
POWER OUTPUT, APPROX.	40	KILOWATTS

** AT CREST OF AUDIO-FREQUENCY CYCLE WITH MODULATION FACTOR OF 1.0

PLATE-MODULATED RADIO-FREQUENCY POWER AMPLIFIER - CLASS C TELEPHONY

(CARRIER CONDITIONS PER TUBE FOR USE WITH A MAXIMUM MODULATION FACTOR OF 1.0)

MAXIMUM RATINGS, ABSOLUTE VALUES

D-C PLATE VOLTAGE	14,000	VOLTS
D-C GRID VOLTAGE	-3,000	VOLTS
D-C PLATE CURRENT	13.5	AMPERES
D-C GRID CURRENT	1.8	AMPERES
PLATE INPUT	160	KILOWATTS
PLATE DISSIPATION (67% OF RATED PLATE DISSIPATION REFERENCED ON PAGE 1)		

TYPICAL OPERATION

D-C PLATE VOLTAGE	14,000	VOLTS
D-C GRID VOLTAGE	-800	VOLTS
PEAK R-F GRID VOLTAGE	1,500	VOLTS
D-C PLATE CURRENT	11	AMPERES
D-C GRID CURRENT	1.5	AMPERES
DRIVING POWER, APPROXIMATE	2.2	KILOWATTS
POWER OUTPUT, APPROXIMATE	110	KILOWATTS

RADIO-FREQUENCY POWER AMPLIFIER AND OSCILLATOR - CLASS C TELEGRAPHY

(KEY DOWN CONDITIONS PER TUBE WITHOUT AMPLITUDE MODULATION) *

MAXIMUM RATINGS, ABSOLUTE VALUES	2 MC TO 22 MC	BELOW 2 MC	
D-C PLATE VOLTAGE	17,500	19,500	VOLTS
D-C GRID VOLTAGE	-3,000	-3,000	VOLTS
D-C PLATE CURRENT	17	17	AMPERES
D-C GRID CURRENT	1.8	1.8	AMPERES
PLATE INPUT	200	270	KILOWATTS
PLATE DISSIPATION (REFER TO PLATE DISSIPATION RATINGS ON PAGE 1)			

* MODULATION ESSENTIALLY NEGATIVE MAY BE USED IF THE POSITIVE PEAK OF THE ENVELOPE DOES NOT EXCEED 115 PER CENT OF CARRIER CONDITIONS.

Typical Operation	2 mc to 22 mc	Below 2 mc	
D-C Plate Voltage	14,000	16,000	Volts
D-C Grid Voltage	-1,000	-1,200	Volts
Peak R-F Grid Voltage	1,900	2,100	Volts
D-C Plate Current	14	15.5	Amperes
D-C Grid Current, approx.	1.7	1.7	Amperes
Driving Power, approx.	3.6	3.7	Kilowatts
Power Output, approx.	130	180	Kilowatts

Series Regulator Operation

Maximum Ratings, Absolute Values

D-C Plate Voltage	65	Kilovolts
Peak Positive Plate Voltage	70	Kilovolts
D-C Grid Voltage	-4	Kilovolts
D-C Plate Current	25	Amperes
Grid Dissipation	2	Kilowatts
Plate Dissipation - Refer to Plate Dissipation Ratings on Page 1		

Typical Operation

D-C Plate Voltage	55	Kilovolts
D-C Plate Current Regulated	20	Amperes
D-C Grid Voltage, approx.	300	Volts
D-C Grid Current, approx.	5.5	Amperes
Grid Cut-Off Voltage, approx.	1.5	Kilovolts
Plate Output Voltage	53	Kilovolts
Plate Output Power	1.06	MW

Hard Tube Modulator

Maximum Ratings, Absolute Values

D-C Plate Voltage	65	65**	Kilovolts
Peak Positive Plate Voltage	70	70**	Kilovolts
D-C Grid Voltage	-4.0	-4.0**	Kilovolts
Peak Positive Grid Voltage	4.0	4.0**	Kilovolts
Pulse Cathode Current	160	230**	Amperes
Grid Dissipation	2000	2000**	Watts
Duty Factor	.06	.06**	
Pulse Length	2000	2000**	u sec.

** These ratings apply only under elevated filament temperatures as specified as follows:

	Min.	Bogey	Max.	
Filament Voltage	13.2	13.6	14.0	Volts
Filament Emission E_F = 13.2 v $E_P = E_G$ = 3 kv -30	200			Amperes

Additional information for specific applications can be obtained from the

Electron Tube Applications Section
ITT Components Division
P.O. Box 412
Clifton, New Jersey

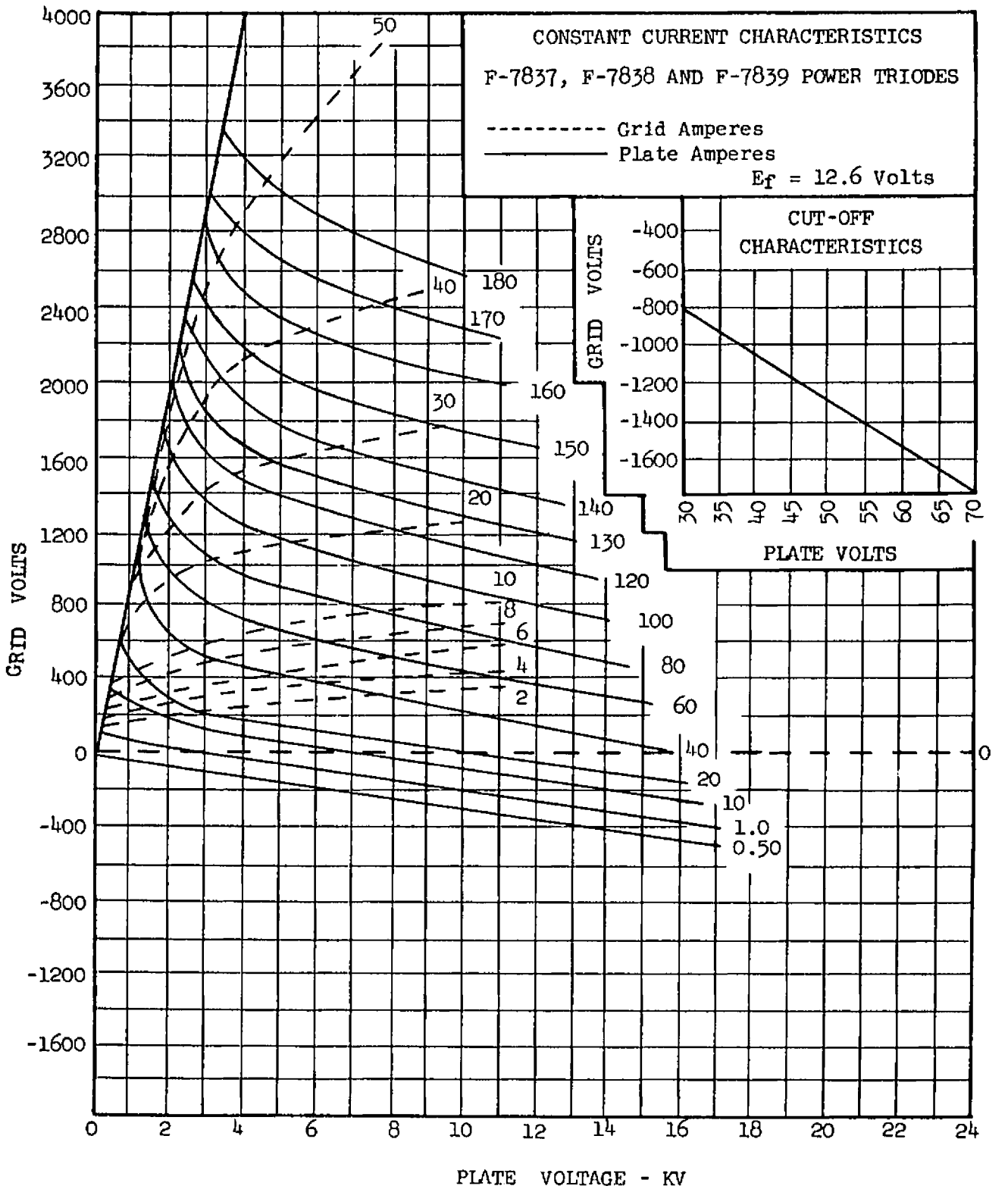
CONSTANT CURRENT CHARACTERISTICS
F-7837, F-7838 AND F-7839 POWER TRIODES
---------- Grid Amperes
———— Plate Amperes
Ef = 12.6 Volts
CUT-OFF CHARACTERISTICS
GRID VOLTS
PLATE VOLTS
GRID VOLTS
PLATE VOLTAGE - KV
4000
3600
3200
2800
2400
2000
1600
1200
800
400
0
-400
-800
-1200
-1600
0 2 4 6 8 10 12 14 16 18 20 22 24
50
40
30
20
10
8
6
4
2
180
170
160
150
140
130
120
100
80
60
40
20
10
1.0
0.50
-400
-600
-800
-1000
-1200
-1400
-1600
30 35 40 45 50 55 60 65 70

TERMINALS

Black - Grid
Yellow - Fil. 1
Red - Fil. 2

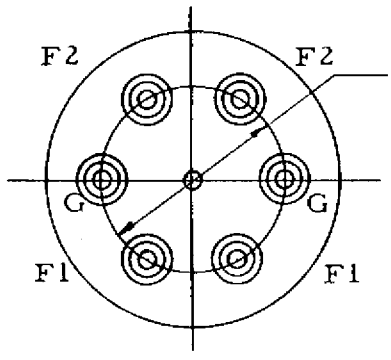

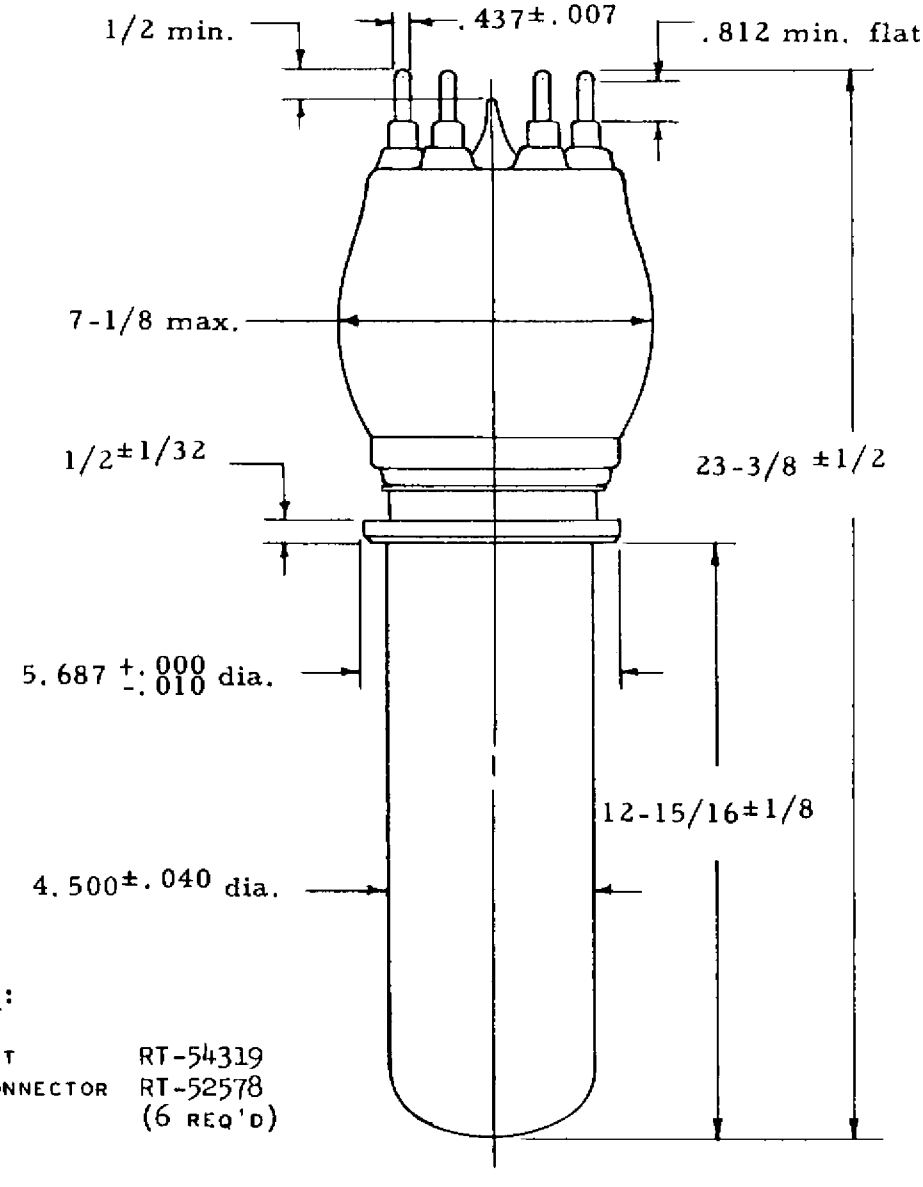

ACCESSORIES:

WATER JACKET	RT-54319
TERMIANL CONNECTOR	RT-52578 (6 REQ'D)

OUTLINE

F-7837 POWER TRIODE

TERMINALS

Black - Grid
Yellow - Fil. 1
Red - Fil. 2

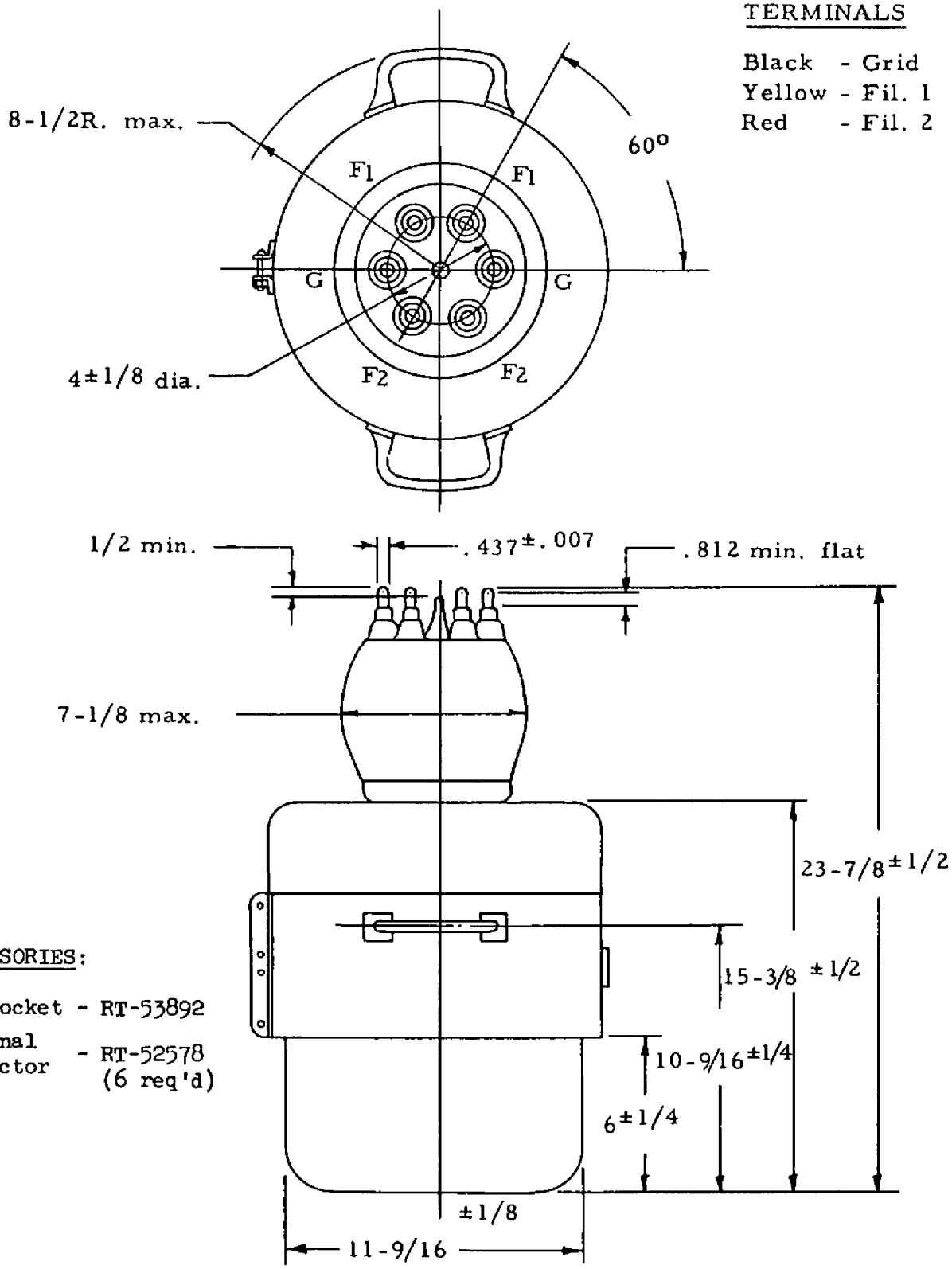

ACCESSORIES:

Air Socket - RT-53892
Terminal Connector - RT-52578 (6 req'd)

OUTLINE
F-7838 POWER TRIODE

TERMINALS

Black - Grid
Yellow - Fil. 1
Red - Fil. 2

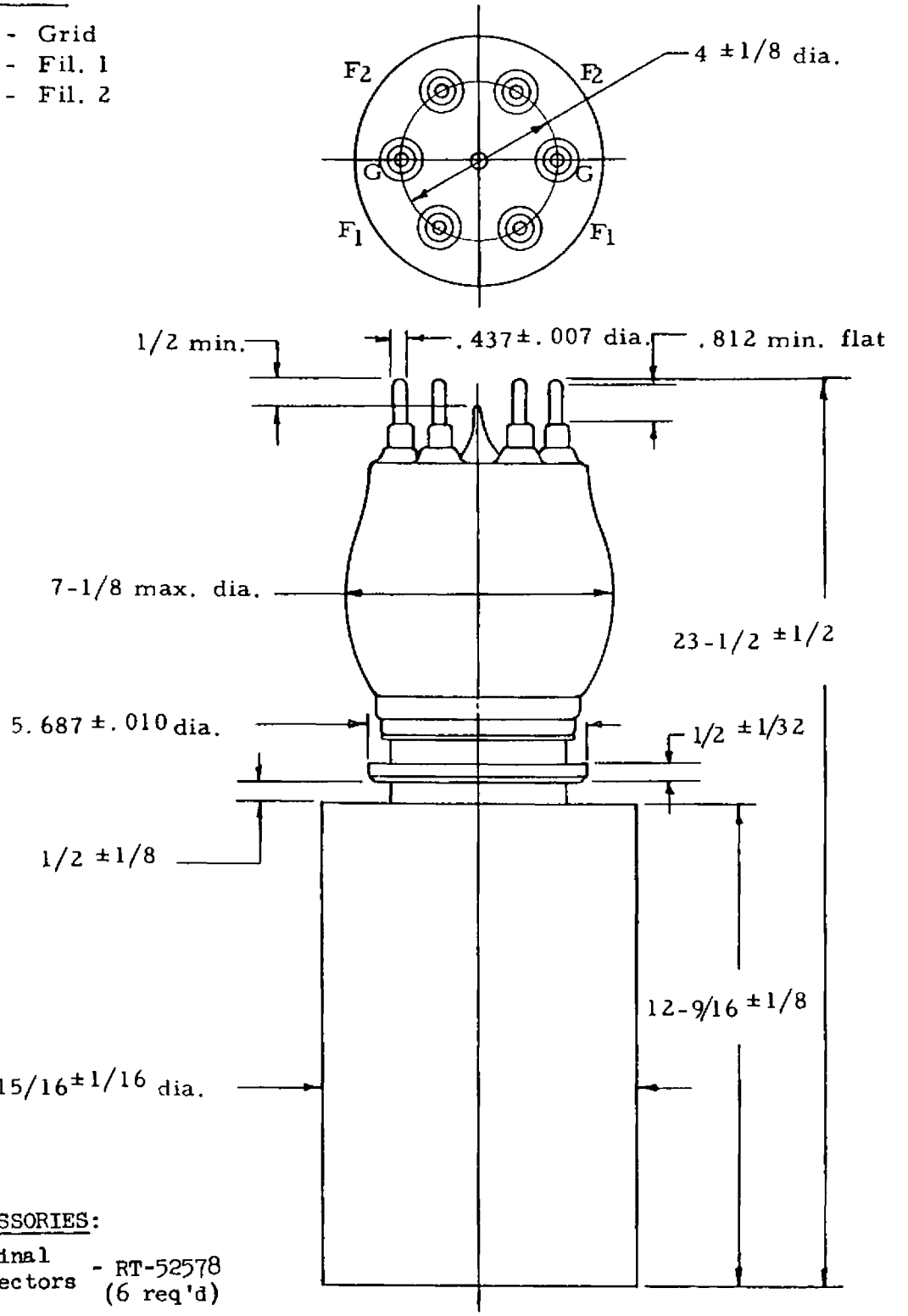

ACCESSORIES:

Terminal Connectors - RT-52578 (6 req'd)

OUTLINE
F-7839 POWER TRIODE

ELECTRON TUBE DEPARTMENT ■ COMPONENTS DIVISION
INTERNATIONAL TELEPHONE AND TELEGRAPH CORPORATION, CLIFTON, NEW JERSEY

7847

General Characteristics

The F-7847 traveling wave tube employing a helix type wave propagating structure is a power amplifier for operation in the 5000 to 6000 Mc frequency range. The power output is approximately 10 watts with a minimum gain of 27 db and the tube is air or water cooled. It is designed for CW operation with a maximum duty cycle of 1.0. The input and output fittings are designed to mate with TNC type connectors. A solenoid provides the magnetic field and is not integral with the tube.

ELECTRICAL DATA GENERAL

Heater Voltage	6.3 (±5%)	Volts
Heater Current at 6.3 Volts	2.2	Amps

MECHANICAL DATA GENERAL

Envelope	Metal
Power Connection	Winchester PM6P
R.F. Connectors	TNC Female
Cathode	Unipotential Oxide
Focusing	Electromagnetic
Cooling	Water cooled jacket or air cooled (as specified)
Mounting Position	Any
Weight (approx.)	14 Oz.

ABSOLUTE RATINGS

Voltages shown are with respect to cathode

Maximum Anode Voltage	3000	Volts
Maximum Control Electrode Voltage	0	Volts
Maximum Collector Dissipation	200	Watts
Maximum Cathode Current	70	mAdc
Maximum Helix Current	2	mAdc

TYPICAL OPERATION

Conditions:			
Magnetic Focusing Field		1200	Gauss
Focus Electrode Voltage		0	Volts
Anode Voltage		2800	Volts

Characteristics:	Min.	Max.	
Frequency	5.0	6.0	Gc
Helix Current		2.0	mAdc
Cathode Current		70.0	mAdc
R.F. Power Output	10.0		Watts
Gain	27.0		db
Output VSWR		2.5:1	-

ITT
ELECTRON TUBE DEPARTMENT ■ COMPONENTS DIVISION
INTERNATIONAL TELEPHONE AND TELEGRAPH CORPORATION, CLIFTON, NEW JERSEY

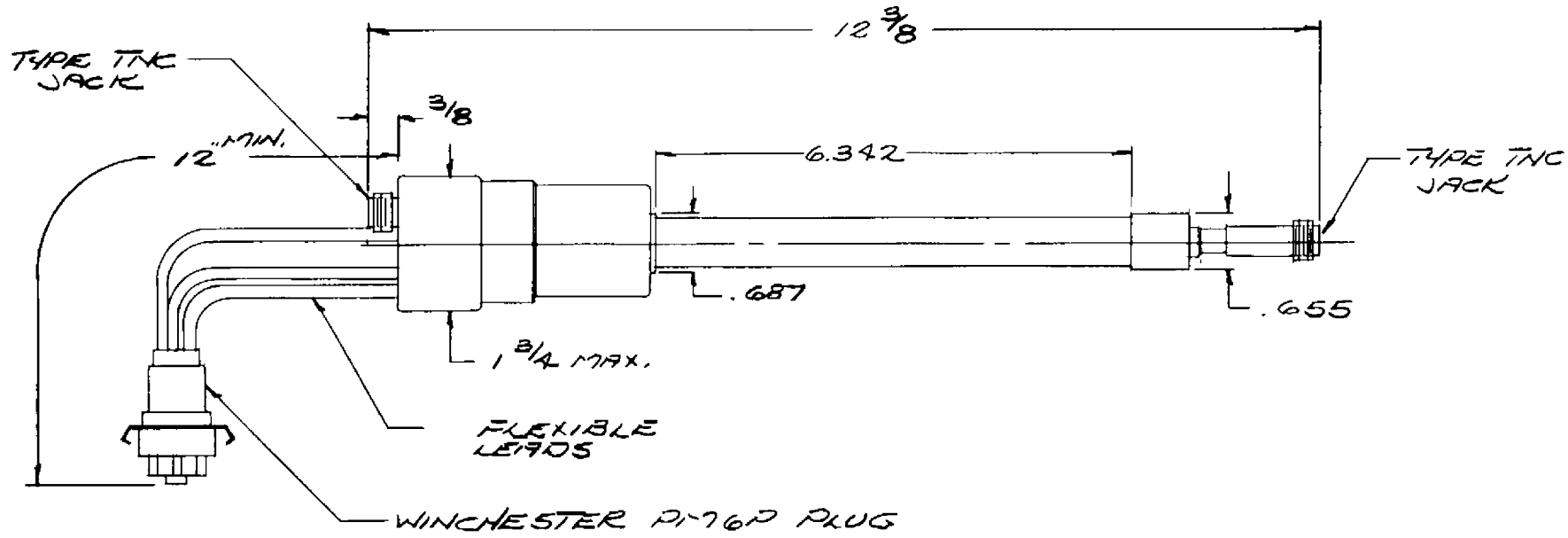

JEDEC TYPE F-7847

from JEDEC release #3613, Feb. 26, 1962

engineering TUBE DATA

**
F-7906 AND
F-7907
POWER DIODES

ITT Components Division

DESCRIPTION:

THE F-7906 AND F-7907 ARE DIODES THAT MAY BE USED IN RECTIFIER SERVICE OR IN SPECIAL APPLICATIONS IN SHUNTING OR CHARGING CIRCUITS WHEREVER HIGH PEAK INVERSE VOLTAGES, EXTREME ENVIRONMENTAL CONDITIONS, OR HIGH OPERATING FREQUENCIES AND TRANSIENTS ARE PRESENT. THE EXCEPTIONALLY RUGGED CONSTRUCTION MAKES THESE TYPES ADAPTABLE TO A WIDE RANGE OF USES. THE HIGH THERMAL INERTIA OF THE HEAVY WALL EXTERNAL ANODE PROTECTS AGAINST TUBE DAMAGE DURING MOMENTARY OVERLOAD CONDITIONS. THE CATHODE IS A THORIATED TUNGSTEN FILAMENT OF MESH CONSTRUCTION.

ELECTRICAL:

FILAMENT VOLTAGE	7.0	VOLTS
FILAMENT CURRENT	265	AMPERES
FILAMENT STARTING CURRENT	1,000	AMPERES
CAPACITANCE INTER-ELECTRODE	45	UUF

MAXIMUM RATINGS	SHUNT	CHARGING	RECTIFIER	
MAXIMUM PEAK INVERSE VOLTAGE	55	55	50	KILOVOLTS
MAXIMUM PEAK PLATE CURRENT	130*	20 RMS	45	AMPERES
MAXIMUM AVERAGE PLATE CURRENT	-	-	15	AMPERES

MECHANICAL:

MOUNTING POSITION	VERTICAL, ANODE UP OR DOWN	
TYPE OF COOLING	SEE BELOW	

	F-7906			F-7907			
PLATE DISSIPATION	50	40	30	20	15	10	KILOWATTS
WATER FLOW	30	22	15	-	-	-	GPM
WATER JACKET PRESSURE DROP	11	6.5	3	-	-	-	PSI
AIR FLOW (NOTE 1)	-	-	-	1250	800	600	MIN. CFM
STATIC AIR PRESSURE	-	-	-	3.5	2.0	1.0	INCHES OF WATER
MAX. INCOMING AIR TEMPERATURE	45°C						
MAX. RADIATOR CORE TEMPERATURE	180°C			(NOTES 2 & 3)			
MAX. GLASS AND SEAL TEMPERATURE	180°C					180°C	(NOTE 3)
NET WEIGHT						72	LBS.

* MAXIMUM PEAK PLATE CURRENT OF UP TO 180 AMPERES IS RATED UNDER FILAMENT EXCITATION VOLTAGE OF 7.6 VOLTS.

** FORMERLY D-1034-A AND B

ITT ELECTRON TUBE DEPARTMENT
COMPONENTS DIVISION
INTERNATIONAL TELEPHONE AND TELEGRAPH CORPORATION
P.O. BOX 412, CLIFTON, NEW JERSEY

12-61

NOTE 1: COOLING AIR SHOULD BE APPLIED BEFORE OR SIMULTANEOUSLY WITH THE APPLICATION OF ANY VOLTAGES. AIR FLOW SHOULD CONTINUE APPROXIMATELY TWO MINUTES AFTER THE REMOVAL OF ALL VOLTAGES.

NOTE 2: MEASURED ON THE CORE AT END AWAY FROM INCOMING AIR.

NOTE 3: A TEMPERATURE SENSITIVE LACQUER MANUFACTURED BY THE TEMPIL CORPORATION, 132 W. 22ND STREET, NEW YORK 11, N.Y., IS CONVENIENT FOR THIS MEASUREMENT.

ADDITIONAL INFORMATION FOR SPECIFIC APPLICATIONS CAN BE OBTAINED FROM THE:

ELECTRON TUBE APPLICATIONS SECTION
ITT COMPONENTS DIVISION
POST OFFICE BOX 412
CLIFTON, NEW JERSEY

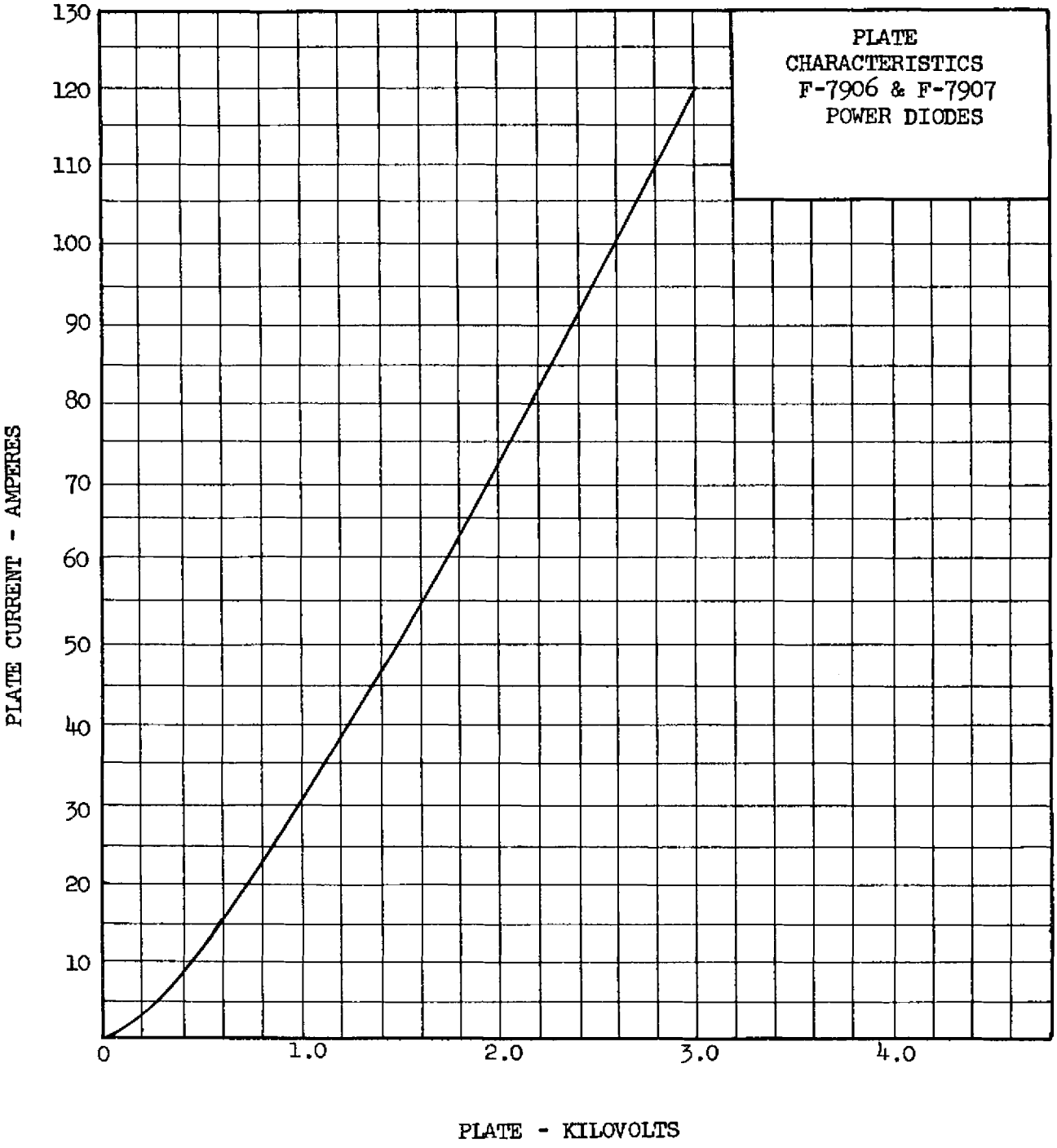
PLATE
CHARACTERISTICS
F-7906 & F-7907
POWER DIODES
PLATE CURRENT - AMPERES
130
120
110
100
90
80
70
60
50
40
30
20
10
0
1.0
2.0
3.0
4.0
PLATE - KILOVOLTS

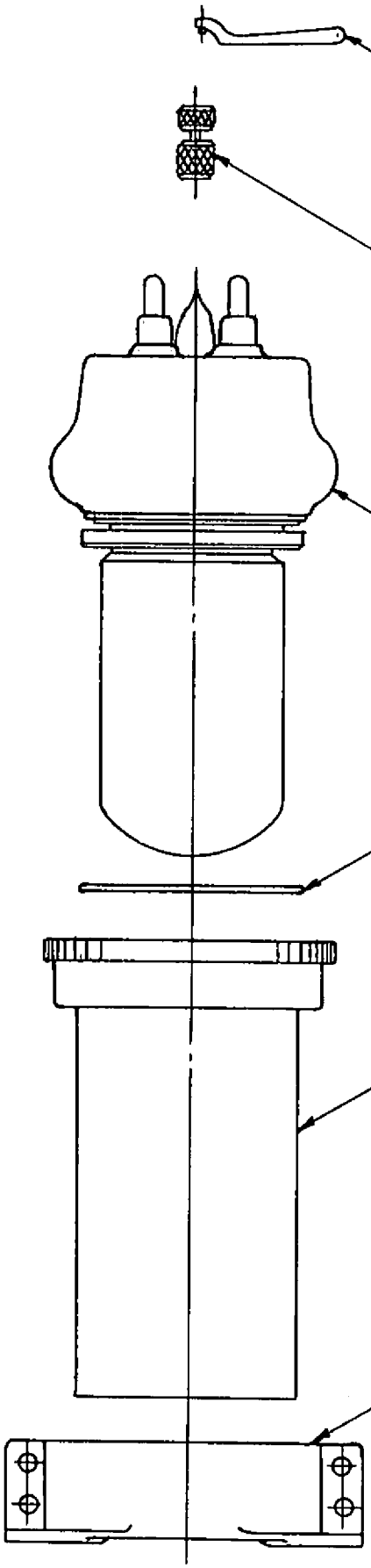

Spanner Wrench
RT-52843-1 (2 req'd)
(not to scale)

Terminal Connector Assy.
RT-52578-1 (4 req'd)

Tube Type
F-7906

'O' Ring - Type "CC"
RT-53836-1

Water Jacket
Type "C"
RT-54319-12

Mounting Clamp
RT-53492-1

ACCESSORIES

Terminals

Fil. #1 - Yellow
Fil. #2 - Red

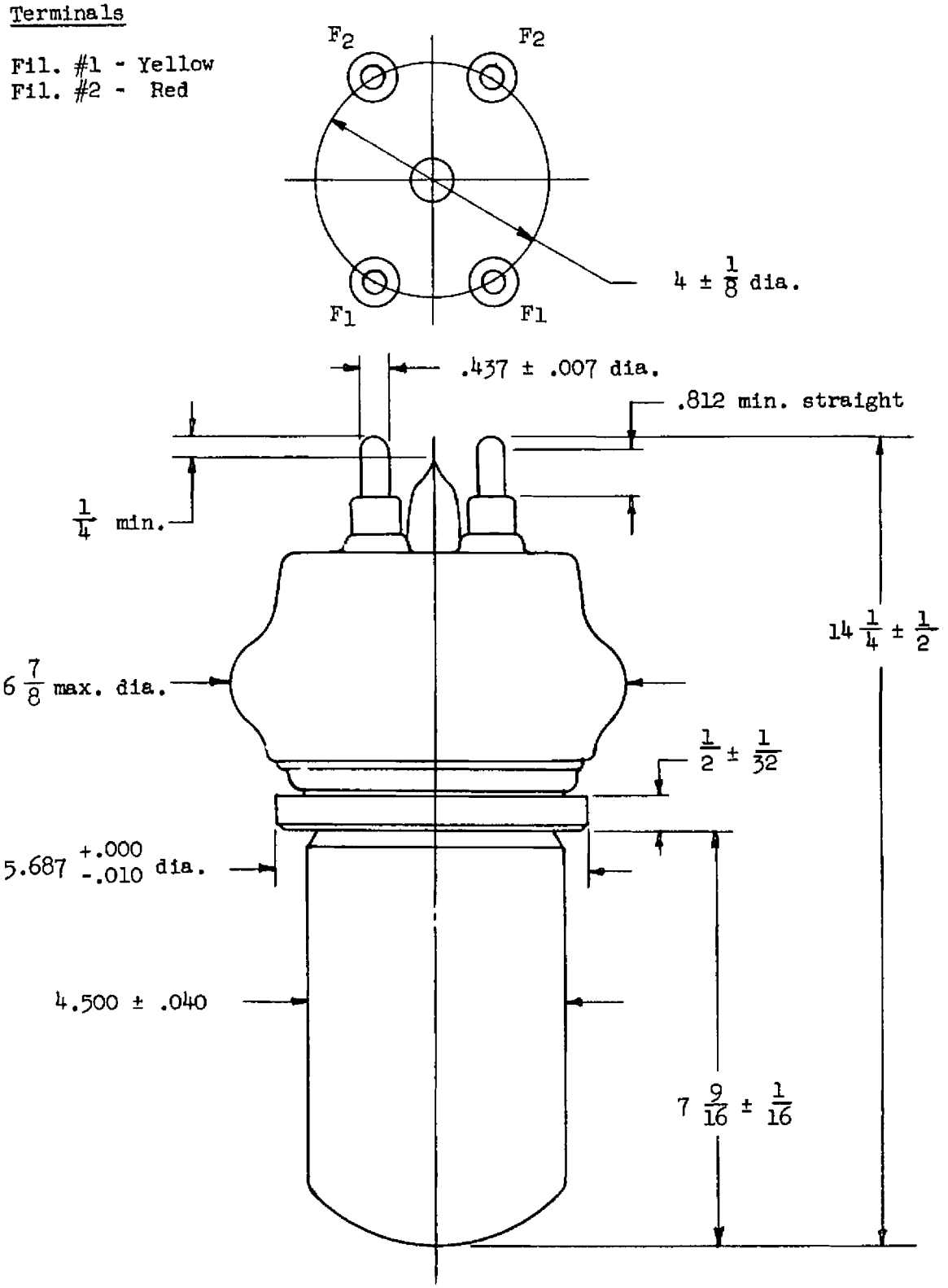

OUTLINE

F-7906 POWER DIODE

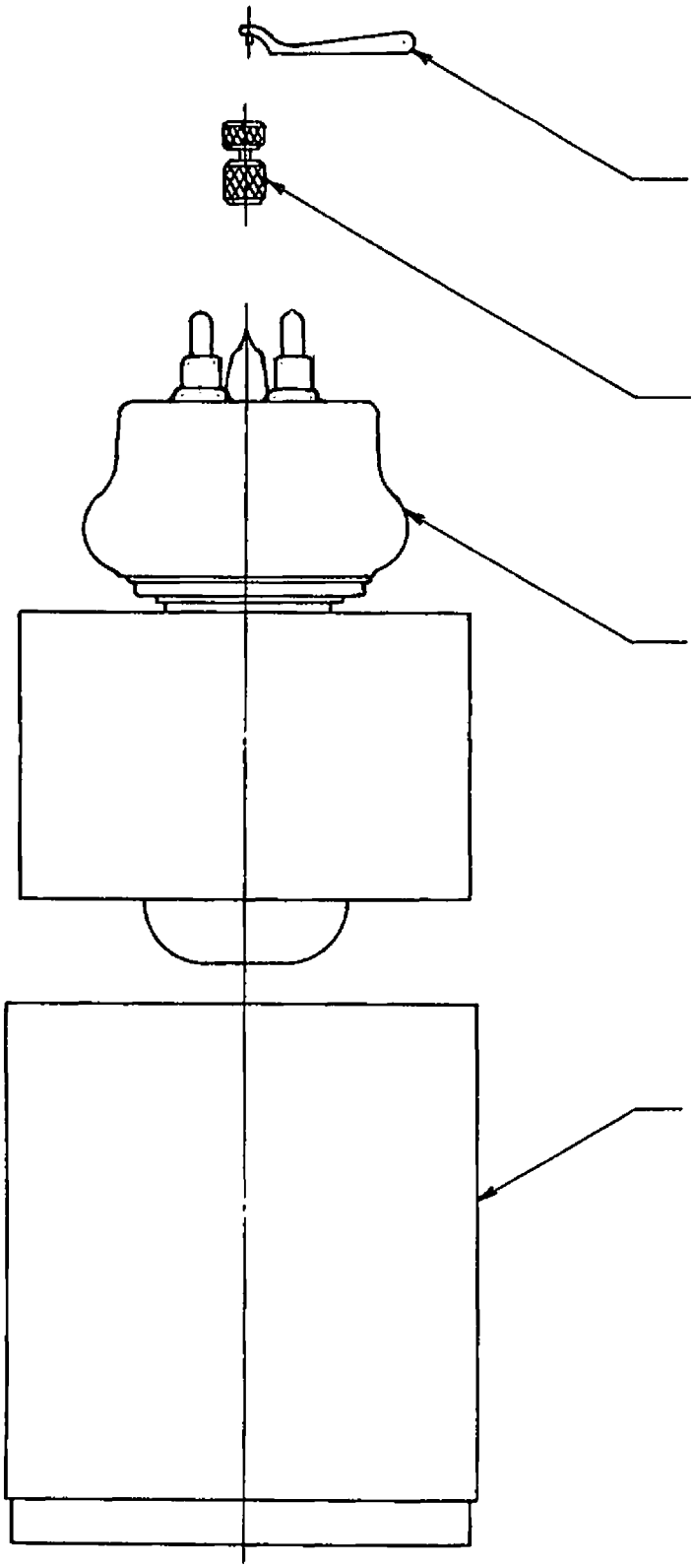

Spanner Wrench
RT-52843-1
(2 req'd)

Terminal Connector Assy.
RT-52578-1
(4 req'd)

Tube Type
F-7907

Air Jacket
Type "B"
RT-54628-1

ACCESSORIES

Terminals

Fil. #1 - Yellow
Fil. #2 - Red

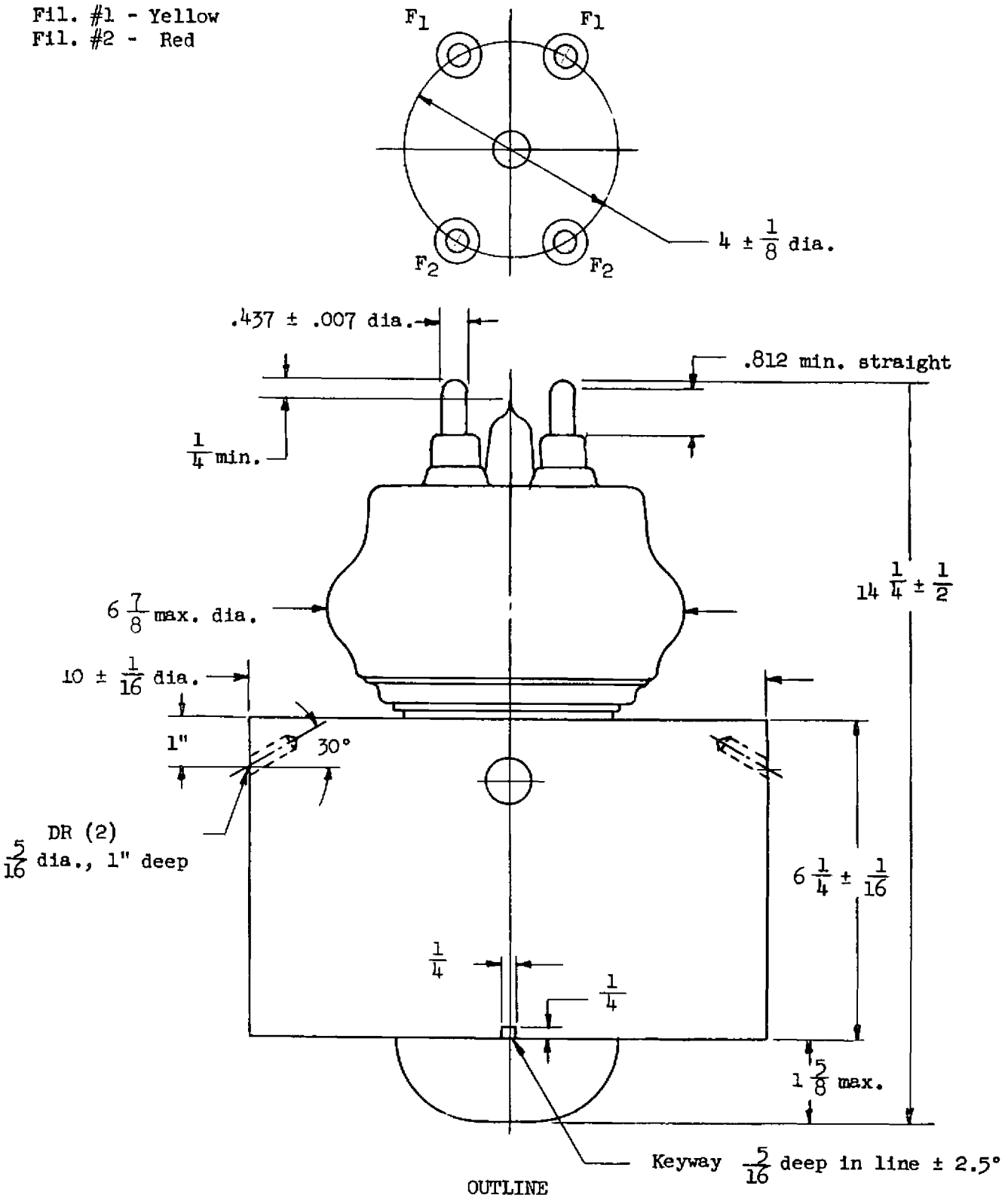

OUTLINE
F-7907 POWER DIODE

from JEDEC release #3703, April 23, 1962

engineering TUBE DATA

F-7975 *
POWER
DIODE

ITT Components Division

DESCRIPTION

The F-7975 is a diode designed for rectifier service or in special applications in shunting or charging circuits. The construction is exceptionally rugged with a thoriated tungsten filamentary cathode of bifilar helical construction. The anode is forced air-cooled and is capable of dissipating 3.5 kw.

ELECTRICAL

Filament Voltage			15	volts
Filament Current			36	amperes
Filament Starting Current Full rated filament voltage may be safely applied to the cold filament				
Maximum Ratings	**Shunt**	**Charging**	**Rectifier**	
Max. Peak Inverse Voltage	55	55	46	kilovolts
Max. Peak Plate Current	100	100	21	amperes
Max. Average Plate Current	-	-	5	amperes
Max. Peak Inverse Voltage x Average Plate Current			165,000	
Inter-Electrode Capacitance			11.5	µµf

MECHANICAL

Mounting Position			Vertical, Anode up or down	
Max. Glass & Seal Temperature			180	°C
Type of Cooling			Forced	air
Anode Air Flow Required				
Plate Dissipation	3.5	2.8	2.4	kilowatts
Minimum Air Flow	190	125	75	cfm
Pressure--inches of water	1.6	.78	.35	
Max. Incoming Air Temperature			45	°C
Net Weight, approx.			7	lbs.

Additional information for specific applications can be obtained from the:

ITT Components Division
Electron Tube Applications Section
P.O. Box 412
Clifton, New Jersey

* Formerly the D-1042.

3-62

ITT ELECTRON TUBE DEPARTMENT
COMPONENTS DIVISION
INTERNATIONAL TELEPHONE AND TELEGRAPH CORPORATION
P. O. BOX 412, CLIFTON, NEW JERSEY

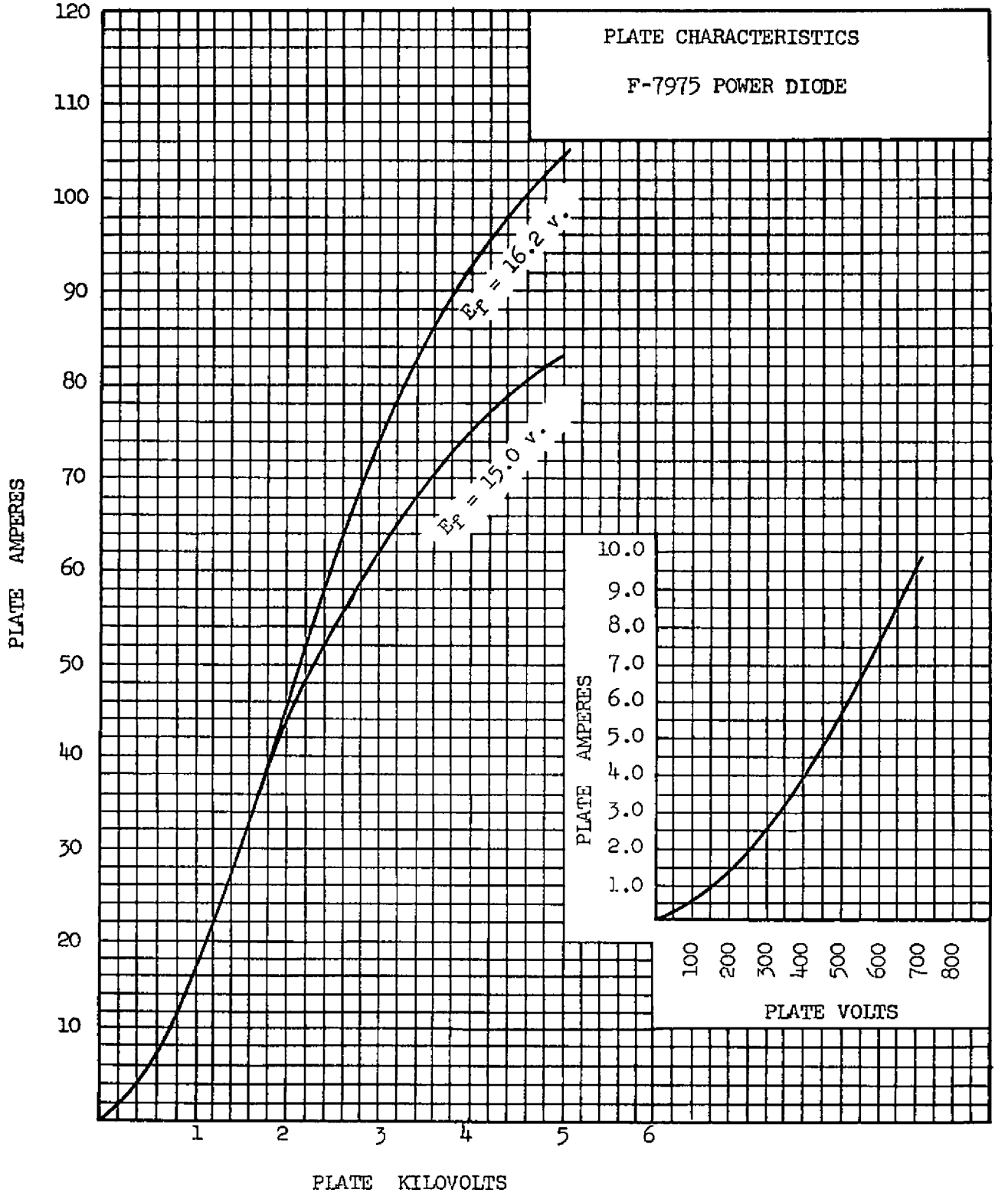
PLATE CHARACTERISTICS
F-7975 POWER DIODE
Ef = 16.2 v.
Ef = 15.0 v.
PLATE AMPERES
120
110
100
90
80
70
60
50
40
30
20
10
1
2
3
4
5
6
PLATE KILOVOLTS
PLATE AMPERES
10.0
9.0
8.0
7.0
6.0
5.0
4.0
3.0
2.0
1.0
100
200
300
400
500
600
700
800
PLATE VOLTS

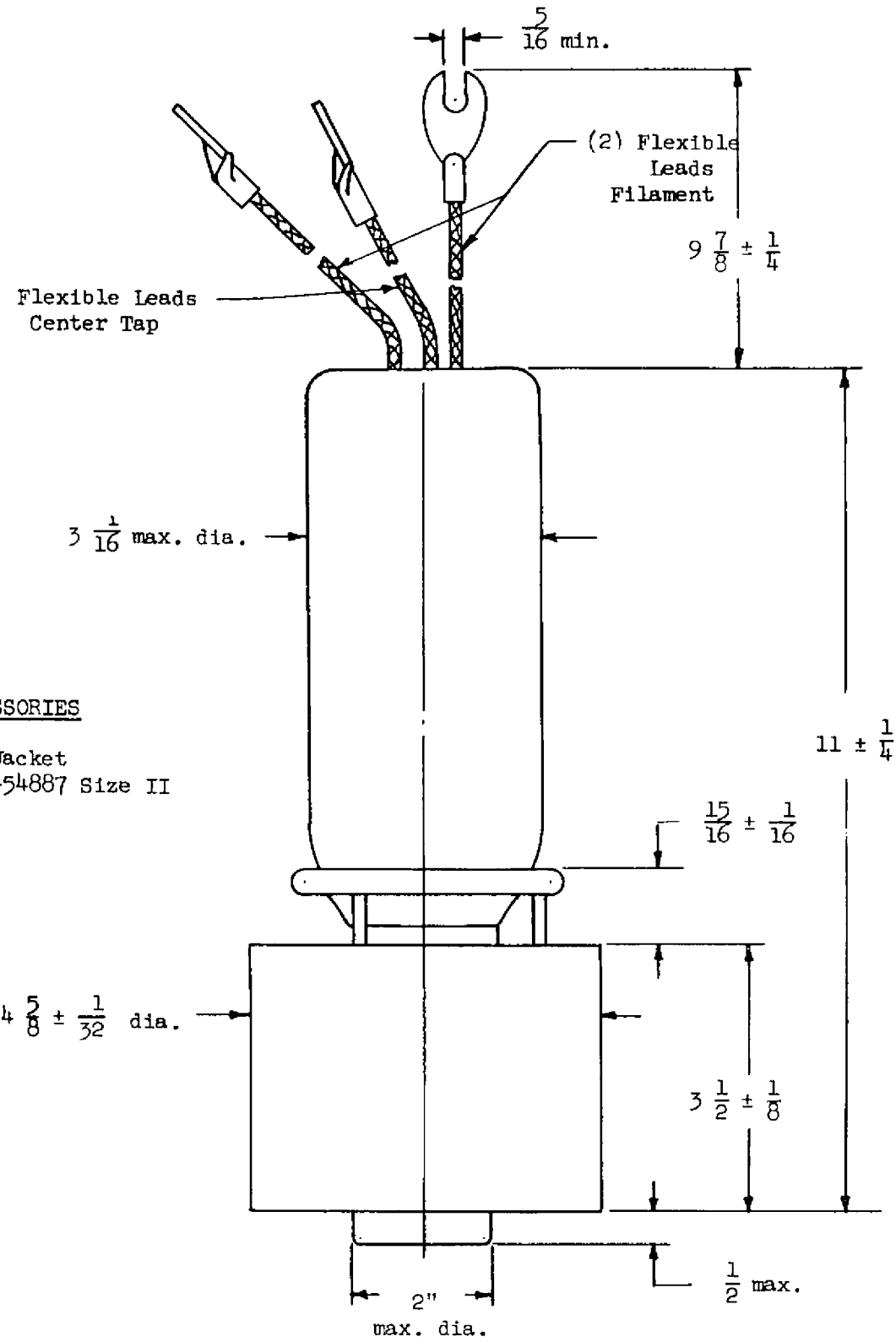

ACCESSORIES

Air Jacket
RT-54887 Size II

OUTLINE
F-7975 POWER DIODE

engineering TUBE DATA

F-8033 ♀
POWER TRIODE

ITT Components Division

from JEDEC release #4005,
Dec. 3, 1962

DESCRIPTION

The F-8033 is a three-electrode tube designed for use as a radio frequency amplifier, oscillator, or Class B modulator. The anode is water-cooled, capable of dissipating 225 kilowatts. The cathode is a thoriated tungsten filament. Maximum ratings apply up to 24 megacycles.

ELECTRICAL

Filament Voltage	15.5	volts
Filament Current	420	amperes
Filament Starting Current	1000	max. amperes
Filament Cold Resistance	.0045	ohms
Minimum Heating Time	3	minutes
Amplification Factor		
E_c = -200 volts; I_b = 5 amperes	16	
Inter-Electrode Capacitances		
Grid-Plate	110	μμf
Grid-Filament	140	μμf
Plate-Filament	6	μμf

MECHANICAL

Mounting Position	Vertical, anode down	
Type of Cooling	Water and Forced Air	
Maximum Outgoing Water Temperature	70	°C
Water Flow	40	gpm
Specified water flow must start upon application of any voltages and may be removed simultaneously with filament and plate power.		
Air Flow		
To Air Manifold++	300	cfm, min.
To Filament Seals	40	cfm, min.
Cooling air to start with the application of any voltages and may be removed simultaneously with filament and plate power.		
Maximum Glass and Seal Temperature	180	°C
Net Weight	65	lbs., approx.

♀ Formerly our D-1037.

++ Approximately 1/4" water pressure at manifold.

ITT ELECTRON TUBE DEPARTMENT
COMPONENTS DIVISION
INTERNATIONAL TELEPHONE AND TELEGRAPH CORPORATION
P. O. BOX 412, CLIFTON, NEW JERSEY

7/62

AUDIO-FREQUENCY POWER AMPLIFIER AND MODULATOR - CLASS B

MAXIMUM RATINGS, ABSOLUTE VALUES

D-C Plate Voltage	23	kilovolts
Maximum Signal D-C Plate Current *	20	amperes
Maximum Signal Plate Input *	460	kilowatts
Plate Dissipation *	225	kilowatts

TYPICAL OPERATION
(Unless otherwise specified, values are for two tubes)

D-C Plate Voltage	18	kilovolts
D-C Grid Voltage	-1200	volts
Peak A-F Grid-to-Grid Voltage	3500	volts
Zero Signal D-C Plate Current	6	amperes
Maximum Signal D-C Plate Current	38	amperes
Effective Load Resistance Plate-to-Plate	960	ohms
Maximum Signal Driving Power, approx.	3350	watts
Maximum Signal Power Output, approx.	430	kilowatts

* Averaged over any audio frequency cycle of sine-wave form.

RADIO FREQUENCY POWER AMPLIFIER AND OSCILLATOR - CLASS C TELEGRAPHY
(Key down conditions without AM)

MAXIMUM RATINGS, ABSOLUTE VALUES	2 mc to 24 mc	Below 2 mc	
D-C Plate Voltage	18	25	kilovolts
D-C Grid Voltage	-4	-4	kilovolts
D-C Plate Current	25	25	amperes
D-C Grid Current	3.5	3.5	amperes
Plate Input	360	500	kilowatts
Plate Dissipation	225	225	kilowatts

TYPICAL OPERATION

D-C Plate Voltage	14	18	kilovolts
D-C Grid Voltage	-1.8	-2.4	kilovolts
Peak R-F Grid Voltage	2.6	3.1	kilovolts
D-C Plate Current	20.0	23.5	amperes
D-C Grid Current, approx.	2.0	1.9	amperes
R-F Load Resistance	300	327	ohms
Driving Power, approx.	5.2	6.0	kilowatts
Power Out, approx.	200	300	kilowatts

R-F POWER AMPLIFIER AND OSCILLATOR-PLATE PULSED OPERATION

MAXIMUM RATINGS, ABSOLUTE VALUES

Peak Plate Pulse Supply Voltage	45	kilovolts
D-C Grid Voltage	-8000	volts
Peak Cathode Current	** 600	amperes
Plate Dissipation	225	kilowatts
Grid Dissipation	5000	watts
Pulse Length	50	μseconds

TYPICAL OPERATION	Cathode Drive	Grid Drive	
Peak Plate Pulse Supply Voltage	40	40	kilovolts
D-C Grid Voltage	-6000	-6000	volts
D-C Plate Current (during Pulse)	118	118	amperes
D-C Grid Current (during Pulse)	17.5	17.5	amperes
Peak R-F Plate Voltage	34	34	kilovolts
Peak R-F Grid Voltage	9.8	9.8	kilovolts
Driving Power (during Pulse) approx.	1200	168	kilowatts
Power Output (during Pulse) approx.	4580	3570	kilowatts
R-F Load Resistance	208	162	ohms
Duty Factor	.01	.01	

** Approximately 50% additional cathode emission is available at 8% above rated filament voltage. Filament operational life under these conditions will be reduced to approximately 30% that of normal filament voltage.

MODULATOR TUBE‡ - PULSED OPERATION
(SWITCH TUBE APPLICATIONS)

MAXIMUM RATINGS, ABSOLUTE VALUES

D-C Plate Voltage	65	max. kilovolts
Peak Positive Voltage (Instantaneous)	70	max. kilovolts
D-C Grid Voltage	-8	max. kilovolts
Peak Positive Grid Voltage	8	max. kilovolts
Pulse Plate Current	500	max. amperes
Pulse Grid Current	120	max. amperes
Pulse Cathode Current	600	max. amperes
Grid Dissipation	5	max. kilowatts
Pulse Length	2000	max. μseconds

TYPICAL OPERATION

D-C Plate Voltage	50	60	kilovolts
Pulse Plate Current	450	350	amperes
D-C Grid Voltage	-5.0	-6.0	kilovolts
Pulse Grid Current	90	68	amperes
Pulse Positive Grid Voltage	3.2	2.4	kilovolts
Plate Output Voltage	44	54	kilovolts
Pulse Power Output	19.8	19.0	megawatts

‡ Due to the high power capabilities, the tube must be protected against faults originating in the tube or circuitry. This can best be achieved by shorting the rectifier to ground by means of an electronic "crow-bar" circuit.

Additional information for specific applications can be obtained from the

Electron Tube Applications Section
ITT Components Division
P.O. Box 412
Clifton, New Jersey

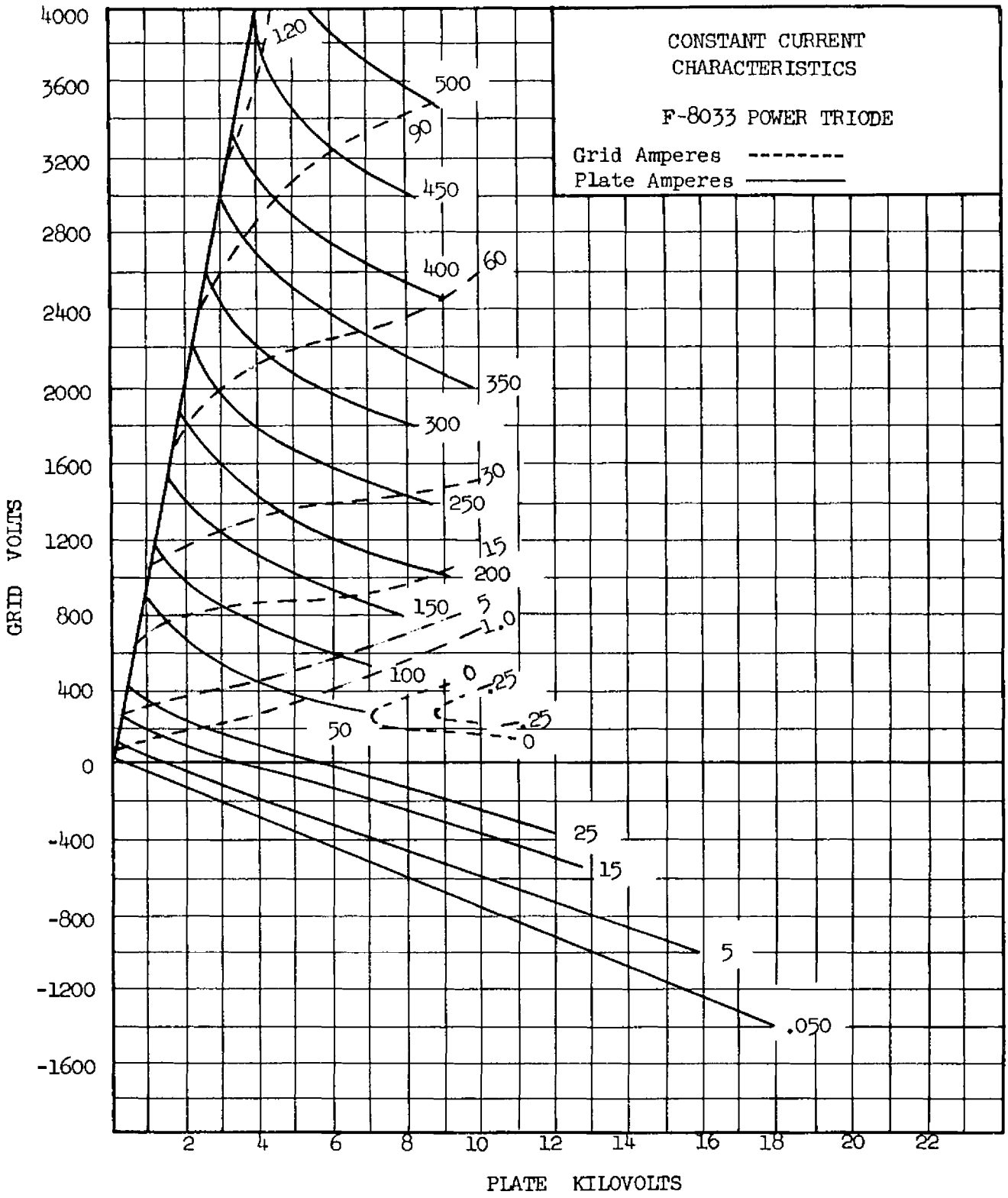
CONSTANT CURRENT
CHARACTERISTICS
F-8033 POWER TRIODE
Grid Amperes --------
Plate Amperes ————
GRID VOLTS
PLATE KILOVOLTS
4000
3600
3200
2800
2400
2000
1600
1200
800
400
0
-400
-800
-1200
-1600
2
4
6
8
10
12
14
16
18
20
22
120
500
90
450
400
60
350
300
30
250
15
200
150
5
1.0
100
0
.25
50
.25
0
25
15
5
.050

7/62

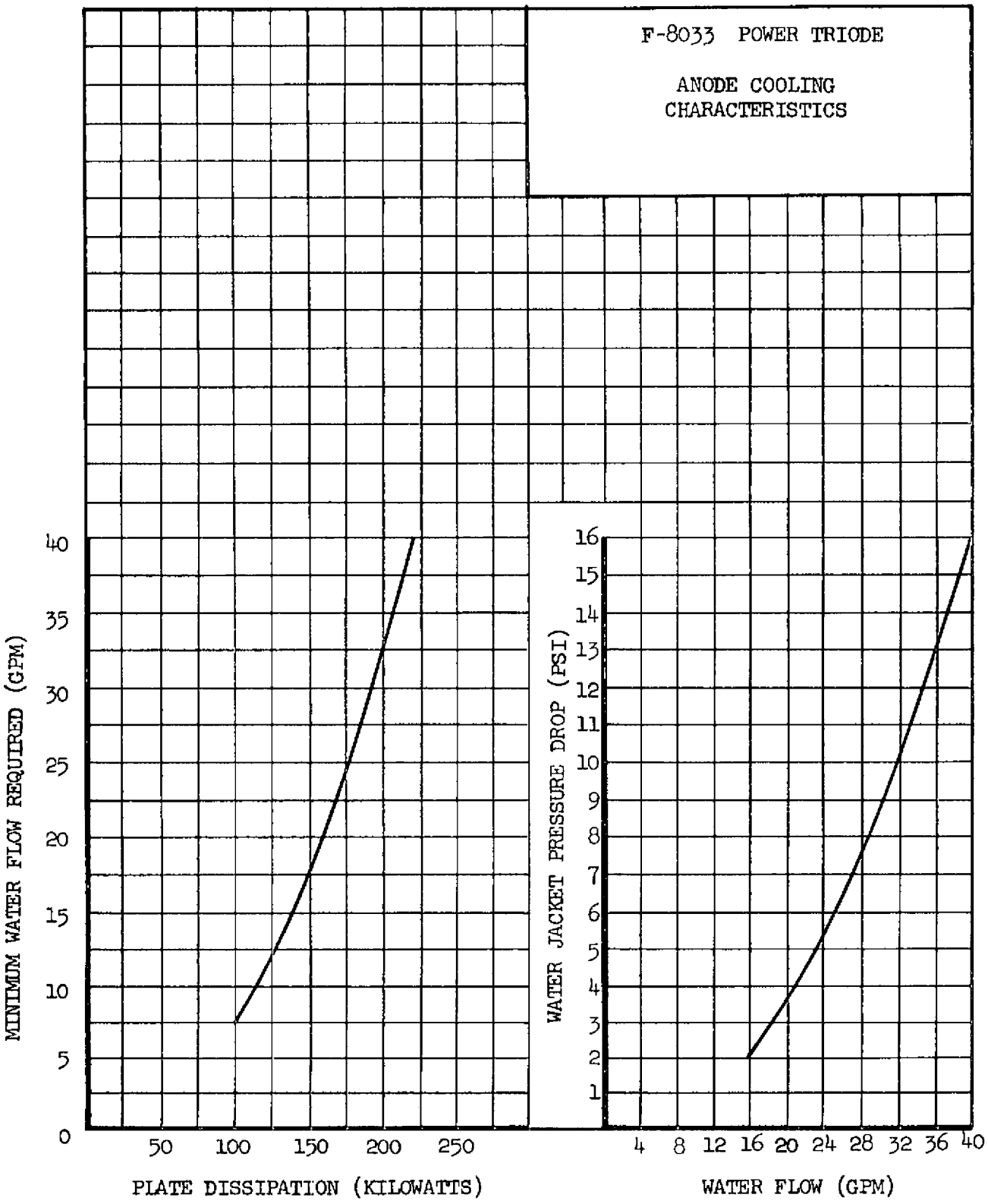
F-8033 POWER TRIODE
ANODE COOLING
CHARACTERISTICS
MINIMUM WATER FLOW REQUIRED (GPM)
0
5
10
15
20
25
30
35
40
50
100
150
200
250
PLATE DISSIPATION (KILOWATTS)
WATER JACKET PRESSURE DROP (PSI)
1
2
3
4
5
6
7
8
9
10
11
12
13
14
15
16
4
8
12
16
20
24
28
32
36
40
WATER FLOW (GPM)

7/62

FIL. #1 - Yellow
FIL. #2 - Red

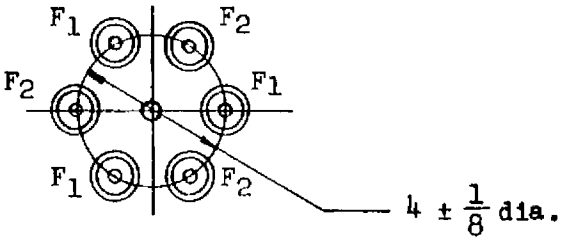

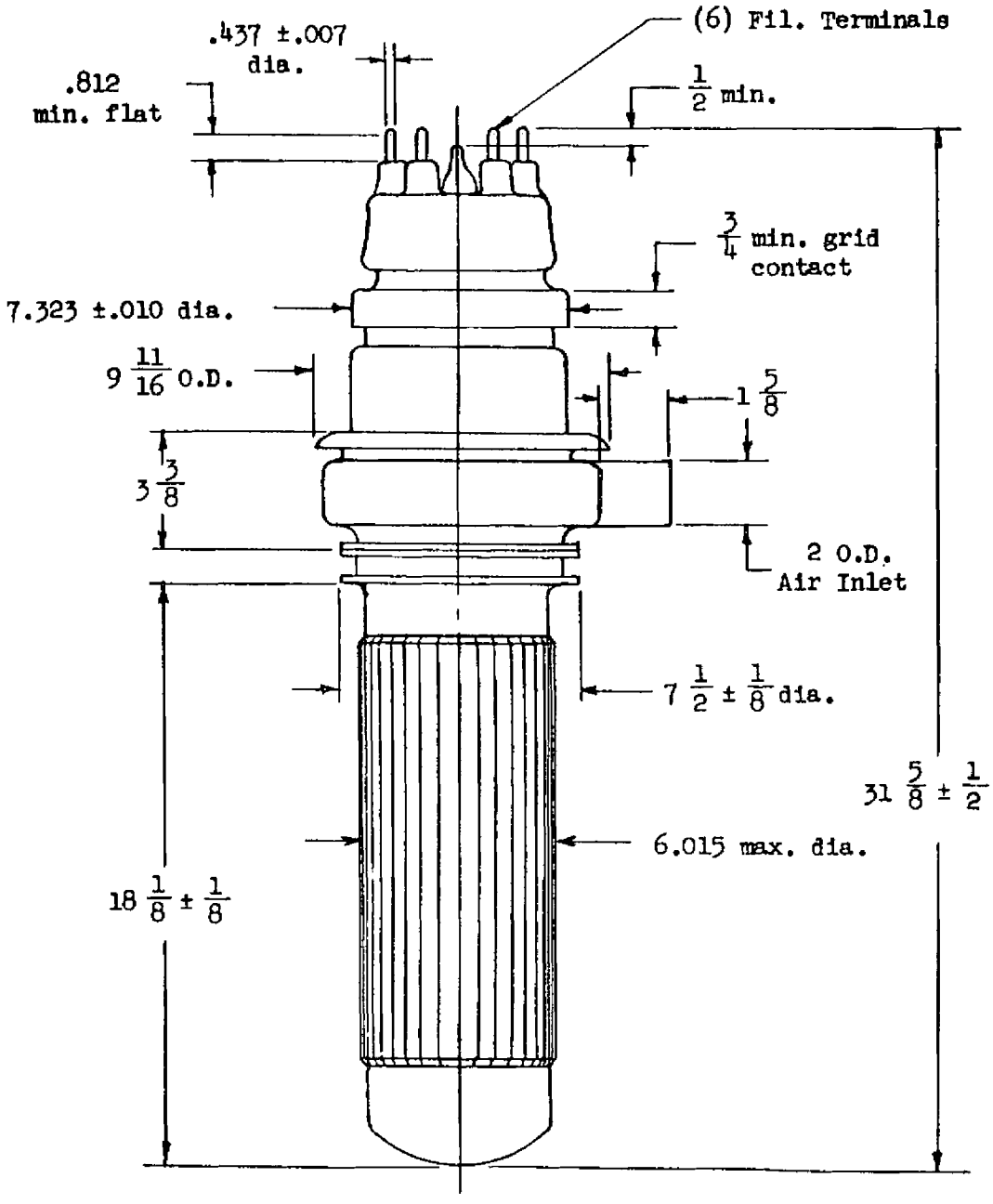

OUTLINE - F-8033 POWER TRIODE

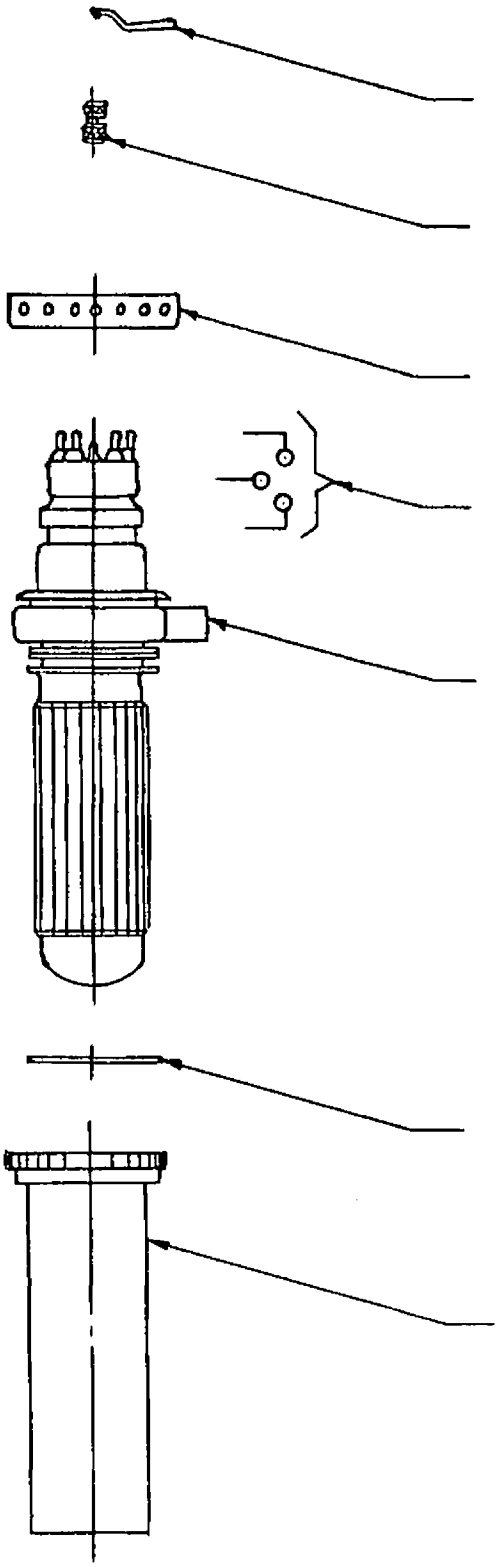

SPANNER WRENCH
RT-52843 2 Req'd.

TERMINAL CONNECTOR ASSY. - 6 Req'd.
RT-52578 (Ordering No.)
RT-54529 (Outline Dwg.)

GRID RING CONN. ASSY.
RT-54400 (Ordering No.)
RT-54480 (Outline Dwg.)

BALL GAP ASSY.
RT-54040 (Ordering No.)
RT-54481 (Outline Dwg.)

TUBE TYPE F-8033

GASKET-WATER JACKET
RT-53836 Size FF

WATER JACKET
RT-55152 (Outline Dwg)
RT-55113 (Ordering No.)

ACCESSORIES

from JEDEC release #3504, Nov. 27, 1961

engineering TUBE DATA

F-8034 *
POWER DIODE

ITT Components Division

DESCRIPTION

The F-8034 is a high vacuum, external anode diode designed for rectifier service or in special applications in shunting or charging circuits wherever high peak inverse voltages, extreme environmental conditions, or high operating frequencies and transients are present. The exceptionally rugged construction, free of internal insulators, spring tensioning devices and fragile elements, make this type adaptable to a wide range of uses. The anode is forced air-cooled and is capable of dissipating 3 kilowatts. The cathode is a thoriated tungsten filament.

ELECTRICAL

Filament Voltage			7.5 volts
Filament Current			51 amperes
Maximum Ratings:	Shunt	Charging	Rectifier
Max. Peak Inverse Voltage	25	25	25 kilovolts
Max. Peak Plate Current **	70	4.5 rms	20 amperes
Max. Average Plate Current	℞	-	3.0 amperes

**Maximum peak plate current for shunt conditions are rated under conditions of filament excitation voltage of 8.25 volts.

℞ Because of the wide variety of operating conditions, it is advisable that tube operation recommendations be obtained from our Engineering Department for specific conditions.

* Formerly D-1045

ITT ELECTRON TUBE DEPARTMENT
COMPONENTS DIVISION
INTERNATIONAL TELEPHONE AND TELEGRAPH CORPORATION
P. O. BOX 412, CLIFTON, NEW JERSEY

MECHANICAL

Mounting Position		Vertical, anode up or down	
Type of Cooling		Forced Air	
Anode Air Flow Required			
Plate Dissipation	1.8	2.4	3.0 kilowatts
Air Flow, minimum	90	130	165 cfm
Pressure	1.0	2.0	3.0 inches of water
Max. Incoming Air Temperature			20 °C
Max. Glass & Seal Temperature‡			180 °C
Net Weight, approx.			6.75 pounds

‡ A temperature sensitive lacquer manufactured by the Tempil Corporation, 132 West 22nd Street, New York, New York, is convenient for this measurement.

Additional information for specific applications can be obtained from the:

Electron Tube Applications Section
ITT Components Division
P.O. Box 412
Clifton, New Jersey

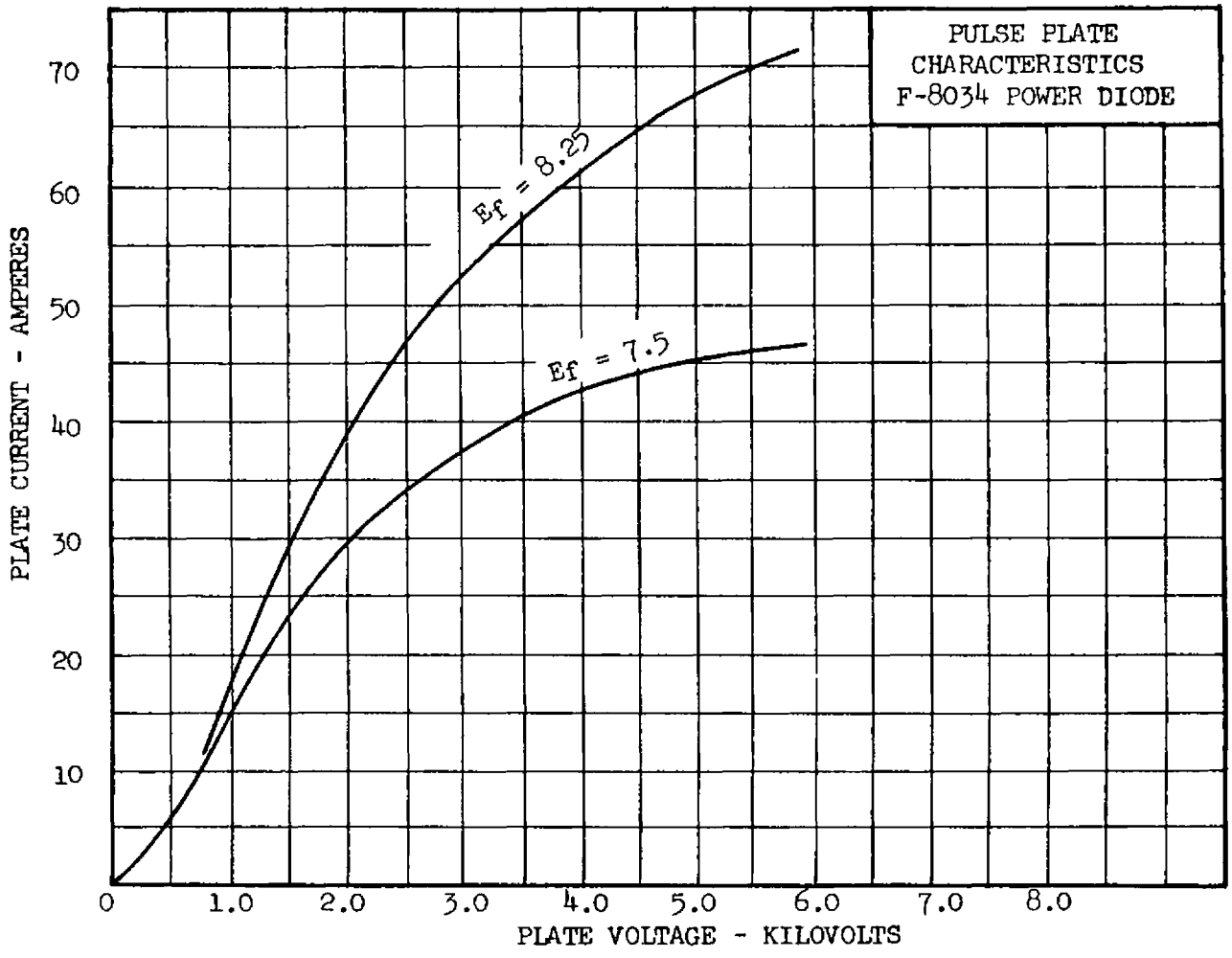
PULSE PLATE
CHARACTERISTICS
F-8034 POWER DIODE
Ef = 8.25
Ef = 7.5
PLATE CURRENT - AMPERES
70
60
50
40
30
20
10
0
1.0
2.0
3.0
4.0
5.0
6.0
7.0
8.0
PLATE VOLTAGE - KILOVOLTS

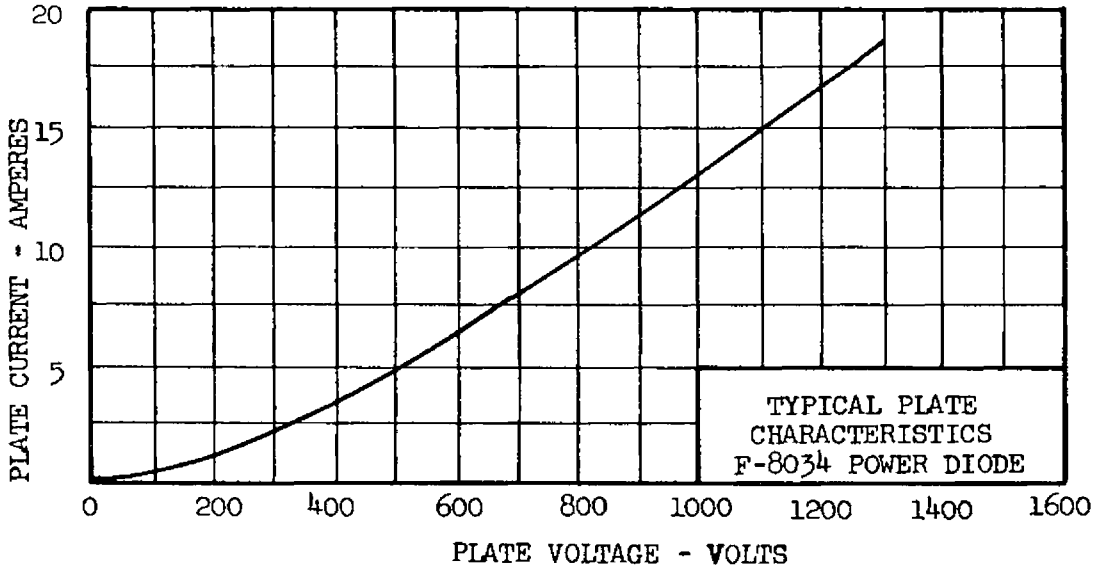
TYPICAL PLATE
CHARACTERISTICS
F-8034 POWER DIODE
PLATE CURRENT - AMPERES
20
15
10
5
0
200
400
600
800
1000
1200
1400
1600
PLATE VOLTAGE - VOLTS

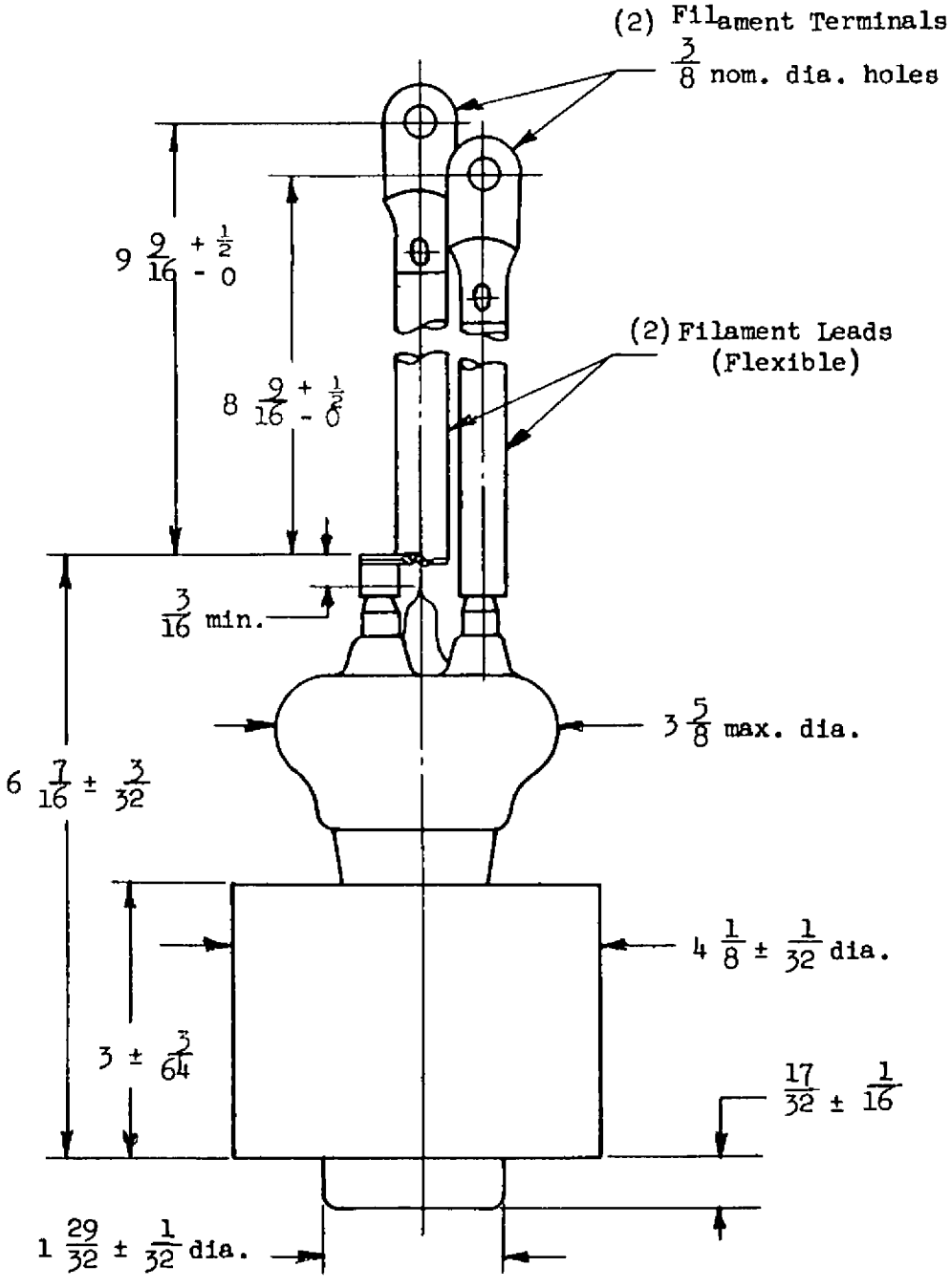

OUTLINE

F-8034 POWER DIODE

ACCESSORIES

Air Jacket - RT-54893
(Ordering No.)
- RT-54894
(Outline Dwg.)

10-61

ITT Electron Tube Division
BOX 104 CLIFTON, NEW JERSEY
INTERNATIONAL TELEPHONE AND TELEGRAPH CORPORATION

F-8045
POWER
TRIODE

DESCRIPTION:

The F-8045 is a three-electrode tube designed for use as a radio-frequency amplifier or oscillator. It may also be used in pulse applications in r-f circuits or as a hard tube modulator. The anode is cooled by circulating water and is capable of dissipating 90 kw. The cathode is a thoriated tungsten filament.

ELECTRICAL:

Filament Voltage	12.6	volts
Filament Current	285	amperes
Filament Starting Current Full rated voltage may be safely applied to the cold filament		
Filament Cold Resistance	.006	ohms
Amplification Factor E_c = -50 volts; I_b = 2.0 amperes	20	
Inter-Electrode Capacitance		
Grid-Plate	85	μμf
Grid-Filament	85	μμf
Plate-Filament	6.0	μμf

MECHANICAL:

Mounting Position	Vertical, anode down				
Type of Cooling	Water & Forced Air				
Maximum Outgoing Water Temperature				70	°C
Plate Dissipation	90	75	50	30	kilowatts
Water Flow **	30	22	13	7	gpm
Water Jacket Pressure Drop	15	9	3	1.5	psi
Maximum Glass & Seal Temperature				180	°C
Net Weight, approx.				25	lbs.

* Formerly our D-1031A

**Using Water Jacket RT-54319.

1-63

from JEDEC release #4504, Nov. 25, 1963

MAXIMUM RATINGS AND TYPICAL OPERATING CONDITIONS

Audio-Frequency Power Amplifier and Modulator - Class B

Maximum Ratings, Absolute Values

D-C Plate Voltage	18,000	volts
Max. Signal D-C Plate Current ✕	12	amperes
Max. Signal Plate Input ✕	175	kilowatts
Plate Dissipation ✕	90	kilowatts

Typical Operation
(Unless otherwise specified, values are for two tubes)

D-C Plate Voltage	14,000	volts
D-C Grid Voltage	-650	volts
Peak A-F Grid-to-Grid Voltage	2,400	volts
Zero Signal D-C Plate Current	2.0	amperes
Max. Signal D-C Plate Current	22.3	amperes
Effective Load Resistance, Plate-to-Plate	1,370	ohms
Max. Signal Driving Power, approx.	1,200	watts
Max. Signal Power Output, approx.	210	kilowatts

✕ Averaged over any audio frequency cycle of sine-wave form.

Radio-Frequency Power Amplifier - Class B
(Carrier conditions per tube for use with a maximum modulator factor of 1.0)

Maximum Ratings, Absolute Values

D-C Plate Voltage	16,000	volts
D-C Plate Current	14	amperes
Plate Input	150	kilowatts
Plate Dissipation	90	kilowatts

Typical Operation

D-C Plate Voltage	14,000	volts
D-C Grid Voltage	-650	volts
Peak R-F Grid Voltage	650	volts
D-C Plate Current	7.2	amperes
Peak R-F Plate Voltage	5,500	volts
D-C Grid Current	0	amperes
Driving Power, approx. ++	1,725	watts
R-F Load Resistance	460	ohms
Power Output, approx.	33	kilowatts

++ At crest of audio-frequency cycle with modulation factor of 1.0

Plate-Modulated Radio-Frequency Power Amplifier - Class C Telephony
(Carrier conditions per tube for use with a max. modulation factor of 1.0)

Maximum Ratings, Absolute Values

D-C Plate Voltage	12,500	volts
D-C Grid Voltage	-3,000	volts
D-C Plate Current	13.5	amperes
D-C Grid Current	2.0	amperes
Plate Input	160	kilowatts
Plate Dissipation	60	kilowatts

Typical Operation

D-C Plate Voltage	12,000	volts
D-C Grid Voltage	-1,400	volts
Peak R-F Plate Voltage	10,000	volts
Peak R-F Grid Voltage	2,100	volts
D-C Plate Current	10	amperes
D-C Grid Current	1.35	amperes
Driving Power, approx.	2.7	kilowatts
R-F Load Resistance	555	ohms
Power Output, approx.	90	kilowatts

Radio-Frequency Power Amplifier and Oscillator - Class C Telegraphy
(Key down conditions per tube without amplitude modulation) ⊛

Maximum Ratings, Absolute Values

D-C Plate Voltage	18,000	volts
D-C Grid Voltage	-3,000	volts
D-C Plate Current	17	amperes
D-C Grid Current	2.0	amperes
Plate Input	270	kilowatts
Plate Dissipation	90	kilowatts

⊛ Modulation essentially negative may be used if the positive peak of the envelope does not exceed 115 per cent of carrier conditions.

Radio-Frequency Power Amplifier and Oscillator - Class C Telegraphy (cont'd)

Typical Operation

D-C Plate Voltage	10,000	12,000	16,000	volts
D-C Grid Voltage	-1,200	-1,400	-1,800	volts
Peak R-F Plate Voltage	9,000	10,000	13,000	volts
Peak R-F Grid Voltage	1,825	2,100	2,600	volts
D-C Plate Current	7.6	10.0	13.2	amperes
D-C Grid Current, approx.	1.35	1.35	1.25	amperes
Driving Power, approx.	2.5	2.7	3.25	kilowatts
R-F Load Resistance	675	555	565	ohms
Power Output, approx.	60	90	150	kilowatts

Series Regulator Operation

Maximum Ratings, Absolute Values

D-C Plate Voltage	40,000	volts
Peak Positive Plate Voltage	45,000	volts
D-C Grid Voltage	-5,000	volts
D-C Plate Current	25	amperes
Grid Dissipation	3.0	kilowatts
Plate Dissipation	90	kilowatts

Hard Tube Modulator

Maximum Ratings, Absolute Values

D-C Plate Voltage	40,000	40,000#	volts
Peak Positive Plate Voltage	45,000	45,000#	volts
D-C Grid Voltage	-5,000	-5,000#	volts
Peak Positive Grid Voltage	4,000	4,000#	volts
Pulse Cathode Current	200	270#	amperes
Grid Dissipation	3.0	3.0#	kilowatts
Duty Factor	.06	.06#	
Pulse Length	2000	2000#	μseconds
Plate Dissipation	90	90#	kilowatts

These ratings apply only under elevated filament temperatures as specified below:

	Min.	Bogey	Max.	
Filament Voltage	13.2	13.6	14.0	volts
Filament Emission E_f = 13.2 v. $E_p = E_g$ = 3 kv	250			amperes

Radio-Frequency Power Amplifier and Oscillator - Pulse Operation

Maximum Ratings, Absolute Values

D-C Plate Voltage		22,000	volts
D-C Grid Voltage		-5,000	volts
Peak Cathode Current	270 ***	200	amperes
Duty Cycle		.06	
Grid Dissipation		3	kilowatts
Pulse Length		2,000	μseconds

Typical Operation

D-C Plate Voltage		21,000	volts
D-C Grid Voltage		-1,100	volts
D-C Plate Current		2	amperes
Duty Cycle		.03	
Output Crest Value		2,000	kilovolt amps

***See note on elevated filament temperatures on sheet 4.

MAXIMUM FREQUENCY RATINGS

Maximum ratings apply up to 2 mc except as noted. The tube may be operated at higher frequencies provided the maximum values of plate voltage and power input are reduced according to the tabulation below.

Frequency	2	10	15	megacycles
Max. Rated Plate Voltage & Plate Input:				
Class B	100	100	90	per cent
Class C	100	90	70	per cent

Additional information for specific applications can be obtained from the:

Electron Tube Applications Section
ITT ELECTRON TUBE DIVISION
P.O. Box 104
Clifton, New Jersey

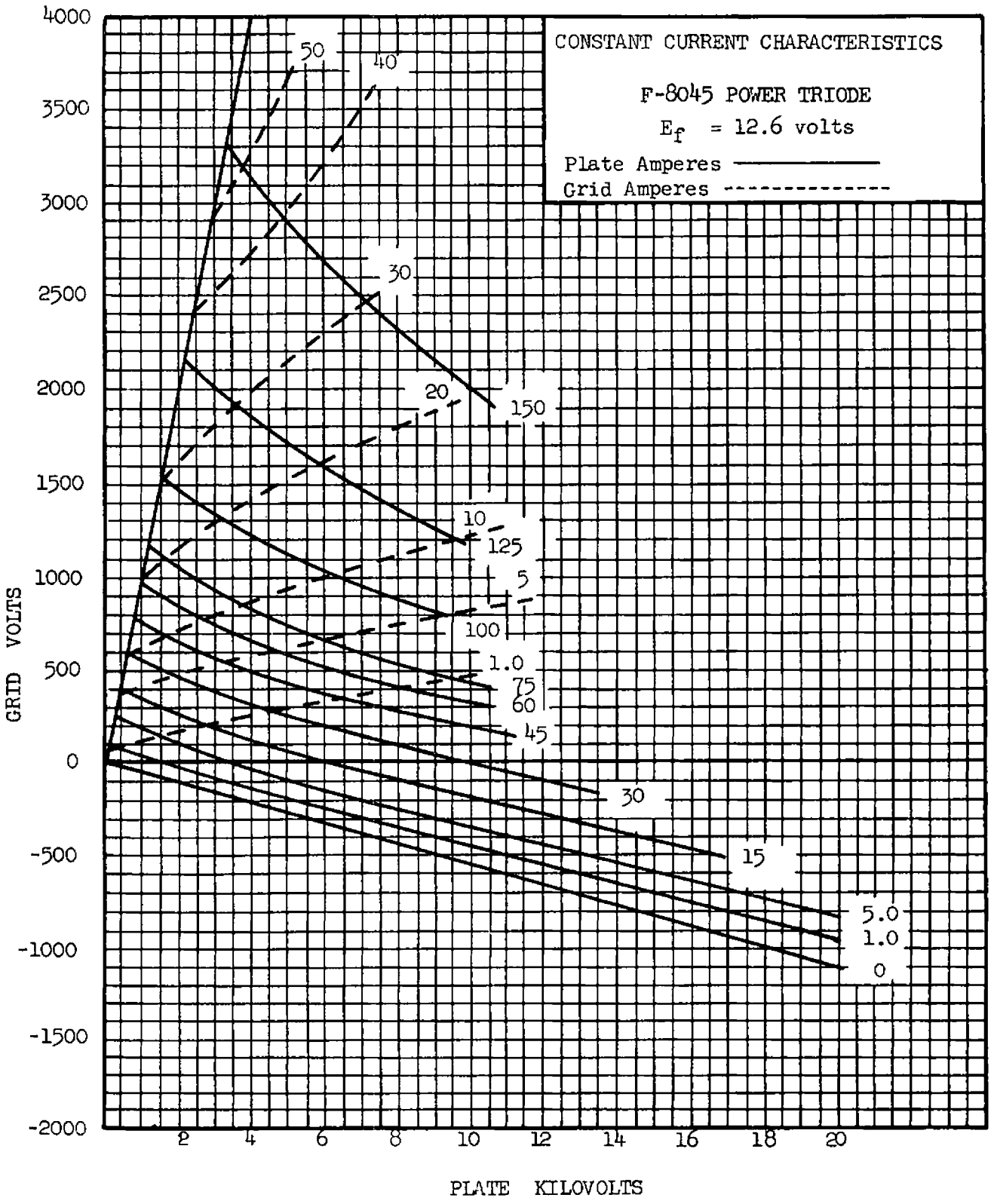
CONSTANT CURRENT CHARACTERISTICS
F-8045 POWER TRIODE
E_f = 12.6 volts
Plate Amperes
Grid Amperes
GRID VOLTS
PLATE KILOVOLTS
4000
3500
3000
2500
2000
1500
1000
500
0
-500
-1000
-1500
-2000
2
4
6
8
10
12
14
16
18
20
50
40
30
20
150
10
125
5
100
1.0
75
60
45
30
15
5.0
1.0
0

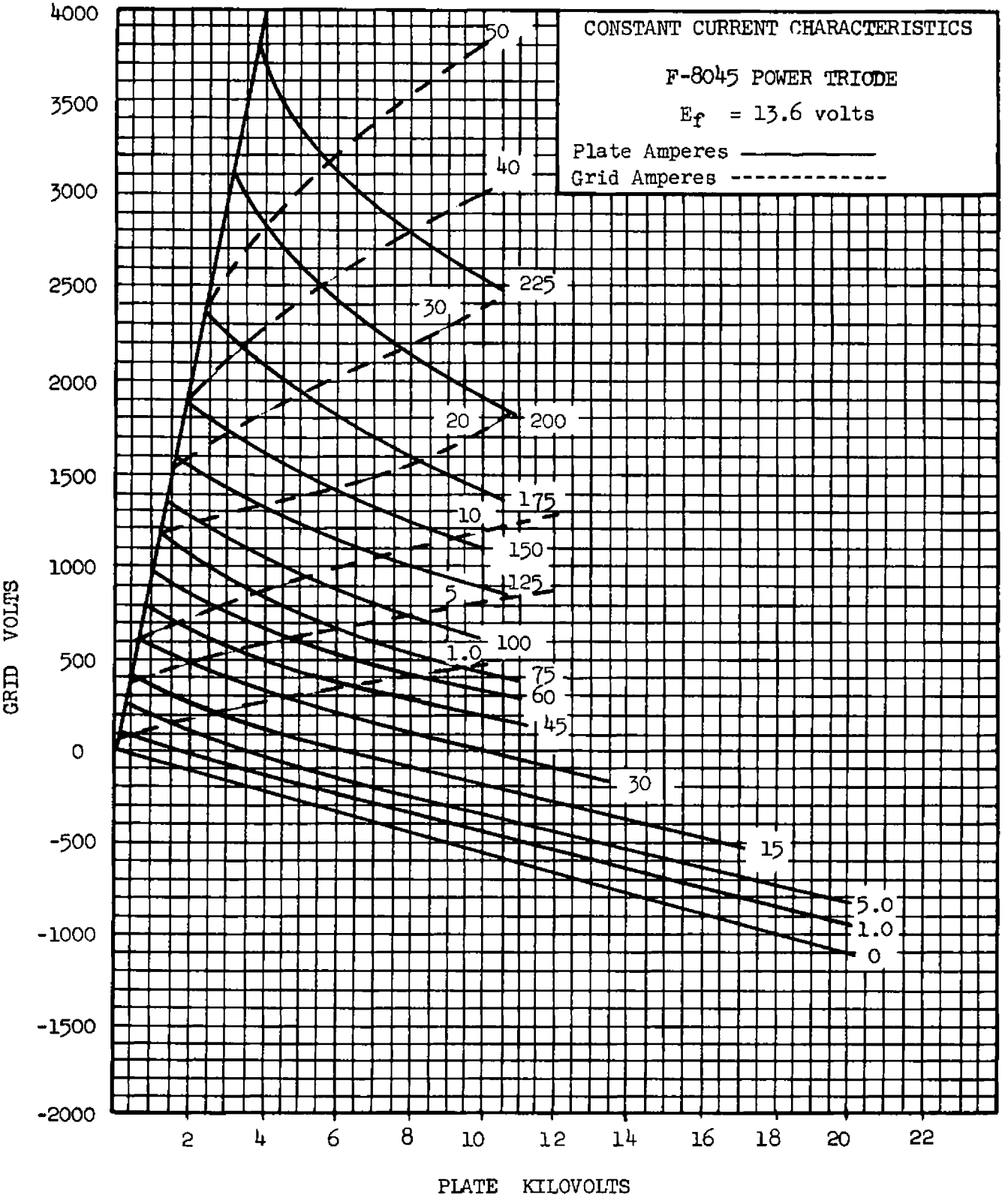
CONSTANT CURRENT CHARACTERISTICS
F-8045 POWER TRIODE
E_f = 13.6 volts
Plate Amperes ————
Grid Amperes ----------
GRID VOLTS
4000
3500
3000
2500
2000
1500
1000
500
0
-500
-1000
-1500
-2000
2
4
6
8
10
12
14
16
18
20
22
PLATE KILOVOLTS
50
40
225
30
200
20
175
10
150
125
5
100
1.0
75
60
45
30
15
5.0
1.0
0

TERMINALS

Black - Grid
Yellow - Fil. 1
Red - Fil. 2

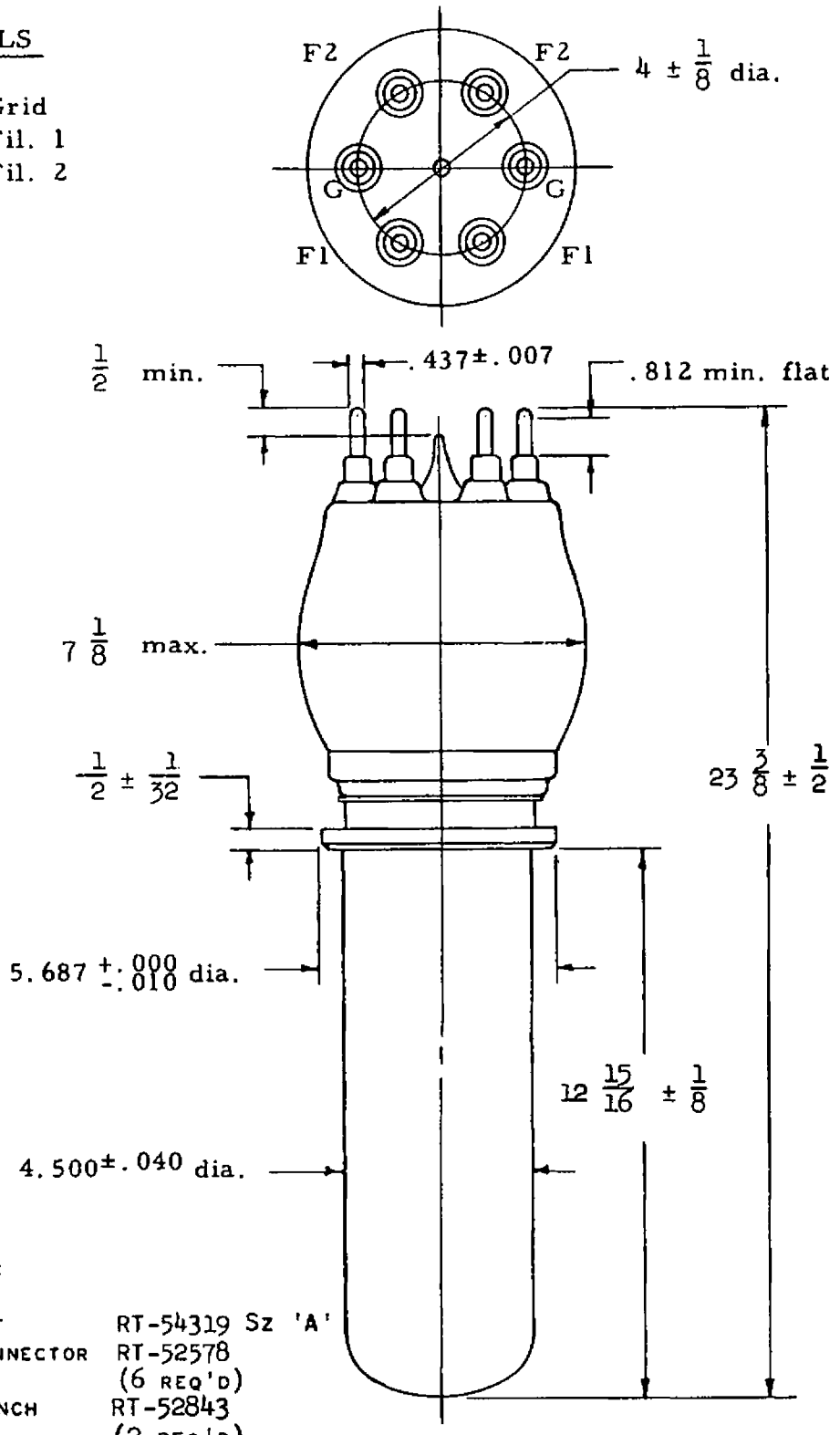

ACCESSORIES:

WATER JACKET	RT-54319 Sz 'A'
TERMINAL CONNECTOR	RT-52578 (6 REQ'D)
SPANNER WRENCH	RT-52843 (2 REQ'D)
O-RING	RT-53836

OUTLINE

F-8045 POWER TRIODE

engineering TUBE DATA

F-8109 *
F-8110
POWER
DIODES

from JEDEC release #4005,
Dec. 3, 1962

ITT Components Division

DESCRIPTION

The F-8109 and F-8110 are diodes designed for rectifier service or in special applications in shunting or charging circuits. The exceptionally rugged construction, free of spring tensioning devices and fragile elements, make these types adaptable to a wide range of uses. The cathode is a thoriated tungsten filament of mesh construction.

The F-8109 has a water-cooled, heavy-wall anode capable of 20 kw dissipation. The F-8110 has a forced air-cooled, heavy-wall anode capable of 10 kw dissipation.

ELECTRICAL

Filament Voltage	7.5 volts
Filament Current	210 amperes
Filament Starting Current Full rated filament voltage may be safely applied to the cold filament	
Filament Heating Time, minimum	15 seconds

Maximum Ratings	Shunt	Charging	Rectifier
Max. Peak Inverse Voltage	60	60	60 kv
Max. Peak Plate Current	150	16 rms	36 amperes
Max. Average Plate Current	--	--	12 amperes

Inter-Electrode Capacitance 21 μμf

* Formerly our D-1033A and B.

8-62

ITT ELECTRON TUBE DEPARTMENT
COMPONENTS DIVISION
INTERNATIONAL TELEPHONE AND TELEGRAPH CORPORATION
P. O. BOX 412, CLIFTON, NEW JERSEY

MECHANICAL

Mounting Position				Vertical, anode up or down			
Maximum Glass & Seal Temperature					180°		C.
Type of Cooling		F-8109			F-8110		
Plate Dissipation	20	16	12	10.0	8.0	6.0	kw
Water Flow	7.2	4.6	3.3	---	---	---	
Max. Outgoing Water Temperature		70°			---		C.
Air Flow	---	---	---	750	525	350	cfm
Static Air Pressure	---	---	---	2.0	1.0	.45	in. of water
Max. Incoming Air Temperature		---			45°		C.
Net Weight, approx.		8			45		lbs.

Additional information for specific applications can be obtained from:

Electron Tube Applications Section
ITT Components Division
P.O. Box 412
Clifton, New Jersey

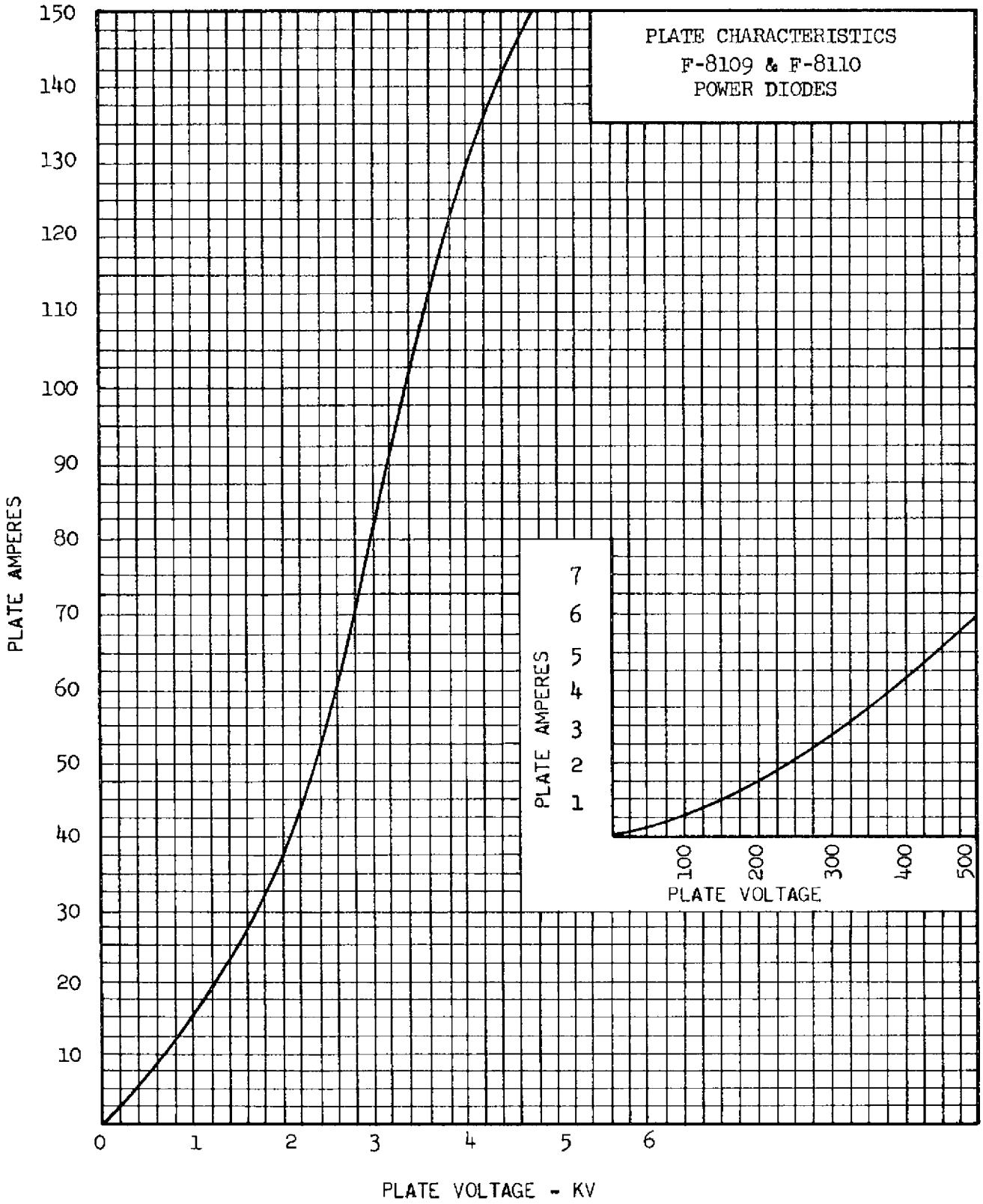
PLATE CHARACTERISTICS
F-8109 & F-8110
POWER DIODES
PLATE AMPERES
150
140
130
120
110
100
90
80
70
60
50
40
30
20
10
0
1
2
3
4
5
6
PLATE VOLTAGE - KV
PLATE AMPERES
7
6
5
4
3
2
1
100
200
300
400
500
PLATE VOLTAGE

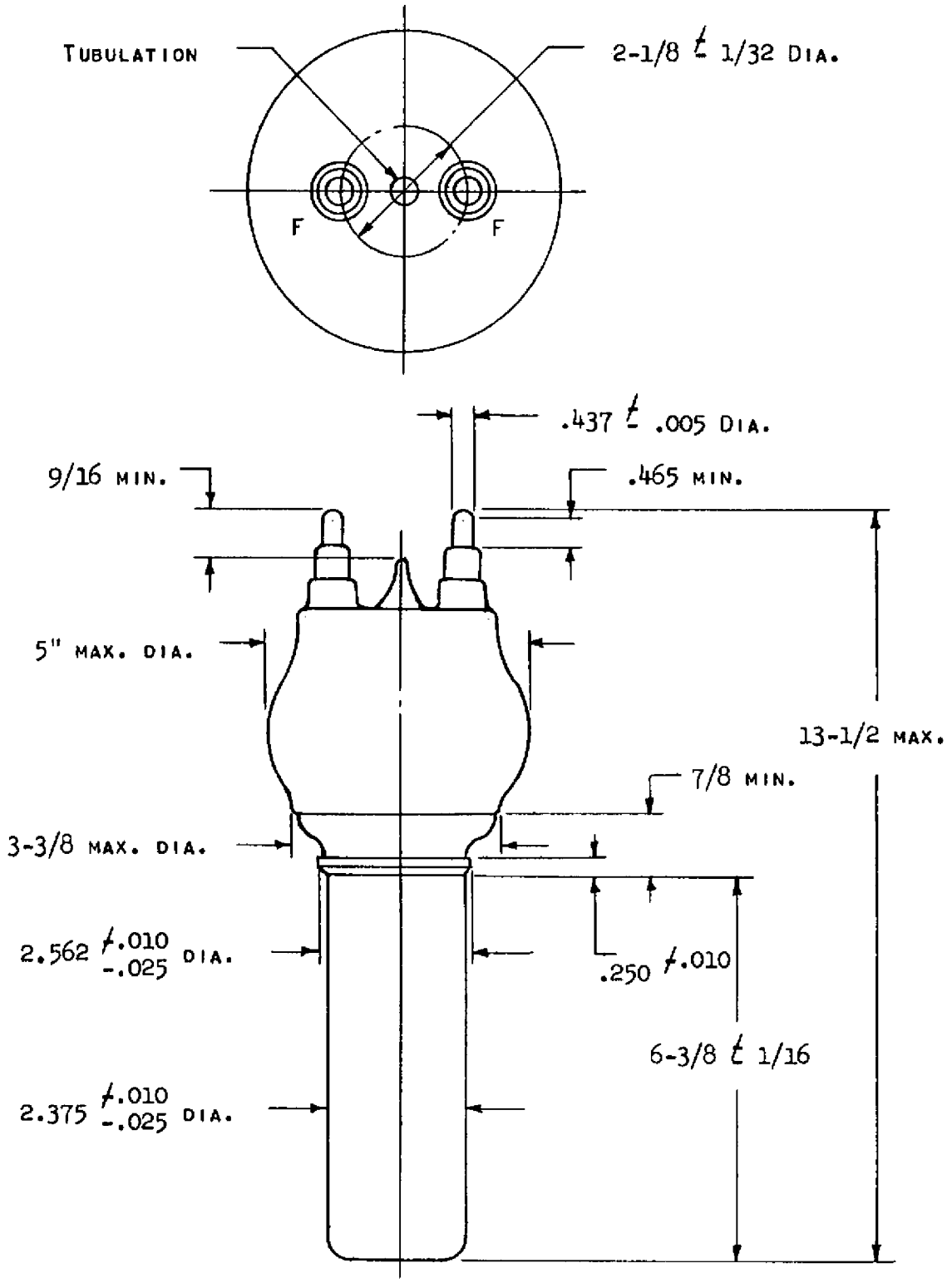

ACCESSORIES:

TERMINAL CONNECTOR	-	RT-52578, 2 REQUIRED
SPANNER WRENCH	-	RT-52843, 2 REQUIRED
WATER JACKET	-	RT-53221 SIZE C
O-RING	-	RT-53836 SIZE B-B

OUTLINE
F-8109 POWER DIODE

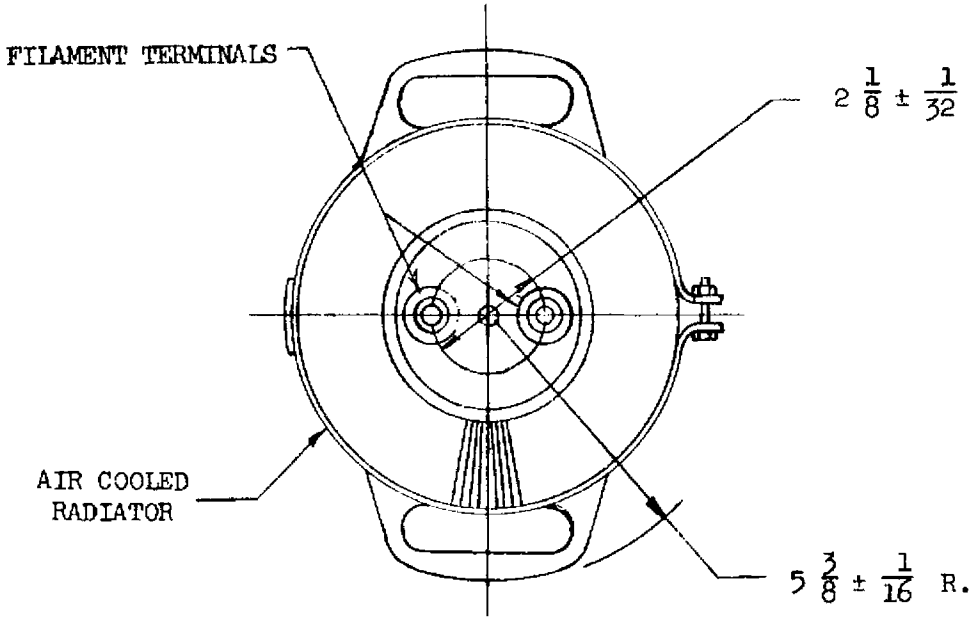

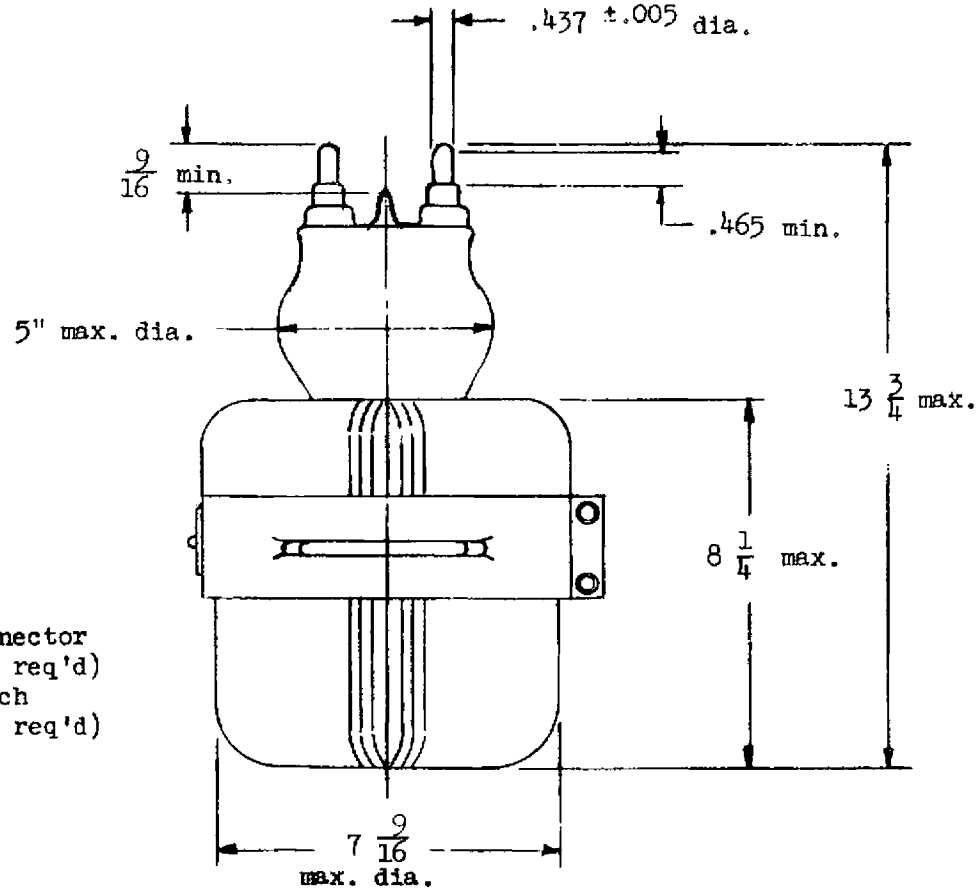

ACCESSORIES

Air Jacket
RT-55240
Terminal Connector
RT-52578 (2 req'd)
Spanner Wrench
RT-52843 (2 req'd)

OUTLINE

F-8110 POWER DIODE

engineering TUBE DATA

F-8148 *
POWER TRIODE

from JEDEC release #4027,
Dec. 17, 1962

ITT Components Division

DESCRIPTION:

THE F-8148 IS A THREE ELECTRODE TUBE DESIGNED FOR USE AS A MODULATOR, ITS ELECTRICAL CHARACTERISTICS MAKING IT PARTICULARLY SUITABLE FOR CLASS AB_1 CIRCUITS. THE ANODE IS WATER COOLED AND IS CAPABLE OF DISSIPATING 40 KW DURING CONTINUOUS COMMERCIAL SERVICE. THE CATHODE IS A THORIATED TUNGSTEN FILAMENT OF MESH CONSTRUCTION AND MAY BE OPERATED ON D-C OR SINGLE PHASE A-C. MAXIMUM RATINGS APPLY FOR AUDIO FREQUENCY USE ONLY.

ELECTRICAL:

FILAMENT VOLTAGE	7.0	VOLTS
FILAMENT CURRENT	260	AMPERES
FILAMENT STARTING CURRENT	1000	AMPERES
AMPLIFICATION FACTOR		
E_C = -450 VOLTS i_B = 5.0 AMPERES	5.5	
DIRECT INTER-ELECTRODE CAPACITANCE		
GRID-PLATE	88	UUF
GRID-FILAMENT	70	UUF
PLATE-FILAMENT	12	UUF
FILAMENT COLD RESISTANCE	.0035	Ω

MECHANICAL:

MOUNTING POSITION			VERTICAL ANODE, UP OR DOWN	
TYPE OF COOLING			FORCED AIR AND WATER	
MAXIMUM GLASS & SEAL TEMPERATURE (NOTE 1)			180°	C
PLATE DISSIPATION	40	30	20	KW
WATER FLOW (NOTE 2)	30	22	16	GPM
WATER JACKET PRESSURE DROP	10	6	3	PSI
WEIGHT, APPROXIMATE			14	POUNDS

NOTE 1:

AIR FLOW UP TO 50 CFM ON TO THE DISH CENTER MAY BE REQUIRED TO HOLD THE TEMPERATURE OF THE DISH AND SEALS BELOW 180°C. A TEMPERATURE SENSITIVE LACQUER MANUFACTURED BY THE TEMPIL CORPORATION, 132 W. 22ND STREET, NEW YORK 11, NEW YORK IS CONVENIENT FOR THIS MEASUREMENT.

NOTE 2:

USING WATER JACKET RT-54319, TYPE C.

* FORMERLY D-1035

ITT ELECTRON TUBE DEPARTMENT
COMPONENTS DIVISION
INTERNATIONAL TELEPHONE AND TELEGRAPH CORPORATION
P.O. BOX 312 CLIFTON, NEW JERSEY

MAXIMUM RATINGS AND TYPICAL OPERATING CONDITIONS:

AUDIO-FREQUENCY POWER AMPLIFIER AND MODULATOR - CLASS AB_1

MAXIMUM RATINGS, ABSOLUTE VALUES

DC PLATE VOLTAGE	8	KV
MAXIMUM SIGNAL DC PLATE CURRENT (NOTE 3)	10	AMPERES
MAXIMUM SIGNAL PLATE INPUT (NOTE 3)	80	KW
PLATE DISSIPATION (NOTE 3)	40	KW
GRID DISSIPATION	800	WATTS

TYPICAL OPERATION
(UNLESS OTHERWISE SPECIFIED, VALUES ARE FOR TWO TUBES)

DC PLATE VOLTAGE	6000	8000	VOLTS
DC GRID VOLTAGE, APPROX. (NOTE 4)	-1200	-1600	VOLTS
PEAK A-F GRID-TO-GRID VOLTAGE	2300	3100	VOLTS
ZERO SIGNAL D-C PLATE CURRENT	.5	.5	AMPERES
MAXIMUM SIGNAL D-C PLATE CURRENT	12	12	AMPERES
PEAK A-F PLATE-TO-PLATE VOLTAGE	6700	11000	VOLTS
EFFECTIVE LOAD RESISTANCE PLATE-TO-PLATE	710	1170	OHMS
MAXIMUM SIGNAL DRIVING POWER	0	0	WATTS
MAXIMUM SIGNAL POWER OUT	30	50	KW

NOTE 3:

AVERAGED OVER ANY AUDIO FREQUENCY CYCLE OF SINE-WAVE FORM.

NOTE 4:

ADJUST TO STATED ZERO SIGNAL DC PLATE CURRENT. EFFECTIVE GRID CIRCUIT RESISTANCE NOT TO EXCEED 200,000 OHMS.

MODULATOR TUBE-PULSE OPERATION:

MAXIMUM RATING, ABSOLUTE VALUES

DC PLATE VOLTAGE		20	KV
PEAK POSITIVE VOLTAGE (INSTANTANEOUS)		25	KV
DC GRID VOLTAGE		-6	KV
PEAK POSITIVE GRID VOLTAGE		2.5	KV
PULSE CATHODE CURRENT	160*	100	AMPERES
GRID DISSIPATION		800	WATTS
DUTY FACTOR		.01	
PULSE LENGTH		2000	uSEC.

* THIS RATING APPLIES ONLY UNDER ELEVATED FILAMENT TEMPERATURE AS SPECIFIED BY E_F = 7.6 VOLTS. REDUCED LIFE WILL RESULT AS A CONSEQUENCE OF CONTINUED OPERATION AT THIS TEMPERATURE.

Typical Operation

DC-Plate Voltage	14	17	KV
Pulse Plate Current	68	80	Amperes
DC Grid Voltage	-3300	-4200	Volts
Pulse Grid Current	0	12	Amperes
Pulse Positive Grid Voltage	0	1000	Volts
Pulse Grid Drive Power	0	12	KW
Plate Output Voltage	7.5	14	KW
Pulse Output Power	510	1200	KW

Additional information for specific applications can be obtained from the

Electron Tube Applications Section
ITT Components Division
Post Office Box 412
Clifton, New Jersey

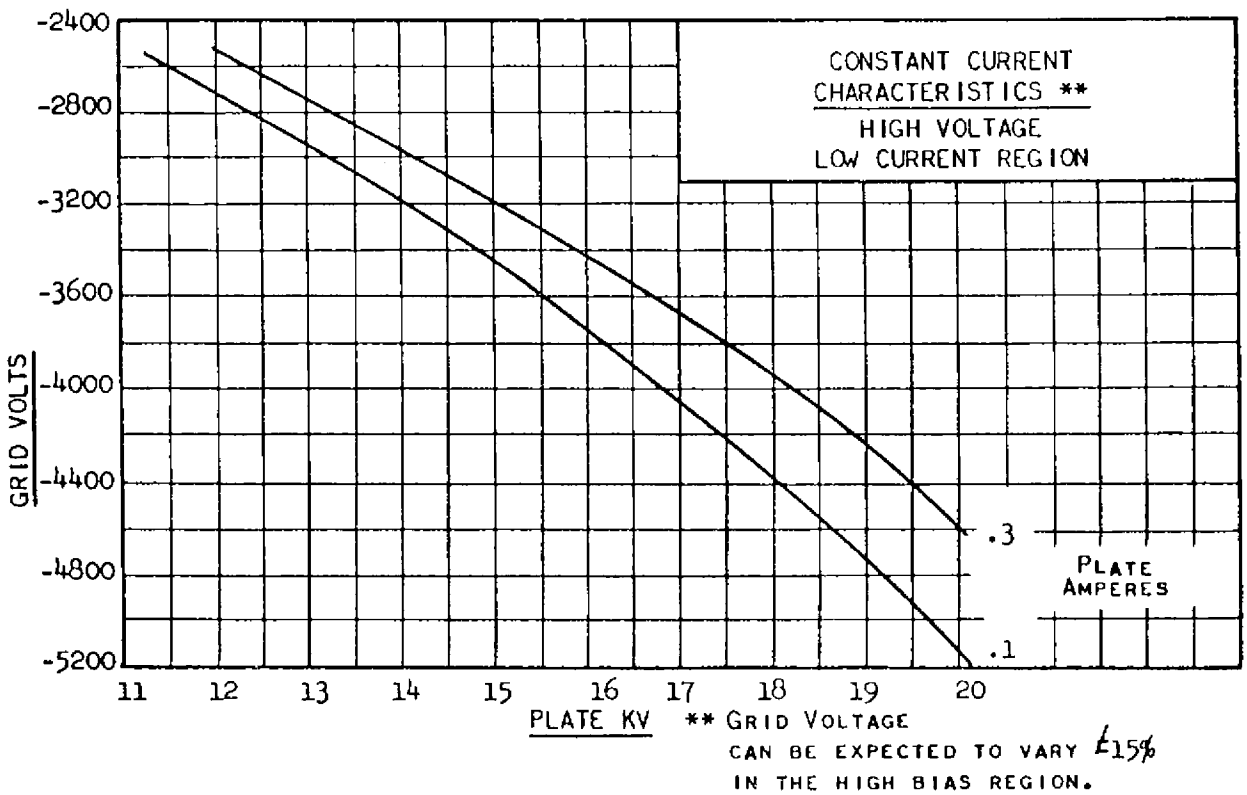

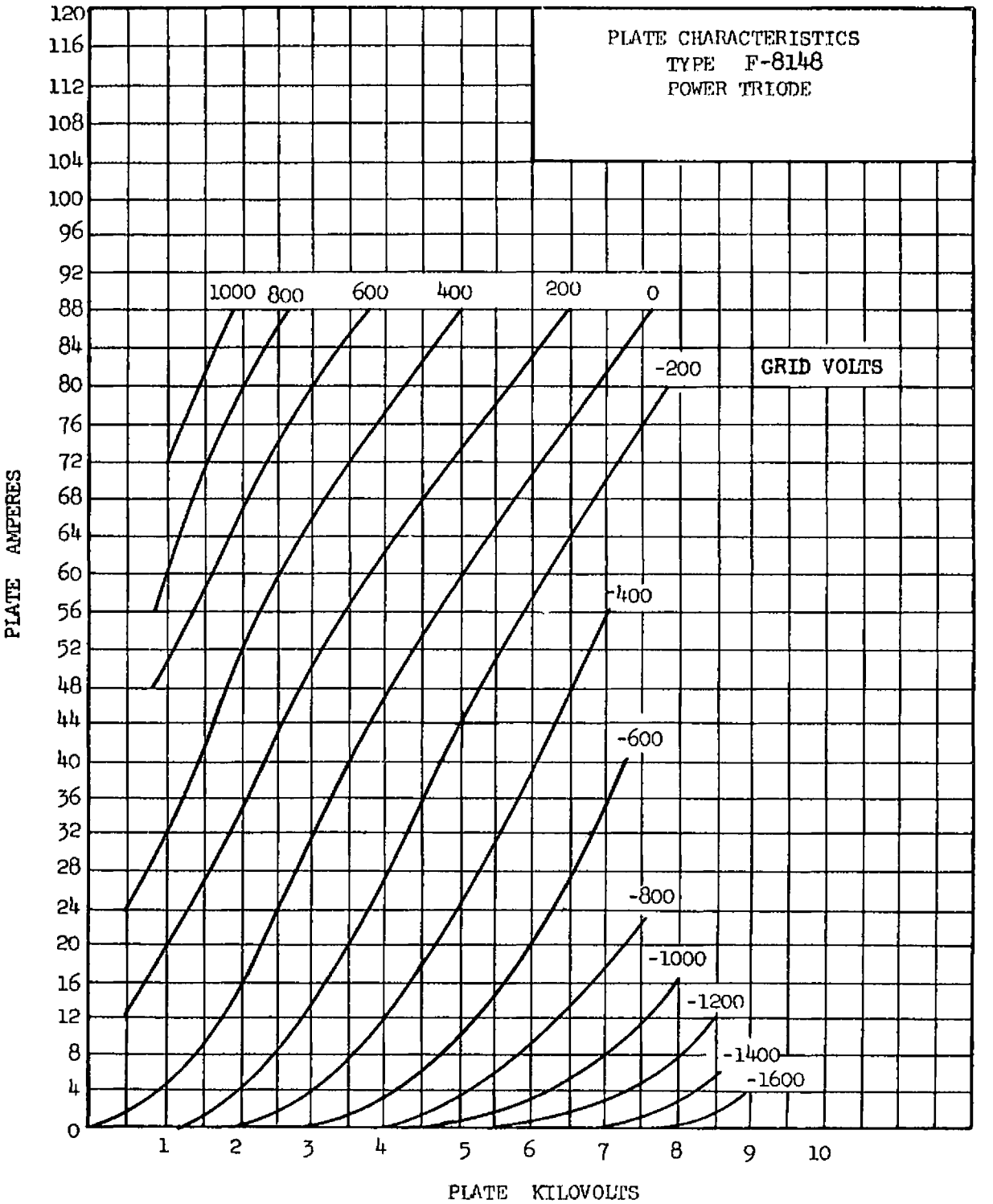
PLATE CHARACTERISTICS
TYPE F-8148
POWER TRIODE
GRID VOLTS
1000
800
600
400
200
0
-200
-400
-600
-800
-1000
-1200
-1400
-1600
PLATE AMPERES
PLATE KILOVOLTS
0
4
8
12
16
20
24
28
32
36
40
44
48
52
56
60
64
68
72
76
80
84
88
92
96
100
104
108
112
116
120
1
2
3
4
5
6
7
8
9
10

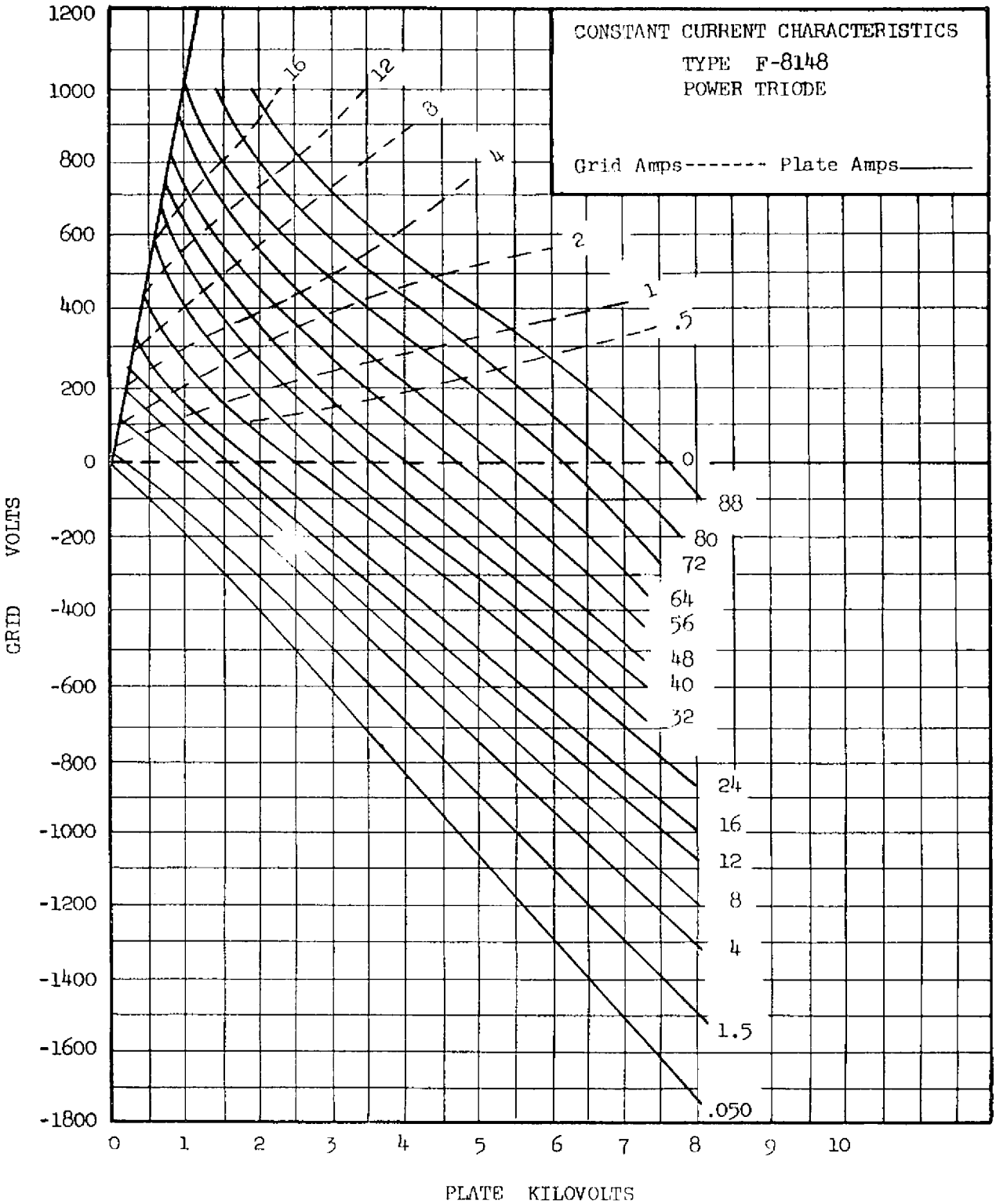
CONSTANT CURRENT CHARACTERISTICS
TYPE F-8148
POWER TRIODE
Grid Amps------- Plate Amps_____
GRID VOLTS
PLATE KILOVOLTS
1200
1000
800
600
400
200
0
-200
-400
-600
-800
-1000
-1200
-1400
-1600
-1800
0
1
2
3
4
5
6
7
8
9
10
16
12
8
4
2
1
.5
0
88
80
72
64
56
48
40
32
24
16
12
8
4
1.5
.050

F-8148
POWER
TRIODE

TERMINALS

Black - Grid
Yellow - Fil. 1
Red - Fil. 2

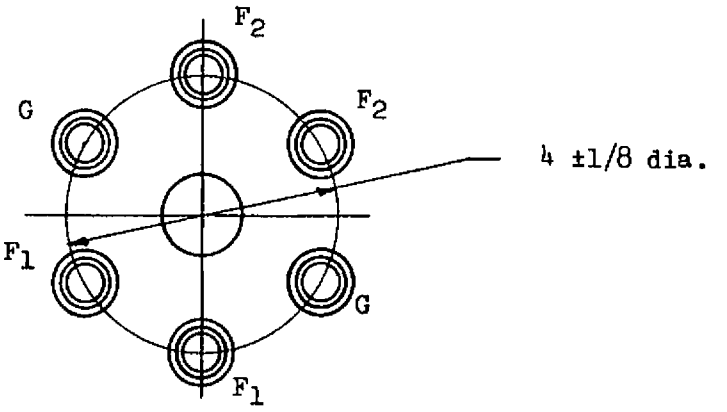

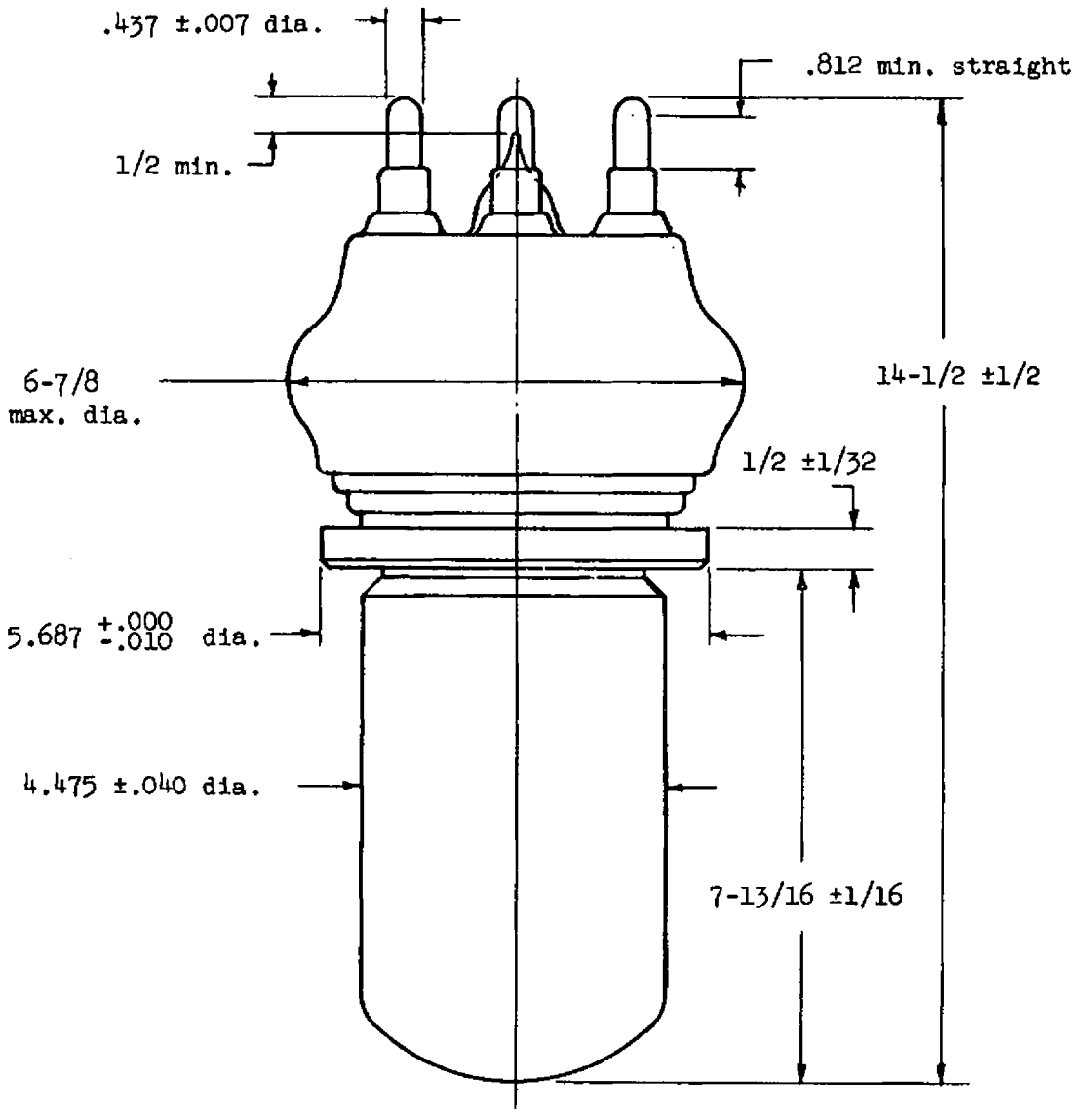

OUTLINE

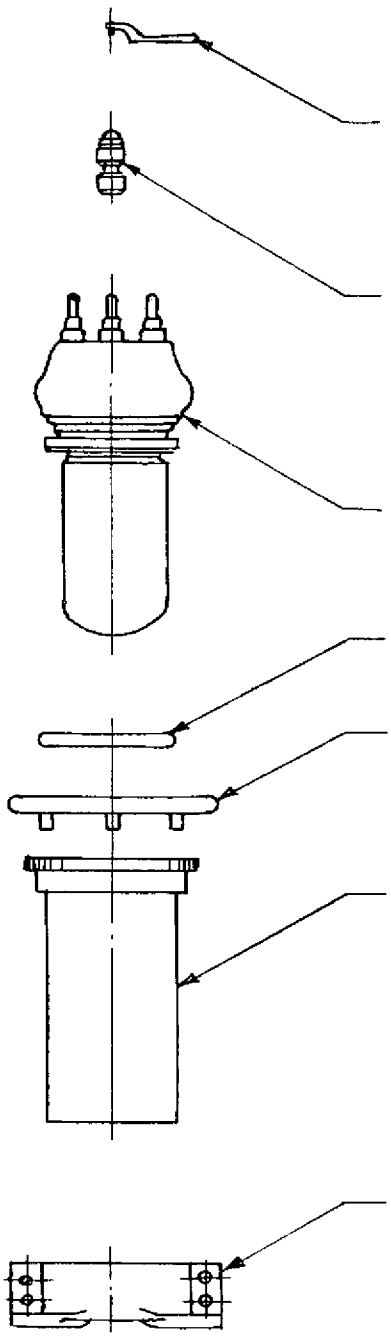

Spanner Wrench
RT-52843-1 (2 req'd)
(Not to scale)

Terminal Connector Assy.
RT-52578-1 (6 req'd)

Tube Type
F-8148

'O' Ring
RT-53836-1

Corona Ring Assy.
RT-54002-1

Water Jacket Helix
RT-54319-12
Type "C"

Mounting Clamp
RT-53492-1

ACCESSORIES

ITT ELECTRON TUBE DIVISION
CLIFTON, NEW JERSEY
INTERNATIONAL TELEPHONE AND TELEGRAPH CORPORATION

KUTHE
8301/KU-275

TENTATIVE

SUPER-POWER CERAMIC HYDROGEN THYRATRON

DESCRIPTION:

The 8301 is a 100 megawatt ceramic hydrogen thyratron. The anode and grid structures may be liquid cooled to permit operation at an average output power level of 200 kilowatts. Special features of the 8301 include a balanced capacity gradient grid design for optimum operation and a maximum planar cathode area for long life. This tube was previously designated by the type number KU-275.

ELECTRICAL DATA, GENERAL	Nom.	Min.	Max.	
Heater Voltage	6.3	6.0	6.6	Volts AC
Heater Current (At 6.3 Volts)		40	100	Amperes
Heater (Note 1)				
Reservoir Voltage (Note 2)		3.5	6.0	Volts
Reservoir Current at 5.5 Volts		20.0	60.0	Amperes
Minimum Heating Time			15	Minutes

MECHANICAL DATA, GENERAL		
Mounting Position	Vertical Only, Base Down	
Base (Per Outline)		Flange
Cooling (Note 3)		
Net Weight	41	Pounds
Dimensions (See Outline Drawing)	Seated Height: 16	Inches

RATINGS:

Max. Peak Anode Voltage, Forward	50.0	Kilovolts
Max. Peak Anode Voltage, Inverse (Note 4)	50.0	Kilovolts
Min. Anode Supply Voltage (Note 5)	5.0	Kilovolts
Max. Peak Anode Current	4000	Amperes
Max. Average Anode Current	8.0	Amperes DC
Max. RMS Anode Current (Note 6)	125	Amperes AC
Max. Epy X ib X prr	400×10^9	
Max. Anode Current Rate of Rise	10,000	Amps./μ Sec.
Peak Trigger Voltage (Note 7)		
Ambient Temperature	-55° to +90°	C

Note 1:

Cathode connected to center of cathode heater.

Note 2:

Reservoir voltage is marked on the base of each 8301. This is the correct voltage for one typical operating condition but is not the optimum value for all types of operation. This value may be used initially in new applications and the optimum value may then be obtained by exploring the range of voltage on either side of that marked on the tube. Excess reservoir voltage will result in a failure of the thyratron to deionize between pulses (continuous conduction). Insufficient reservoir voltage will result in excess anode dissipation as indicated by heating of the anode. The anode dissipation must not be permitted to exceed 2000 watts as measured in the cooling water. A useful formula for this determination follows:

$$P = 264\ QW\ (T_2 - T_1)$$

P	=	Power in Watts
QW	=	Flow in Gallons/Minute
$T_2 - T_1$	=	Outlet and Inlet Water Temperatures in Degrees Kelvin, Respectively

The optimum reservoir voltage is the midpoint between these two extremes. In certain applications it may be necessary to provide a regulated source to assure operation within the permissible range of reservoir voltages.

Note 3:

Cooling of the grid and anode is normally required. This may be accomplished by liquid coolants circulated through the cooling chambers. A minimum flow of 1 gallon per minute of water is required. The water inlet temperature shall not be less than 5°C, nor the outlet temperature higher than 95°C.

Note 4:

During the first 25 microseconds after conduction, the peak inverse anode voltage shall not exceed 10 KV.

Note 5:

A resistance divider of 40 megohms shall be connected between anode and cathode. The center tap of this divider will be connected to the second or gradient grid of the 8301. It is recommended that this arrangement be employed whether low voltage operation is required or not. This divider is a necessity for keyed grid operation.

Note 6:

The root mean square anode current shall be computed as the square root of the product of peak current and the average current.

Note 7:

The pulse produced by the driver circuit shall have the following characteristics when viewed at the 8301 socket with the tube removed.

A.	Amplitude	2000 - 4000 Volts
B.	Duration	2 Microseconds (At 70% Points)
C.	Time of Rise	0.35 Microseconds (Min.)
D.	Impedance	10 - 25 Ohms

The limits of anode time delay and anode time jitter are based on the minimum trigger. Using the highest permissible trigger voltage and lowest trigger source impedance materially reduces these values below the limits specified.

Additional information for specific applications can be obtained from the -

Electron Tube Applications Section
ITT Electron Tube Division
Post Office Box 104
Clifton, New Jersey

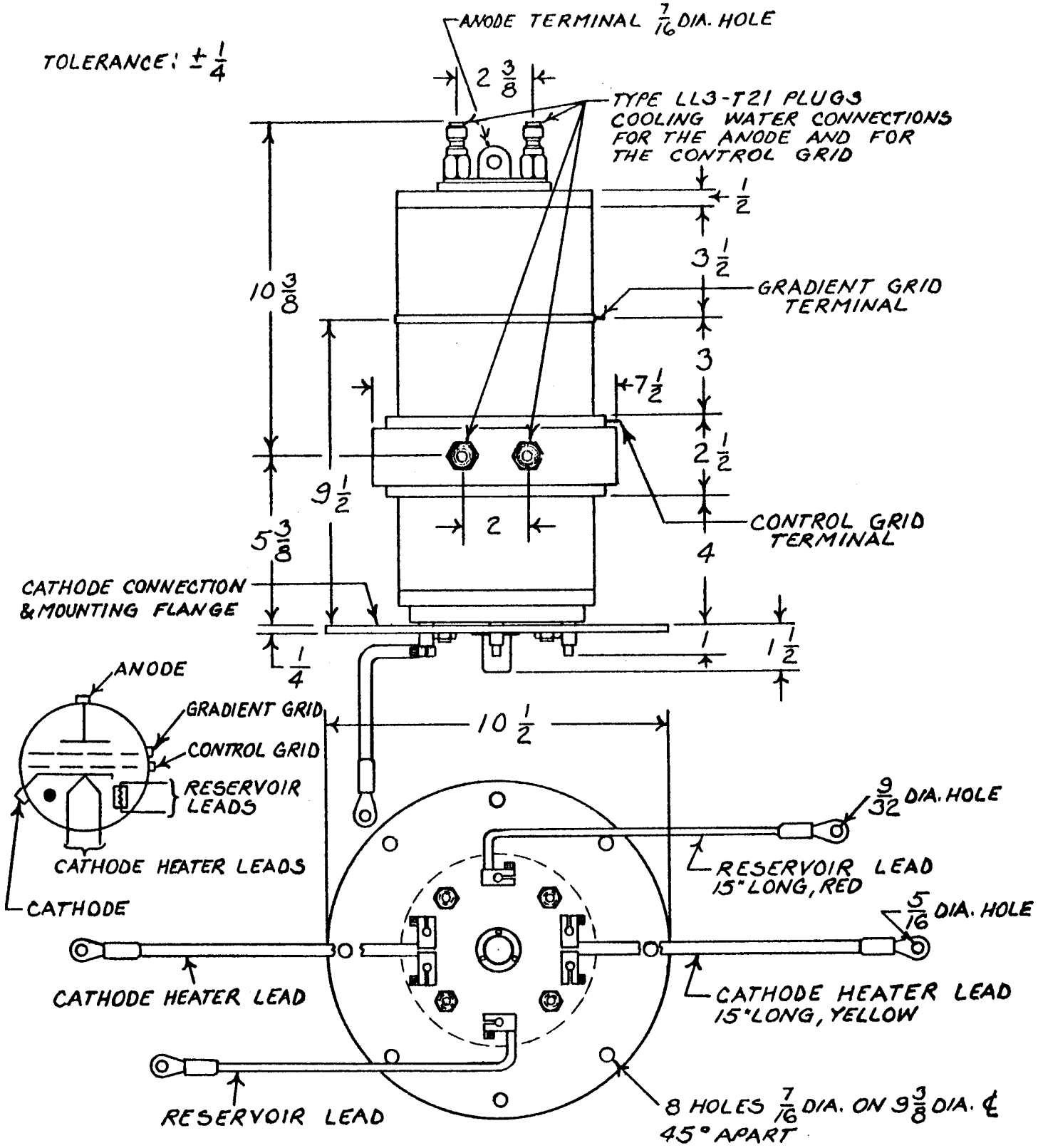

OUTLINE 8301/KU275

ELECTRON TUBE DIVISION
P.O. Box 100
Easton, Pennsylvania 18042
Telephone 215 252-7331

8354

CERAMIC HYDROGEN THYRATRON

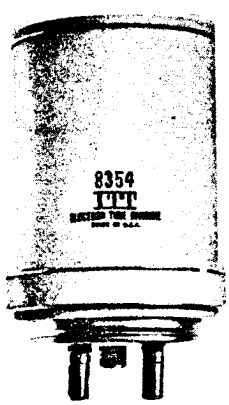

DESCRIPTION

The 8354 is a ceramic thyratron capable of 12.5 megawatts peak power output and 27.5 kilowatts average power output. The high average power capability is produced through a combination of the unique external anode design, the indirectly heated cathode, and the internal reservoir. The metal-ceramic design of the 8354 offers increased reliability when operated under extreme environmental conditions.

GENERAL CHARACTERISTICS

ELECTRICAL DATA	Nom.	Min.	Max.	
Heater Voltage	6.3	5.8	6.8	Volts AC
Heater Current (at 6.3 volts)		11.0	18.0	Amperes
Heater (Note 1)				
Reservoir Voltage (Note 2)	6.3	5.8	6.8	Volts
Reservoir Current at 6.3 Volts		3.0	8.0	Amperes
Minimum Heating Time		5		Minutes

MECHANICAL DATA		
Mounting Position	Any	
Mounting	MT-4	
Cooling (Note 3)		
Dimensions (See Outline Drawing)		

MAXIMUM RATINGS		
Max. Peak Anode Voltage, Forward	25	Kilovolts
Max. Peak Anode Voltage, Inverse (Note 5)	25	Kilovolts
Min. Anode Supply Voltage	1500	Volts DC
Max. Peak Anode Current	1000	Amperes
Max. Average Anode Current	2.2	Amperes
Max. RMS Anode Current (Note 6)	40.0	Amperes AC
Max. epy x ib x prr	25.0×10^9	
Max. Anode Current Rate of Rise	5000	Amps./u sec
Peak Trigger Voltage (Note 7)		
Max. Peak Inverse Trigger Voltage	400	Volts
Max. Anode Delay Time (Note 8)	0.5	Microsecond
Max. Anode Delay Time Drift	0.15	Microsecond
Max. Time Jitter (Note 9)	0.005	Microsecond
Ambient Temperature	-55° to $+85^\circ$	C

NOTE 1 See Outline drawing.

NOTE 2 The optimum reservoir voltage for operation in accordance with operation (1) conditions is 6.3 Vac and must be held to within +7.5%. Applications involving other operating conditions may necessitate the redetermination of the optimem reservoir voltage. Operation (1) conditions (24 KV—580 A—2.4 us—2.2 Adc).

8354

NOTE 3 There shall be no artificial anode or envelope cooling directed onto the tube. Blowers or anode radiators shall not be used.

NOTE 4 Absolute values should not normally be allowed to occur simultaneously.

NOTE 5 In pulsed operation, the peak inverse voltage, exclusive of a spike of .05 us maximum duration, shall not exceed 5.0 KV during the first 25 us following the anode pulse.

NOTE 6 The root mean square anode current shall be computed as the square root of the product of peak current and the average current.

NOTE 7 The driver pulse, measured at the tube socket with thratron grid disconnected: 500 volts minimum, 1500 volts maximum; tr = 0.35 us maximum; grid pulse duration 2.0 us minimum. Impedance of drive circuit 50 to 200 ohms.

NOTE 8 The time of anode delay is measured between the 26 percent point on the rising portion of the unloaded grid voltage pulse and the point at which anode conduction first evidences itself on the loaded grid pulse.

NOTE 9 Time jitter is measured at the 50 percent point on the anode current pulse.

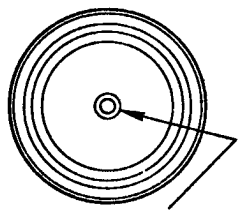

1/4 x 20 UNC-2A x 5/8 MIN.
THREAD LENGTH
ANODE CONNECTOR

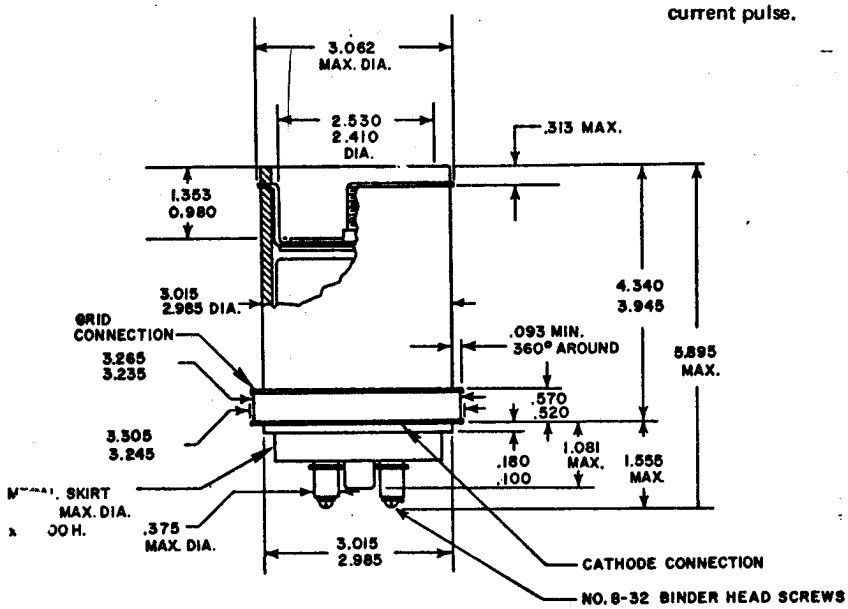

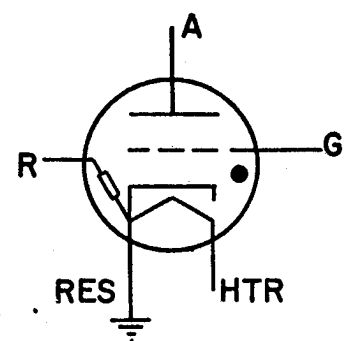

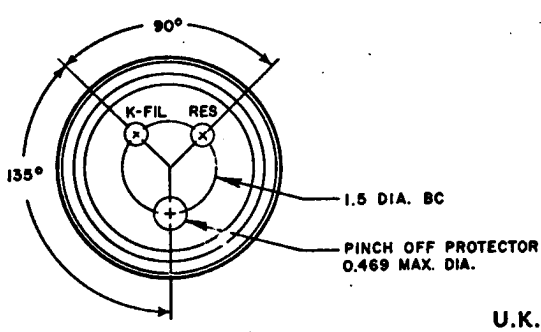

U.K. technical and sales enquiries should be directed to :

ITT Components Group Europe
Valve Product Division
Standard Telephone and Cables Ltd
Brixham Road, Paignton Devon
Telephone : Paignton 50762 (STD 0803-). Telex 42830

ELECTRON TUBE DIVISION ITT
P.O. Box 100 Easton, Pennsylvania 18042

ITT ELECTRON TUBE DIVISION
BOX 100 EASTON, PA. 18043
INTERNATIONAL TELEPHONE AND TELEGRAPH CORPORATION

KUTHE
8424 *
HYDROGEN
THYRATRON

DESCRIPTION:

THE 8424 IS A UNIPOTENTIAL CATHODE, 3 ELEMENT HYDROGEN FILLED THYRATRON DESIGNED FOR NETWORK DISCHARGE SERVICE. IN SUCH SERVICE, IT IS SUITABLE FOR PRODUCING PULSE OUTPUTS OF MORE THAN 1.5 MEGAWATTS AT AN AVERAGE POWER LEVEL OF MORE THAN 1.2 KW.

THE 8424 IS EQUIPPED WITH RESERVOIR FOR LONG STABLE LIFE AND IS ESPECIALLY ADAPTED TO OPERATION AT HIGH PULSE REPETITION RATES.

ELECTRICAL DATA, GENERAL:	NOM.	MIN.	MAX.	
HEATER VOLTAGE	6.3	5.9	6.7	VOLTS A.C.
HEATER CURRENT (AT 6.3 VOLTS)		9.6	11.6	AMPERES
MINIMUM HEATING TIME			5	MINUTES

MECHANICAL DATA, GENERAL:

MOUNTING POSITION	ANY
BASE	SUPER JUMBO 4-PIN WITH BAYONET A4-18 WITH CERAMIC INSERT C1-43, MEDIUM, WITH CORONA SHIELD
ANODE CAP	
COOLING (NOTE 1)	
NET WEIGHT	12 OUNCES
DIMENSIONS	SEE OUTLINE

* FORMERLY OUR KU-25

RATINGS:

Max. Peak Anode Voltage, Forward	12.0	Kilovolts
Max. Peak Anode Voltage, Inverse (Note 2)	12.0	Kilovolts
Min. Anode Supply Voltage	3.5	Kilovolts d.c.
Max. Peak Anode Current	300	Amperes
Max. Average Anode Current	200	Milliamperes
Max. RMS Anode Current (Note 3)	7.75	Amperes a.c.
Max. epy x ib x prr	3.8×10^9	
Max. Anode Current Rate of Rise	1250	Amperes/μSecond
Peak Trigger Voltage (Note 4)		
Max. Peak Inverse Trigger Voltage	200	Volts
Max. Anode Delay Time (Note 5)	0.65	Microsecond
Max. Anode Delay Time Drift	0.10	Microsecond
Max. Time Jitter (Note 6)	0.005	Microsecond
Ambient Temperature	-50° to +90°	Cent.
Shock Rating	13°	Navy (Flyweight) Shock Machine

TYPICAL OPERATION AS PULSE MODULATOR, DC RESONANT CHARGING:

Peak Network Voltage	12.0	Kilovolts
Pulse Repetition Rate	2500	Pulses/Second
Pulse Length	0.4	Microsecond
Pulse Forming Network Impedance	48	Ohms
Trigger Voltage	200	Volts
Peak Power Output (Resistive Load 92% Zn)	736	Kilowatts
Peak Anode Current	130	Amperes
Average Anode Current	0.13	Amperes d.c.
Grid Bias	-50	Volts D.C.

Note 1:

Cooling permitted. However, there shall be no air blast directly on the bulb.

Note 2:

During the first 25 microseconds after conduction, the peak inverse anode voltage shall not exceed 5.0 KV.

Note 3:

The root mean square anode current shall be computed as the square root of the product of the peak current and the average current.

Note 4:

The pulse produced by the driver circuit shall have the following characteristics when viewed at the 8424 socket with the grid of the tube disconnected:

A.	Voltage	200-300 Volts
B.	Duration	2 Microseconds (at 70% points min.)
C.	Rate of Rise	200 Volt/microsecond (min.)
D.	Impedance	50-500 Ohms (max.)

The limits of anode time delay and anode time jitter are based on the minimum trigger. Using the highest permissible trigger voltage and lowest trigger source impedance materially reduces these values below the limits specified.

Note 5:

The time of anode delay is measured between the 26 percent point on the rising portion of the unloaded grid voltage pulse and the point at which evidence of anode conduction first appears on the loaded grid pulse.

Note 6:

Time jitter is measured at the 50 percent point on the anode current pulse.

Additional information for specific applications can be obtained from the

Electron Tube Applications Section
ITT Electron Tube Division
Post Office Box 104
Clifton, New Jersey

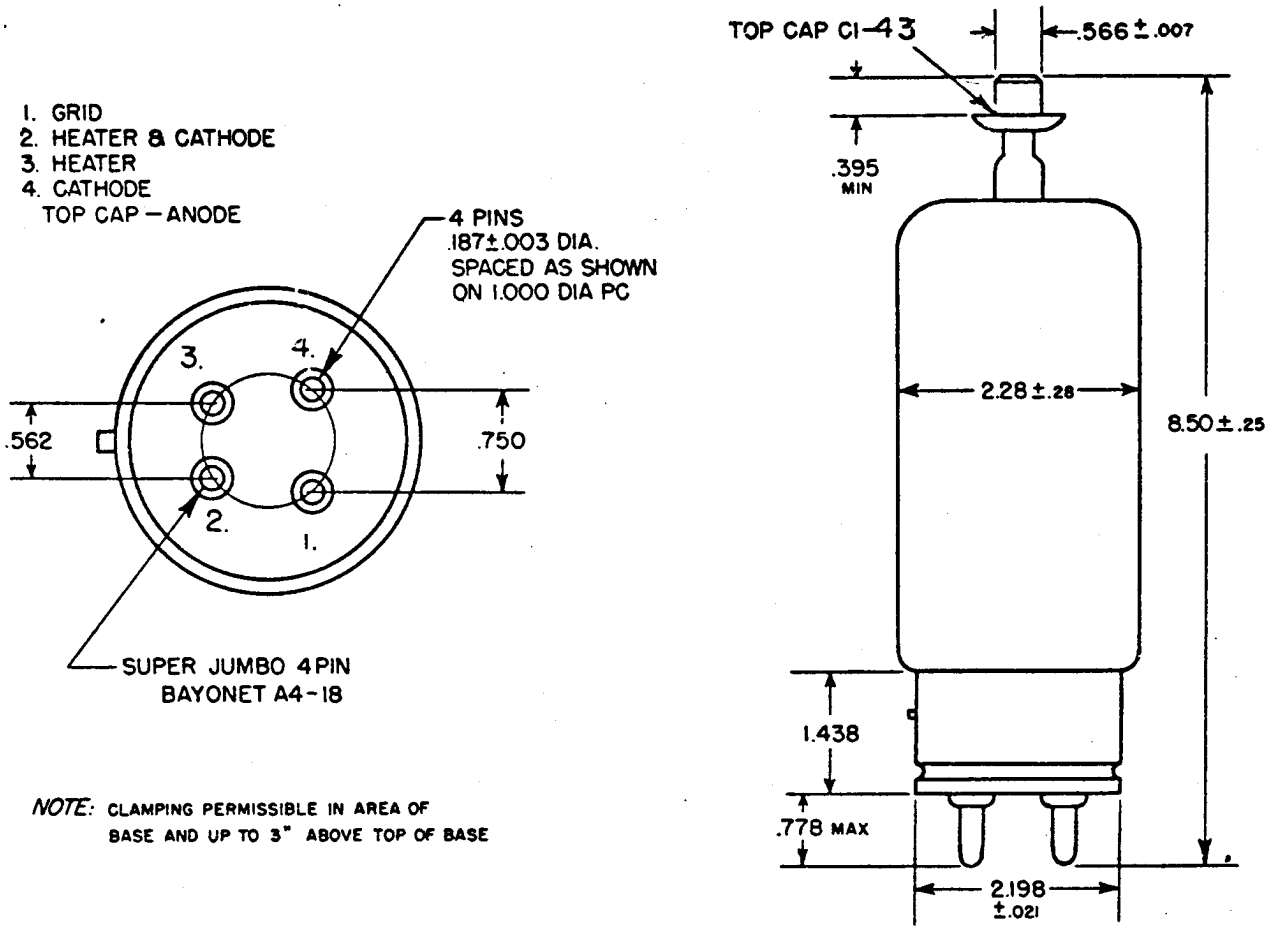

OUTLINE 8424

ELECTRON TUBE DIVISION
BOX 100 EASTON, PA. 18043
INTERNATIONAL TELEPHONE AND TELEGRAPH CORPORATION

HYDROGEN THYRATRON 8488

DESCRIPTION:

The 8488 is a unipotential cathode, three element hydrogen filled thyratron designed for network discharge service. In such service, it is suitable for producing pulse outputs of more than 2 megawatts at an average power level of more than 1.6 KW.

The 8488 features a patented hollow anode connector design which provides direct exposure of the anode to the atmosphere. This permits "battle short" starts without catastrophic failure.

Other features of the 8488 include an internal hydrogen reservoir connected across the filament and capable of producing and maintaining the hydrogen pressure throughout the useful life of the tube. Further features are the high peak voltage and current ratings and the ruggedized construction.

ELECTRICAL DATA, GENERAL:

	Nom.	Min.	Max.			
Heater Voltage	6.3	5.9	6.7	Volts AC	Minimum Heating Time	3 Minutes (Note 7)
Heater Current. E_h = 6.3 volts		9.0	11.0	Amperes		

MECHANICAL DATA, GENERAL:

Mounting Position	Any	Anode Cap	Medium Metal, C1-5 with modification.
Base	Super Jumbo 4-pin with Bayonet A4-18 with ceramic insert	Cooling	Note 1
		Net Weight	10 Ounces

DIMENSIONS:

See Outline Drawing.

RATINGS:

Max. Peak Anode Voltage, Forward	16.0 Kilovolts	Max. RMS Anode Current (Note 3)	6.3 Amperes AC
Max. Peak Anode Voltage, Inverse (Note 2)	16.0 Kilovolts	Max. epy x Ib x prr	3.9×10^9
		Max. Anode Current Rate of Rise	1500 Amperes/μ second
Min. Anode Supply Voltage	3.5 Kilovolts DC	Peak Trigger Voltage	Note 4
Max. Peak Average Anode Current	325 Amperes	Max. Peak Inverse Trigger Voltage	200 Volts
Max. Average Anode Current	225 Milliamperes		

	Initial Limit	End of Life Limit		
Max. Anode Delay Time (Note 5)	0.6	0.6	Microsecond	Ambient Temperature: −50° to + 90° Cent.
Max. Anode Delay Time Drift	0.1	0.1	Microsecond	Shock Rating: 24° Navy (Flyweight) Shock Machine
Max. Time Jitter (Note 6)	0.0005	0.01	Microsecond	

Note 1:

Cooling permitted. However, there shall be no air blast directly on the bulb.

Note 2:

The peak inverse anode voltage shall not exceed 5.0 KV during the first 25 microseconds after the pulse.

Note 3:

The root mean square anode current shall be computed as the square root of the product of the peak current and the average current.

Note 4:

The driver pulse, measured at the tube socket with the thyratron grid disconnected, shall have the following characteristics:

A.	Voltage	200-300 Volts
B.	Duration	2 Microseconds (at 70% points)
C.	Rate of Rise	200 Volts/microsecond (min.)
D.	Impedance	50-500 Ohms

The limits of anode time delay and anode time jitter are based on the minimum trigger. Using the highest permissible trigger voltage and lowest trigger source impedance materially reduces these values below the limits specified.

Note 5:

The time of anode delay is measured between the 26 percent point on the rising portion of the unloaded grid voltage pulse and the point at which evidence of anode conduction first appears on the loaded grid pulse.

Note 6:

Time jitter is measured at the 50 percent point on the anode current pulse.

Note 7:

The 8488 will normally begin to operate in approximately 90 seconds. No damage will ensue on a cold start on this basis if anode power is restricted to 75% of ratings. However, the manufacturer should be consulted if this type of operation is contemplated.

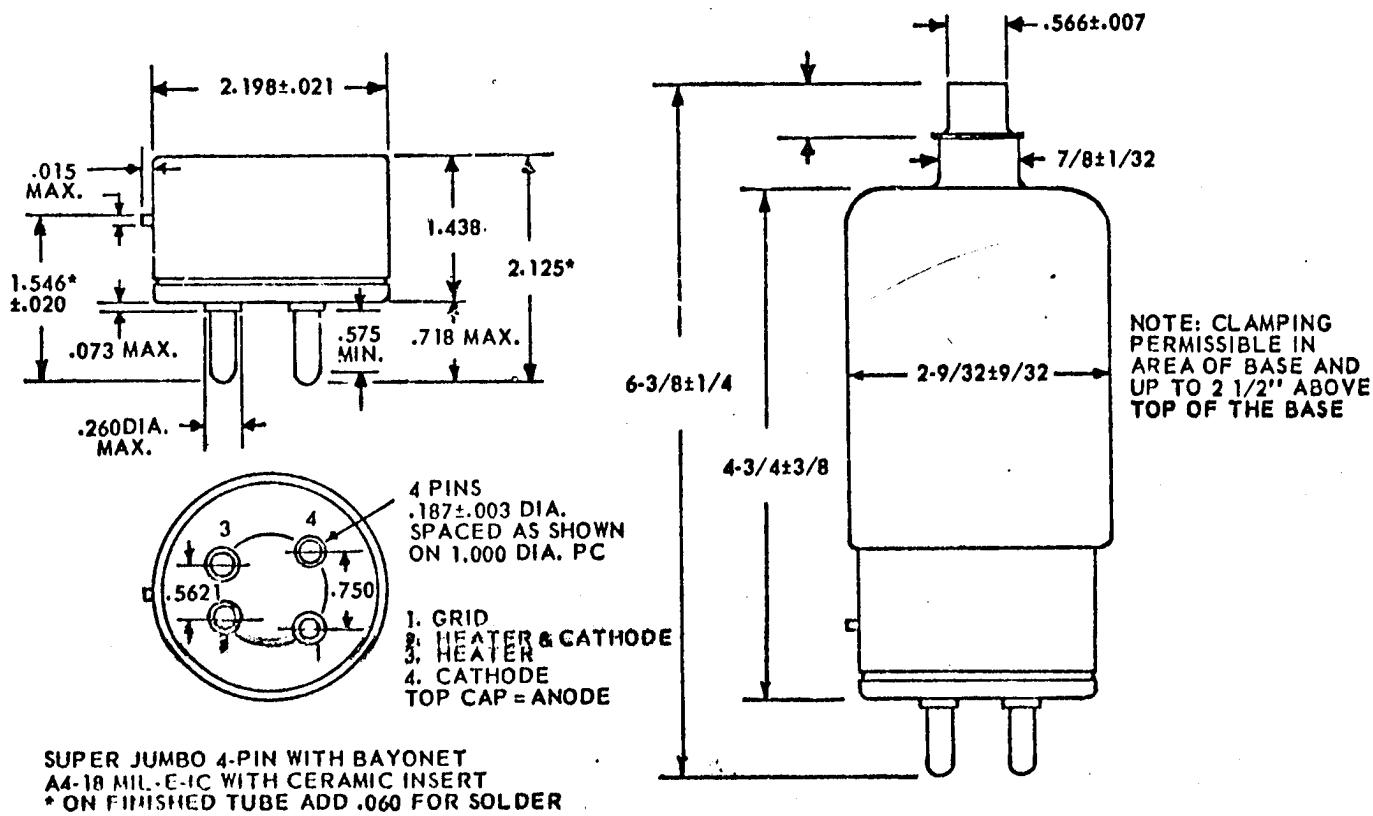

SUPER JUMBO 4-PIN WITH BAYONET
A4-18 MIL-E-IC WITH CERAMIC INSERT
* ON FINISHED TUBE ADD .060 FOR SOLDER

ELECTRON TUBE DIVISION
P.O. Box 100
Easton, Pennsylvania 18042
Telephone 215 252-7331

8553/KU-72Z

CERAMIC HYDROGEN THYRATRON

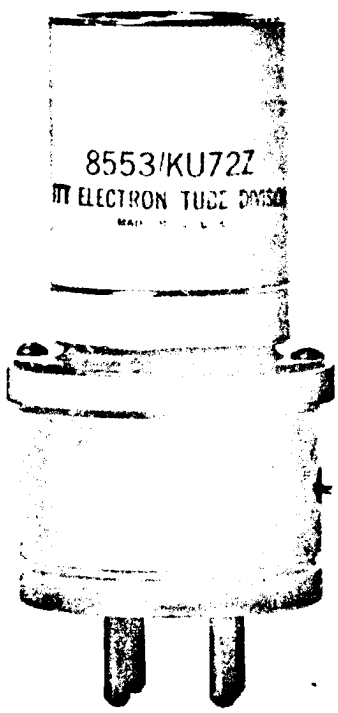

DESCRIPTION

The 8553/KU72Z is a unipotential cathode three element hydrogen thyratron equipped with a ceramic envelope. This electron tube features a hydrogen reservoir which is internally connected directly across the cathode heater supply.

This tube is a plug-in replacement for the 5C22 glass hydrogen thyratron. The ruggedness and small size possible with ceramic construction makes this tube suitable for use in the compact modulators of high performance radars.

ELECTRICAL DATA, GENERAL	Nom.	Min.	Max.	
Heater Voltage	6.3	5.8	6.8	Volts AC
Heater Current (at 6.3 volts)	7.8	6.0	10.0	Amperes
Minimum Heating Time		3		Minutes

MECHANICAL DATA, GENERAL		
Mounting Position	Any	
Base	Per Outline Drwg.	
Cooling (Note 3)		
Dimensions	Per Outline	

RATINGS		
Max. Peak Anode Voltage, Forward	16.0	Kilovolts
Max. Peak Anode Voltage, Inverse (Note 4)	16.0	Kilovolts
Min. Anode Supply Voltage	0.5	Kilovolts DC
Max. Peak Anode Current	500	Amperes
Max. Average Anode Current	500	Milliamperes
Max. RMS Anode Current (Note 5)	6.5	Amperes AC
Max. epy x ib x prr (Pb) (Note 3)	7.0×10^9	
Max. Anode Current Rate of Rise	2000	Amps./u sec.
Peak Trigger Voltage (Note 6)		
Max. Anode Delay Time (Note 7)	0.4	Microsecond
Max. Anode Delay Time Drift	0.10	Microsecond
Max. Time Jitter (Note 8)	.005	Microsecond
Ambient Temperature	-55° to $+150^\circ$	C

This tube was previously designated by the type number KU-72Z

NOTE 1 See outline drawing.

NOTE 2 The reservoir heater is connected internally to the cathode heater.

8553/KU-72Z

NOTE 3 Cooling of the anode is permissible and may be desirable under conditions of high Pb factor operation when 5 cfm of air may be directed into the anode cup. (A saturable reactor may also be required for operation at Pb - 7 x 10^9.)

NOTE 4 During the first 25 microseconds after conduction, the peak inverse anode voltage shall not exceed 5 KV.

NOTE 5 The root mean square anode current shall be computed as the square root of the product of peak current and the average current.

NOTE 6 The pulse produced by the driver circuit shall have the following characteristics when viewed at the 8553 socket with the tube grid disconnected.

A.	Amplitude	200-600 Volts
B.	Duration	2 Microseconds (at 70% points)
C.	Rate of Rise	1800 Volts/Microsecond (min.)
D.	Impedance	50-500 Ohms

The limits of anode time delay and anode time jitter are based on the minimum trigger. Using the highest permissible trigger voltage and lowest trigger source impedance materially reduces these values below the limits specified.

NOTE 7 The time of anode delay is measured between the 26 percent point on the rising portion of the unloaded grid voltage pulse and the point at which anode conduction first evidences itself on the loaded grid pulse.

NOTE 8 Time jitter is measured at the 50 percent point on the anode current pulse.

Additional information for specific applications can be obtained from the:

Electron Tube Applications Section, ITT Electron Tube Division, P. O. Box 100, Easton, Pennsylvania 18042

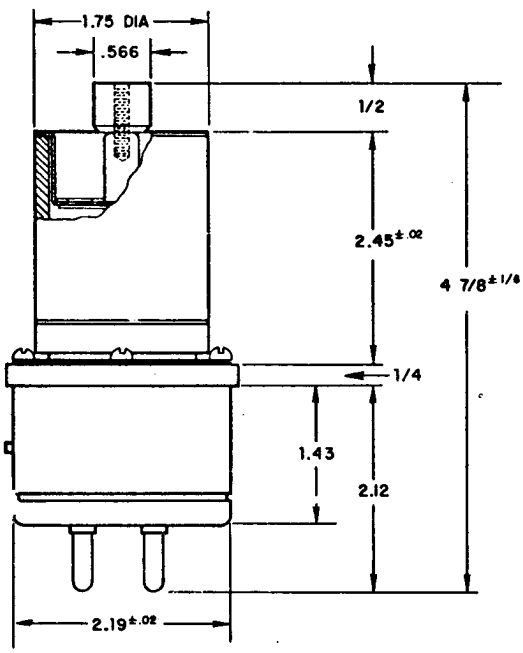

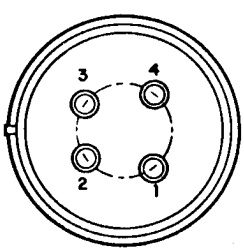

1 GRID
2 HEATER & CATHODE
3 HEATER
4 CATHODE
TOP CAP—ANODE

BASE A4-18

ELECTRON TUBE DIVISION ITT
P.O. Box 100 Easton, Pennsylvania 18042

ELECTRON TUBE DIVISION
P.O. Box 100
Easton, Pennsylvania 18042
Telephone 215 252-7331

8765/KU-71Z

CERAMIC HYDROGEN THYRATRON

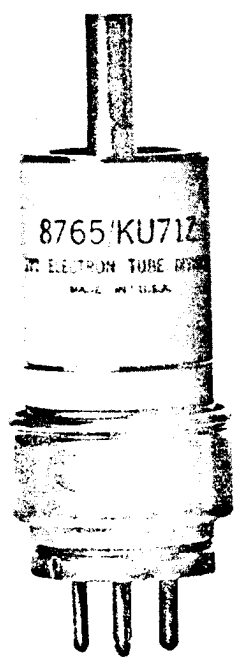

DESCRIPTION

The 8765/KU-71Z is a hydrogen thyratron of ceramic metal construction designed for use in compact modulators of high performance radars and for missile applications. This electron tube features a hydrogen reservoir which is internally connected directly across the cathode heater.

The tube is a plug-in replacement for the KU-17, 5957 and 8370 glass hydrogen thyratrons, and is recommended where long-life, high reliability performance is vital.

GENERAL CHARACTERISTICS

ELECTRICAL	Nom.	Min.	Max.	
Heater Voltage	6.3	5.8	6.8	Volts AC
Heater Current (at 6.3 volts)	6.5	4.5	9.5	Amperes
Minimum Heating Time		3		Minutes

MECHANICAL	
Mounting Position	Any
Dimensions	Per Outline
Cooling	See Note 6

MAXIMUM RATINGS

Max. Peak Anode Voltage, Forward	12.0	Kilovolts
Max. Peak Anode Voltage, Inverse (Note 1)	12.0	Kilovolts
Min. Anode Supply Voltage	0.3	Kilovolts DC
Max. Peak Anode Current	350.0	Amperes
Max. Average Anode Current	200.0	Milliamperes
Max. RMS Anode Current (Note 2)	5.0	Amperes AC
Max. epy x ib x prr (Pb number)	4.0×10^9	
Max. Anode Current Rate of Rise	2000	Amps./u sec.
Peak Trigger Voltage (Note 3)	600	Volts
Max. Anode Delay Time (Note 4)	0.50	u second
Max. Anode Delay Time Drift	0.10	u second
Max. Time Jitter (Note 5)	.005	u second
Ambient Temperature	-50° to $+150^\circ$	C

NOTE 1 The peak inverse voltage should not exceed 2.5 KV during the first 25 microseconds after pulse.

NOTE 2 The root mean square anode current shall be computed as the square root of the product of the peak current and the average current.

8765/KU-71Z

NOTE 3 The driver pulse, measured at the tube socket with the thyratron grid disconnected should have the following characteristics:

A.	Voltage	175-600 Volts
B.	Duration	1-2 Microseconds
C.	Impedance	1500 Ohms (max.)
D.	Time of Rise	0.5 Microsecond (max.)

The limits of anode time delay and anode time jitter are based on the minimum trigger. Using a fast rise trigger with the highest permissible trigger voltage and lowest trigger source impedance materially reduces these values below the limits specified.

NOTE 4 The time of anode delay is measured between the 26 percent point on the rising portion of the unloaded grid voltage pulse and the point at which evidence of anode conduction first appears on the loaded grid pulse.

NOTE 5 Time jitter is measured at the 50 percent point on the anode current pulse.

NOTE 6 It may be desirable to employ forced air cooling under conditions of high Pb number operations. A cooling air stream of 5 cfm may be directed into the anode cup.

Additional information for specific applications can be obtained from the:

Electron Tube Applications Section, ITT Electron Tube Division, P. O. Box 100, Easton, Pennsylvania 18042

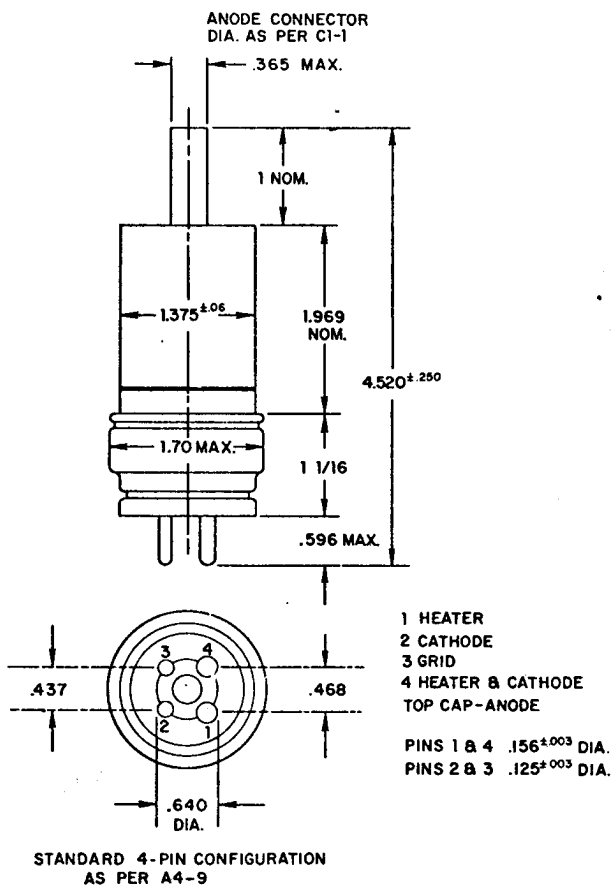

STANDARD 4-PIN CONFIGURATION
AS PER A4-9

ELECTRON TUBE DIVISION ITT
P.O. Box 100 Easton, Pennsylvania 18042

ITT	28 cm-Rectangular TV Picture Tube, 90° deflection angle, aluminized screen, with tensionband for battery-operated television-sets	A28-13W - Preliminary -

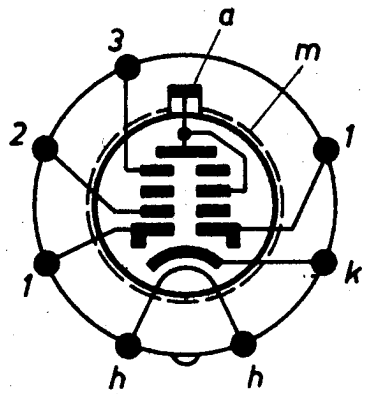

Electron gun		Tetrode with Einzel-lens
Bulb		All-glass
Base		Special miniature (7 pins)
Focusing		Electrostatic
Deflection		Magnetic
Angle of deflection	Diagonal	90°
	Horizontal	80°
	Vertical	63°
Neck diameter		20 mm
Face	Shape	Spherical
	Material	Filter-glass (Light-transmittance 62 % appr.)
Phosphor		P 4-Aluminized
Fluorescence colour		White
Colour temperature		7500° K appr.
Minimum useful dimensions		228 x 171 mm
		Diagonal 262,5 mm
Overall length incl. base		Max 245 ± 5 mm
Weight		2,0 kg appr.

1. Heater Characteristics for Parallel Connection

Heater voltage	11[1]	volts
Heater current	68 appr.	ma

Oxide cathode, indirectly heated

2. Typical Operating Conditions (Cathode drive service)[2]

Anode voltage	11 000		volts
Screen grid voltage	200 to 350	250	volts
Focusing voltage[4]	0 to 350		volts
Cut-off voltage	45 appr.[3]	32 to 58	volts

The external conductive coating of the tube shall be grounded.

The tube can be used without safety glass.

---

1) At mains-connection ± 15 %.
At stabilized operation or when heating from the scanning-line-transformer ± 10 %.
At battery operation look at the diagram on page 6.

2) Unless otherwise specified, all voltages are positive with respect to grid No. 1.

3) The cut-off voltage is defined by tact voltage, below which disappears the raster adjusted to give a sharp image.

4) The voltage to be set depends on the deflection system utilized and the operating conditions.

3. Ratings

Anode voltage (I_k = 0)	12 000	volts
Minimum anode voltage	7 500 [1]	volts
Maximum grid No. 3 voltage	450	volts
Maximum negative grid No. 3 voltage	-100	volts
Maximum screen grid voltage	450	volts
Minimum screen grid voltage	180	volts
Maximum cathode voltage	100	volts
Minimum cathode voltage	0	volt
Maximum cathode peak voltage	350 [2]	volts
Minimum negative cathode peak voltage	-2	volts
Specif. screen dissipation per sqcm	10	mw/cm^2
Grid leak resistance DC	1.5	megohms
Grid leak resistance AC (50 C/s)	0.5	megohm
External resistance between heater and cathode DC	1.0 [3]	megohm
External resistance between heater and cathode AC (50 C/s)	0.1 [4]	megohm
Maximum heater - cathode voltage	80 [5]	volts
Maximum heater - cathode peak voltage	130	volts

The power cource generating the operating voltage shall be designed so, that the permanent current resulting from a short-circuit is less than 5 ma.

4. Capacitances

Control grid - all other electrodes	appr. 6	pF
Cathode - all other electrodes	appr. 3	pF
Anode - external conductive coating	700	pF
Anode - tensionband	125	pF

5. Particular Indications

a) The maximum grid No. 3 current may be 24 µa.

b) The high field intensity present in the tube neck may lead to fluorescence on the glass; however, no conclusions can be drawn from this as to vacuum and life of tube.

c) Excluding extraneous fields, the center of the undeflected focused spot will fall within a circle having 9.0 mm radius concentric with the center of the tube face.

- -

Notes for page 2

1) The anode voltage should not be below minimum rating. The picture sharpness decreases with decreasing anode voltage, and with an anode voltage below 7500 volts dark screen areas might appear due to the aluminization, as the velocity of the electrons will not be sufficiently high to penetrate the aluminium coating.

2) Line change impulse max 22 % of line sweep period.
Frame change impulse max 1.5 ms.

3) With separate transformer.

4) With series connection.
When feeded by separate transformer, this external resistance may be 1 MΩ.

75. 3104 (33-03)

5) To avoid picture distortions, the interference proceeding from the heater must be kept as low as possible. Therefore, the AC-voltage between heater and cathode shall by no means exceed the value V_{hkrms} = 20 volts.

- -

Notes for page 4 and 7

1) The reference line is defined by the marked plane of the reference line gauge if the letter rests against the cone of the bulb. The gauge must not be supported on the front.

2) Angular deviations between the anode cavity cap and the base pins No. 1 and 5.

3) This area is to be cleaned only with soft dry lintless cloth.

4) The point "Z" is a reference point to the position of the points "X" and "Y".
The dimensions for the points "X", "Y" and "Z" are identically to the minimum useful screen dimensions.

5) For the mounting bolts, a free passage of at least 5,7 mm diameter at nominal position is ensured.

6) The indicated dimensions rely on the bulb.

7) This stud is provided for putting-on a clip (e.g. type Faston).

75. 3104 (33-02)

A28-13W

- Preliminary -

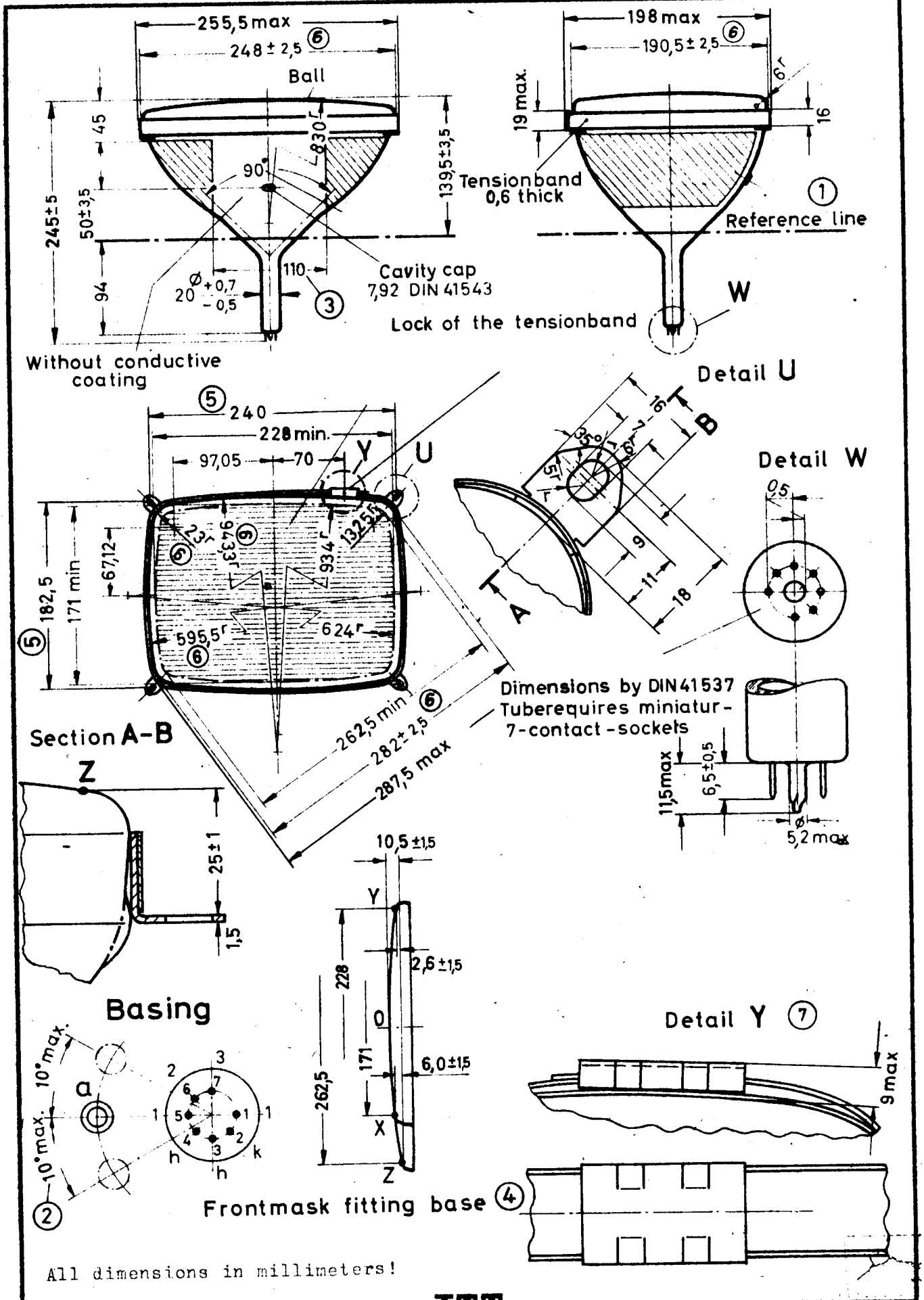

All dimensions in millimeters!

ITT

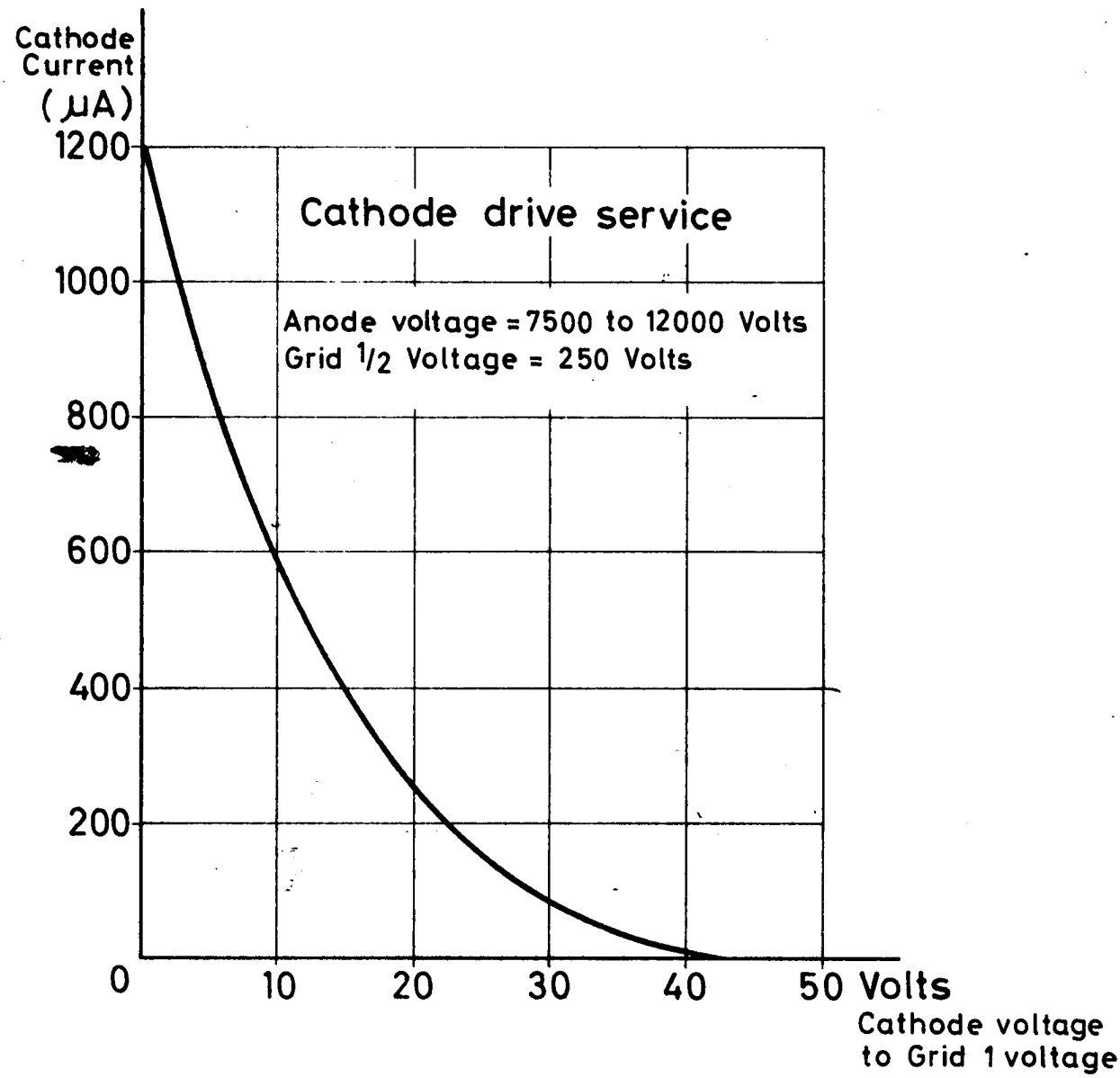
Cathode Current (µA)
1200
1000
800
600
400
200
0
Cathode drive service
Anode voltage = 7500 to 12000 Volts
Grid 1/2 Voltage = 250 Volts
10
20
30
40
50 Volts
Cathode voltage to Grid 1 voltage

A28 - 13W

- Preliminary -

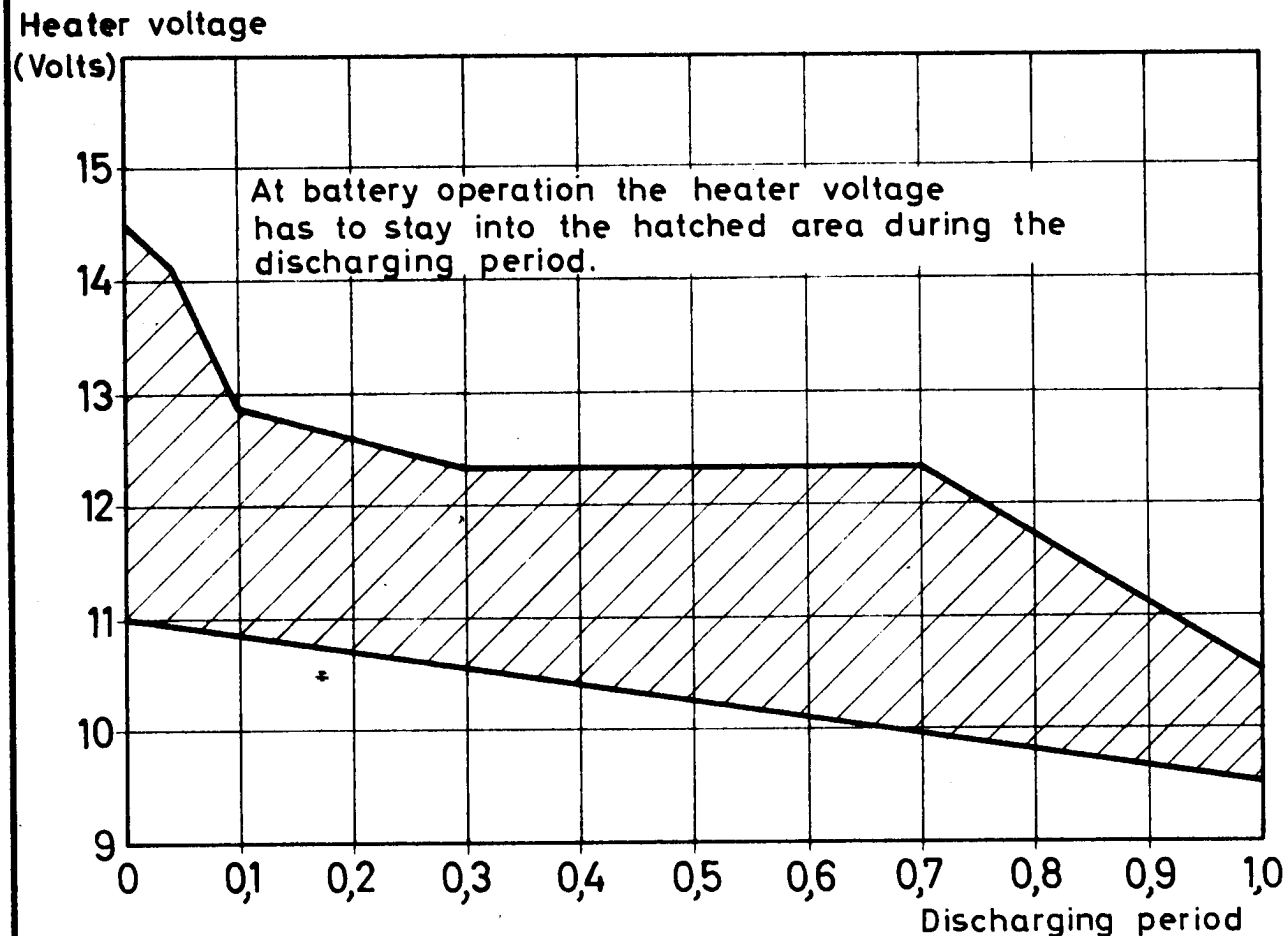

ITT

Dec. 17th, 1965

Reference line gauge

for Picture tubes with 90° deflection angle and 20 mm neck diameter

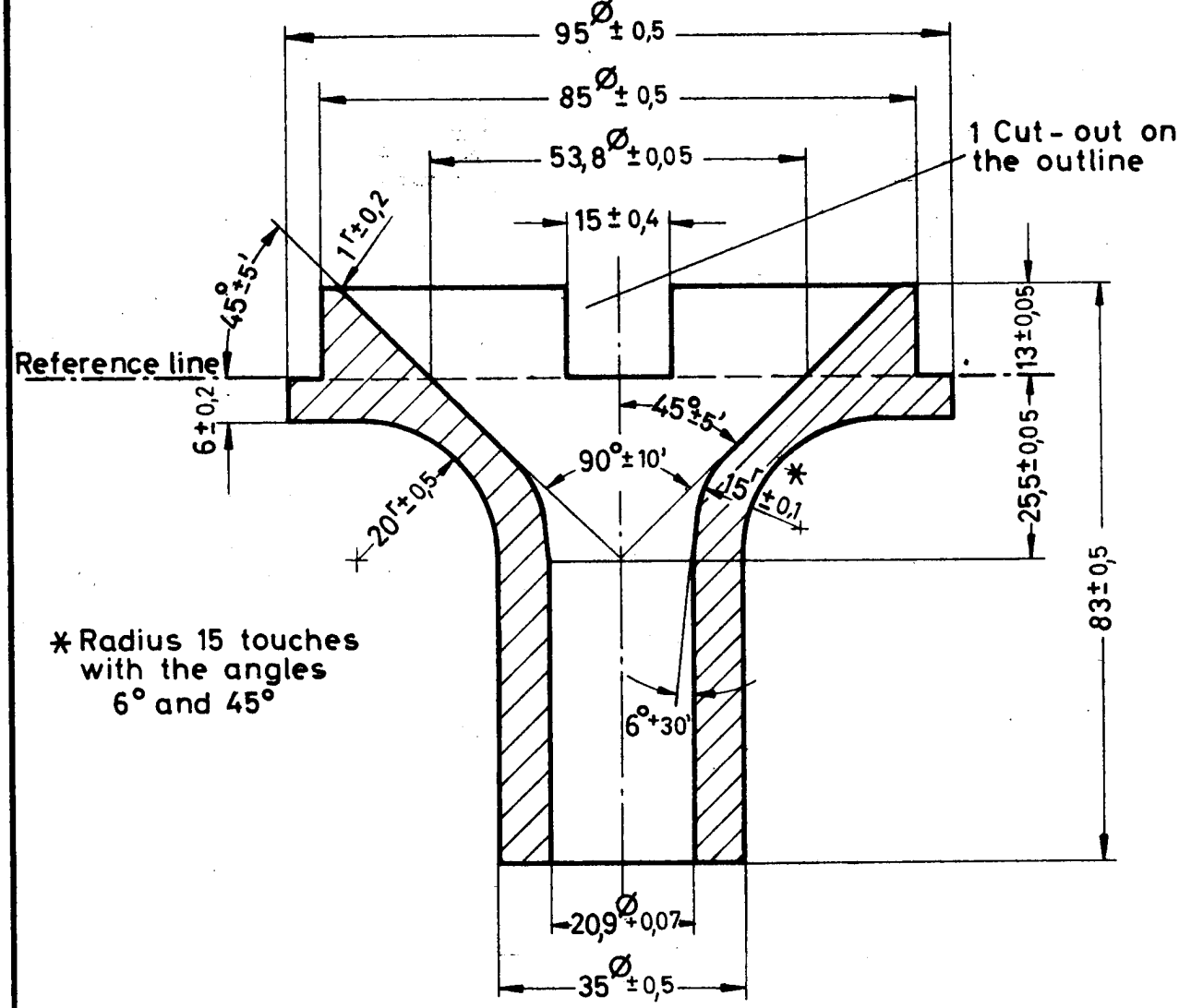

* Radius 15 touches with the angles 6° and 45°

All dimensions in millimeters!

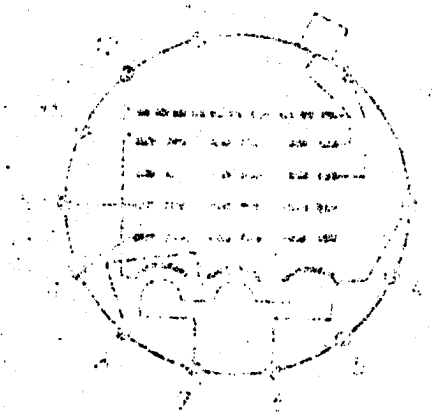

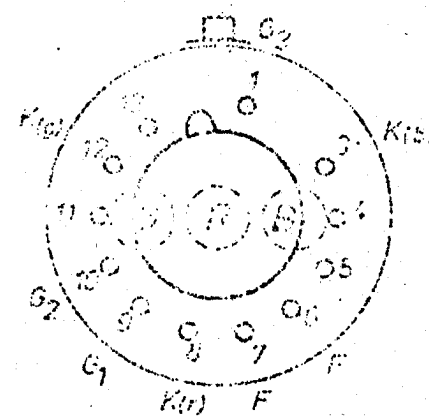

Technical Data 15 pages.

Alterations reserved.

DESCRIPTION

The SEL-Picture Tube A 51-190 X is a rectangular colour picture tube with 90° deflection angle and 29 mm neck diameter.

The useful screen area of 1190 cm^2 (appr.) has nearly straight sides of 40 x 30 cm (appr.) with 3 x 4 aspect ratio. The filter-glass of the faceplate has a light transmission of 65,5 % (appr.)

The phosphor screen is composed of red-, green- and blue-emitting vertical phosphor stripes. The green- and blue-emitting phosphors are silver activated sulfide phosphors, the red emitting phosphor is composed of yttrium compounds activated with rare-earths.

The tube is operating according to the shadow mask principle, whereby however slots have replaced the conventional round holes.

The tube utilizes three electrostatic-focus guns, lieing horizontal in-line. So, in combination with the integrated tube components a dynamic convergence is achieved and no additional correction components are necessary.

The neck components (yoke, one pair of permanent magnetic rings for colour purity, two pairs of permanent rings for static convergence) are fixed on the neck by the manufacturer and are adjusted exactly for optimum performance that no further adjustment is needed.

Magnetic Shield:

To reduce the influence of external interference fields an internal magnetic shield are supplied.

This shield takes effect only after degaussing. This may be done automatically by means of a degaussing coil when the equipment is switched on. An initial magnetic flux with a peak value of appr. 700 ampere turns is recommended.

1. MECHANICAL DATA

Bulb	All-glass Type with rectangular Spherical Faceplate of Filterglass (Push-Through Presentation)	
Implosion Protection	Steel-Jacket with Lugs	
Minimum Useful Screen Dimensions		
Aspect Ratio 3 x 4	Diagonal	480 mm
	Horizontal	404 mm
	Vertical	303 mm
Deflection Angles	Diagonal	90°
	Horizontal	78°
	Vertical	60°
Weight	12,7 kg (appr.)	
Base	JEDEC B 12-262	

2. ELECTRICAL DATA

2.1. TYPICAL OPERATING CONDITIONS [1]

Heater Voltage	U_f	6,3 V [2]
Heater Current	I_f	0,750 A (appr.)
Anode Voltage	U_{g4g5a}	25 kV
Focusing Voltage	U_{g3}	4,2...5,0 kV

Cutoff Design Chart [3]
see diagrams page 8 and 9

2.2. MAXIMUM RATINGS [1]

Anode			
Voltage	U_{g4g5a}	max	27,5 kV [5]
	U_{g4g5a}	min	20 kV
Current [4]	I_{g4g5a}	max	1,0 mA
Focusing Electrode			
Voltage	U_{g3}	max	6,0 kV
Grid-No. 2			
Peak Voltage (incl. Video Signal)	$U_{g2\,p}$	max	1,0 kV
Cathode			
Positive Peak Voltage	$U_{k\,p}$	max	400 V
Positive Operating Cutoff Value	U_k	max	200 V
Negative Bias Value	$(-U_k)$	max	0 V
Negative Peak Value	$(-U_k)_p$	max	2 V
Heater/Cathode [7]			
Voltage [8]	$U_{-f/k}$	max	450 [9] V
	$U_{-f/k}$	max	200 V
	$U_{-f/k\,p}$	max	200 V
	$U_{+f/k\,p}$	max	200 V
	$U_{+f/k}$	max	0 V

Notes see page 4 and 5

2.3. RATINGS FOR CIRCUIT DESIGN

Leakage current[6]	I_{g3}	$\leq \pm$ 15	µA
	I_{g2}	$\leq \pm$ 5	µA
	I_{g1} (U_k = 150 V)	$\leq \pm$ 5	µA

NOTES FOR PAGE 3 AND 4

1) For cathode drive service. Voltage values are for each gun and refer to grid-1-potential.

2) Maximum heater voltage tolerance of + 10 % is admissible. For maximum cathode life, it is recommended to regulate heater supply to 6.3 V.

3) Maximum ratio of cathode cutoff voltages, Highest Gun to Lowest Gun in any tube will not exceed the value of 1.5.

4) Due to a higher total anode current of longer duration, deformation of the shadow mask may be effected, causing colour impurities. To avoid this effect, a limitation of the total anode current to 1.5 mA is practically sufficient.

5) Design-Maximum Rating should not be exceeded under the worst probable operating conditions.

6) These values indicate the permissible leakage currents of the electrodes concerned. The circuit must be designed in such a manner that the voltage applied are not substantially altered by these currents.

7) The equipment should be designed mechanically and electrically so that in consequence of an internal arc no power sources alone or in combination will cause a discharge current across the heater exceeding 750 mA.
Such current limitation will prevent heater burnout.

8) To avoid picture distortions, the interference from the heater must be kept as low as possible. Therefore, the AC voltage between heater and cathode shall not exceed the value $U_{f/k\ rms}$ = 20 V.

9) During warm-up period not exceeding 15 second $U_{-f/k\ max}$ may increase to 450 V; within 15 and 45 seconds this value must decrease at least gradually to 200 V.

2.4. CAPACITANCES

Grid-No.1 to all other electrodes	c_{g1}	(appr.)	15 pF
Cathode to all other electrodes	c_k	(appr.)	15 pF
Grid-No 3 to all other electrodes	c_{g3}	(appr.)	6 pF
Anode to external conductive coating	$c_{g4g5a/m}$ max		2200 pF
	$c_{g4g5a/m}$ min		1400 pF
Anode to steel-reinforcement	$c_{g4g5a/m'}$	(appr.)	250 pF

3. OPTICAL DATA

Faceplate Filterglass
Light Transmission (appr.) 65.5 %

Screen Always three separated vertical stripes of red-, green- and blue-phosphors, aluminized.

Spacing between centres of stripes in the centre of screen (appr.) 0.82 mm

Colour dot Coordinates	x	y
Red	0.660	0.334
Green	0.285	0.606
Blue	0.151	0.061
Coordinates for White	0.281	0.311

Ratio of cathode currents for White

Red to Green	1.0	(0.5...1.6)
Red to Blue	1.4	(0.8...2.0)

75.3368 (17-05) „Sehr-Normdruck" 68 6332 73

4. GENERAL CONSIDERATIONS

X-RADIATION

At the maximum permissible anode voltage of 27.5 kV and a total anode current of 1.0 mA, X-Radiation will not exceed the permissible value of 0.5 mR/h.

MOUNTING INFORMATION

Orientation
The tube must be operated with the large tube axis in a horizontal position.
The deflection yoke should not be used for supporting the picture tube.

Socket
Socket should not be rigidly mounted but connected by flexible leads and should not be used for supporting the tube. The base may be located within a circle of 51 mm diameter, concentric with the perpendicular line through the centre of screen.

Steel-reinforcement
Mounting angles of the steel-jacket may be used for fixing the tube in the receiver. Corresponding data see drawing page 11.

External conductive coating
Contact to the external conductive coating should be made by multiple fingers to prevent localized overheating.

Steel jacket and external conductive coating are separated galvanically against each other. They may be connected mutually if it is allowed by the effective safety rules.

The impedance between steel jacket and external conductive coating must not exceed 1 MΩ at 50 Hz and 5 kΩ at 15 kHz.

Anode contact
The area round the anode contact is coated with a water-repellent insulating layer, to clean it wipe only with soft dry lintless cloth.

5. APPLICATION DATA

Reference potential
Unless otherwise specified, voltage values apply to each gun and refer to grid-1-potential.

Focusing Electrode
Focusing voltage for optimum focus is 17...20 % of anode voltage.

Cutoff Limiting
The voltages are to be seen in the Cutoff Design Chart, page 8, in connection with the Cathode Drive Characteristic page 9.

Raster displacement measured at centre of screen: max ± 6.35 mm

The yoke and the additional deflection components are fixed and adjusted by the manufacturer according to the drawing on page 11.

Grounding
The external conductive coating is to connect with the negative high voltage terminal.

Arc-over protection
In order to minimize the possibility of tube damage caused by an internal arc, it is recommended to limit the high voltage power for anode and grid-No. 3 and to apply protective gaps.

Maximum ratings
The network is to lay out in such a manner that the data should not be exceeded during life, even under the worst probable operating conditions with respect to supply-voltage variation, equipment component variation or signal and environmental conditions. The high voltage limiting values are of absolute maximum rating type, which are not to exceed initially and throughout life.
The picture tube must not be connected until the high tension has been adjusted within the limiting values.

CUTOFF DESIGN CHART

U_{g4g5a} = 20...27.5 kV
U_{g3} ADJUSTED FOR FOCUS

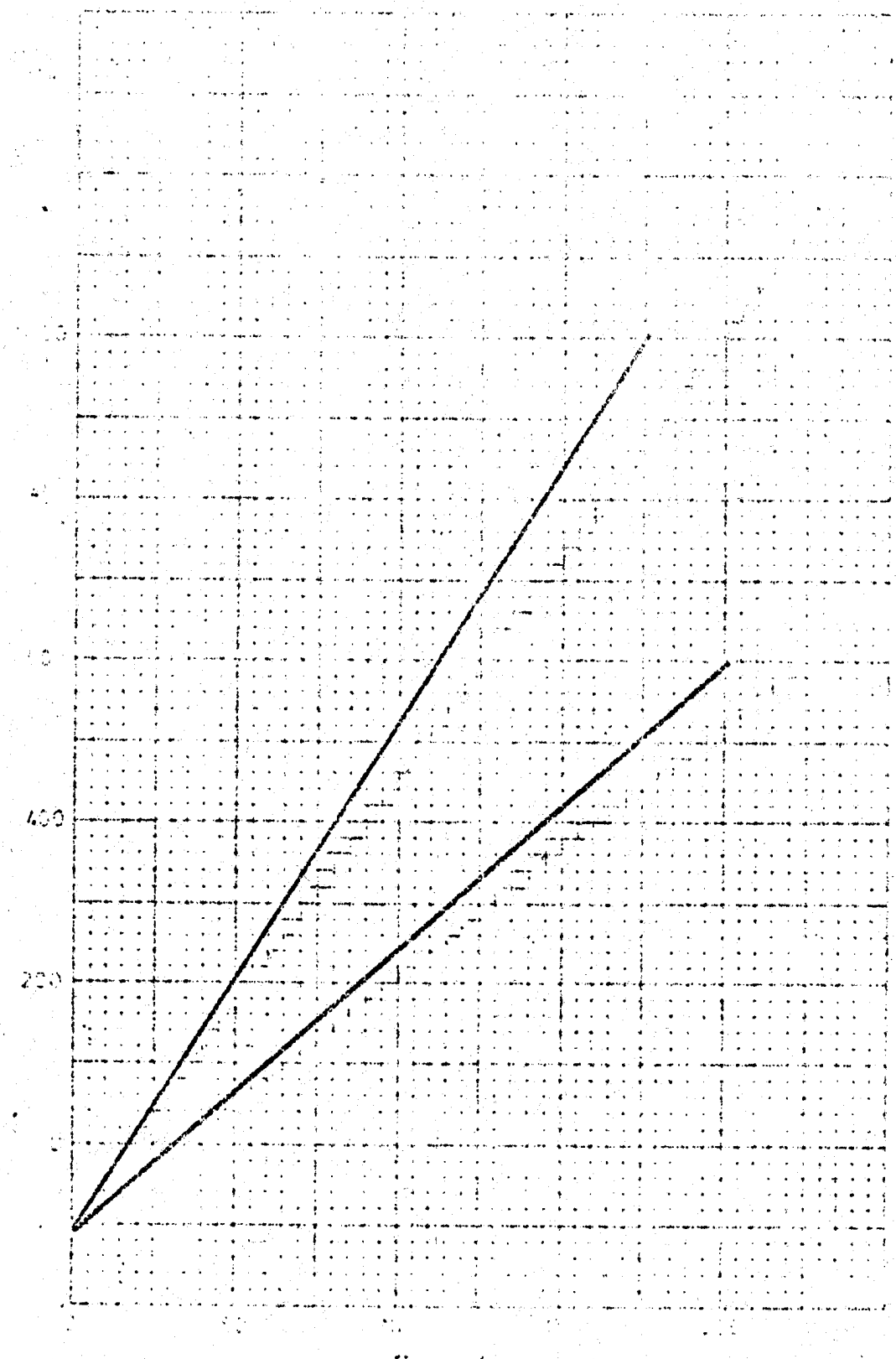

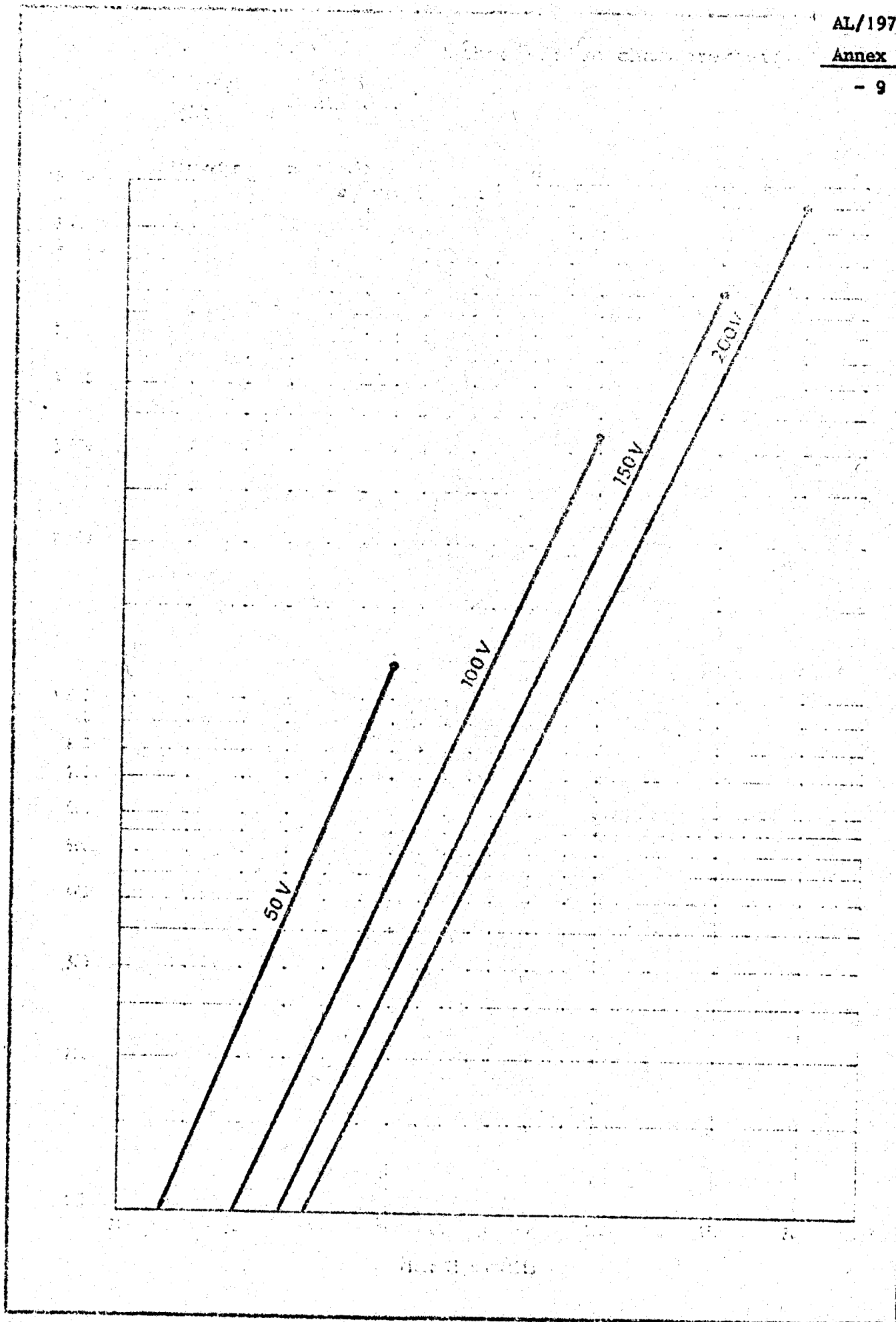
50 V
100 V
150 V
200 V

NOTES (Dimensional Drawings)

1) Cavity cap 7,92 according to DIN 41 543 (JEDEC Nr. J 1-21).

3) This area is free of external conductive coating and must be kept clean.

4) The tube base will fall within a tolerance circle of max. 51 mm diameter, with respect to the tube axis.
The socket should not be rigidly mounted but must be connected by flexible leads.

5) For mounting bolts a free passage of at least 8.5 mm diameter at nominal position is ensured.

6) Dimensions of the bulb, measured at the front edge of the implosion protection.

7) The maximum deviation of any mounting lug from the plane formed by the three other lugs is 2 mm.

8) The Z points are reference points for the vertical position of the X and Y points. The dimensions for the position of the X, Y and Z points count also for the border line of the minimum useful screen area.

11) The outer limitation of the mounting lugs lies within these maximal dimensions.

15) Mounting holes for the degaussing coils.

20) Metal frame and external coating are galvanically separated against each other. They may be connected mutually if it is allowed by the effective safety rules. The impedance between metal frame and external coating must not exceed 1 MΩ at 50 c/s and 5 kΩ at 15 kc/s.

21) The external conductive coating of the tube must be connected with the negative high voltage terminal.

22) Minimum useful screen area.

23) All over bare metal.

24) Do not put any other magnetic materials in this area to prevent deterioration of tube performance (convergence, beam landing).

25) Frit seal.

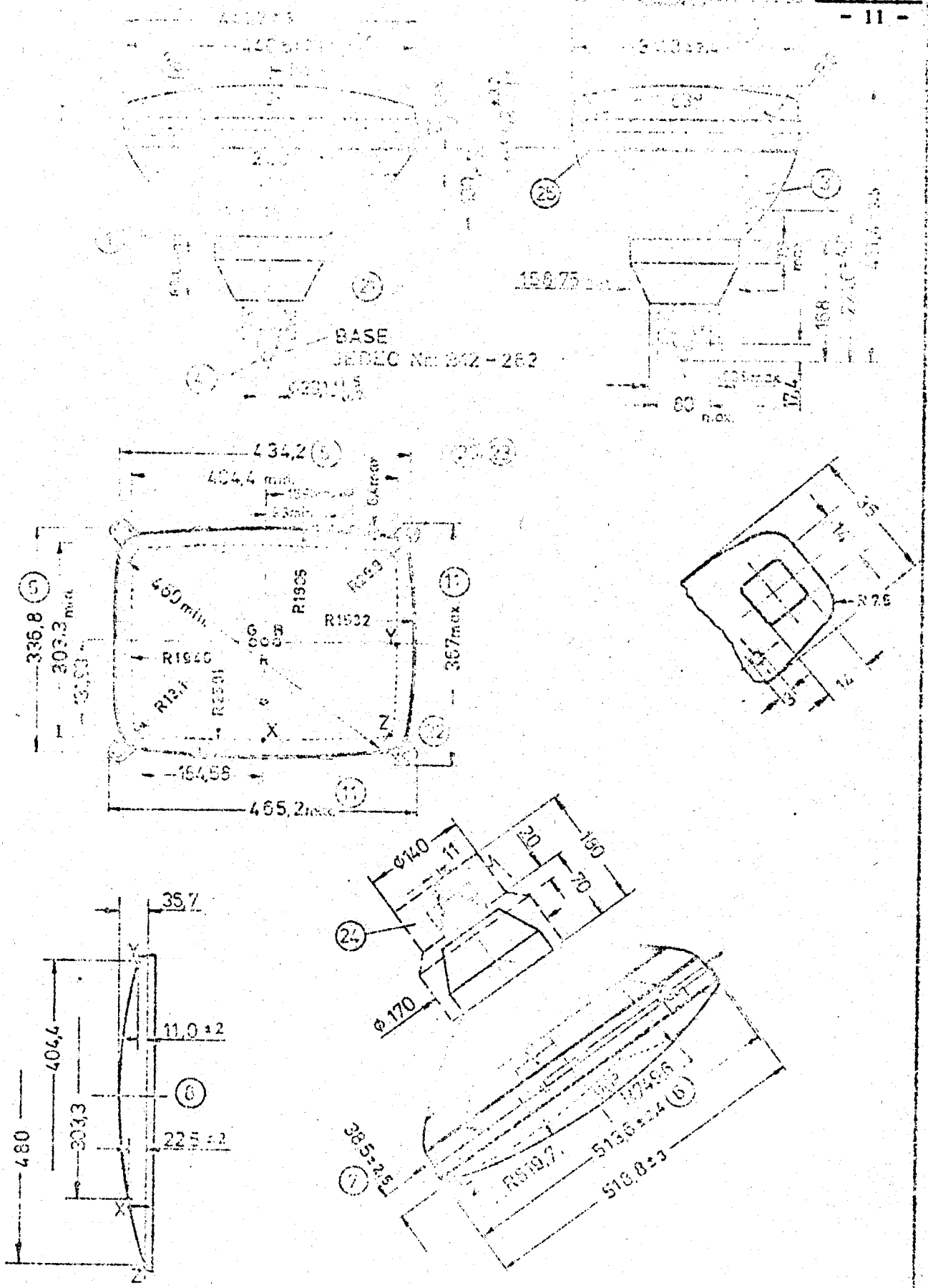
BASE
JEDEC No: B12-262
434,2
404,4 min.
460 min.
R1905
R1532
R1940
336,8
303,3 min.
367 max.
164,58
465,2 max.
35,7
11,0 ±2
22,5 ±2
404,4
303,3
480
Φ140
11
20
180
70
Φ170
R749,6
R519,7
513,6 ±2,4
518,8 ±3
38,5 ±2,5
R7,6
35
14
3

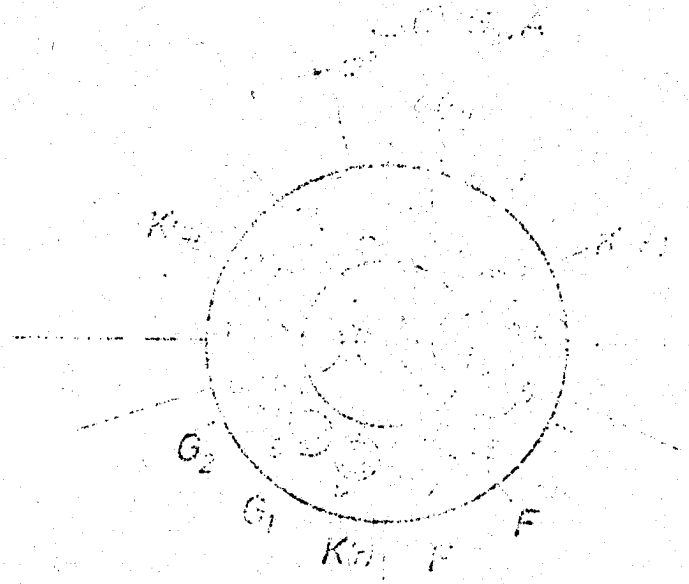

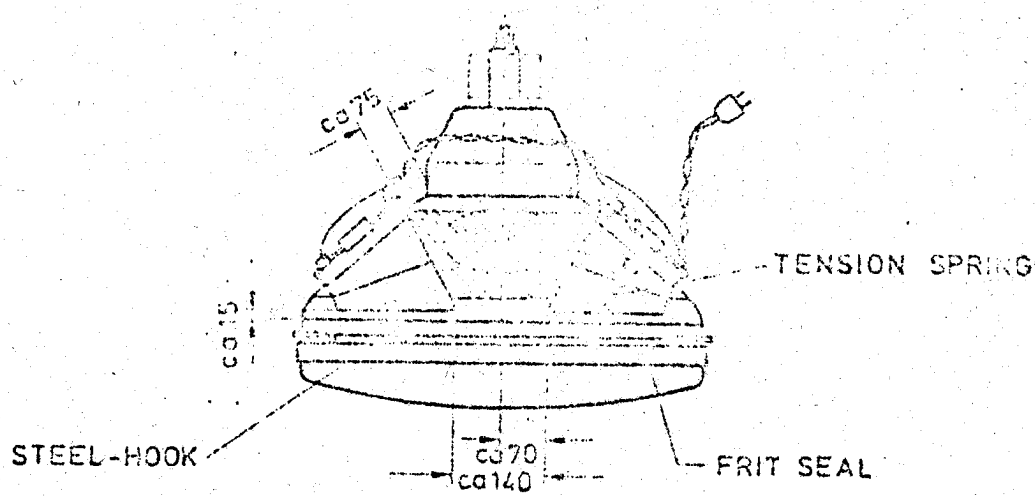

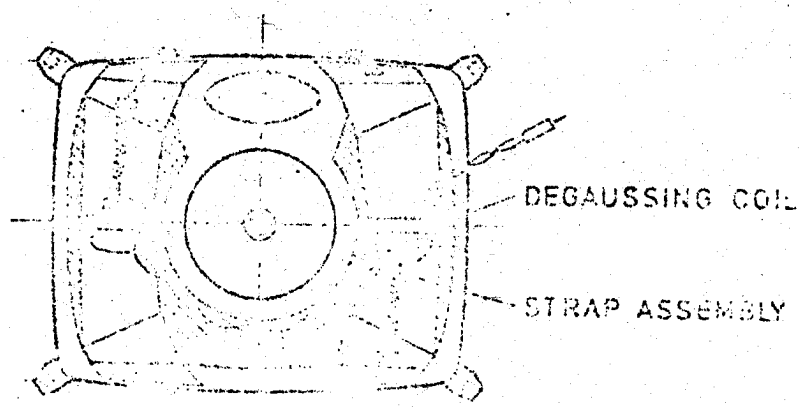

FIG. 4 LOCATION OF THE STRAP ASSEMBLIES ON THE TUBE

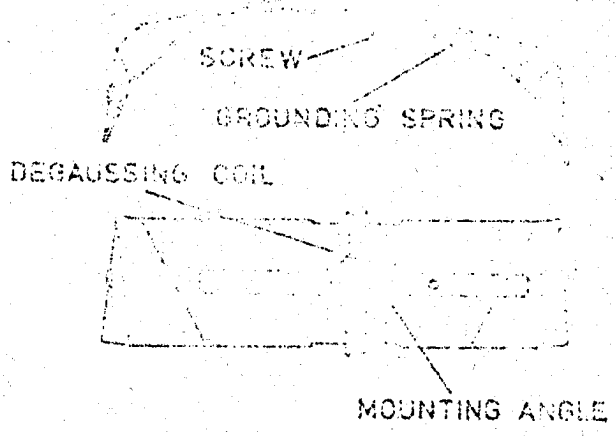

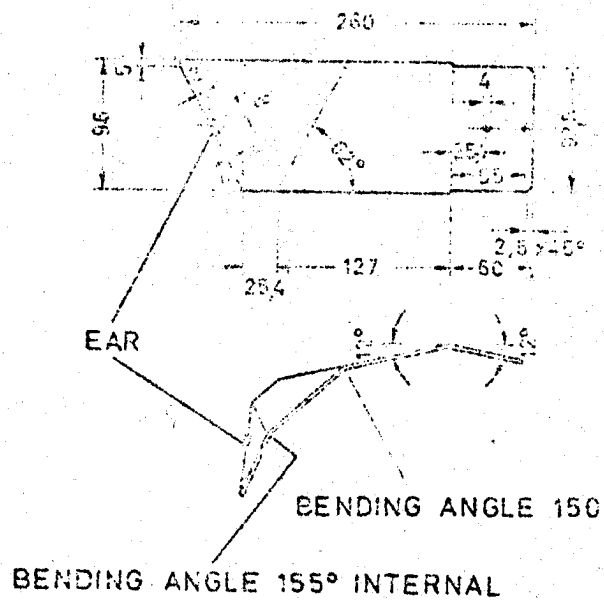

FIG. 2 DEGAUSSING STRAP (LEFT-HAND SIDE)
MATERIAL:
STRAP 0,75 DIN 1541 MUSt 1203
TIN PLATED DIN 1616 H 15

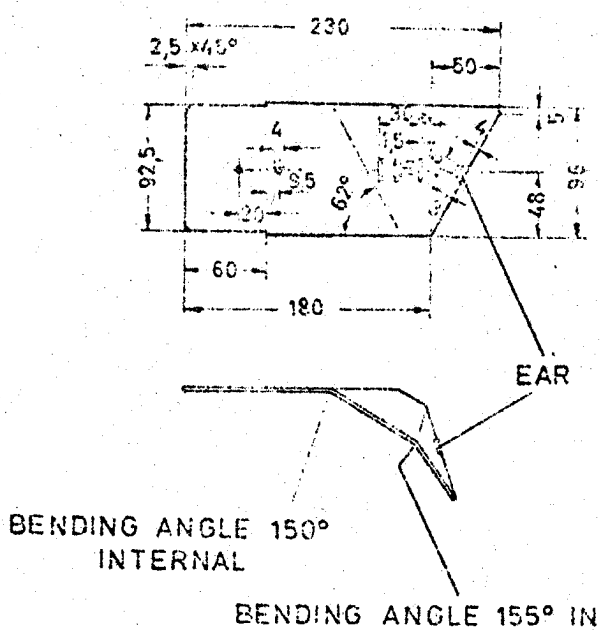

FIG. 3 DEGAUSSING STRAP (RIGHT-HAND SIDE)
MATERIAL:
STRAP 0,75 DIN 1541 MUSt 1203
TIN PLATED DIN 1616 H 15

COLOUR DEFLECTION UNIT

Horizontal Coils: Series connected
(pins 5 and 10; 4 connected with 9)

Inductance at 1 V and 1 kHz	0.664 ± 4 %	mH
Resistance at 25°C	1.452 ± 7 %	Ω
Deflection current peak to peak at 25 kV and 102 % picture width	5.9	A

Parallel connected
(pins 5 and 10; 4 connected with 5 and 9 connected with 10)

Inductance at 1 V and 1 kHz	0.166 ± 4 %	mH
Resistance at 25°C	0.36 ± 7 %	Ω
Deflection current peak to peak at 25 kV and 102 % picture width	11.8	A

Vertical Coils: Series connected
(pins 1 and 6; 2 connected with 7)

Inductance at 1 V and 1 kHz	1.14 ± 4 %	mH
Resistance at 25°C	1.87 ± 7 %	Ω
Deflection current peak to peak at 25 kV and 102 % picture width	3.6	A

Maximum Ratings: Peak Pulse Voltage between horizontal and vertical coils max. 700 V

Operating Temperature max. 105°C

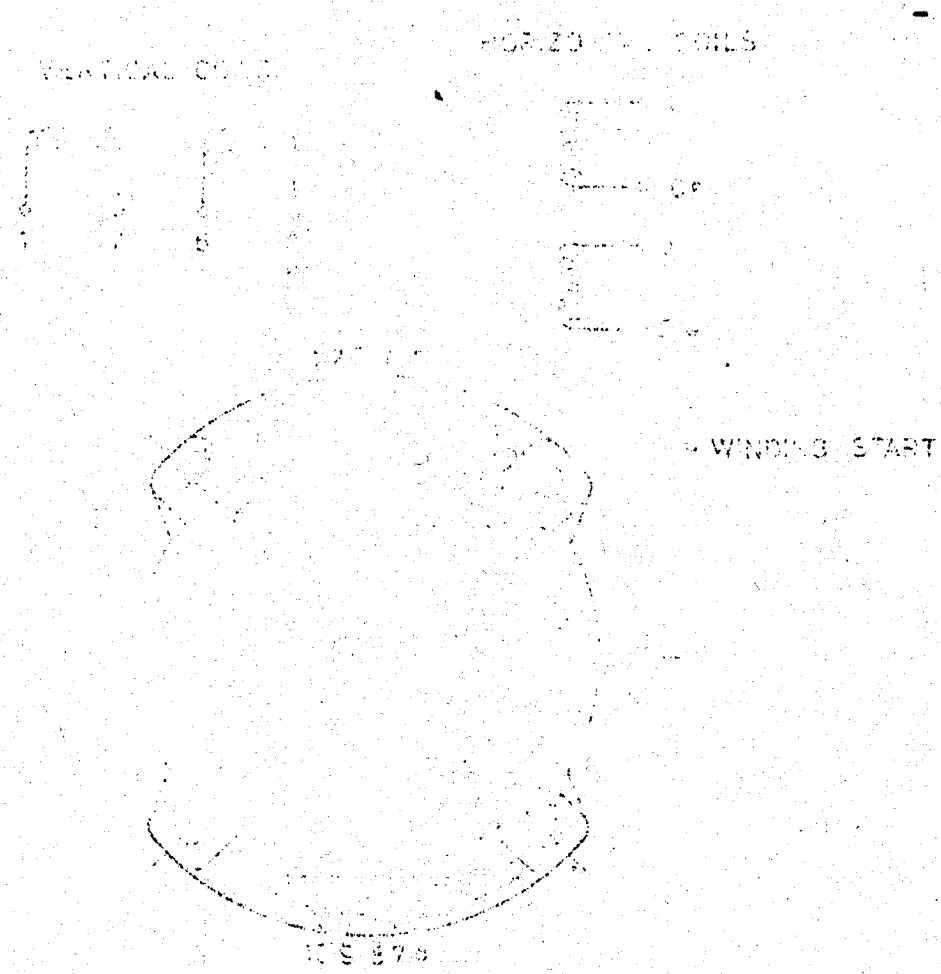
WINDING START

COLOUR PICTURE TUBE
HELIOCHROM

with integrated neck components
semitoroid

A51-210X
A51-211X

20"

preliminar

A51-210X

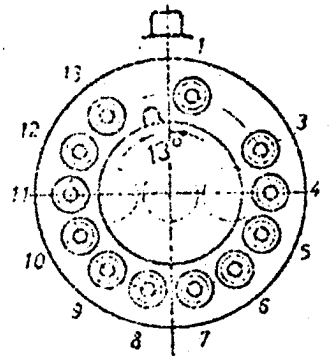

Tube base
JEDEC B 12-262

A51-211X

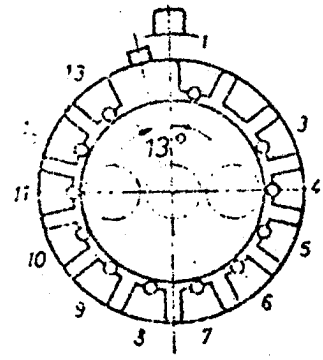

Tube base
JEDEC B 12-260

1 Grid No. 3
3 Blue cathode
6 Heater
7 Heater
8 Red cathode
9 Grid No. 1
10 Grid No. 2
12 Green cathode
Grid No. 4, Grid No. 5
Anode and slotted mask

Unused pegs must not be connected

Deflection yoke

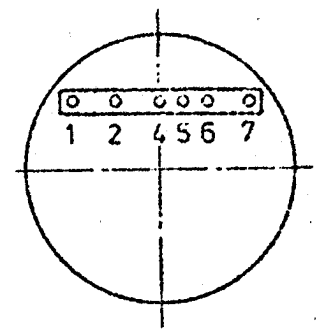

1 N.C.
2 Horiz. coil
4 Horiz. coil
5 Vert. coil
6 Vert. coil
7 N.C.

Tube

51 cm (20") screen diagonal
90° deflection angle
Extremely rectangular
Sides approx. 30 x 40 cm
Screen area approx. 1190 cm^2
Neck diameter 29 mm
Quick heating cathode
No convergence correction necessary
Neck components optimally adjusted - solidly mounted
Slotted mask; striped screen
Inline gun
Internal magnetic shielding (supplemented by external degaussing)
Faceplate filter glass, light transmission approx. 70 %
Heliochrom offers a higher brightness at same contrast ratio.
Implosion protected (tension band)
Push-through presentation
Weight approx. 12,3 kg

Deflection yoke

Toroidal winding vertical and saddle winding horizontal
The deflection yoke is adjusted and set during manufacture for optimum dynamic convergence, colour and white purity.

Multi-pole unit

A permanently magnetised ring pair for colour purity.
Two permanently magnetised ring pairs for static convergence.

The multi-pole unit is adjusted during manufacture for optimum colour and white purity and for static convergence.

Maximum Ratings

Heater voltage	U_f	Optimum cathode life time is achieved by stabilization of the heater voltage at 6.3 V. Continued over or under heating by 0.2 V is harmless. The absolute maximum rating is ± 10 %, but may only be applied for short periods whereby the long-term average value should be ± 0.2 V.	
Anode voltage	$U_{a\ max.}$		27.5 kV (abs. value)
	$U_{a\ min.}$		20 kV
Anode current	$I_{a\ max.}$		1.0 mA
Focusing voltage	$U_{g3\ max}$		6 kV
Screen grid voltage	$U_{g2\ p\ max}$		1 kV
Peak voltage between cathode and grid No. 1	$(-U_k)_{p\ max}$		2 V
	$U_{k\ p\ max}$		400 V
Voltage between cathode and grid No. 1	$(-U_k)max$		0 V
	$U_{k\ max}$		200 V
Peak voltage between cathode and heater	$U_{-fk\ p\ max}$		200 V
	$U_{+fk\ p\ max}$		200 V
Voltage between cathode and heater	$U_{-fk\ max}$		450 V*
	$U_{-fk\ max}$		200 V
	$U_{+fk\ max}$		0 V

* During warm-up period of max. 15 sec. the voltage between cathode and heater may increase to max. 450 V. Between 15 and 45 seconds after switch-on the voltage must decrease proportionally with time to max. 200 V

Shock acceleration during transport and handling	max.	350 m/s^2

Typical operating conditions

Unless otherwise stated, the following conditions apply:

1. Heater voltage U_f = 6.3 V
2. All voltages are referenced to grid No. 1
3. Voltage of grid No. 2 is equal to that of the measured grid No. 2 cutoff voltage.
4. Voltage of grid No. 3 is set for optimum sharpness of definition.
5. The colour coordinates for white are: x = 0,313; y = 0,329

Criterion	Value	Maximum rating
Heating current	U_f = 6.3 V	appr. 0.680 A
Heater-cathode leakage current	Grid Nos. 1, 2 and 3 connected to the cathode measured, and set at + 300 V above heater voltage U_a = 0 V	max. 90 µA
Heating time	U_f = 6.3 V. Internal resistance of power source <0,1Ω (constant power soucre with current limitation >6 A). The time measured is that between switch-on of heater and appearance of a clean recognizable picture (cross-hatch or colour bars), which does not need to be focused. All other settings of the picture tube meet the application in the TV-set at central position of regulators for contrast and brightness.	max. 6 s
Anode leakage current	$(-U_{g1})$ = 150 V; U_a = 27.5 kV	max. 45 µA
Grid No. 3 leakage current	$(-U_{g1})$ = 150 V; U_a = 27.5 kV	± 15 µA
Grid No. 2 leakage current	$(-U_{g1})$ = 450 V; U_a = 27.5 kV U_{g2} = 1000 V	± 5 µA
Grid No. 1 leakage	$(-U_{g1})$ = 150 V; U_a = 27.5 kV	± 5 µA

75.3388 (17-05)
„Saflr-Normdruck" 08 6332 73

Flashovers	$(-U_{g1}) = 150$ V; $U_{g2} = 0$ V $U_{g3} = 6$ kV; $U_k = 0$ V $U_a = 27.5$ kV	max. 2 in 1 min max. 5 in 15 min with no pile up
Stray emission	Horizontal and vertical deflection switched on or horizontal deflection only switched on. $(-U_{g1}) = 150$ V; $U_{g2} = 0$ V $U_{g3} = 6$ kV; $U_a = 27.5$ kV	no visible brightening
Focusing voltage	$(-U_{g1}) = 100$ V; $U_a = 25$ kV $I_{a\,p} = 1000$ µA Test picture = grid pattern	4.2...5.0 kV or 16.8...20 % of final accelerator voltage
Focusing voltage difference RGB	Setting as for focusing voltage white, however, U_{g3} is adjusted for the best overall sharpness for each colour, and the diffence between the max. and min. voltages for the three colours must be determined.	max. 300 V
Grid No. 2 cutoff voltage	$(-U_{g1}) = 100$ V; $U_a = 25$ kV With only horizontal deflection connected (U_k of the system under test at 0 V, the other two cathodes at 200 V). U_{g2} should be adjusted so that the horizontal line is still just visible.	153...380 V
Cathode cutoff quotient	$U_a = 25$ kV; with only horizontal deflection connected, the three cathodes set at a higher voltage (max 200 V) than grid No. 1; then U_{g2} is adjusted so that the horizontal line of one colour (red, green or blue) is still just visible; then reduce the voltage of the other two cathodes until the corresponding lines just become visible. Finally, the quotient between the max. and min. cathode voltages (all three colours) must be determined.	max. 1.50

Maximum cathode current (emission)	Adjustment as with grid No.2 cutoff voltage, but with $(-U_{g1})$ = 100 V. Connect vertical deflection, then connect grid No.1 to the test cathode for a maximum of 10 sec. and measure the cathode current.	min. 2.1 mA
Grid No. 1 capacitance	Between grid No. 1 and all other electrodes	appr. 15 pF
Cathode capacitance	From each cathode to all other electrodes	appr. 5 pF
Grid No. 3 capacitance	Between grid No. 3 and all other electrodes	appr. 6 pF
Anode capacitance	Between anode and external conductive coating	1500...2300 pF
Tension band capacitance	Between anode and tension band	appr. 250 pF
Resistance of external conductive coating	Resistance between two points 50 mm apart; measured with curved surface contacts (r=5mm)	max. 2 KΩ
Resistance of tension band-external conductive coating		min. 50 MΩ
Voltage stability tension band-external conductive coating		min. 5 kV
X-rays	U_a = 27.5 kV; I_k = 1 mA dosage measured at a distance of 50 mm from the glass surface	max. 36 pA/kg (0.5 mR/h)
Diagonal deflection angle		appr. 90°
Horizontal deflection angle		appr. 78°
Vertical deflection angle		appr. 60°
Convergence error	U_a = 25 kV; $I_{k\,p}$ = 700 µA white Test picture = grid pattern	

Measuring points:

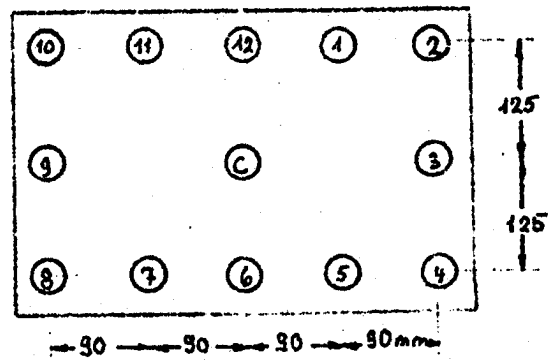

Measured: The horizontal and vertical distance between the centres of two related different coloured grid lines. Centre determined as the brigtest point within the line width.

Measuring point: screen centre	Red - green - blue	max. 0.4 mm
Measuring points: 3; 6; 9; 12	Red - green Blue - red or green	max. 1.0 mm max. 1.3 mm
Measuring points: 2; 4; 8; 10	Red - green Blue - red or green	max. 1.5 mm max. 1.8 mm
Measuring points: 1; 5; 7; 11	Red - green Blue - red or green	max. 1.4 mm max. 1.5 mm
Raster twisting	Angle between electronically traced horizontal axis and mechanical axis	max. 1° (corresp. 3.5 mm at screen edge)
Raster shift	U_a = 25 kV, horizontal and vertical deflection disconnected; I_k is adjusted to give a light spot that is still just visible, and the horizontal and vertical deflection of the spot measured from the mechanical screen centre	horizontal max. 6.35 mm vertical max. 6.35 mm
White uniformity	U_a = 25 kV, test picture = white raster with appr. 5 cd; viewing distance 2 m	no conspicuous discolouring of white visible
Colour purity	Connection as for white uniformity, but in each case only one colour switched on; viewing distance 2 m	no extraneous colour visible with the naked eye

Screen

Light transmission		appr. 70 %
Colour		neutral
Surface		polished
Mutual distance between stripe centres at centre of screen		appr. 0.82 mm
Colour coordinates	Red x = 0.63 y = 0.34 Green x = 0.30 y = 0.60 Blue x = 0.15 y = 0.06	
Ratio of cathode currents for white (x = 0.318; y = 0.329)	Red to blue Red to green	1.15...2.05 0.95...1.70
Typical total cathode current to produce white (x = 0.313; y = 0.329)		Red 41 % Green 33 % Blue 26 %
Phosphorescent persistence		medium-short

Dot-shaped screen and glass faults

Zone A refers to the central field of 213 x 165 mm.

Zone B refers to the remain screen area.

Observation of the fault through grey filters with densities of 0.7 and 1.3 from a distance of min. 60 cm.

High contrast:

The visibility of the fault is maintained between change from 0.7 to 1.3 filter.

Medium contrast:

The fault disappears between change from o.7 to 1.3 filter.

For non-circular faults, the equivalent fault size is: Length plus width divided by two

Missing or non-illuminating phosphor dots are evaluated as for dot-shaped faults.

Permissible are:	Faults with high contrast			Faults with high and medium contrast		
Fault size in mm	Max. in zone A	Max. in zones A + B	Min.dist. between 2 faults	Max. in zone A	Max. in zones A + B	Min. dist. between 2 faults
> 3.2	0	0		0	0	
1.8...3.2	0	0		1	2	50 mm
1.3...1.8	0	1		2	3	25 mm
0.5...1.3	2	2	50 mm	4	6	5 faults in periphery of 50 mm
0.3...0.5	4	8	6 faults in periphery of 50 mm	as for faults < 0.3		

< 0.3 Any quantity of faults permissible so long as no conspicuous clouding or discolouring is visible from a distance of 1 m.

Glass scratches

Permissible are	Width mm	Length mm	Min. distance between 2 scratches mm
	< 0.05	unlimited	
	0.05...0.10	50	19
	0.10...0.15	13	45

The sum of the lengths of all scratches with widths from 0.05 to 0.15 mm is max. 180 mm.

General

For stand-by heating, a heater voltage of 4,5 to 5 V is recommended .

To reduce the possibility of damage to the tube or circuit by internal high voltage flashovers, spark gaps should be used and the connection with the external conductive coating should be made using the shortest possible leads.

The connection to the external conductive coating should be made over a large surface area.

In order to conserve the optimal factory adjustments of the colour purity and convergence, it is necessary to degauss the tube completly.*

During transport and handling of the tube, the neck components must not be mechanically strained. Even slight changes of positioning or adjustments, also deformation of the coils, can have a large effect on colour purity and convergence.

*Reccmmendation for degaussing in separate description.

75 3369 (17-05)
„Safir-Nachdruck" 06 6332 73

CUTOFF-DESIGN-CHART

U_{g4g5a} = 21...25 kV

U_{g3} adjusted for optimum focus

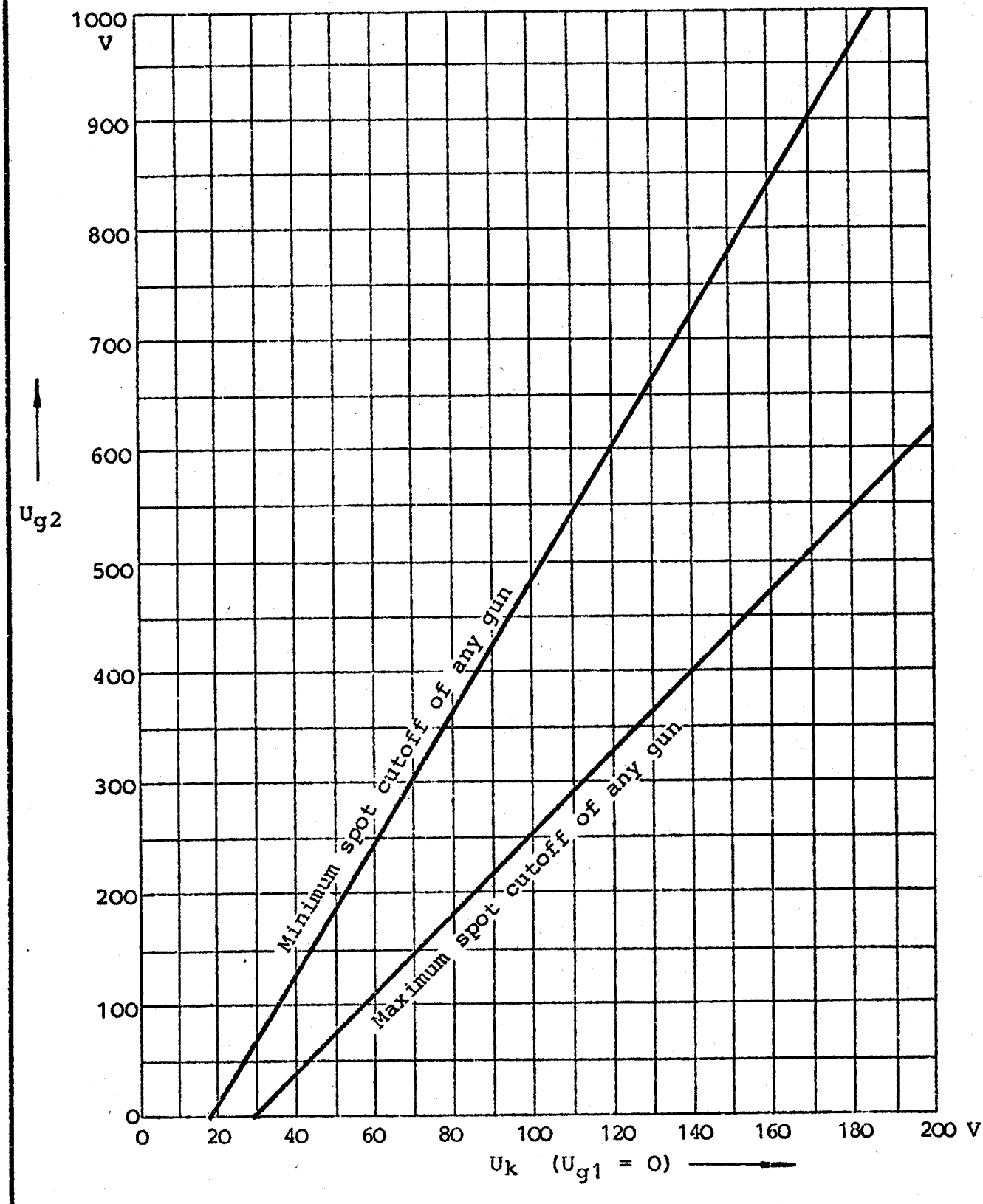

CATHODE-DRIVE-CHARACTERISTICS

U_f = 6.3 V

U_{g4g5a} = 25 kV

U_{g3} adjusted for optimum focus

Parameter: cutoff voltage

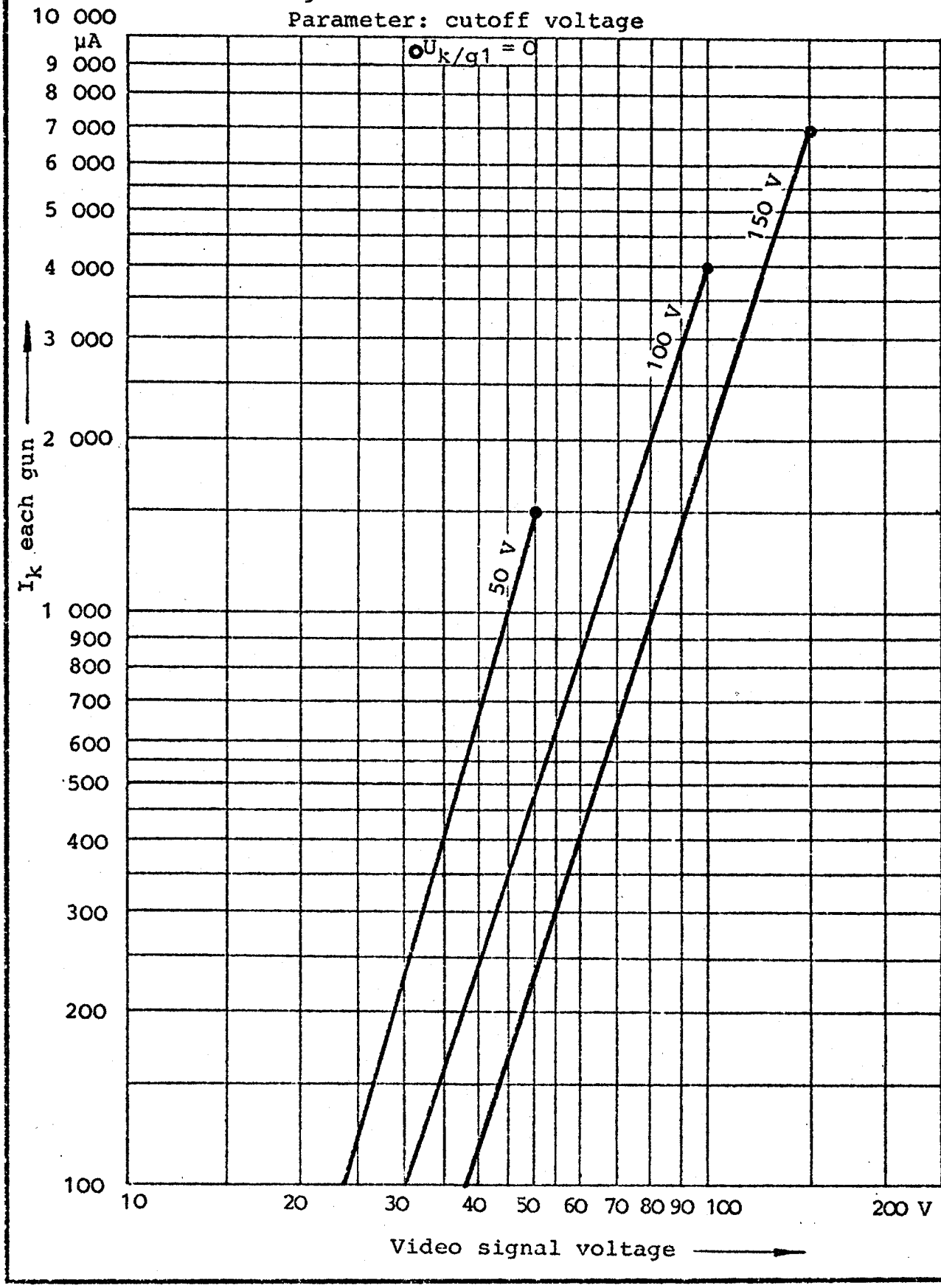

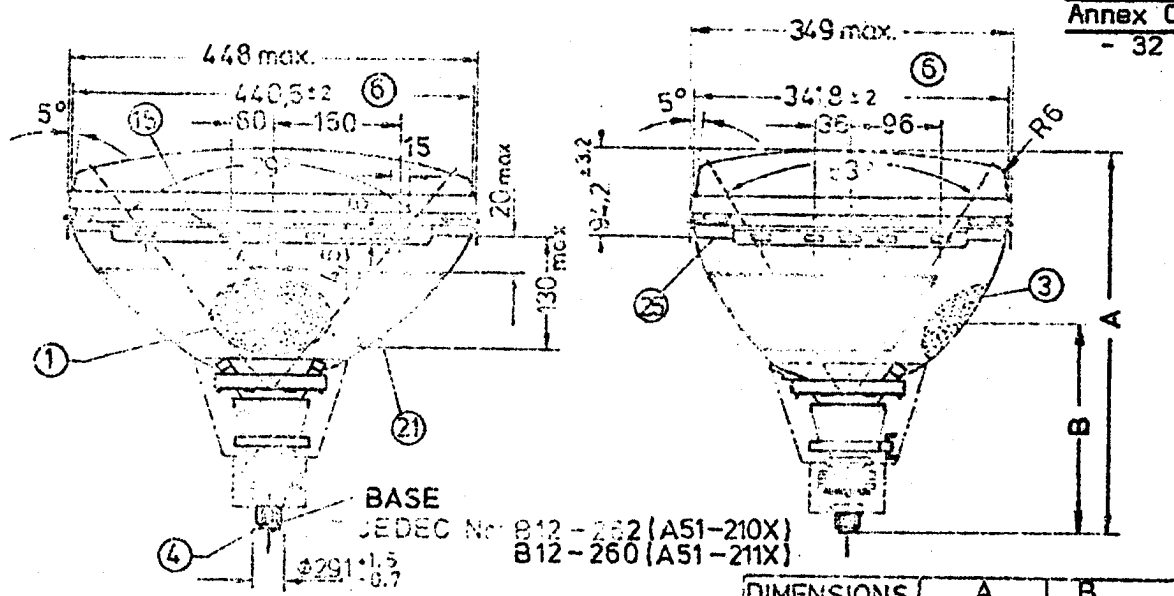

DIMENSIONS	A	B
A51-210X	423,6±9,5	236,8±4,8
A51-211X	426,8±9,5	240±4,8

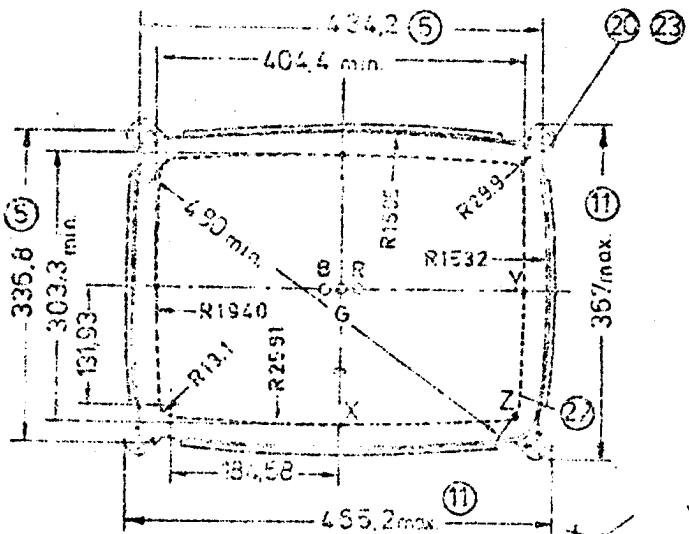

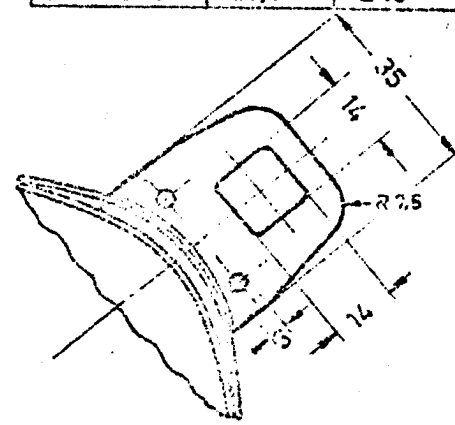

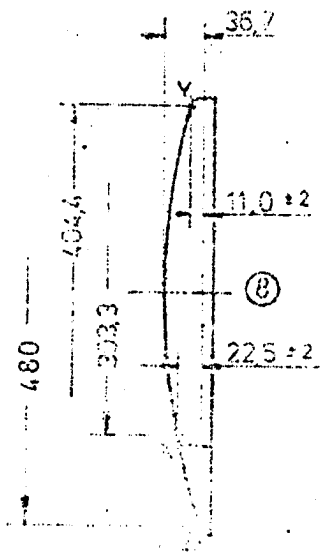

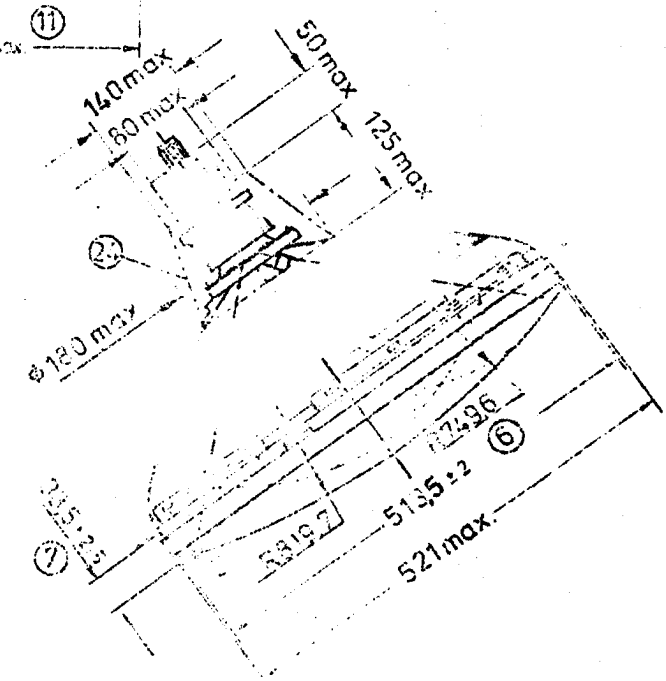

Notes (dimensional drawing)

1. Anode cavity 7.92 according to the German Industrial Standard DIN 41543 (JEDEC No. J 1 - 21)

3. This area is free of external conductive coating and must be kept clean.

4. The tube base will fall within a tolerance circle of max. 55 mm diameter, with respect to the tube axis. The socket should not be rigidly mounted but must be connected by flexible leads.

5. Nominal dimensions of the mounting bolts. For the bolts a free passage of at least 8.5 mm diameter is guaranteed in normal mounting position.

6. Dimensions of the bulb, measured at the front edge of the implosion protection.

7. The maximum deviation between one screenside angle-seating and a plane through the other three angle-seatings will not exceed 2 mm.

8. The Z points are reference points for the vertical position of the X and Y points. The dimensions for the position of the X, Y and Z points also apply to the border line of the minimum useful screen area.

11. The outer limitation of the mounting lugs lies within these maximal dimensions.

15. Mounting holes for degaussing coils.

20. Tension band and external coating are galvanically separated from each other. They may be connected mutually if it is allowed by the effective safety rules. The impedance between tension band and the external coating must not exceed 1 MΩ at 50 Hz and 5 kΩ at 15 kHz.

21 The external conductive coating of the tube must be connected with the negative high voltage terminal.

22. Minimum useful screen area.

23. Bare metal on all sides.

24. This space is to be kept free of other magnetic material in order to reduce negative effects on the tube properties (convergence, incorrect beam landing).

25. Frit seal.

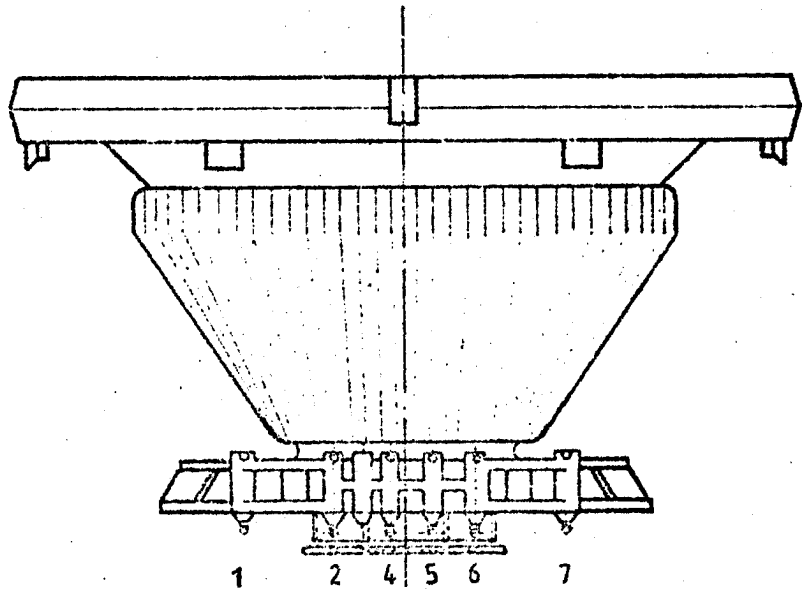

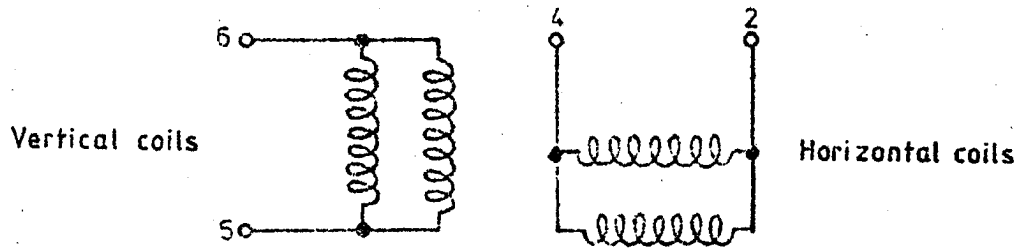

Deflection yoke

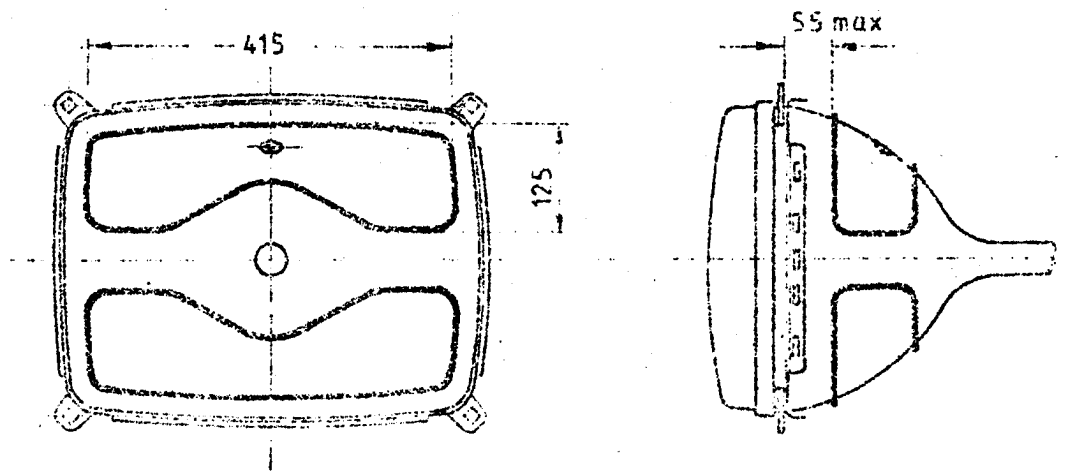

Placement of degaussing coils

Colour deflection yoke

Horizontal deflection coils:

Inductance	at 1 V and 1 kHz	1.63 mH ± 4 %
Resistance	at 20°C = 293 K	1.73 Ω ± 10 %
Deflection current peak to peak	at 25 kV and 102 % picture width	3.5 A

Vertical deflection coils:

Inductance	at 1 V and 1 kHz	30.0 mH ± 10 %
Resistance	at 20°C = 293 K	15.0 Ω ± 10 %
Deflection current peak to peak	at 25 kV and 102 % picture width	0.9 A

Limiting Values:

Horizontal deflection coils	Peak pulse voltage across horizontal coils at 15.750 Hz for pulse duration of 12 µsec	max. 1.4 kV
Vertical deflection coils	Peak pulse voltage across vertical coils at 50 Hz for pulse duration of 0.7 msec	max. 200 V
	Peak pulse voltage inclusive DC component between horizontal and vertical coils	max. 1.4 kV

29 JUIN 1976

	RECTANGULAR COLOUR PICTURE TUBE	A67-510X 26" -Preliminary-

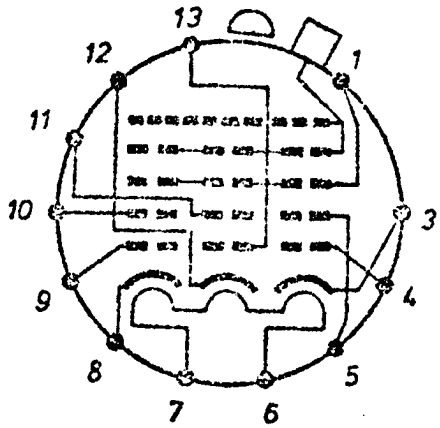

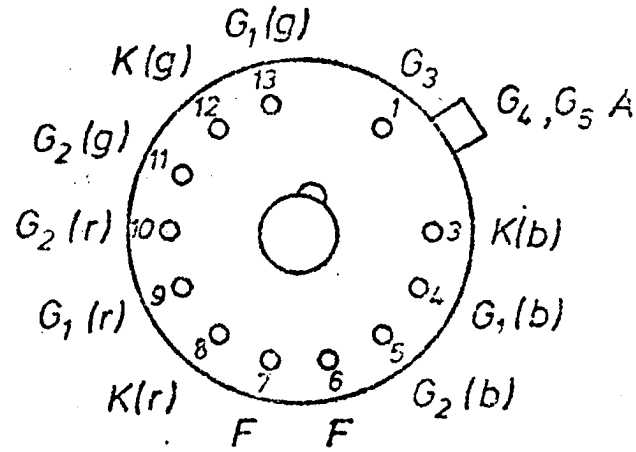

Technical Data 14 pages.
Alterations reserved.

DESCRIPTION

The ITT-Picture Tube A 67-510 X is a rectangular colour picture tube with 110° deflection angle and 29 mm neck diameter.

The useful screen area of 2100 cm^2 (appr.) has nearly straight sides of 53x40 cm (appr.) with 3x4 aspect ratio. The filterglass of the faceplate has a light transmission of 49,5 % (appr.).

The phosphor screen is composed of triangular dot groups - colour triplets - each consisting of a red-, green- and blue-emitting phosphor dot. The green- and blue-emitting phophors utilize silver activated sulfide phosphors, the red emitting phosphor is composed of yttrium compounds activated with rare-earths.

The tube utilizes three electrostatic-focus guns and is operating according to the shadow mask principle.

The gun axes are tilted slightly towards the tube axis to facilitate convergence to the shadow mask. Beam-convergence and deflection are provided magnetically.

1. MECHANICAL DATA

Bulb	All-glass Type with rectangular Spherical Faceplate Filterglass	
Implosion Protection	Steel-Jacket including Tube Mount	
Minimum Useful Screen Dimensions		
Aspect Ratio 3x4	Diagonal	626 mm
	Horizontal	528 mm
	Vertical	396 mm
Deflection Angles	Diagonal	110°
	Horizontal	97°
	Vertical	77°
Weight	20 kg (appr.)	
Base	JEDEC B 12-260	

ANNEX
ML-TE
CRT75/02-03
- 17 -

A67-510X

2. ELECTRICAL DATA

2.1. TYPICAL OPERATING CONDITIONS[1)]

Heater Voltage	U_f	6.3[2)]	volts
Heater Current appr.	I_f	730	ma
Anode Voltage	U_{g4g5a}	25,000	volts
Focusing Voltage	U_{g3}	4,200...5,000	volts
Grid-No. 2 Cutoff Voltage[3)4)] (at $(-U_{g1})$ = 105 V)	U_{g2} cutoff	160...445	volts
Grid-No. 1 Cutoff Voltage[4)] (at U_{g2} = 300 V)	$(-U_{g1})$ cutoff	76...162	volts
Heating Time[11)]		(Approx.) 5	s

2.2. MAXIMUM RATINGS[1)]

Anode			
Voltage	U_{g4g5a} max	27,500[6)]	volts
	U_{g4g5a} min	20,000	volts
Current[5)]	I_{g4g5a} max	1,000	µ amps
Focusing Electrode			
Voltage	U_{g3} max	6,000	volts
Grid-No. 2			
Peak Voltage	U_{g2} p max	1,000	volts
Grid-No. 1			
Negative Peak Voltage	$(-U_{g1})$ p max	400	volts
Negative Operating Cutoff Value	$(-U_{g1})$ max	200	volts
Positive-Bias Value	U_{g1} max	0	volts
Positive-Peak Value	U_{g1} p max	2	volts
Heater/Cathode[8)]			
Voltage[9)]	$U_{-f/k}$ max	450[10)]	volts
	$U_{-f/k}$ max	200	volts
	$U_{-f/k}$ p max	200	volts
	$U_{+f/k}$ p max	200	volts
	$U_{+f/k}$ max	0	volts

Notes see page 3

75. 3388 M7-061
„Safir-Hausdruck" g 03 6154 67

A67-510X

2.3. RATINGS FOR CIRCUIT DESIGN

Leakage current[7]	I_{g3}	$\leq \pm 15$	μ amps
	I_{g2}	$\leq \pm 5$	μ amps
	I_{g1} $(-U_{g1} = 150\ V)$	$\leq \pm 5$	μ amps

NOTES FOR PAGE 2 AND 3

1) For grid drive service. Voltage values are for each gun and refer to cathode potential.

2) Maximum heater voltage tolerance of ± 10 % is admissible. For maximum cathode life, it is recommended to regulate heater supply to 6.3 volts.

3) Maximum ratio of Grid-No. 2 cutoff voltages, Highest Gun to Lowest Gun in any tube will not exceed the value of 1.86 at the same Grid-No. 1 voltage.

4) Visual extinction of focused spot (see Cutoff Design Chart p. 8).

   Relation: Line cutoff = Spot cutoff x 1.01 + 1 volts
   Raster cutoff = Spot cutoff x 1.05 + 7 volts

5) Due to a higher total anode current of longer duration, deformation of the shadow mask may be effected, causing colour impurities. To avoid this effect, a limitation of the total anode current to 1.5 ma is practically sufficient.

6) Design-Maximum Rating should not be exceeded under the worst probable operating conditions.

7) These values indicate the permissible leakage currents of the electrodes concerned. The circuit must be designed in such a manner that the voltages applied are not substantially altered by these currents.

8) The equipment should be designed mechanically and electrically so that in consequence of an internal arc no power sources allone or in combination will cause a discharge current across the heater exceeding 750 ma.
   Such current limitation will prevent heater burnout.

9) To avoid picture distortions, the interference from the heater must be kept as low as possible. Therefore, the AC voltage between heater and cathode shall not exceed the value $U_{f/k\ rms} = 20$ volts.

10) During warm-up period not exceeding 15 seconds $U_{-f/k\ max}$ may increase to 450 volts; within 15 and 45 seconds this value must decrease at least gradually to 200 volts.

11) By using a short time heater cathode the picture will appear in 5 seconds approx., when applying a constant heater voltage.

2.4. CAPACITANCES (Appr.)

Grid-No. 1 of any gun to all other electrodes	c_{g1}	3,8	pF
Cathode of any gun to all other electrodes	c_k	6,3	pF
Grid-No. 3 to all other electrodes	c_{g3}	2,6	pF
Anode to external conductive coating	$c_{g4g5a/m\ max}$	2,500	pF
	$c_{g4g5a/m\ min}$	2,000	pF
Anode to steel-reinforcement	$c_{g4g5a/m'}$	450	pF

3. OPTICAL DATA

Faceplate: Filterglass
Light Transmission (appr.) 49,5 %

Screen: Aspect Ratio 3x4.
Three separate phosphor dots - Colourtriplets - arranged in Triangular groups, aluminized.
Spacing between centres of adjacent Triplets nearest centre of screen 0.66 mm

Colour dot Coordinates	x	y
Red	0.630	0.340
Green	0.300	0.600
Blue	0.150	0.060
Coordinates for White	0.281	0.311

Average percentage of total cathode current to produce White

Red	34 %
Green	34 %
Blue	32 %

Ratio of cathode currents for White

Red to Green	1.0	(0.65...1.5)
Red to Blue	1.1.	(0.75...1.5)
Blue to Green	0.9	(0.6....1.3)

4. GENERAL CONSIDERATIONS

X-RADIATION

At the maximum permissible anode voltage of 27.5 kilovolts and a total anode current of 1.0 milliamps, X-Radiation will not exceed the permissible value of 0.5 mR/h.

MOUNTING INFORMATION

Orientation
The tube must be operated with the tube axis in a horizontal position and with the blue gun up. This is the operating position to which refer the specified beam displacement and convergence correction values.
The deflecting yoke should not be used for supporting the picture tube.

Socket
Socket should not be rigidly mounted but connected by flexible leads. The base may be located within a circle of 51 mm diameter, concentric with the perpendicular line through the centre of screen.

Steel-reinforcement
Mounting angles of the steel-jacket may be used for fixing the tube in the receiver. Corresponding data see drawing p. 12.

External conductive coating
Contact to the external conductive coating should be made by multiple fingers to prevent localized overheating.

Steel jacket and external conductive coating are separated galvanically against each other. They may be connected mutually if it is allowed by the effective safety rules.

The impedance between steel jacket and external conductive coating must not exceed 1 MΩ at 50 Hz and 5 kΩ at 15 kHz.

Anode contact
The area round the anode contact is coated with water-repellent insulating layer, to clean it wipe only with soft dry lintless cloth.

5. APPLICATION DATA

Reference potential
Unless otherwise specified, voltage values are for each gun and are positive with respect to cathode.

Focusing Electrode
Focusing voltage for optimum focus is 17...20 % of anode voltage.

Low voltage adjustment
Grid-No. 2 and Grid-No. 1 voltages for visual extinction of focused spot are shown in the Cutoff Design Chart p. 8.

Beam landing correction
In spite of internal magnetic shield and due to manufacturing variations which may produce misregister, it is necessary for pure colour operation to correct for remaining magnetic effects and for manufacturing variations by an additional static magnetic field (purifying magnet).

Displacements, measured at centre of screen:

Raster displacement:	max	12 mm
Lateral convergence displacement:		
blue beam with respect to converged red and green beams	max ±	5 mm
Radial convergence displacement:		
excluding effects of dynamic convergence (each beam)	max ±	8 mm

The additional deflecting components may be arranged according to the drawing on page 14.

Grounding
The external conductive coating is to connect with the negative high voltage terminal.

Arc-over protection
In order to minimize the possibility of tube damage caused by an internal arc, it is recommended to limit the high voltage power for anode and grid-No. 3 and to apply protective gaps.

Maximum ratings
The network is to lay out in such a manner that the tabulated data should not be exceeded during life, even under the worst probable operating conditions with respect to supply-voltage variation, equipment component variation or signal and environmental conditions. The high voltage limiting values are of absolute maximum rating type, which are not to exceed initially and throughout life.
The picture tube must not be connected until the high tension has been adjusted within the limiting values.

6. COMPONENT CONSIDERATIONS

Deflecting yoke
The deflecting yoke should not be used for supporting the picture tube. The yoke must be free to move along the neck for a distance of approximately 1.5 cm to enable adjustment of colour purity. The yoke mount should also provide for a small amount of rotational adjustment. Raster may be adjusted by superposition of a DC current of suitable size to the deflecting current within each coil. Pincushion correction may be accomplished by adding the necessary current waveforms to the deflecting current waveforms.

25. 3368 (17-05)
„Sefir-Normdruck" g 03 6154 67

Purifying magnet
The purifying magnet is used to compensate for the effects of uniform extraneous magnetic fields which may affect register. The purifying magnet should be located on the neck according to the instructions shown on p.14. The device should provide a magnetic field perpendicular to the tube axis. The field should be adjustable in magnitude and direction to cause a change of register.

Magnetic shield
The tube is equipped with an internal magnetic metal shield to minimize effects of interferring extraneous magnetic fields. To be effective, the shield and shadow mask must be degaussed. This may be done automatically by means of a degaussing coil when the equipment is switched on.

For optimum degaussing it is necessary to delay the start of vertical deflection until the degaussing current has died out completely. Otherwise an interference of the field for degaussing and a stray field of vertical deflection (deflection yoke) may impress an indefinite magnetical condition to the tube.

Radial converging assembly
The radial converging assembly and associated circuits provide the magnetic fields necessary to converge dynamically the three electron beams as they traverse the screen of the picture tube, and together with the lateral converging magnet it provides the magnetic fields necessary for static convergence. The assembly is mounted on the neck of the picture tube with the three electromagnets centered over the three pairs of internal converging pole pieces. The necessary horizontal and vertical current waveforms are passed through the windings for maintaining convergence of the deflected beams. Static magnetic fields for converging the three beams at the center of the screen are produced by passing direct current through the windings or by permanent magnets with variable intensity or by combination of both.

Lateral converging device
The lateral converging magnet supplements the correction supplied by the radial converging assembly in statically converging the three electron beams at the center of the screen.

The magnetic field should cause a lateral (horizontal) movement of the blue beam opposite to the movement of the converged red and green beams. The magnetic field strength should be adjustable to provide correction of specified tolerance values.

A67-510X

CUTOFF DESIGN CHART

U_{g4g5a} = 20...27.5 kV

U_{g3} ADJUSTED FOR FOCUS

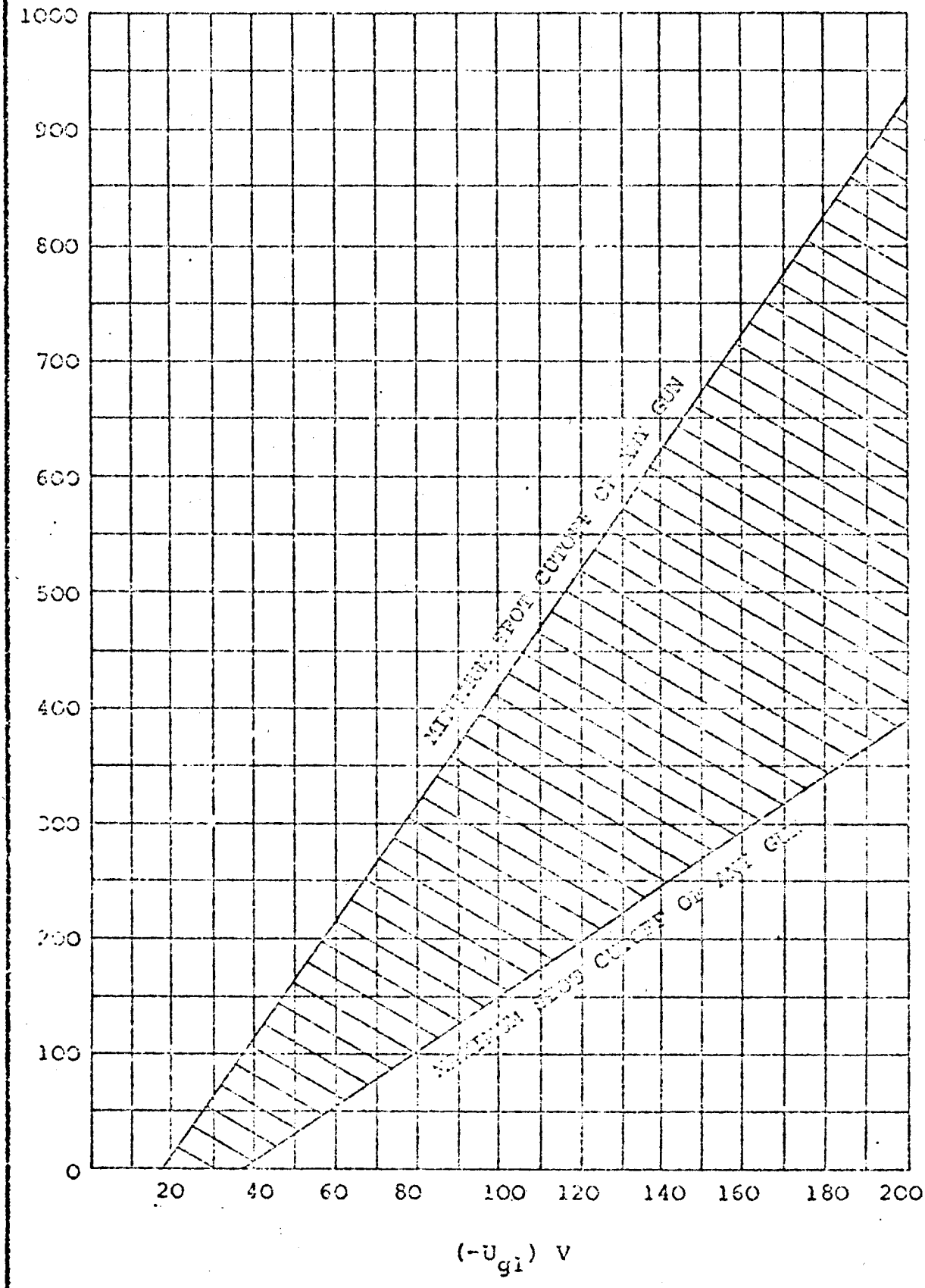

A67-510X

GRID-DRIVE CHARACTERISTIC

U_f = 6,3 V

$U_{g4g5a/k}$ = 20...27,5 kV

$U_{g3/k}$ ADJUSTED FOR FOCUS

$U_{g2/k}$ ADJUSTED FOR EACH GUN TO PROVIDE SPOT CUTOFF FOR DESIRED FIXED ($-U_{g1/k}$)

PARAMETER: CUTOFF VOLTAGE 50, 100, 150, 200 V

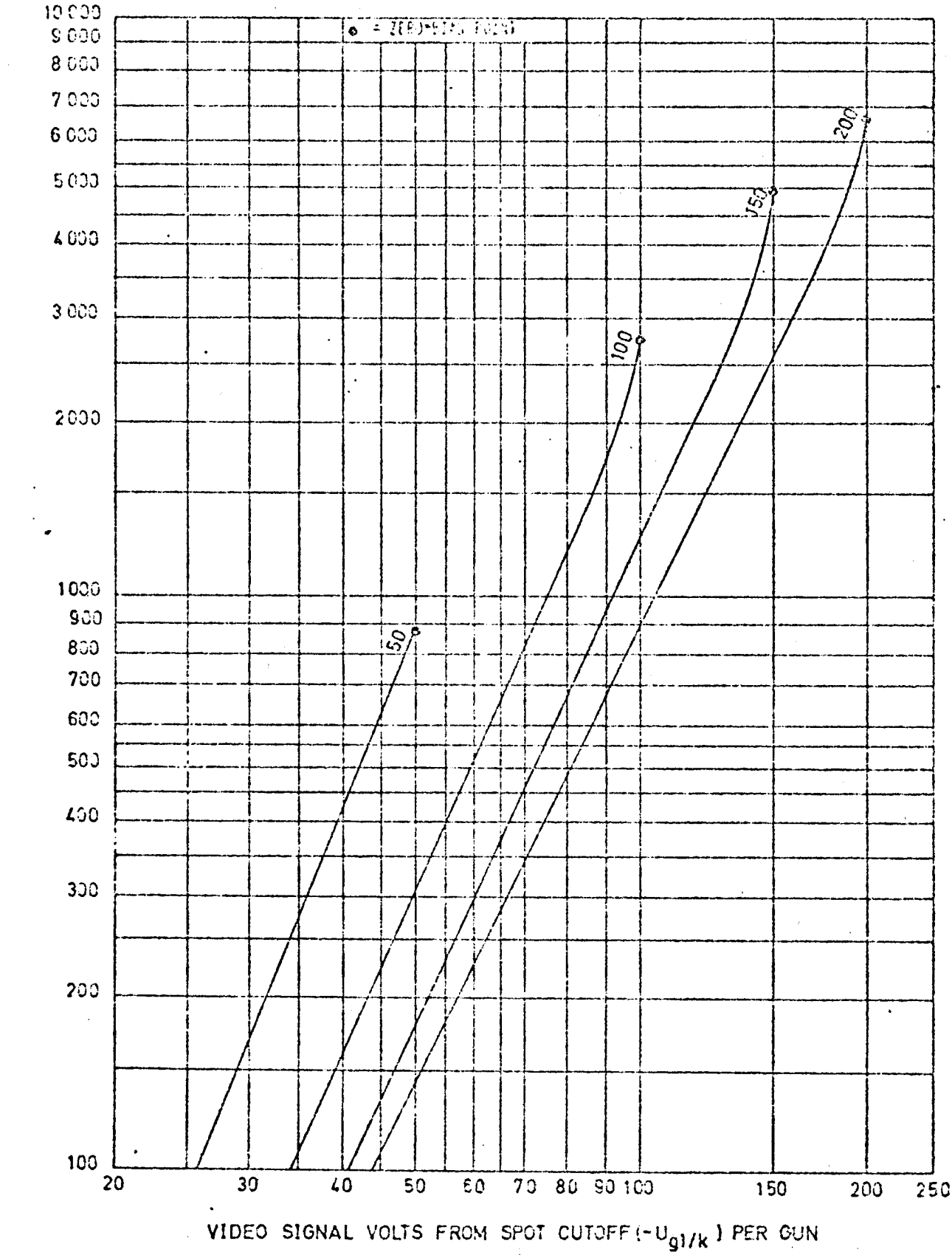

A67-510X

CATHODE - DRIVE CHARACTERISTIC

U_f = 6,3 V

$U_{g4g5a/g1}$ = 20...27,5 kV

$U_{g3/g1}$ ADJUSTED FOR FOCUS

$U_{g2/g1}$ ADJUSTED FOR EACH GUN TO PROVIDE SPOT CUTOFF FOR DESIRED FIXED $U_{k/g1}$

PARAMETER: CUTOFF VOLTAGE 50, 100, 150, 200 V

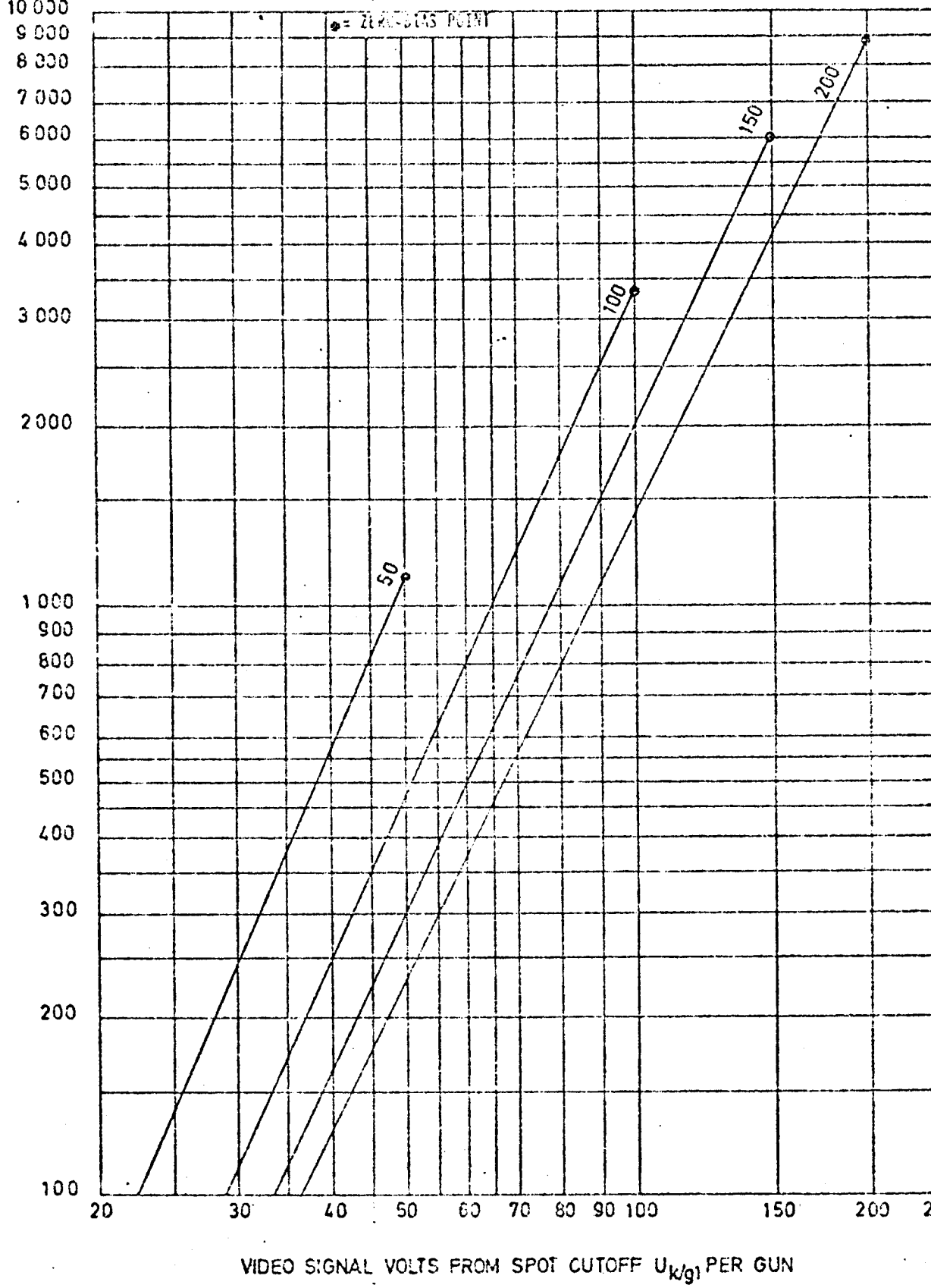

75. 3368 (17-05)
„Sefir-Normdruck" g 03 6104 E7

A67-510X

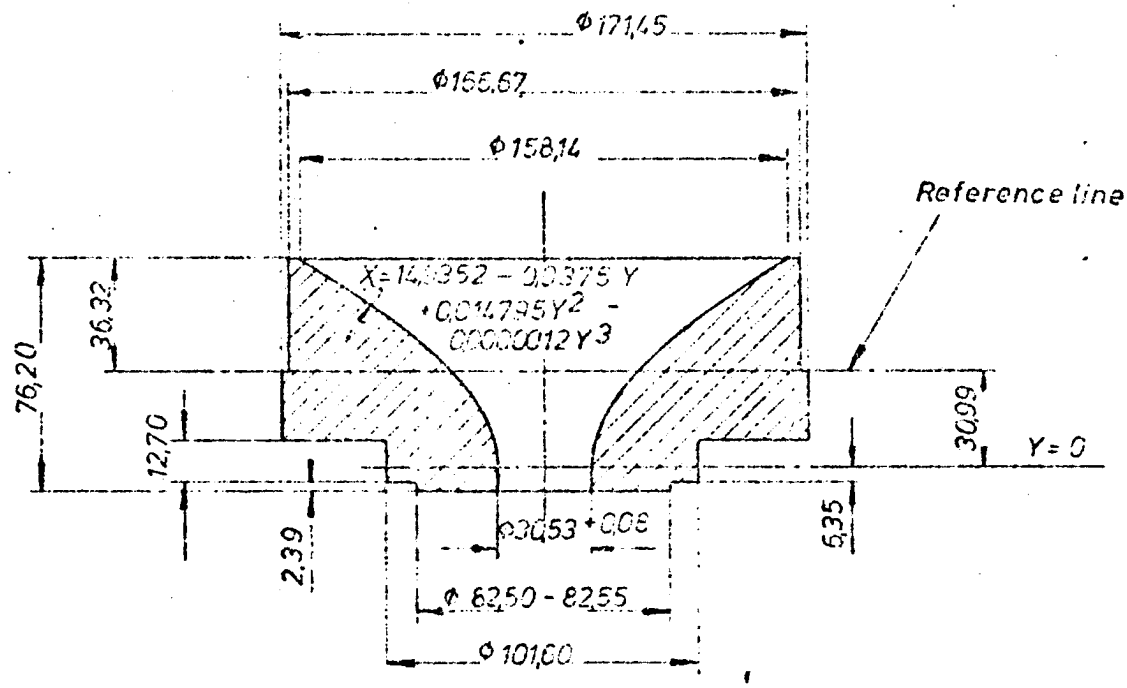

Reference - Line and Neck-Funnel-Contour Gauge

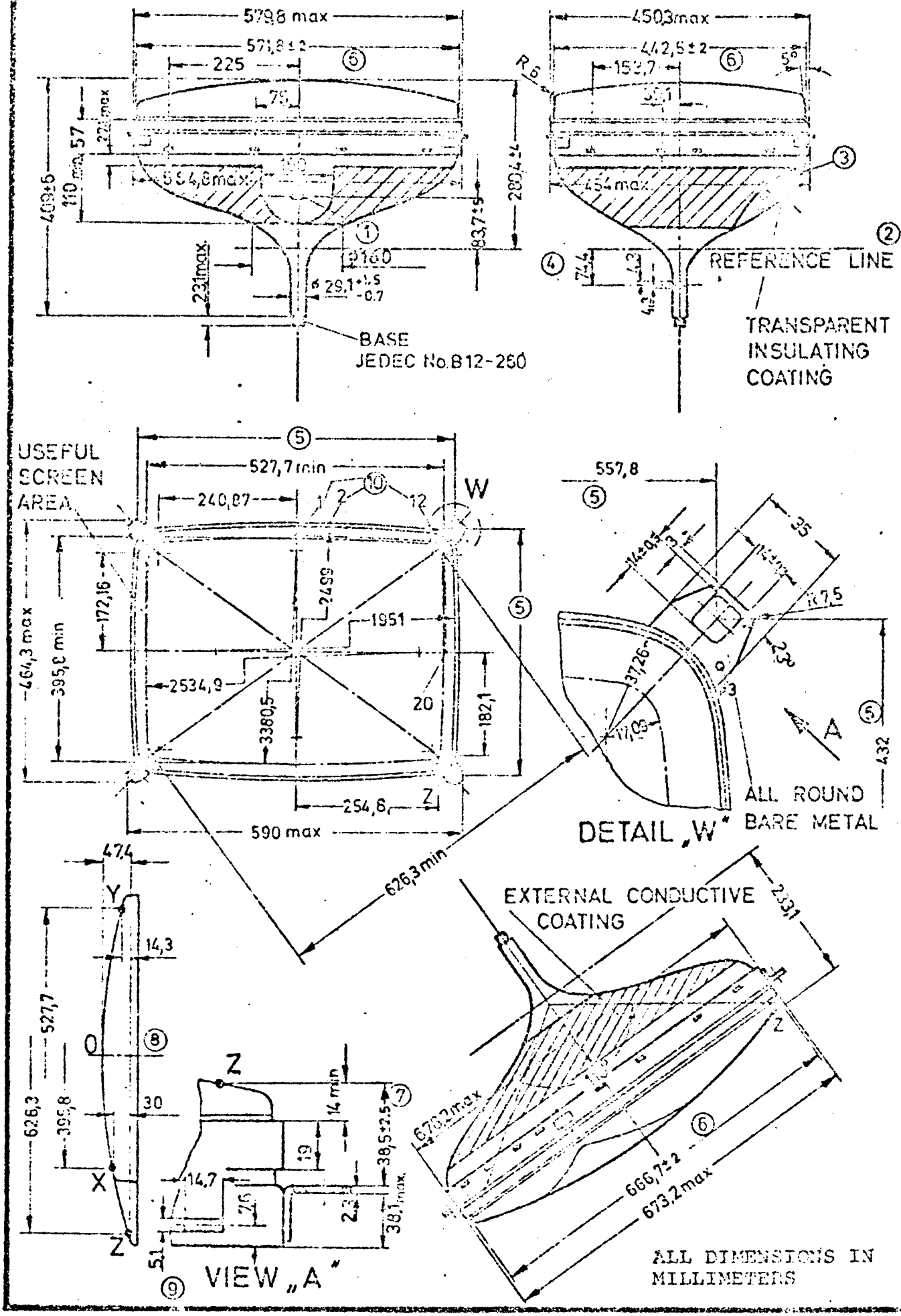
579,8 max
571,8±2
225
75
554,8max
409±6
110 min
57
231max
ø 29,1 +1,5 -0.7
ø160
83,7±5
280,4±4
BASE
JEDEC No.B12-260
450,3max
442,5±2
153,7
R6
5°
454max
74,4
REFERENCE LINE
TRANSPARENT
INSULATING
COATING
USEFUL
SCREEN
AREA
527,7min
240,87
W
464,3 max
395,8 min
172,16
2499
1951
2534,9
3380,5
20
182,1
254,8
Z
590 max
626,3min
557,8
35
R7,5
23°
37,26
17,09
A
432
ALL ROUND
BARE METAL
DETAIL „W"
47,4
Y
14,3
527,7
O
626,3
395,8
30
X
Z
14 min
38,5±2,5
19
14,7
7,6
2,3
38,1max
5,1
VIEW „A"
EXTERNAL CONDUCTIVE
COATING
233,1
676,2max
666,7±2
673,2max
ALL DIMENSIONS IN
MILLIMETERS

NOTES for page 12

1) Cavity cap IEC 67-III-2, JEDEC No. J1-21.

2) Reference line is determined by plane c-c' when gauge is seated against the funnel (s. p.11).

3) This area is free of conductive coating.

4) Location of internal radial-converging pole pieces.

5) For mounting bolts a free passage of at least 9.5 mm diameter at nominal position is ensured.

6) Bulb measure at the front edge of implosion-protection.

7) Maximum deviation between one screenside angle-seating and a plane through the other three angle seating will not exceed 2 mm.

8) The points "Z" are reference points for the location concerning the altitude of the points "X" and "Y".
The dimensions for the location of the points "X", "Y" and "Z" count also for the border line of the minimum useful screen area.

9) Mounting holes for degaussing coils.

10) Panel contour.
Sagittal Heights with reference to centerface at points 3,2 beyond edge of min. screen.

Station No.	Coordinates great axis	small axis	Sagittal height
1	0	201,07	17,91
2	25,40	200,96	18,21
3	50,80	200,69	19,18
4	76,20	200,20	20,73
5	101,60	199,54	22,91
6	127,00	198,68	27,99
7	152,40	197,64	29,11
8	177,80	196,39	33,12
9	203,20	194,87	37,74
10	228,60	193,34	43,00
11	242,32	192,38	46,10
12	(diagonal) 257,35	183,95	48,34
13	261,09	173,53	47,40
14	262,46	152,40	44,32
15	263,86	127,00	41,15
16	265,00	101,60	38,53
17.	265,89	76,20	36,50
18	266,52	50,80	35,05
19	266,90	25,40	34,16
20	267,03	0	33,86

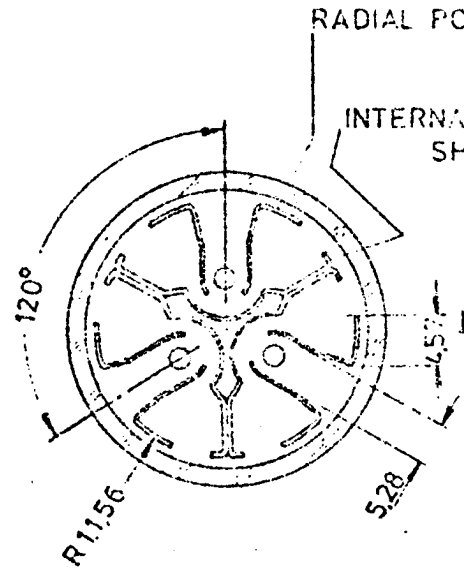

LOCATION OF RADIAL-CONVERGING POLE PIECES

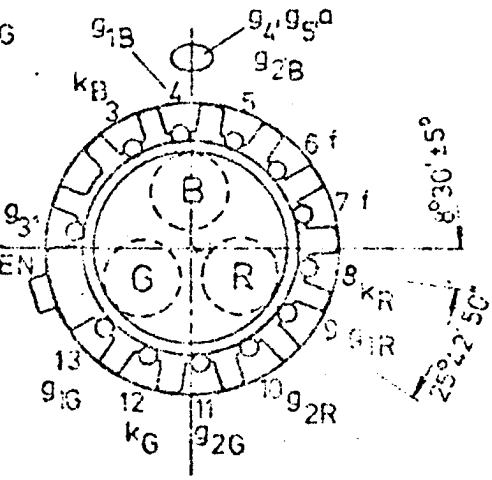

BOTTOM VIEW OF BASE

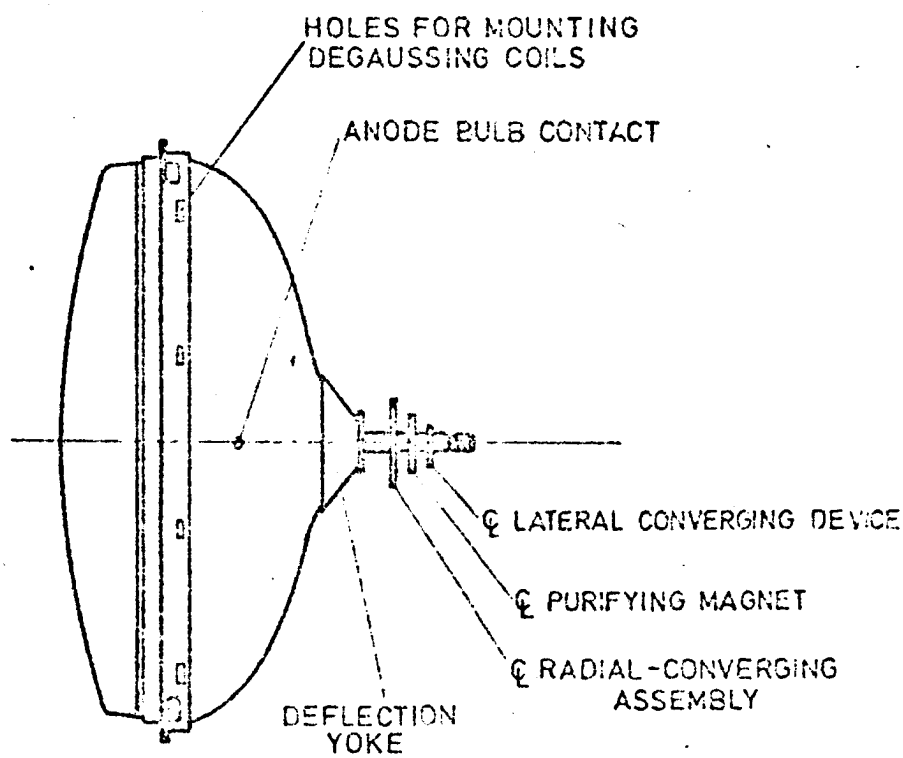

RELATIVE PLACEMENT OF TYPICAL COMPONENTS

DIMENSIONS IN MILLIMETERS

ELECTRON TUBE DEPARTMENT ■ COMPONENTS DIVISION
INTERNATIONAL TELEPHONE AND TELEGRAPH CORPORATION, CLIFTON, NEW JERSEY

D-1027A
POWER
TRIODE

PRELIMINARY SPECIFICATION

DESCRIPTION

The D-1027A is a general purpose metal and ceramic triode for use as an amplifier, oscillator or Class B modulator under CW or pulsed conditions. The anode is capable of dissipating 60 kilowatts during Continuous Commercial Service. Cooling is accomplished by circulating water on the anode and forced air on the ceramic and coaxial seals. The cathode is thoriated tungsten of mesh construction and may be operated on d-c or single phase a-c.

ELECTRICAL

Filament Voltage	11	volts
Filament Current	210	amperes
Filament Starting Current	800	amperes
Filament Heating Time, minimum	15	seconds
Amplification Factor		
E_c = -50 volts; I_b = 3 amperes	17	
Direct Inter-Electrode Capacitance		
Grid-Plate	65	μμf
Grid-Filament	90	μμf
Plate-Filament	5.5	μμf

MECHANICAL

Mounting Position			Vertical	
Type of Cooling			Water and Forced Air	
Water Flow on Anode				
Plate Dissipation	20	40	60	kilowatts
Minimum Water Flow	8	20	30	gpm
Water Jacket Pressure Drop	2	8	15	psi
Max. Outgoing Water Temperature			70°	C
Max. Water Pressure			80	psi
Ceramic and Seal Temperature, max. (Note 1 & 2)			250°	C
Weight, approx.			23	lbs.

Note 1: Auxiliary air flow of up to 150 cfm may be required to limit the ceramic and seal temperature to less than the 250° C maximum.

Note 2: A temperature sensitive lacquer manufactured by the Tempil Corporation, 132 West 22nd St., New York 11, N.Y. is convenient for this measurement.

Radio-Frequency Power Amplifier and Oscillator - Class C Telegraphy
(Key down conditions per tube without amplitude modulation *)

Maximum Ratings, Absolute Values

D-C Plate Voltage	14,000	volts
D-C Grid Voltage	-3,000	volts
D-C Plate Current	12	amperes
D-C Grid Current	1.6	amperes
Plate Input	120	kilowatts
Plate Dissipation	60	kilowatts

Typical Operation	Cathode Drive	Grid Drive		
D-C Plate Voltage	10,000	10,000	12,500	volts
D-C Grid Voltage	-1,100	-1,100	-1,300	volts
Peak R-F Grid Voltage	1,475	1,475	1,650	volts
Peak R-F Plate Voltage	8,000	8,000	10,000	volts
D-C Plate Current	7.4	7.4	7.9	amperes
D-C Grid Current	1.0	1.0	.85	amperes
R-F Load Resistance	690	580	700	ohms
Driving Power, approx.	11,600	1,475	1,400	watts
Power Output, approx.	65	55	72	kilowatts

* Modulation essentially negative may be used if the positive peak of the envelope does not exceed 115 per cent of the carrier conditions.

RATINGS VERSUS FREQUENCY

Maximum ratings apply up to 50 megacycles. The tube may be operated at higher frequencies provided the maximum values of plate voltage and power input are reduced according to the tabulation below (other maximum ratings are the same as above). Special attention should be given to adequate ventilation of the ceramics and seals at these frequencies.

Frequency	50	110	megacycles
Percentage of Maximum Rated Plate Voltage and Plate Input	100	70	per cent

PULSE SERVICE OPERATIONS

In pulse r-f amplifier service, it is possible to operate the tube under conditions not permissible in CW operation. Because of the wide variety of operating conditions, it is advisable that tube operation recommendations be obtained from our Engineering Department for specific conditions.

Additional information for specific applications can be obtained from the:

Electron Tube Applications Section
ITT Components Division
P.O. Box 412
Clifton, New Jersey

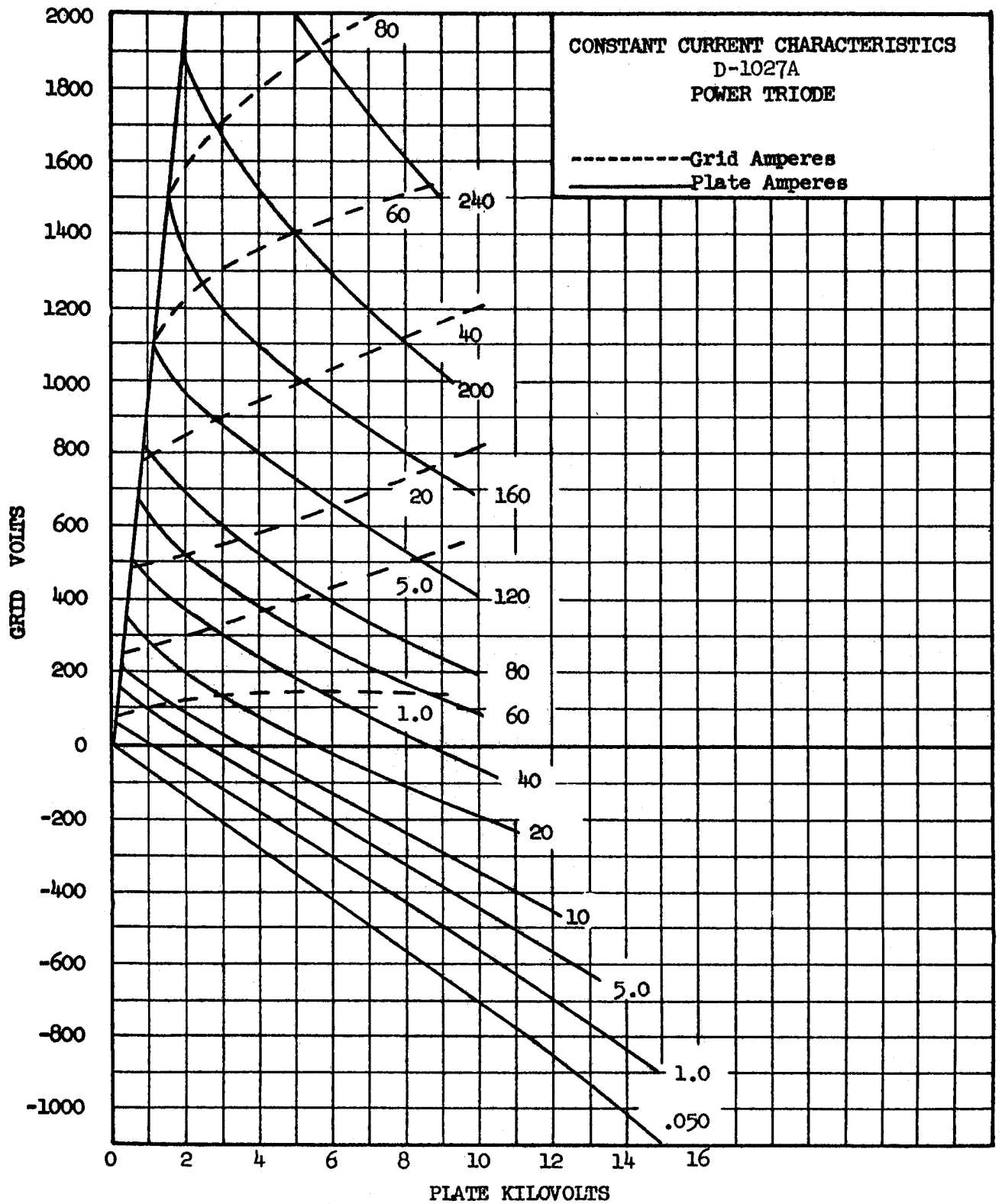
CONSTANT CURRENT CHARACTERISTICS
D-1027A
POWER TRIODE
----------Grid Amperes
——————Plate Amperes
GRID VOLTS
PLATE KILOVOLTS
2000
1800
1600
1400
1200
1000
800
600
400
200
0
-200
-400
-600
-800
-1000
0
2
4
6
8
10
12
14
16
80
60
40
20
5.0
1.0
240
200
160
120
80
60
40
20
10
5.0
1.0
.050

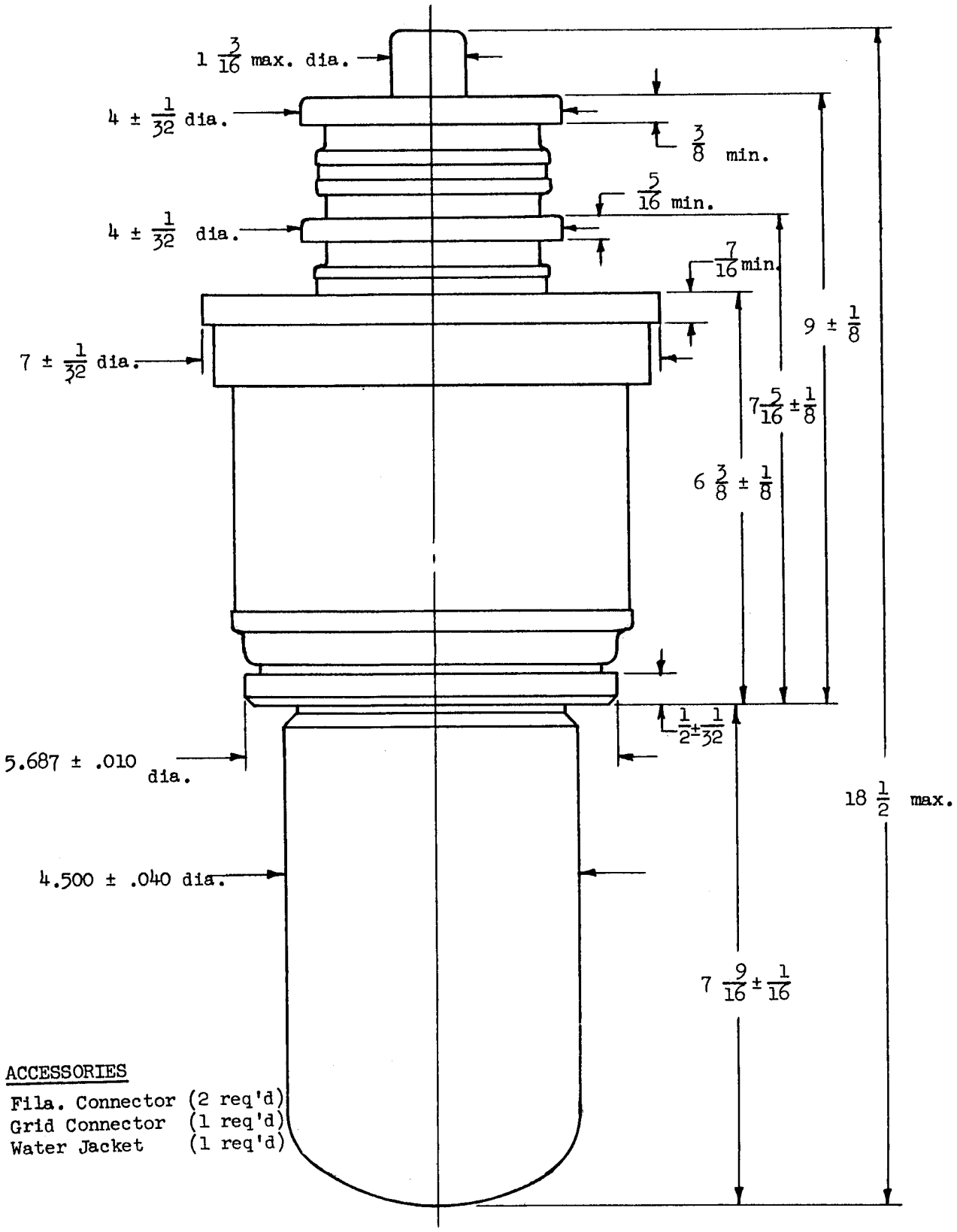

ACCESSORIES

Fila. Connector	(2 req'd)
Grid Connector	(1 req'd)
Water Jacket	(1 req'd)

OUTLINE
D-1027A POWER TRIODE

TENTATIVE

DESCRIPTION:

The D-2009 is a pulse traveling wave amplifier tube mounted integral with a solenoid which provides the magnetic field required to define the path of the electron beam.

The tube is designed for use as a pulsed r-f amplifier in the frequency range of 3950 to 8000 megacycles per second and includes a control grid for pulsing the electron beam.

The D-2009 is of all-metal shell construction and is provided with input and output coaxial cables and connectors for r-f connections.

ELECTRICAL:

Heater for oxide-coated, unipotential cathode		
Voltage	6.3 ±10%	volts
Current	2.5	amperes
Frequency	3950 to 8000	mc
Gain (Note 1)	33	db
Peak Power Output (Note 1)	2	watts
Inter-electrode Capacitance		
Grid to all other electrodes	25	μμfd

MECHANICAL:

Mount		Special
Mounting Position		Any
Base	Moulded Rubber	Flexible Leads
R-F Circuit Connectors		TNC Male
Type of Cooling		Air

MAXIMUM RATINGS:

Cathode Voltage with respect to ground (Note 2)	-2500	volts
Peak Cathode Current	65	ma
Grid Voltage with respect to cathode (Note 3)		
for cut-off (10 db loss minimum through tube)	0	volts, min.
for beam-on	+150	volts, max.
Helix Current (Note 4)	1	ma average
Beam on Duty Cycle	.04	
R-F Power Input	1.0	watt avg.

TYPICAL OPERATION:

Frequency	4500	mc
Cathode Voltage with respect to ground	2350	volts
Peak Cathode Current	55	ma
Grid Voltage with respect to cathode		
Beam cut-off	0	volts
Beam-on	+115	volts
Peak Helix-Current	6	ma
Peak Shell Current	53	ma
Beam on Duty Cycle	.03	
Peak Power Output	4	watts
Gain	35	db
Solenoid voltage	26	volts
Solenoid current	9	amps
Air flow	0.4	lbs/min.

Note 1: Minimum performance over the frequency band of 3950 to 5850 mc is 35 db gain; 25 db gain from 3950 to 8000 mc.

Note 2: Anode and collector are connected internally to the shell, and the outer coaxial conductor of the r-f connections is also at shell potential. The helix is connected to the center conductor of the coax line and a d-c connection to the helix must be provided externally in the r-f circuitry.

Note 3: Positive voltage must not be applied to the grid in the absence of anode voltage.

Note 4: Initial adjustments of voltage and magnetic field may be made at low duty cycles. 1 ma average helix current must not be exceeded at maximum duty cycle (.04).

CAUTION: The solenoid must be in operation before the beam voltage is applied.

Additional information for specific applications can be obtained from the

Electron Tube Applications Section
ITT Components Division
Box 412
Clifton, New Jersey

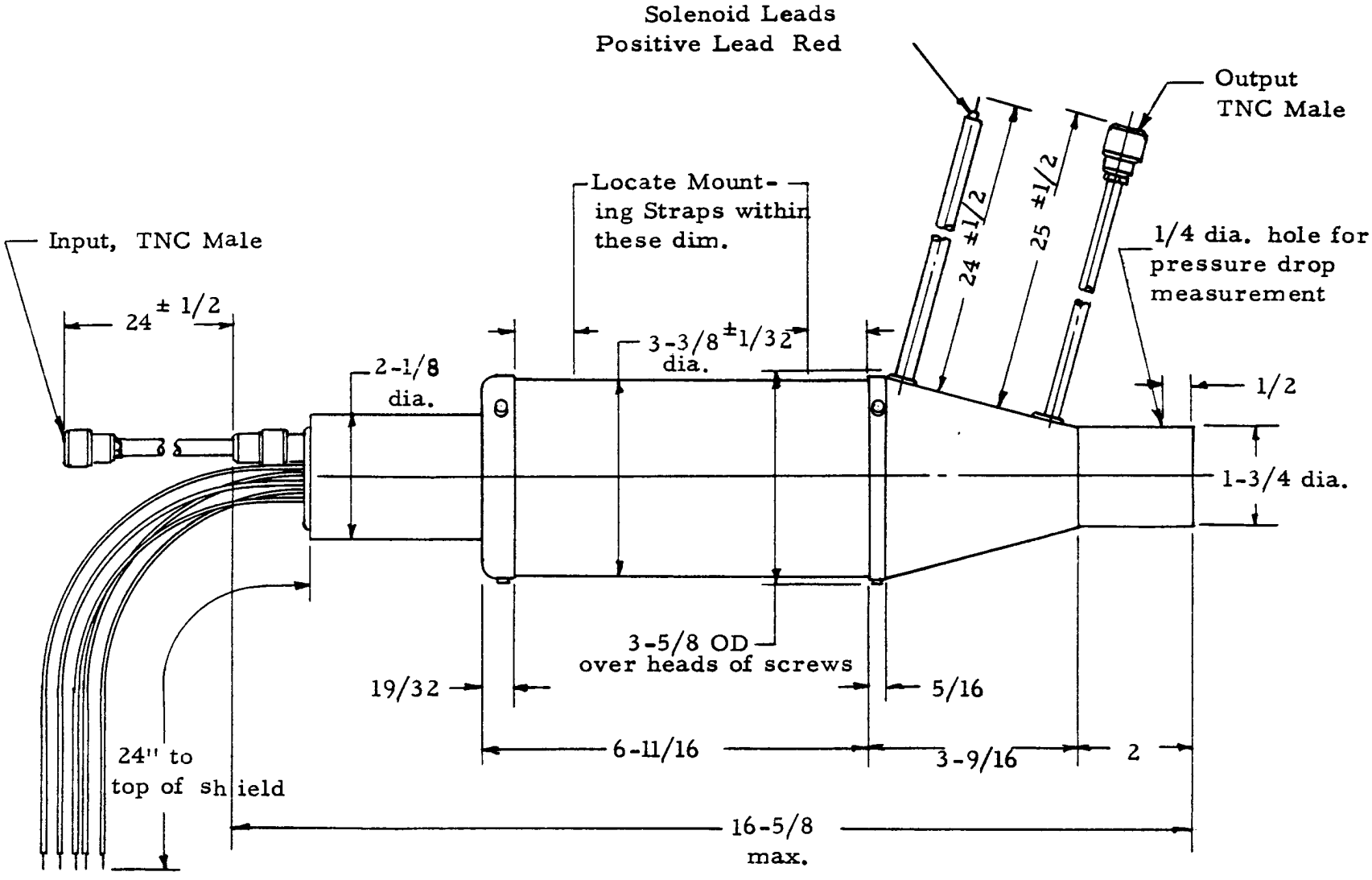

Color	Conn.
Green	Grid
	N. C.
Yellow	Cathode
Brown	Heater
Brown	Heater
Black	Anode, Capsule, Collector

Center conductor of r-f output cable is conn. to the helix

TRAVELING WAVE TUBE
TYPE D-2009

TENTATIVE

DESCRIPTION:

THE D-2013 IS A 5 WATT CW TRAVELING WAVE AMPLIFIER TUBE HAVING 33 DB GAIN AND 8000 TO 9600 MC FREQUENCY RANGE. IT IS CONSTRUCTED IN A RUGGED METAL ENVELOPE WITH A HELIX-TYPE SLOW WAVE STRUCTURE. THE INTEGRAL MATCHING CIRCUIT IS IN 50 OHM COAXIAL LINE AND IS PROVIDED WITH TYPE "N" CONNECTORS. THE TUBE IS SELF-ALIGNING IN THE EXTERNAL SOLENOID WHICH IS REQUIRED TO PROVIDE A UNIFORM MAGNETIC FIELD. A CONVERGENT BEAM GUN AND OXIDE IMPREGNATED CATHODE ARE USED. THE TUBE IS SUITABLE FOR EITHER CW OR PULSE SERVICE.

ELECTRICAL INFORMATION:

HEATER VOLTAGE	6.3 ($\pm$10%)	VOLTS
HEATER CURRENT	2.3	AMPERES
MAXIMUM FREQUENCY	9600	MC
MINIMUM FREQUENCY	8000	MC
MINIMUM COLD TRANSMISSION LOSS	50	DB
CAPACITANCE		
CONTROL ELECTRODE TO ALL OTHER ELEMENTS	10	UUFD
ALL GUN ELEMENTS TO SHELL	4.8	UUFD
SMALL SIGNAL VS GAIN CHARACTERISTIC (SEE CURVE, SHEET 4)		
POWER GAIN WITHIN 6 DB OF SMALL SIGNAL GAIN AT ANY FREQUENCY FROM 8.0 TO 9.6 KMC		
NOISE FIGURE	35	DB MAX.

ELECTRICAL RATINGS, ABSOLUTE VALUES:

MAXIMUM ANODE VOLTAGE (NOTE 1)	3400	VOLTS
MAXIMUM SHELL CURRENT (NOTE 2)	3	MA
MAXIMUM COLLECTOR VOLTAGE (NOTE 3)	3500	VOLTS
MAXIMUM COLLECTOR DISSIPATION (NOTE 4)	200	WATTS
MAXIMUM CONTROL ELECTRODE VOLTAGE (NOTE 5)	-250	VOLTS

MECHANICAL INFORMATION:

Type of Cathode	Oxide Impregnated Unipotential	
Base, Small Shell Duodecal, 5 Pin	JEDEC Designation B5-57	
Type of Envelope		Metal
Magnetic Field Strength (Nominal)	1300	Gauss
Length of Magnetic Field	6.75	Inches Uniform
Mounting Position		Any
Weight (not including solenoid)	1 pound	7 ounces
R-F Connections		50 ohm coax with type "N" Jack UG-23B/U
Type of Cooling		Forced Air
Glass Temperature	160°C	max.
Cooling Air Required (Note 4)	70	cfm

TYPICAL OPERATION AS POWER AMPLIFIER:

Anode Voltage	3200	Volts
Shell Current	1	ma
Collector Voltage	3300	Volts
Collector Current	50	ma
Control Electrode Voltage	-15	Volts
Power Output	5	Watts Minimum
Gain	33	db min.
Duty Cycle		
R-F	Variable to 1.0	
Beam	1.0	

Note 1: All voltages shown are with respect to cathode. Anode and helix are connected internally to the shell. The shell is normally operated at ground potnetial and the D-C connection is made to the shell of the solenoid.

Note 2: The shell current is the difference between the cathode current and collector current. This current should be minimized and must be less than the maximum rating. It is desirable to monitor the current from shell to ground during operation and it is recommended that overload protection be provided to remove high voltage if the shell current exceeds 3 ma.

Note 3: It is generally recommended that the collector be operated at 50 to 100 volts positive with respect to shell, and the potential difference between collector and shell be limited to 300 volts maximum.

Note 4: Forced air cooling of collector is required when average collector power is in excess of 10 watts. As the collector power is increased, the air flow required increases. At the maximum collector power of 200 watts, a minimum air flow of 70 cfm through the cooling fins is required.

NOTE 5: THE CONTROL ELECTRODE VOLTAGE IS ADJUSTED FOR MAXIMUM BEAM TRANSMISSION (COLLECTOR CURRENT/CATHODE CURRENT).

OPERATING PROCEDURE:

1. INSERT TUBE IN SOLENOID, SECURE IN PLACE WITH STOPS PROVIDED, MAKE CONNECTIONS.

2. TURN ON COOLING AIR, SOLENOID VOLTAGE (ADJUST TO APPROXIMATELY 1300 GAUSS), HEATER VOLTAGE, COLLECTOR VOLTAGE (IF USED), CONTROL ELECTRODE VOLTAGE (APPROXIMATELY -20 VOLTS).

3. RAISE HIGH VOLTAGE TO DESIRED VALUE, ADJUSTING SOLENOID VOLTAGE AND CONTROL ELECTRODE VOLTAGE FOR MAXIMUM COLLECTOR CURRENT, AND OBSERVING CARE NOT TO EXCEED 3 MA SHELL CURRENT. IT MAY BE NECESSARY TO ROTATE THE TUBE IN THE SOLENOID TO THE POINT GIVING BEST TRANSMISSION.

4. THE ABOVE PROCEDURE IS NOT REQUIRED AFTER INITIAL SET UP; HOWEVER, HEATER VOLTAGE SHOULD BE APPLIED ONE MINUTE BEFORE APPLYING HIGH VOLTAGE, AND PROPER MAGNETIC FIELD AND CONTROL ELECTRODE VOLTAGE MUST BE APPLIED BEFORE APPLYING HIGH VOLTAGE. OBSERVANCE OF THE 3 MA MAXIMUM LIMIT ON SHELL CURRENT IS ESSENTIAL TO PREVENT TUBE DAMAGE.

5. HEATER WARM UP OF 2 MINUTES BEFORE APPLYING HIGH VOLTAGE IS RECOMMENDED.

STANDARD SOLENOIDS TO OPERATE THIS TUBE ARE AVAILABLE, AND SOLENOIDS DESIGNED FOR PARTICULAR APPLICATIONS CAN BE SUPPLIED.

ADDITIONAL INFORMATION FOR SPECIFIC APPLICATIONS CAN BE OBTAINED FROM THE:

ELECTRON TUBE APPLICATIONS SECTION
ITT COMPONENTS DIVISION
POST OFFICE BOX 7065
ROANOKE, VIRGINIA

TYPICAL CHARACTERISTICS

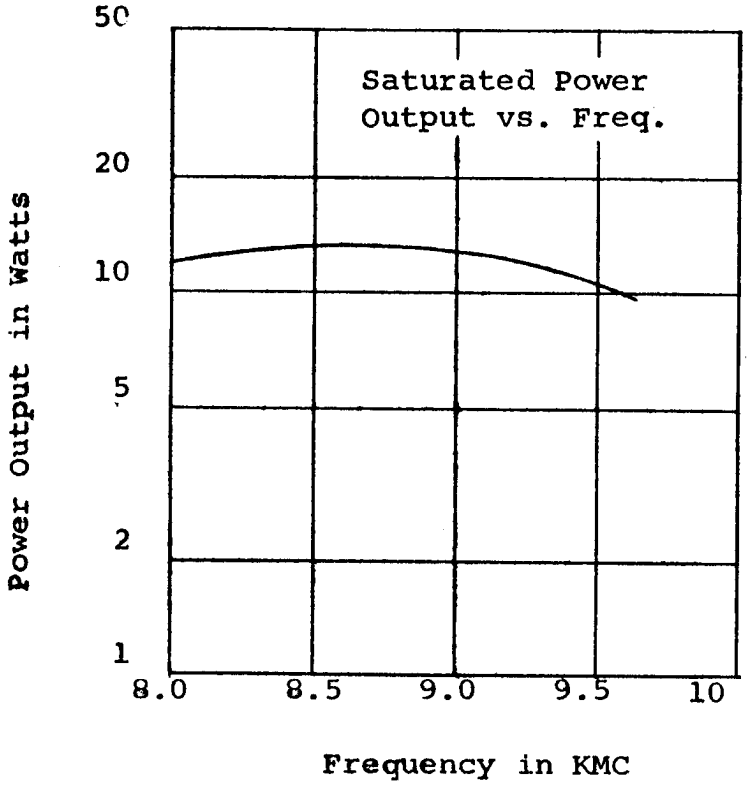

Magnetic field and control electrode voltage set for best transmission.

Voltage set at approximately 3200 volts.

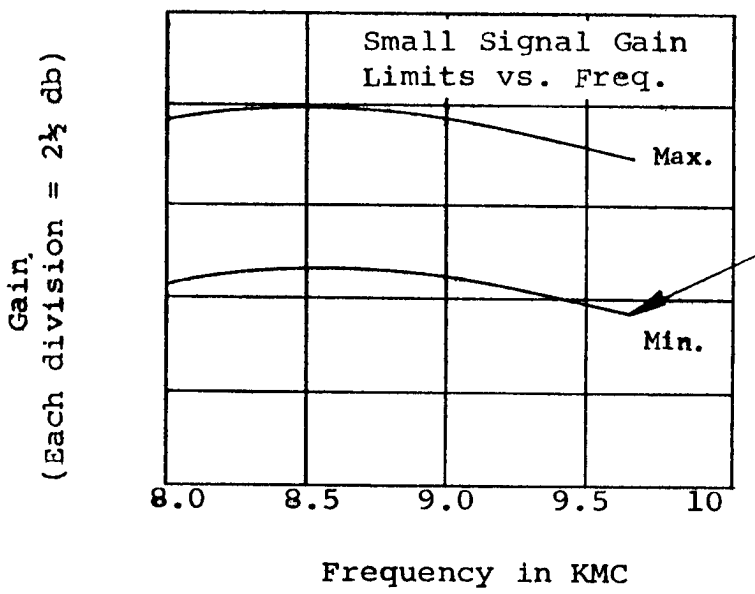

This point 9.6 KMC
33 db or greater.

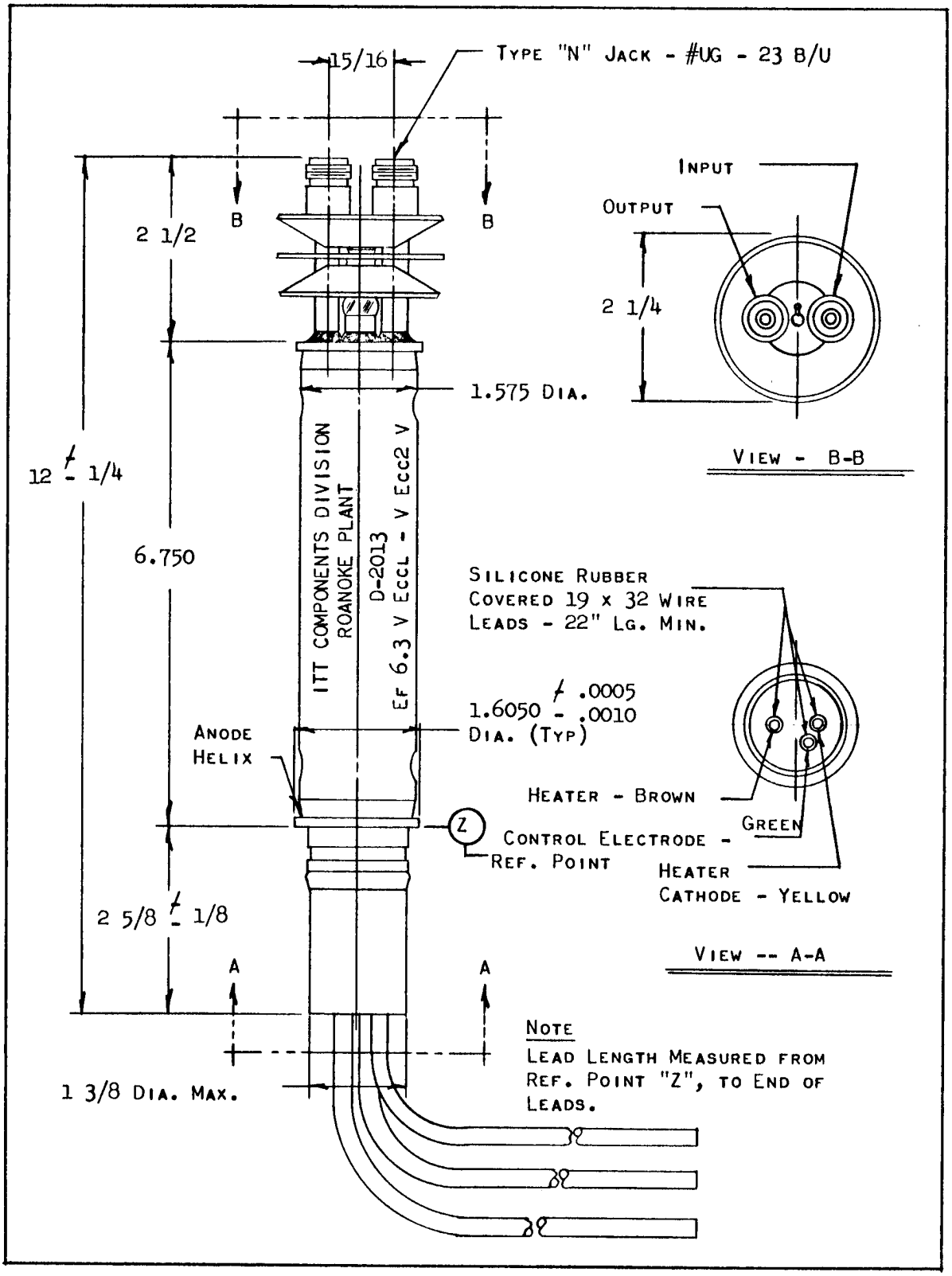

OUTLINE - D-2013

DESCRIPTION:

THE D-2014 IS A 1 KILOWATT PULSE TRAVELING WAVE AMPLIFIER TUBE HAVING 33 DB GAIN AND 8000 TO 9600 MC FREQUENCY RANGE. IT IS CONSTRUCTED IN A RUGGED METAL ENVELOPE WITH A HELIX TYPE SLOW WAVE STRUCTURE. THE INTEGRAL MATCHING CIRCUIT IS IN 50 OHM COAXIAL LINE AND IS PROVIDED WITH TYPE 'N' CONNECTORS. THE TUBE IS SELF-ALIGNING IN THE EXTERNAL SOLENOID WHICH IS REQUIRED TO PROVIDE A UNIFORM MAGNETIC FIELD. A CONVERGENT BEAM GUN AND OXIDE IMPREGNATED CATHODE ARE USED. DUTY CYCLES UP TO .005 AND PULSE LENGTHS UP TO 10 MICROSECONDS CAN BE USED. SMALL SIGNAL GAIN (/13 DBM INPUT) VARIATIONS WITHIN THE BAND DO NOT EXCEED ± 2 DB. POWER GAIN (1.0 KW OUTPUT) IS WITHIN 6 DB OF SMALL SIGNAL GAIN.

A CONTROL GRID SUITABLE FOR GRID PULSING IS PROVIDED.

ELECTRICAL INFORMATION:

HEATER VOLTAGE	6.3 (±5%)	VOLTS
HEATER CURRENT	5.2	AMPERES
MAXIMUM FREQUENCY (NOTE 1)	9600	MC
MINIMUM FREQUENCY (NOTE 1)	8000	MC
MINIMUM TRANSMISSION LOSS AT GRID BIAS = -200 VOLTS	60	DB
CAPACITANCE		
CONTROL GRID TO ALL OTHER ELEMENTS	13	UUFD

ELECTRICAL RATINGS, ABSOLUTE VALUES:

MAXIMUM ANODE VOLTAGE (NOTE 2)	12,000	VOLTS
MAXIMUM SHELL CURRENT	1.5	AMPERE PEAK
MAXIMUM COLLECTOR DISSIPATION (NOTE 3)	180	WATTS AVERAGE
MAXIMUM R-F INPUT POWER	10	WATTS AVERAGE
MAXIMUM R-F OUTPUT POWER	10	WATTS AVERAGE
MAXIMUM DUTY CYCLE	.005	
MAXIMUM PULSE WIDTH	10	U SECONDS
MAXIMUM CATHODE CURRENT	3.0	AMPERES PEAK
MAXIMUM GRID VOLTAGE		
NEGATIVE	-300	VOLTS
POSITIVE (NOTE 4)	/450	VOLTS
MAXIMUM GRID CURRENT	.27	AMPERES PEAK

MECHANICAL INFORMATION:

Type of Cathode	Oxide Impregnated Unipotential	
Base	Molded Silicone Rubber Base with Flying Leads	
Type of Nevelope		Metal
Magnetic Field Strength	2400	Gauss
Length of Magnetic Field	6.75	Inches uniform
Mounting Position		Any
Weight of Tube	1 lb.	7 oz.
R-F Connections	Type N Jack	UG-23 B/U
Type of Cooling		Forced Air
Air Flow on Collector Radiator (Note 3)	300	cfm
Maximum Glass Temperature	160	°C

TYPICAL OPERATION AS POWER AMPLIFIER:

Center Frequency	9000	mc
Anode Voltage (Note 2)	9600	volts
Cathode Current	1.8	amperes peak
Power Output (at center frequency)	1.8	kw peak
Bandwidth	8.0 to 9.6	kmc
Gain (Note 5)	33	db Min.
Duty	.001	
Pulse Width	2.0	u seconds
Grid Bias (for cut-off)	-100	volts
Grid Voltage during Pulse (Note 6)	+350	volts
Grid Current during Pulse	0.1	ampere peak

Note 1: Useful gain and power output exists below 8000 mc and above 9600 mc and can be utilized by adjusting anode voltage to optimize the frequency range desired. However, bandwidth cannot be extended both upward and downward simultaneously and maximum gain and power output outside the normal bandwidth will be lower than rated values.

Note 2: All voltages shown are with respect to cathode. Anode and helix are connected internally to the shell. The center conductor coax. terminals have an internal dc connection to shell. The shell is normally operated at ground potential and connection is made to the shell of the solenoid.

Note 3: Forced air cooling is required when average collector power is in excess of 10 watts. As the collector power is increased, the air flow required increases. At the maximum collector power of 150 watts, a minimum air flow of 30 cfm through the cooling fins is required.

NOTE 4: POSITIVE VOLTAGE MUST NOT BE APPLIED TO THE GRID IN THE ABSENCE OF ANODE VOLTAGE.

NOTE 5: THIS GAIN IS OBTAINED OVER THE 8.0 TO 9.6 KMC BANDWIDTH AT 1 KW POWER OUTPUT. SMALL SIGNAL GAIN IS WITHIN 6 DB OF THE POWER GAIN AT ANY PARTICULAR FREQUENCY.

NOTE 6: THE POSITIVE GRID VOLTAGE PULSE SHOULD BE THE MINIMUM CONSISTENT WITH NORMAL POWER OUTPUT.

SPECIAL NOTE:

MISMATCH UP TO AND INCLUDING A SHORT CIRCUIT IN INPUT OR OUTPUT LINES WILL NOT CAUSE OSCILLATION.

GENERAL OPERATING INSTRUCTIONS:

1. HEATER WARM UP OF 2 MINUTES BEFORE APPLYING HIGH VOLTAGE IS RECOMMENDED.
2. HIGH VOLTAGE MUST NOT BE APPLIED IN THE ABSENCE OF PROPER GRID BIAS AND MAGNETIC FIELD. POSITIVE GRID PULSE VOLTAGE MUST NOT BE APPLIED IN THE ABSENCE OF HIGH VOLTAGE.
3. INITIAL ADJUSTMENTS SHOULD BE DONE AT LOW DUTY CYCLE (LESS THAN .001) TO PREVENT TUBE DAMAGE DUE TO HIGH SHELL (INTERCEPTION) CURRENT.

ADDITIONAL INFORMATION FOR SPECIFIC APPLICATIONS CAN BE OBTAINED FROM THE:

ELECTRON TUBE APPLICATIONS SECTION
ITT COMPONENTS DIVISION
POST OFFICE BOX 7065
ROANOKE, VIRGINIA

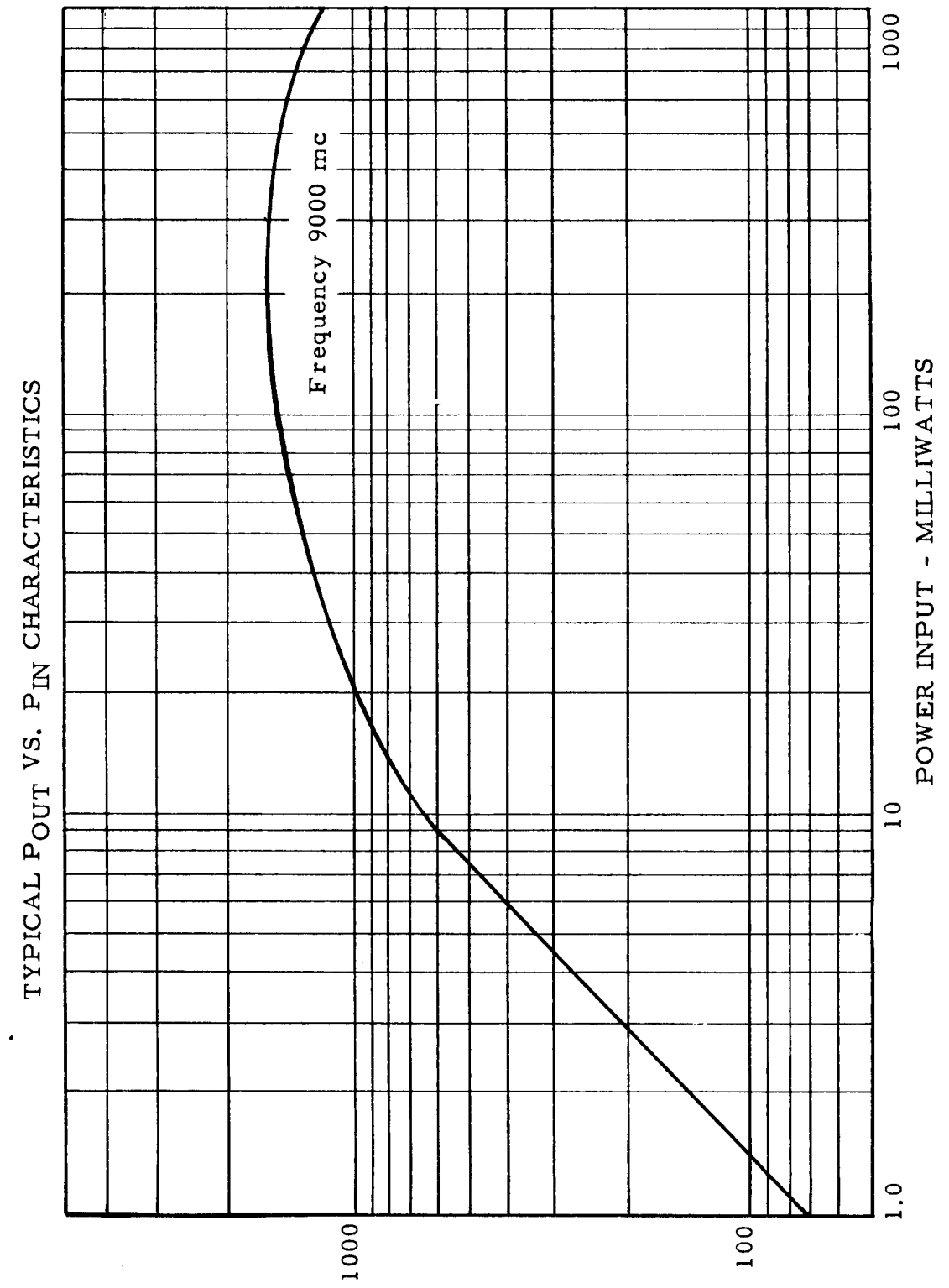
TYPICAL POUT VS. PIN CHARACTERISTICS
Frequency 9000 mc
1000
100
1.0
10
100
1000
POWER INPUT - MILLIWATTS

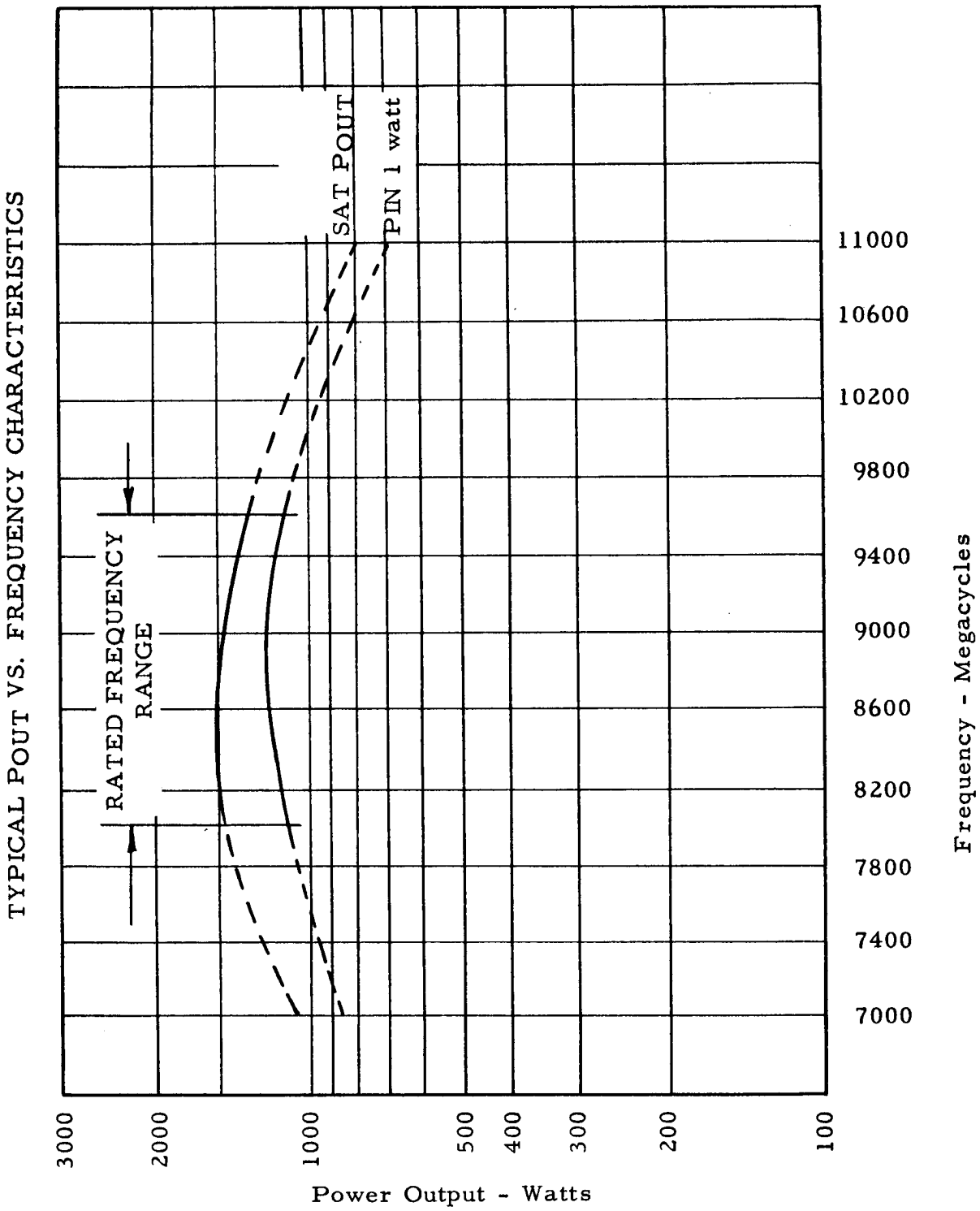
TYPICAL POUT VS. FREQUENCY CHARACTERISTICS
SAT POUT
PIN 1 watt
RATED FREQUENCY RANGE
11000
10600
10200
9800
9400
9000
8600
8200
7800
7400
7000
Frequency - Megacycles
3000
2000
1000
500
400
300
200
100
Power Output - Watts

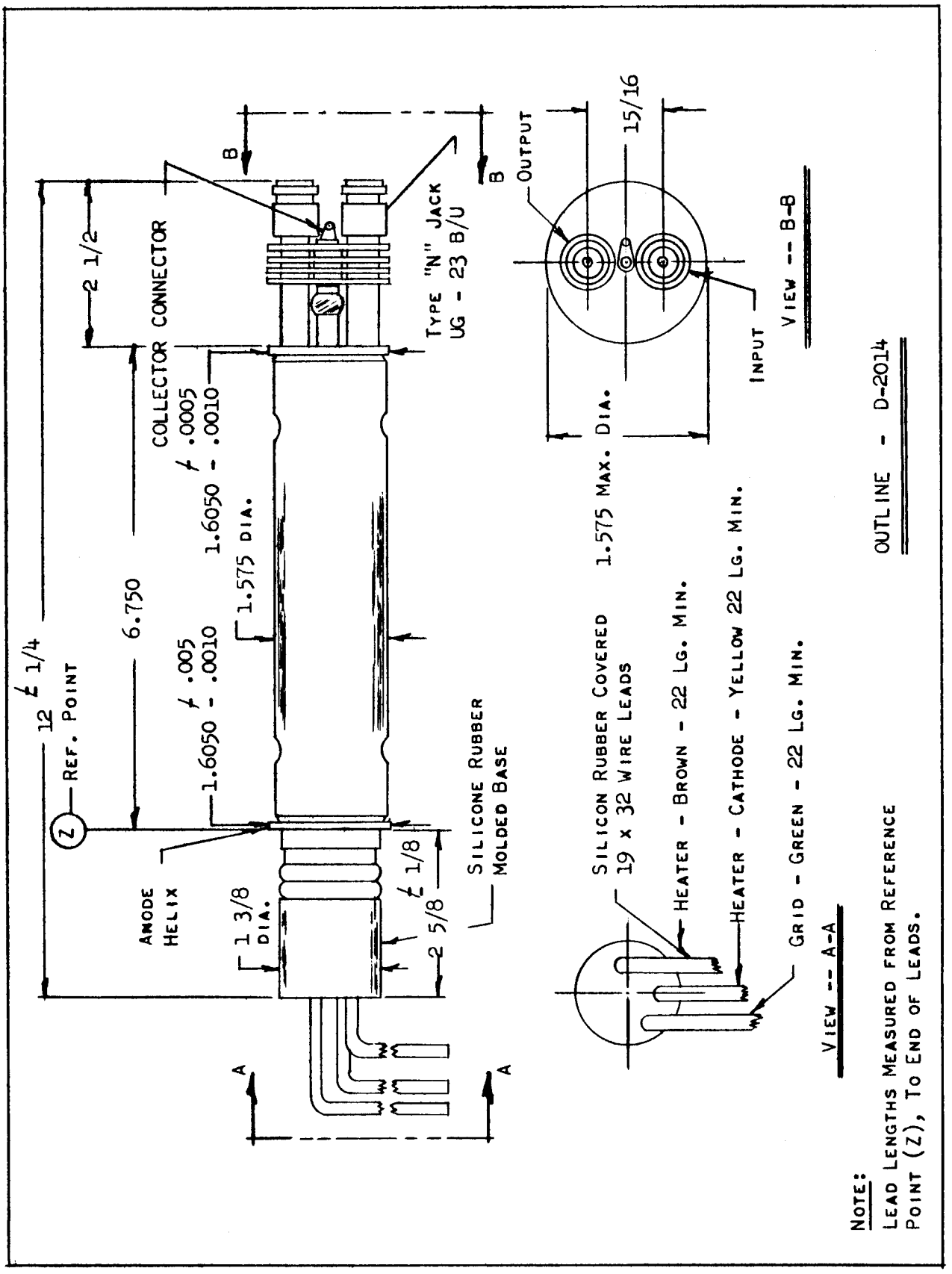
12 ℄ 1/4
REF. POINT
6.750
2 1/2
COLLECTOR CONNECTOR
℄ .0005
1.6050 - .0010
1.575 DIA.
℄ .005
1.6050 - .0010
TYPE "N" JACK
UG - 23 B/U
B
B
OUTPUT
15/16
INPUT
VIEW -- B-B
1.575 MAX. DIA.
ANODE
HELIX
1 3/8
DIA.
℄ 1/8
2 5/8
SILICONE RUBBER
MOLDED BASE
A
A
SILICON RUBBER COVERED
19 x 32 WIRE LEADS
HEATER - BROWN - 22 LG. MIN.
HEATER - CATHODE - YELLOW 22 LG. MIN.
GRID - GREEN - 22 LG. MIN.
VIEW -- A-A
OUTLINE - D-2014
NOTE:
LEAD LENGTHS MEASURED FROM REFERENCE
POINT (Z), TO END OF LEADS.

engineering TUBE DATA

D-2020
TRAVELING
WAVE TUBE

ITT Components Division

GENERAL DESCRIPTION:

Type D-2020 is a mechanically modified version of type F-6996. Silicone rubber insulated flying leads attached to the tube with Silastic insulation are provided for altitude operation, in place of the Small Shell Duodecal 5 pin base. A modified radiator, which though requiring the same air flow, can be cooled with lower velocity air, is provided.

Capacitance of the control electrode to all other elements is increased to 16 μμfd by the base and lead configuration.

All other characteristics are the same as type F-6996 and additional information can be obtained by referring to the F-6996 data sheet.

Additional information for specific applications can be obtained from the

Electron Tube Applications Section
ITT Components Division
P. O. Box 412
Clifton, New Jersey

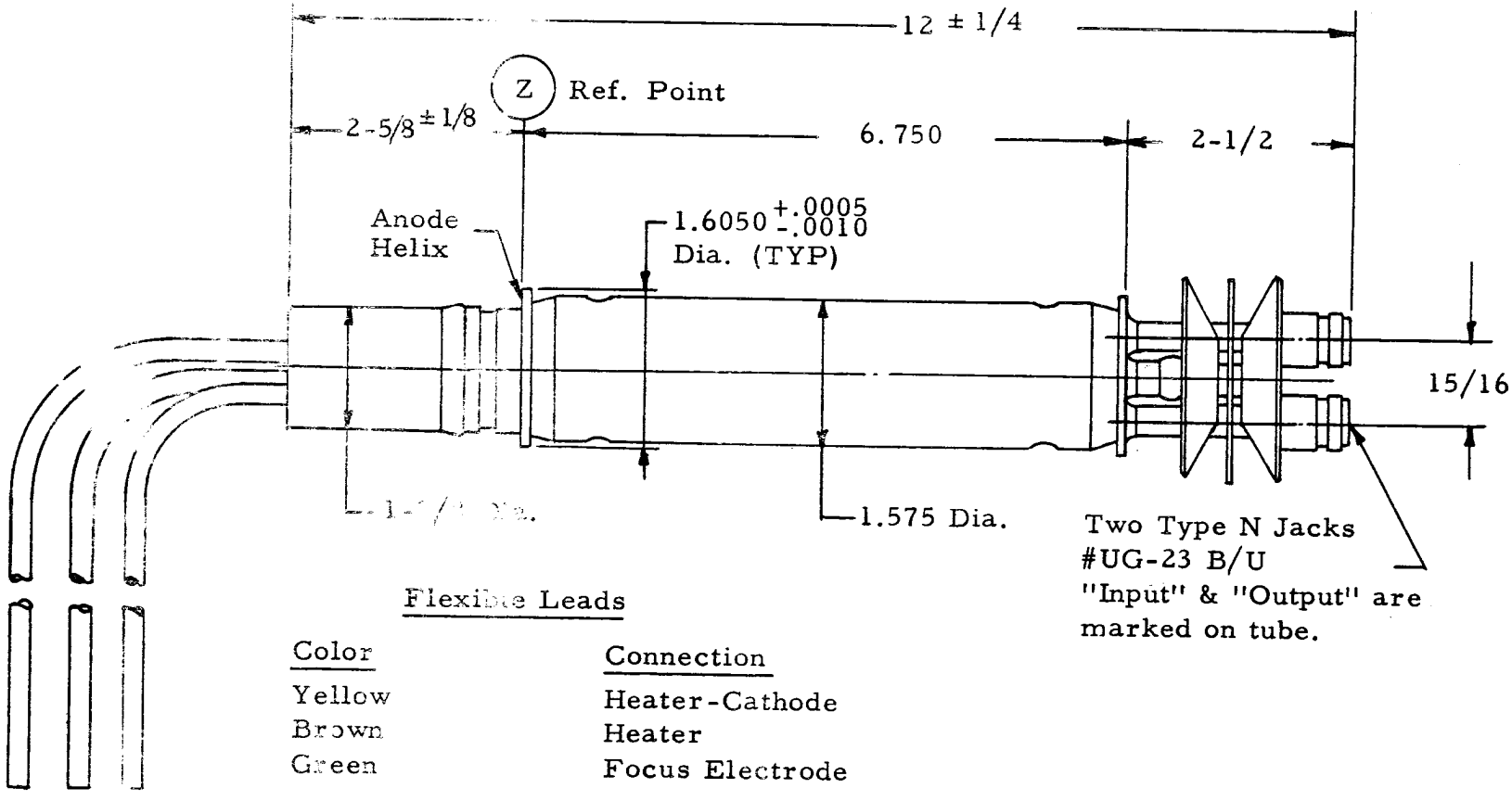

Flexible Leads

Color	Connection
Yellow	Heater-Cathode
Brown	Heater
Green	Focus Electrode

Lead Length = 18 inches, min. measured from Ref. Point Z to end of lead.

TRAVELING WAVE TUBE TYPE D-2020

ELECTRON TUBE DEPARTMENT ■ COMPONENTS DIVISION
INTERNATIONAL TELEPHONE AND TELEGRAPH CORPORATION, CLIFTON, NEW JERSEY

D-2023 TRAVELING WAVE TUBE

TENTATIVE

DESCRIPTION:

THE D-2023 IS A 1 KILOWATT PULSE TRAVELING WAVE TUBE HAVING 30 DB GAIN AND 4.0 TO 8.0 FREQUENCY RANGE. IT IS CONSTRUCTED IN A RUGGED METAL-CERAMIC ENVELOPE WITH A HELIX TYPE SLOW WAVE STRUCTURE. THE INTEGRAL MATCHING CIRCUIT IS IN 50 OHM COAXIAL LINE AND IS PROVIDED WITH FEMALE TYPE TNC CONNECTORS. THE TUBE IS SELF-ALIGNING IN AN EXTERNAL SOLENOID, WHICH IS REQUIRED TO PROVIDE A UNIFORM MAGNETIC FIELD. A CONVERGENT BEAM GUN AND OXIDE IMPREGNATED CATHODE ARE USED. DUTY CYCLES UP TO .01 CAN BE USED.

A CONTROL GRID FOR GRID PULSING IS PROVIDED.

ELECTRICAL INFORMATION:

HEATER VOLTAGE	6.3 (±5%)	VOLTS
HEATER CURRENT	5.0	AMPS
MAXIMUM FREQUENCY	8.0	
MINIMUM FREQUENCY	4.0	
MINIMUM TRANSMISSION LOSS AT GRID BIAS = .60 VOLTS	40	DB
CAPACITANCE		
CONTROL GRID TO ALL OTHER ELEMENTS	22	UUFD

ELECTRICAL RATINGS, ABSOLUTE VALUES:

MAXIMUM ANODE VOLTAGE (NOTE 1)	10,000	VOLTS
MAXIMUM HELIX CURRENT	0.35	AMPS
MAXIMUM COLLECTOR DISSIPATION	240	WATTS
MAXIMUM R.F. INPUT POWER	5	WATTS
MAXIMUM DUTY CYCLE	.01	
MAXIMUM GRID VOLTAGE		
NEGATIVE	-200	VOLTS
POSITIVE	±400	VOLTS PEAK
MAXIMUM GRID CURRENT	0.3	AMPS PEAK

MECHANICAL INFORMATION:

Type of Cathode		Oxide Impregnated
Gun Connections		Flying Leads
R-F Connections		Female TNC
Magnetic Field Strength	2000	Gauss
Mounting Position		Any
Type of Cooling (Note 2)		

TYPICAL OPERATION: (Note 3)

Center Frequency	5.5	KMC
Anode Voltage	8800	Volts
Cathode Current	2.5	Amps peak
Power Output (at center frequency) (Note 4)	1.5	KW peak
Band Width (Note 4)	4 to 8	KMC
Gain (Note 4)	30	DB
Duty	Variable to 0.01	max.
Pulse Width	2	usec.
Grid Bias (for cutoff)	-60	Volts
Grid Voltage during Pulse	200	Volts peak
Grid Current during Pulse	0.2	Amps peak

Note 1: All voltages shown are with respect to cathode. Anode, collector and outer coax conductor of the R-F terminals are connected internally to the shell. The helix is connected to the center conductor of the coax line and a DC connection from the helix to the shell must be provided externally in the R-F circuitry.

Note 2: A maximum of 240 watts is dissipated at the collector. A suitable heat sink must be provided to conduct heat from the collector and maintain its surface temperature below 180°C maximum. Cooling of the external solenoid must be provided such that the tube which is inserted into it will not exceed 180°C.

Note 3: The values of voltages to be used are provided in test data supplied with each tube. High voltage must not be applied in the absence of proper grid bias voltage. Positive grid pulse voltage must not be supplied in the absence of high voltage. Grid pulse voltage in excess of that indicated for each tube should not be used since beam defocussing will occur. Provisions must be made not to exceed maximum ratings, especially helix current and duty cycle. Initial adjustments are conveniently done at low duty cycle (less than .001) where misadjustment of parameters is much less likely to cause tube damage.

NOTE 4: POWER OUTPUT OF 1 KW PEAK OR MORE IS OBTAINED OVER THE FREQUENCY RANGE 4.0 TO 7.5 KMC, AND 800 WATTS OR MORE OVER THE FREQUENCY RANGE 7.5 TO 8.0 KMC. POWER INPUT REQUIRED TO OBTAIN THIS POWER OUTPUT DOES NOT EXCEED 1 WATT.

ADDITIONAL INFORMATION FOR SPECIFIC APPLICATIONS CAN BE OBTAINED FROM THE:

ELECTRON TUBE APPLICATIONS SECTION
ITT COMPONENTS DIVISION
POST OFFICE BOX 7065
ROANOKE, VIRGINIA

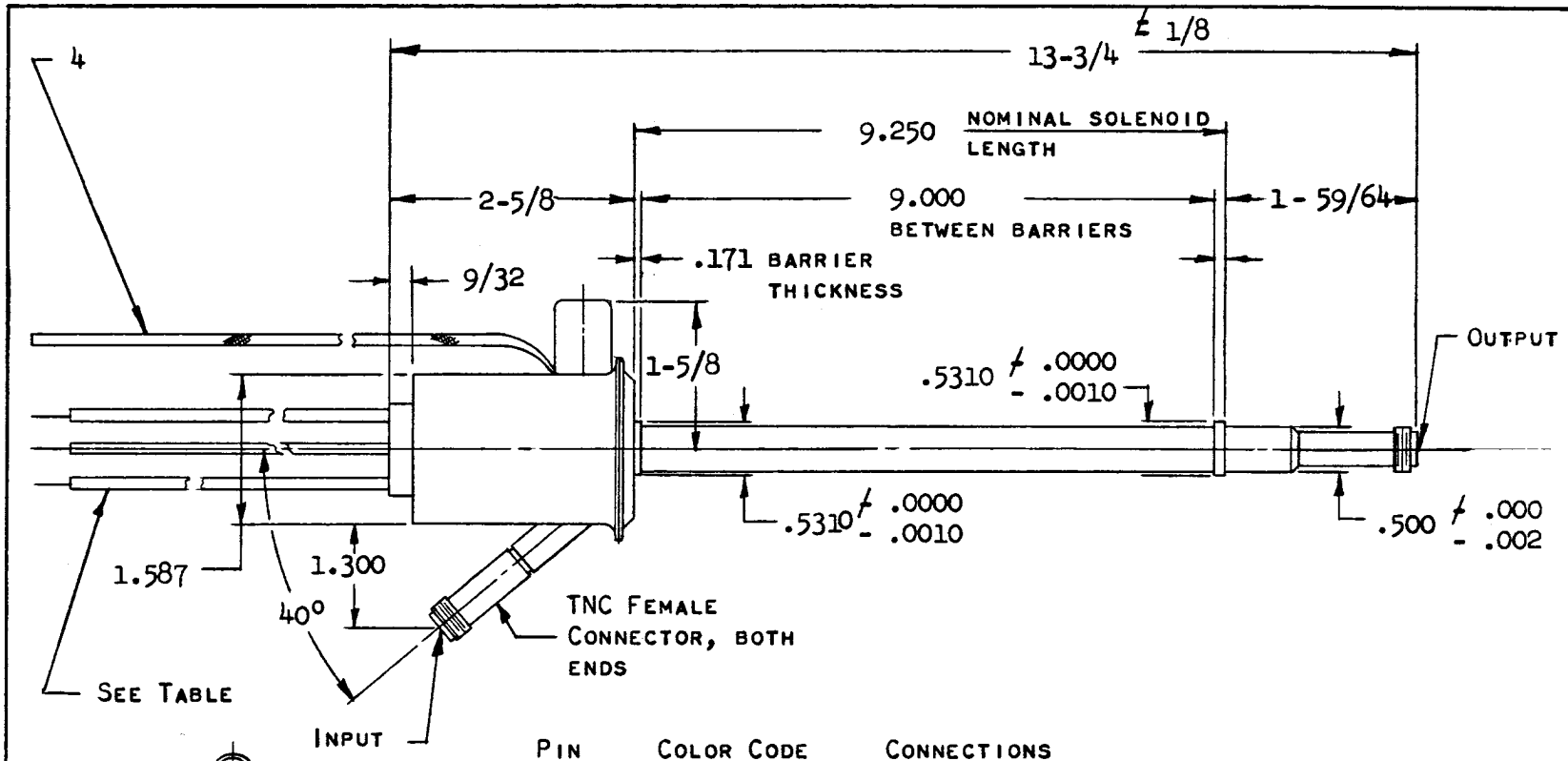

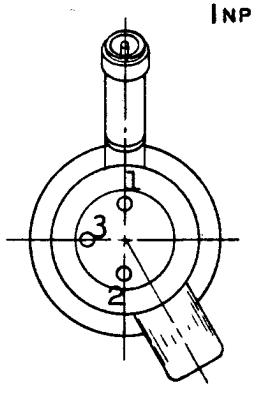

PIN	COLOR CODE	CONNECTIONS
1	BROWN	HEATER
2	YELLOW	HEATER CATHODE
3	GREEN	GRID
4	BRAID	ANODE, COLLECTOR & CAPSULE

FLEXIBLE LEADS 24" MIN. LENGTH

NOTE: INPUT CONNECTOR ROTATED FOR CLARITY

OUTLINE - D-2023 TRAVELING WAVE TUBE

engineering TUBE DATA

ITT Components Division

D-2024
TRAVELING
WAVE TUBE

FORMERLY F-6996-A

GENERAL DESCRIPTION:

TYPE D-2024 IS A MECHANICALLY MODIFIED VERSION OF TYPE F-6996. AN INTEGRAL MATCHING CIRCUIT IS PROVIDED AND THE RF TERMINALS CONSIST OF UG-40-AU CHOKE FLANGE WAVE GUIDE CONNECTORS.

ALL OTHER CHARACTERISTICS ARE THE SAME AS TYPE F-6996 AND ADDITIONAL INFORMATION CAN BE OBTAINED BY REFERRING TO THE F-6996 DATA SHEET.

THE OUTLINE OF THE D-2024 IS ATTACHED.

ITT ELECTRON TUBE DEPARTMENT
COMPONENTS DIVISION
INTERNATIONAL TELEPHONE AND TELEGRAPH CORPORATION
P. O. BOX 412, CLIFTON, NEW JERSEY

10-60

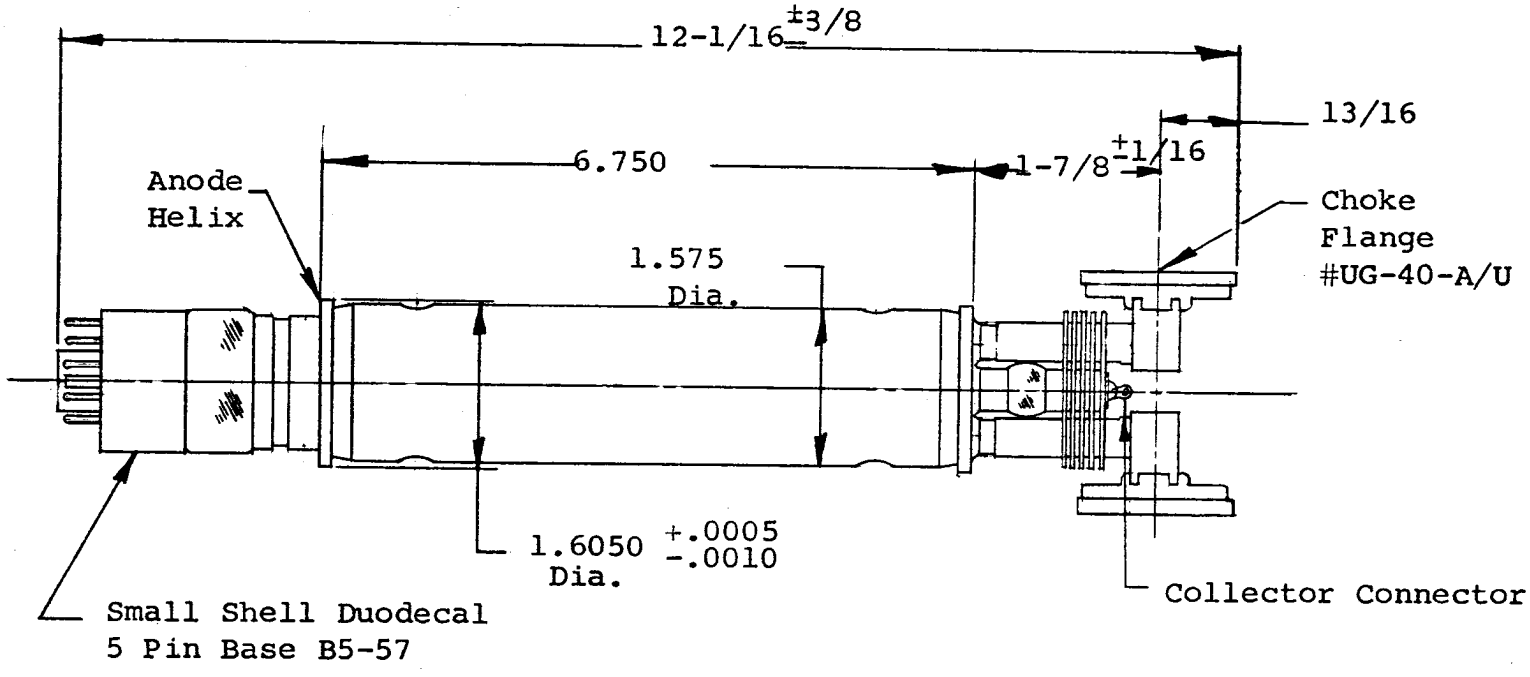

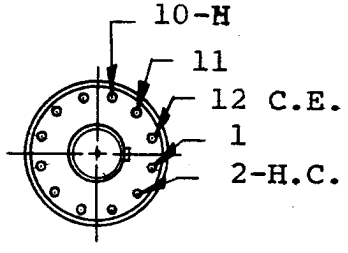

BASING

PIN	CONNECTION
1	No Conn.
2	Heater-Cathode
10	Heater
11	No Conn.
12	Control Electrode

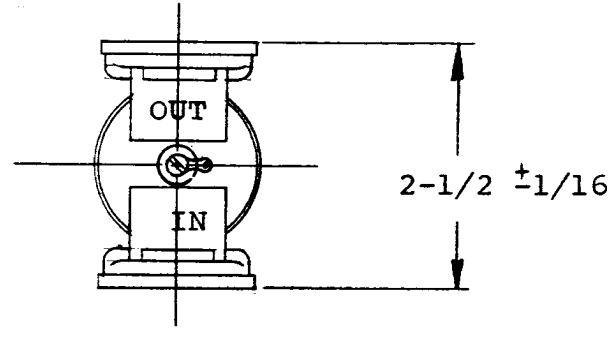

TRAVELING WAVE TUBE TYPE D-2024

ELECTRON TUBE DEPARTMENT ■ COMPONENTS DIVISION
INTERNATIONAL TELEPHONE AND TELEGRAPH CORPORATION, CLIFTON, NEW JERSEY

TENTATIVE

DESCRIPTION:

THE D-3001 IS A 5 INCH IATRON (DIRECT VIEW STORAGE CATHODE-RAY TUBE) THAT PRODUCES A BRIGHT VISUAL DISPLAY OF ELECTRICALLY STORED INFORMATION. IT IS ELECTROSTATICALLY FOCUSED AND DEFLECTED. THE TUBE DISPLAYS BRIGHT IMAGES THAT CAN BE VIEWED IN DIRECT DAYLIGHT, AND THE TUBE FEATURES THE ABILITY TO WRITE, STORE AND ERASE SIGNAL INFORMATION AT THE WILL OF THE OPERATOR. GRAY SHADES ARE PRODUCED IN ACCORDANCE WITH THE AMPLITUDE VARIATIONS OF THE INPUT SIGNAL. THE TUBE HAS TWO ELECTRON GUNS, A WRITING GUN WHICH WRITES THE INPUT SIGNAL ON AN INSULATOR STORAGE SCREEN, AND A FLOOD GUN WHICH ILLUMINATES THE PHOSPHOR IN ACCORDANCE WITH THE STORED SIGNAL.

GENERAL:

DIMENSIONS	SEE OUTLINE ATTACHED
NOMINAL TUBE DIAMETER	5 INCHES
MINIMUM USEFUL DISPLAY DIAMETER	4 INCHES
PHOSPHOR	P-20 ALUMINIZED
OPERATING POSITION	ANY
WEIGHT (APPROXIMATE)	2 LB. 8 OZ.
CATHODE PRE-HEATING TIME	30 SECONDS
FOCUS METHOD	ELECTROSTATIC
DEFLECTION METHOD	ELECTROSTATIC

MAXIMUM RATINGS:

	FLOOD SECTION
VIEWING SCREEN	∱10 KV
BACKING ELECTRODE	∱25 V
COLLECTOR	∱250 V
ANODE #4	∱150 V
ANODE #3	∱150 V
ANODE #2	∱150 V
ANODE #1	∱80 V
HEATER-CATHODE VOLTAGE	∱125 V

* TRADEMARK OF INTERNATIONAL TELEPHONE AND TELEGRAPH CORPORATION

WRITE SECTION

WRITE CATHODE	-1000 V	
GRID #1	NEGATIVE VOLTAGE	RESPECT WRITE CATHODE 150 V
	POSITIVE VOLTAGE	RESPECT WRITE CATHODE 0 V
GRID #2	±150 V	
GRID #3	±500 V	RESPECT WRITE CATHODE
HEATER-CATHODE VOLTAGE	±125 V	
GRID #2 TO ANY DEFLECTING ELECTRODE	±500 V	

TYPICAL OPERATING VALUES:

FLOOD SECTION

VIEWING SCREEN	±8.5 KV DC	1.0 MA (MAX.)	
BACKING ELECTRODE	±10 VDC		
COLLECTOR	±180 VDC	2.0 MA (MAX.)	
ANODE #4	±90 VDC	1.5 MA (MAX.)	
ANODE #3	±20 VDC	1.5 MA (MAX.)	
ANODE #2	±30 VDC	1.8 MA (MAX.)	
ANODE #1	±60 VDC	5.0 MA (MAX.)	
FLOOD CATHODE	0 VDC	10.0 MA (MAX.)	
HEATER	6.3 V AC OR DC	1.4 A	

WRITE SECTION

WRITE CATHODE	-750 VDC	3.0 MA (MAX.)	
GRID #1 CUTOFF (NOTE 1)	-60 VDC	RESPECT WRITE CATHODE	
GRID #2	0 VDC		
GRID #3	±165 VDC	RESPECT WRITE CATHODE	
HEATER	6.3 V	AC OR DC .6 A	
MEAN DEFLECTION PLATE VOLTAGE	0 V		

RANGE OF TYPICAL OPERATING ADJUSTMENTS:

ANODE #2	25 TO 35	VDC	ADJUST FOR BEST COLLIMATION
ANODE #3	15 TO 30	VDC	ADJUST FOR BEST COLLIMATION
GRID #1 CUTOFF (NOTE 1)	-60 TO -120	VDC	
GRID #3 FOCUS	±105 TO 210	VDC	ADJUST FOR BEST FOCUS
ERASE PULSES	0 TO 10	VOLT AMPLITUDE, 1 USECOND WIDE, 100-5000 PRF - ADJUST FOR DESIRED VIEWING TIME.	

* TRADEMARK OF ITT

TYPICAL PERFORMANCE:

RESOLUTION (NOTE 2)		
50% OF FULL BRIGHTNESS	60	LINES/INCH
BRIGHTNESS	2,000	FT. LAMBERTS
WRITING SPEED		
20 VOLT DRIVE TO 50% BRIGHTNESS	20,000	INCHES/SECOND
40 VOLT DRIVE TO 50% BRIGHTNESS	40,000	INCHES/SECOND
ERASE TIME (NOTE 3)	12	MILLISECONDS
VIEWING TIME (NOTE 4)	20	SECONDS
STORAGE TIME (NOTE 5)	20	SECONDS
DEFLECTION FACTOR		
D1-D2	40 TO 49	VOLTS/INCH
D3-D4	38 TO 47	VOLTS/INCH
HALF-TONE STEPS	4	(MINIMUM)

ENVIRONMENTAL DATA:

AMBIENT TEMPERATURE RANGE		
OPERATING	-55° TO +71°	C
NON-OPERATING	-65° TO +100°	C
ALTITUDE	70,000	FEET
VIBRATION (CONTINUOUS)	3G, 5 CPS TO 500	CPS
SHOCK (3 AXES)		
OPERATING	15G FOR 40	MS, 18 IMPACTS
OPERATING	25G FOR 5	MS, 6000 IMPACTS
NON-OPERATING (CRASH SAFETY)	30G FOR 11	MS, 2 IMPACTS

NOTES:

1. VISUAL CUTOFF OF THE STORED, FOCUSED, UNDEFLECTED SPOT.

2. RESOLUTION IS MEASURED BY THE SHRINKING RASTER METHOD AT THE CENTER OF THE TUBE.

3. ERASE TIME IS THE SHORTEST TIME IN WHICH A SIGNAL CAN BE REMOVED FROM THE TUBE AFTER BEING STORED AT FULL BRIGHTNESS.

4. VIEWING TIME IS THE MINIMUM TIME THAT A SIGNAL STORED AT FULL BRIGHTNESS ANYWHERE IN THE DISPLAY AREAS CAN BE VIEWED WITH ERASE PULSES CONTINUOUSLY APPLIED TO COUNTERACT ION WRITING.

* TRADEMARK OF ITT

5. STORAGE TIME IS THE TIME REQUIRED FOR THE BRIGHTNESS TO INCREASE FROM CUTOFF TO 50 PER CENT OF FULL VALUE IN THE ABSENCE OF ERASE PULSES.

SPECIAL PRECAUTIONS:

OBSERVE MAXIMUM RATINGS TO AVOID POSSIBLE DAMAGE TO THE TUBES. IN PARTICULAR THE VIEWING SCREEN VOLTAGE SHOULD BE LIMITED SO AS TO NEVER EXCEED 10 KV. THE FULL VOLTAGE SHOULD NOT BE APPLIED TO THE VIEWING SCREEN INSTANTANEOUSLY. AN ORDINARY RC FILTER AT THE OUTPUT OF THE POWER SUPPLY WILL PROVIDE ADEQUATE ASSURANCE THAT THE VOLTAGE BUILD UP WILL NOT BE TOO ABRUPT. THE MINIMUM RESISTANCE OF THE HIGH VOLTAGE CIRCUIT SHOULD BE 1 MEG OHM.

REPEATED BOMBARDMENT WITH A HIGH CURRENT FOCUSED WRITING BEAM ON A SMALL AREA OF THE STORAGE SURFACE CAN BURN A DARK IMAGE INTO THE DISPLAY AREA, WHICH MAY REMAIN FOR SEVERAL HOURS OR EVEN PERMANENTLY. THEREFORE, DEFLECTION VOLTAGES SHOULD BE APPLIED BEFORE OPERATING THE WRITING BEAM.

ADDITIONAL INFORMATION FOR SPECIFIC APPLICATIONS CAN BE OBTAINED FROM THE

ELECTRON TUBE APPLICATIONS SECTION
ITT COMPONENTS DIVISION
POST OFFICE BOX 412
CLIFTON, NEW JERSEY

* TRADEMARK OF THE INTERNATIONAL TELEPHONE & TELEGRAPH CORPORATION

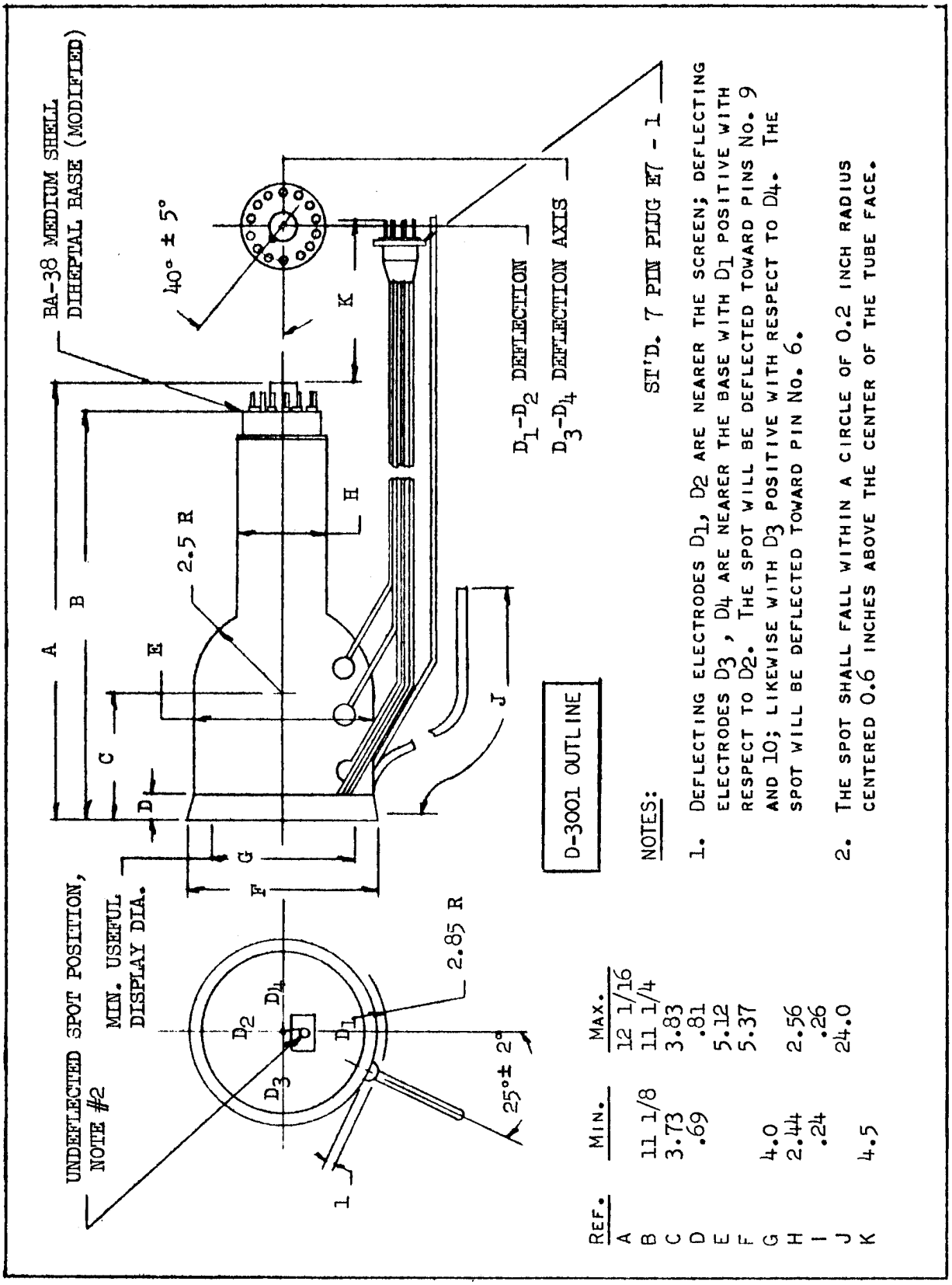

D-3001 OUTLINE

REF.	MIN.	MAX.
A		12 1/16
B	11 1/8	11 1/4
C	3.73	3.83
D	.69	.81
E		5.12
F		5.37
G	4.0	
H	2.44	2.56
I	.24	.26
J		24.0
K	4.5	

NOTES:

1. DEFLECTING ELECTRODES D_1, D_2 ARE NEARER THE SCREEN; DEFLECTING ELECTRODES D_3 , D_4 ARE NEARER THE BASE WITH D_1 POSITIVE WITH RESPECT TO D_2. THE SPOT WILL BE DEFLECTED TOWARD PINS No. 9 AND 10; LIKEWISE WITH D_3 POSITIVE WITH RESPECT TO D_4. THE SPOT WILL BE DEFLECTED TOWARD PIN No. 6.
2. THE SPOT SHALL FALL WITHIN A CIRCLE OF 0.2 INCH RADIUS CENTERED 0.6 INCHES ABOVE THE CENTER OF THE TUBE FACE.

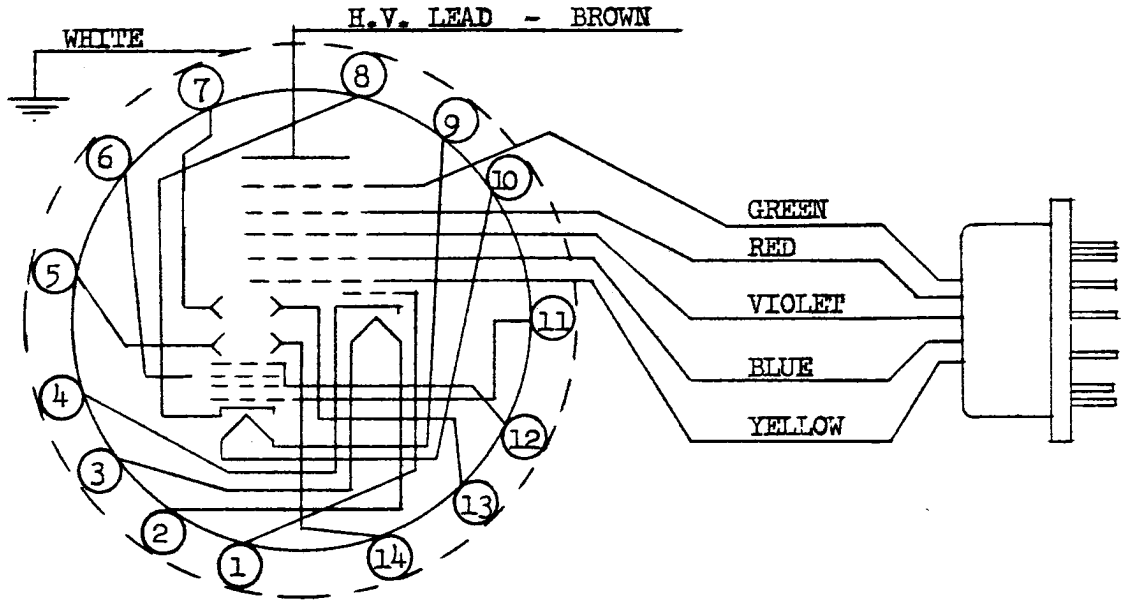

14 PIN BASE

1	ANODE #1
2	FLOOD HEATER
3	FLOOD HEATER
4	FLOOD CATHODE
5	D-3
6	GRID #3 (FOCUS)
7	D-1
8	WRITE CATHODE
9	WRITE HEATER
10	WRITE HEATER
11	GRID #1
12	GRID #2
13	D-2
14	D-4

FLYING LEADS

WHITE SMALL DIAMETER ELECTROSTATIC SHIELD
BROWN LARGE DIAMETER VIEWING SCREEN

D-3001

E7-1 PIN CONNECTIONS

1	BACKING ELECTRODE
2	N/C
3	ANODE #2
4	ANODE #3
5	ANODE #4
6	N/C
7	COLLECTOR

TENTATIVE

APPLICATION:

THE DARK TRACE TUBE IS A CATHODE-RAY TUBE THAT RETAINS AN IMAGE FOR AN EXTENDED PERIOD OF TIME. IMAGE TIME IS ADJUSTABLE BETWEEN A FEW SECONDS AND SEVERAL HOURS.

THE IMAGE APPEARS DARK ON A LIGHT BACKGROUND AND CAN BE VIEWED IN NORMAL LIGHT. THE TUBE CAN BE USED WHEREVER UNIQUE OR SLOWLY DEVELOPING PHENOMENA WITH SPEEDS TO ABOUT 300 M/SEC (975 FT/SEC) ARE TO BE RECORDED, FOR EXAMPLE IN SWITCHING OR METERING, WHICH USED TO REQUIRE A LOOP OSCILLOGRAPH, OR IT CAN BE USED AS A STORAGE DEVICE IN RECORDING EQUIPMENT. OTHER EXAMPLES OF APPLICATION ARE IMAGE TRANSMISSION SYSTEMS WITH SLOW IMAGE SEQUENCE, MEANS FOR DIRECT TRANSMISSION OF DRAWINGS, AND RADAR DISPLAY UNITS. SINCE THE IMAGE CAN BE VIEWED UNDER NORMAL LIGHTING CONDITIONS, THAT IS, WITH THE EYE ADAPTED TO BRIGHT LIGHT, IT FINDS MANY APPLICATIONS IN THE LABORATORY AND INDUSTRY.

THE IMAGE CAN BE ERASED AT ANY TIME WITHIN ABOUT 10 SECONDS BY APPLYING A QUENCHING VOLTAGE.

DESIGN:

THE GLASS ENVELOPE HAS A RECTANGULAR IMAGE SCREEN MEASURING 4 X 5-1/4 INCHES. THE SCREEN DIAGONAL IS 6-3/4 INCHES, AND THE EFFECTIVE SCREEN AREA IS 3-1/8 X 4-7/8 INCHES.

THE TUBE'S BEAM SYSTEM IS FOCUSSED ELECTROSTATICALLY. DEFLECTION IS ACCOMPLISHED MAGNETICALLY AND THE DEFLECTION ANGLE IS 70°. A THIN MICA SHEET IS ARRANGED IMMEDIATELY BEHIND THE FRONT PANE AS AN IMAGE SCREEN. ON THE SIDE OF THE SHEET FACING THE CATHODE, A POTASSIUM CHLORIDE LAYER HAS BEEN DEPOSITED BY VAPORIZATION. WHEN THE CATHODE RAY STRIKES AN AREA, IT CHANGES THE GRID STRUCTURE OF THE CRYSTALS AND THIS LEADS TO A PURPLISH COLORING.

ON THE SIDE OF THE MICA SHEET FACING THE VIEWER, THERE IS A TRANSPARENT SEMICONDUCTIVE LAYER CONNECTED TO TWO TERMINALS THAT PASS THROUGH THE ENVELOPE. WHEN A QUENCHING VOLTAGE IS APPLIED, THE IMAGE IS QUENCHED BY JOULEAN HEAT. AT THE SAME TIME, THE PLATE VOLTAGE IS APPLIED OVER ONE OF THE TERMINALS.

THE FRONT PANE OF THE TUBE IS MADE OF FLAT GLASS, SO THAT ANY IMAGE CAN BE ACCURATELY TRACED ON TRANSPARENT PAPER APPLIED TO THE GLASS.

THE TUBE'S OPERATING CONDITIONS HAVE BEEN SO CHOSEN THAT THE REQUIRED VOLTAGES CAN BE PRODUCED WITH STANDARD TELEVISION COMPONENTS. SINCE WITH THE PHENOMENA TO BE REPRESENTED IT IS IN MANY CASES NOT POSSIBLE TO USE THE DEFLECTION FREQUENCIES COMMONLY USED IN THE TELEVISION INDUSTRY, SPECIAL CIRCUIT ARRANGEMENTS HAVE BEEN WORKED OUT FOR THE AS 17-21 TUBE THAT ALLOWS USING MASS-PRODUCED TELEVISION PARTS TO PRODUCE THE OPERATING VOLTAGES AND PROPER DEFLECTION.

TECHNICAL CHARACTERISTICS:

BEAM SYSTEM	TETRODE WITH UNIT LENS
ENVELOPE	ALL-GLASS DESIGN
BASE	TWELVE-SIDED (DUODEKAL) WITH 7 PRONGS
FOCUSSING	ELECTROSTATIC
DEFLECTION	MAGNETIC
DEFLECTION ANGLE	70° DIAGONAL
FRONT AREA	FLAT CLEAR GLASS
SCREEN	DARK TRACE SCREEN
IMAGE TIME	EXTREMELY LONG, UP TO SEVERAL HOURS
SCREEN AREA	3-1/8 X 4-7/8 INCHES
OVERALL LENGTH, INCLUDING BASE	APPROX. 10-1/2 INCHES
WEIGHT	APPROX. 1-1/2 POUNDS
WRITING RATE	12,000 INCHES PER SECOND

HEATING VALUES FOR PARALLEL OR SERIES SUPPLY

FILAMENT VOLTAGE	V_H 6.3 V
FILAMENT	I_H 0.3 A
OXIDE CATHODE	INDIRECTLY HEATED

RATINGS:

PLATE VOLTAGE	7 - 14	KV
SCREEN GRID VOLTAGE	300	VOLTS, APPROX.
CONTROL GRID VOLTAGE (PEAK)	2	VOLTS
FOCUSSING VOLTAGE	0 - 400	VOLTS
BIASING POTENTIAL	-40 - -86	VOLTS
QUENCHING POWER	10 - 15	WATTS
RESISTANCE OF QUENCHING LAYER	80 - 120	OHMS
MAXIMUM CATHODE CURRENT	0.5	MILLIAMPERE
NEGATIVE GRID BIAS	0 - 150	VOLTS
GRID LEAK RESISTANCE	0.5	MEGOHMS
CATHODE CURRENT WITH STATIONARY SPOT	0.5	UA
CHARGE DENSITY DURING BEAM DEFLECTION	1.5	UC/CM^2

AVERAGE OPERATING CONDITIONS:

ANODE VOLTAGE	10	KV
GRID NO. 2 VOLTAGE	300	VOLTS
GRID NO. 3 VOLTAGE	0 - 400	VOLTS
CUT-OFF VOLTAGE (NOTE 1)	-40 - 86	VOLTS
ERASING WATTAGE (NOTE 2)	75	WATTS

NOTE 1: THE CUT-OFF VOLTAGE CORRESPONDS TO THAT VOLTAGE WHICH DOES NOT RESULT IN A DISCOLORATION OF THE SCREEN BY THE SHARPLY FOCUSED BEAM.

NOTE 2: TO ERASE THE PICTURE, AN ERASING VOLTAGE MUST BE APPLIED TO THE TWO CONTACTS AT THE NARROW BULB SIDES. IT IS RECOMMENDED THAT THE VOLTAGE WHICH WILL RESULT IN AN ERASING POWER OF 75 WATTS BE FOUND BY EXPERIMENT. THE RESISTANCE OF THE ERASING COAT IS 80 TO 120 OHMS.

HEATER-CATHODE VOLTAGE:

HEATER NEGATIVE		
DURING THE FIRST 15 SECONDS OF THE HEATING-UP PERIOD	410	VOLTS
AFTER THE HEATING-UP PERIOD	200	VOLTS
HEATER POSITIVE	125	VOLTS

CAPACITANCES

CONTROL GRID TO ALL OTHER ELECTRODES	7	UUF
CATHODE TO ALL OTHER ELECTRODES	5	UUF
ANODE TO EXTERNAL COATING	400 - 800	UUF

ADDITIONAL INFORMATION FOR SPECIFIC APPLICATIONS CAN BE OBTAINED FROM THE

ELECTRON TUBE APPLICATIONS SECTION
ITT COMPONENTS DIVISION
POST OFFICE BOX 412
CLIFTON, NEW JERSEY

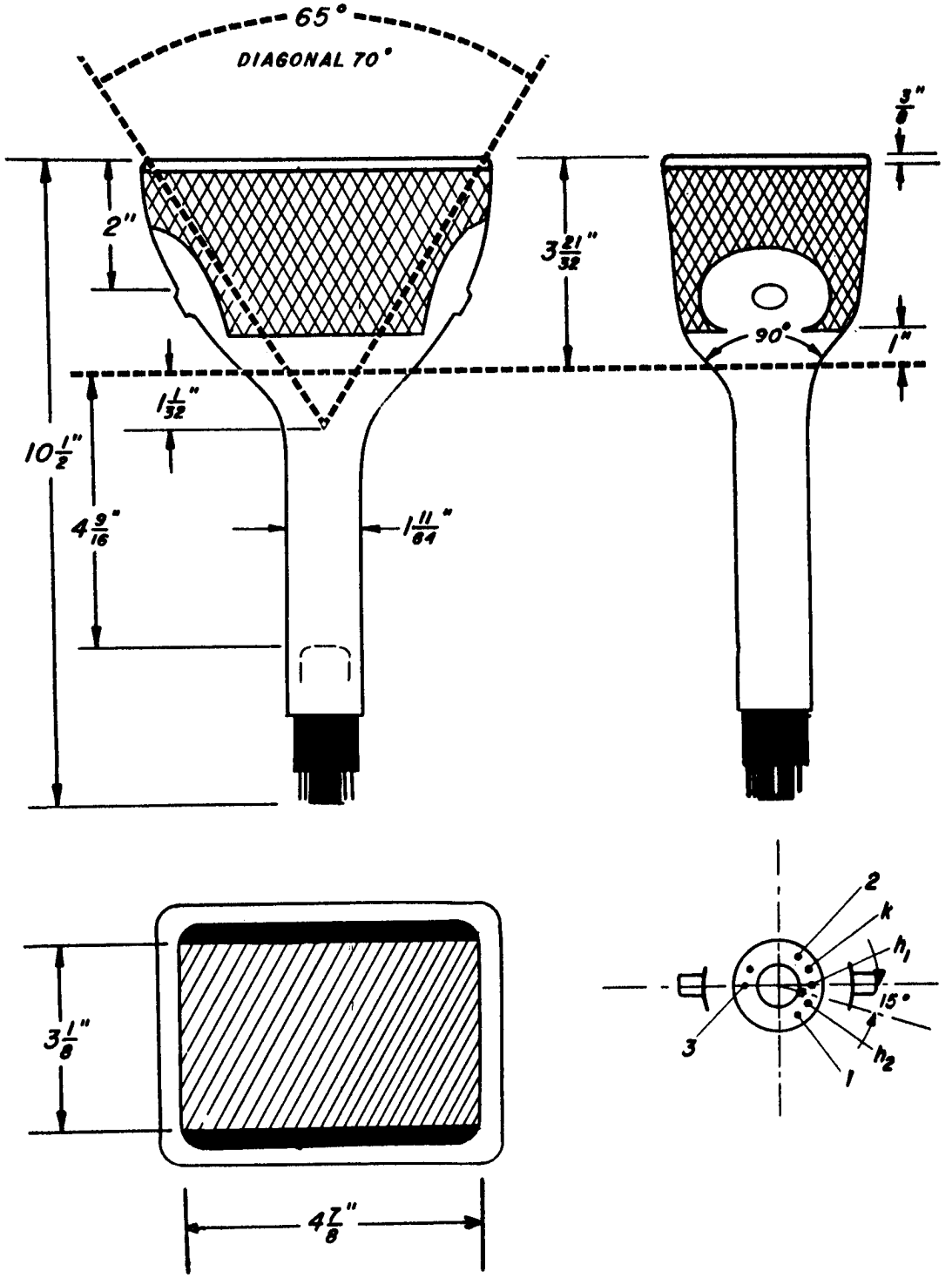

OUTLINE

D-3003/AS 17-21 STORAGE TUBE

GENERAL DESCRIPTION:

Type D-95B is a mechanically modified version of type D-95. Silicone rubber insulated flying leads attached to the tube with Silastic insulation are provided for altitude operation, in place of the Small Shell Duodecal 5 pin base.

Capacitance of control grid to all other elements is increased to 13 μμfd by the base and lead configuration.

All other characteristics are the same as type D-95 and additional information can be obtained by referring to the D-95 data sheet.

Additional information for specific applications can be obtained from the

Electron Tube Applications Section
ITT Components Division
P. O. Box 412
Clifton, New Jersey

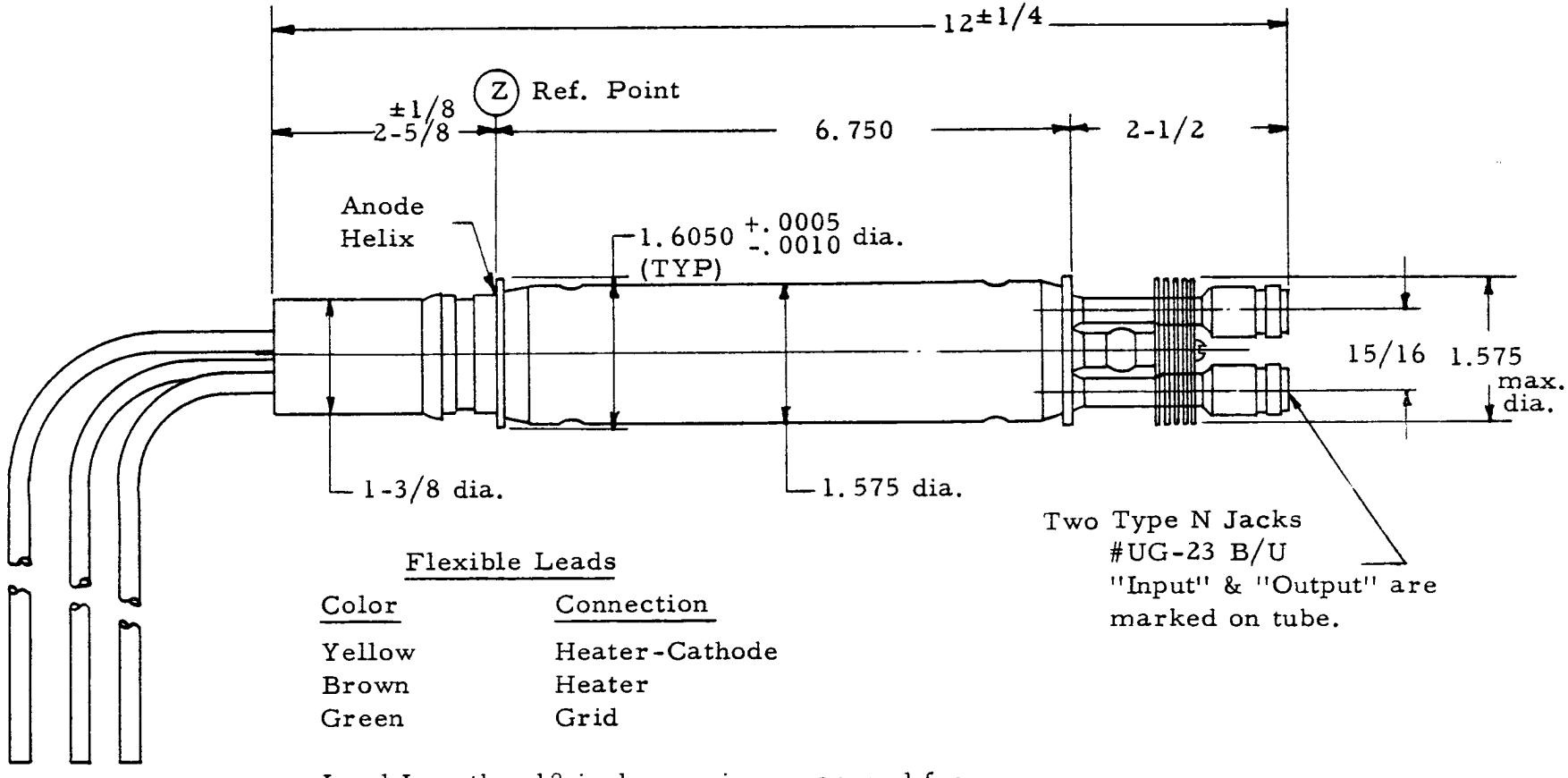

Flexible Leads

Color	Connection
Yellow	Heater-Cathode
Brown	Heater
Green	Grid

Lead Length = 18 inches, min. measured from ref. point Z to end of lead.

TRAVELING WAVE TUBE TYPE D-95B

TENTATIVE

DESCRIPTION:

THE E-38 IS A UNIPOTENTIAL CATHODE THREE ELEMENT HYDROGEN THYRATRON. AN ELECTRICALLY HEATED TITANIUM HYDRIDE RESERVOIR IS CONNECTED INTERNALLY ACROSS THE CATHODE HEATERS. THE E-38 WAS DEVELOPED TO MEET THE NEEDS OF THE MODULATOR DESIGNER FOR A LOW PLATE VOLTAGE THYRATRON FOR OPERATION AT A HIGH DUDY CYCLE.

ELECTRICAL DATA, GENERAL:

	Nom.	Min.	Max.		
Heater Voltage	6.3	5.7	6.6		Volts AC
Heater Current (at 6.3 volts)		5.5	6.7		Amperes
Minimum Heating Time				3	Minutes

MECHANICAL DATA, GENERAL:

Mounting Position		Any
Base		Per Outline
Cooling (Note 1)		
Net Weight	0.3	Pounds
Dimensions		Per Outline

RATINGS:

Max. Peak Anode Voltage, Forward	5.0	Kilovolts
Max. Peak Anode Voltage, Inverse (Note 2)	5.0	Kilovolts
Min. Anode Supply Voltage	0.3	Kilovolts DC
Max. Peak Anode Current	85	Amperes
Max. Average Anode Current	100	Milliamperes
Max. RMS Anode Current (Note 3)	2.9	Amperes AC
Max. epy x ib x prr	2.5	x 10^9
Max. Anode Current Rate of Rise	1200	Amps / u sec.
Peak Trigger Voltage (Note 4)		
Max. Anode Delay Time (Note 5)	0.6	Microsecond
Max. Anode Delay Time Drift	0.15	Microsecond
Max. Time Jitter (Note 6)	0.01	Microsecond
Ambient Temperature	-50° to + 90°	C

Note 1:

Cooling of the anode lead is permissible, but there shall be no air blast directly on the bulb.

Note 2:

In pulsed operation, the peak inverse voltage, exclusive of spike of .05 us maximum duration, shall not exceed 2000 V during the first 25 us after the pulse.

Note 3:

The root mean square anode current shall be computed as the square root of the product of peak current and the average current.

Note 4:

Driver pulse, measured at tube socket with thyratron grid disconnected; egy = 175 V (min.), time of rise = 0.5 us (max.), grid pulse duration = 2 us (min.), impedance of driver circuit = 1500 ohms (max.).

Note 5:

The time of anode delay is measured between the 26 per cent point on the rising portion of the unloaded grid voltage pulse and the point at which anode conduction first evidences itself on the loaded grid pulse.

Note 6:

Time jitter is measured at the 50 per cent point on the anode current pulse.

Additional information for specific applications can be obtained from the

Electron Tube Applications Section
ITT Components Division
Post Office Box 412
Clifton, New Jersey

OUTLINE
E - 38

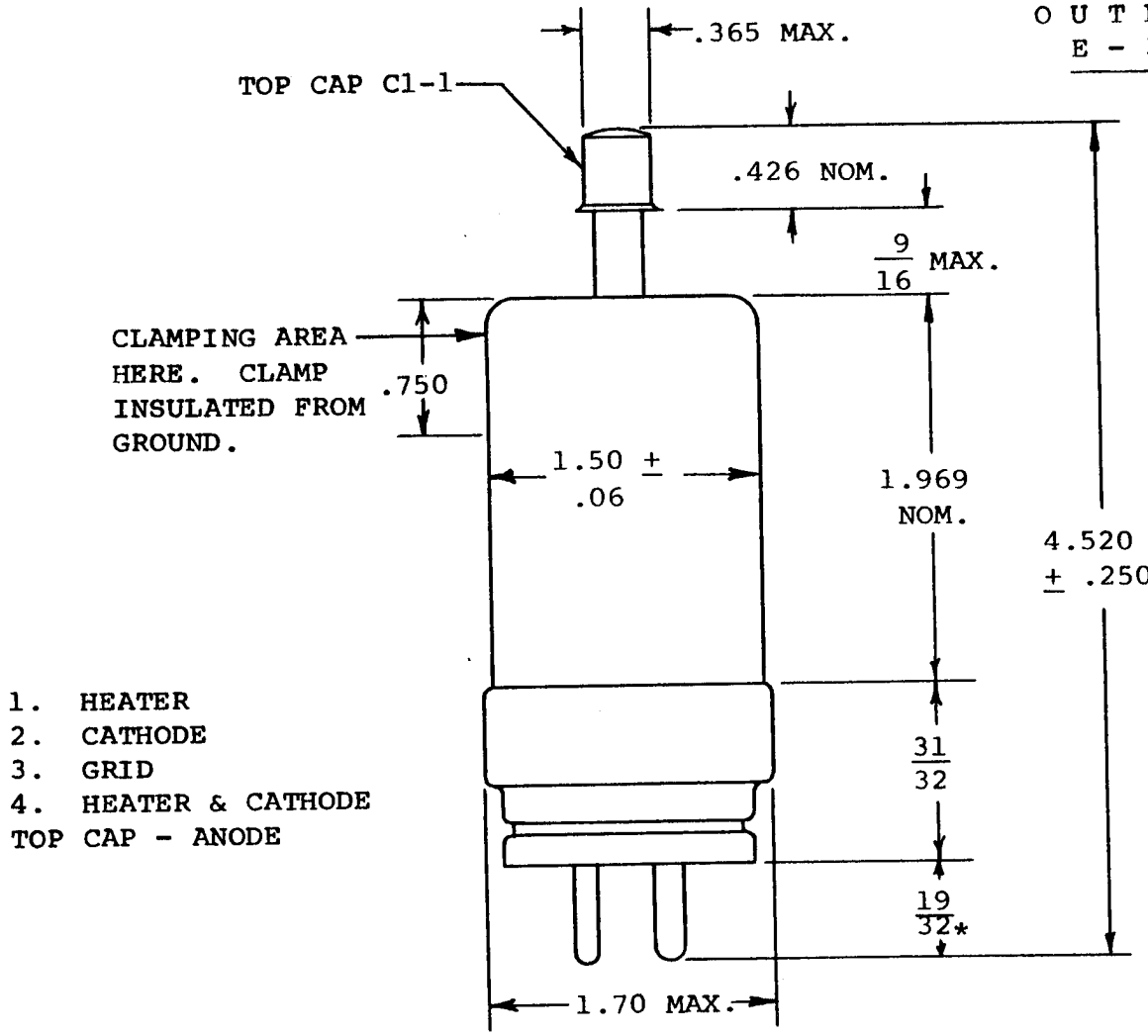

1. HEATER
2. CATHODE
3. GRID
4. HEATER & CATHODE

TOP CAP - ANODE

*ON FINISHED TUBE ADD .030 FOR SOLDER

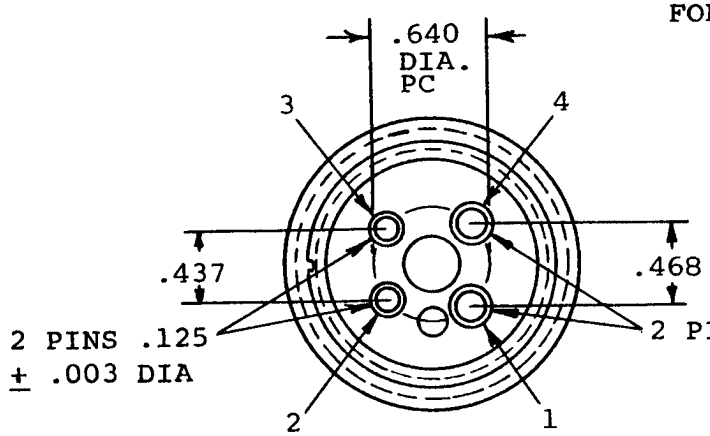

PIN ARRANGEMENT AND DIMENSIONS ONLY
AS PER A4-9 MIL-E-1C

ELECTRON TUBE DEPARTMENT ■ COMPONENTS DIVISION
INTERNATIONAL TELEPHONE AND TELEGRAPH CORPORATION, CLIFTON, NEW JERSEY

SPECIAL VALVES

Forced-Air-Cooled Industrial Triode

Code: ESA1500

This valve is designed for induction and dielectric heating applications and is capable of operation at frequencies up to 40 MHz.

CATHODE

Direct'y i eated thoriated tungsten		
Filament voltage	8	V
Filament current (Note 1)	26	A
Maximum usable emission	6	A

Note 1.—The filament is suitable for direct switching without additional current limitation to the circuit.

CHARACTERISTICS

Amplification factor	at V_a = 5kV, I_a = 400mA	24	
Mutual conductance		7·5	mA/V
Perveance		0·56	$mA/V^{3/2}$
Anode impedance		3·2	kΩ

DIRECT INTERELECTRODE CAPACITANCES

Grid to anode	11·5	pF
Grid to filament	14·5	pF
Anode to filament	0·8	pF

MECHANICAL DATA

Dimensions	As shown in outline drawing
Mounting position	Vertical, anode downwards (Note 2)

Note 2.—Special glass support tubes, details of which are given on pages 6, 7 and 8, can be supplied under codes GC1, GC2 and GC7 as separate accessories.

COOLING

This is by forced-air blast, and should be employed for all conditions of valve service, including filament dissipation only.

It is recommended that a minimum air flow of 300 ft^3/min (85 m^3/min) at maximum power output be used. Direction of flow is through the anode cooler and over the glass bulb.

At the higher frequencies grid connectors should be designed to assist cooling, and both connections should be made to reduce the current taken by each pin.

Care should be taken to ensure all connections to the valve make good electrical contact to avoid overheating pins and seals.

Standard Telephones and Cables Limited
Valve Division, Brixham Road, Paignton, Devon
Telephone: Paignton 50762 Telex: 4230
London Sales Office, Telephone: 01-300 3333 Telex: 21836
C O M P O N E N T S G R O U P

STC

Code: ESA1500

CONTINUED

MAXIMUM RATINGS AND TYPICAL OPERATING CONDITIONS

Class C. Industrial Heating R.F. Oscillator

MAXIMUM RATINGS

Maximum direct anode voltage (peak value of direct voltage plus ripple)	6	kV
Maximum direct anode current	1·5	A
Maximum direct anode dissipation (continuous)	3	kW
Maximum direct grid dissipation (continuous)	200	W
Maximum direct grid current (Note 3)	330	mA
Maximum negative grid bias	−1 000	V
Maximum frequency for above ratings	40	MHz

Note 3.—This figure is given for guidance. Grid dissipation is absolute figure.

TYPICAL OPERATING CONDITIONS

Direct anode voltage	4	5	6	kV
Direct grid voltage	−275	−250	−350	V
Direct anode current	1·25	1·55	1·5	A
Peak r.f. grid voltage	730	710	810	V
Direct grid current (Note 4)	200 (300)	145 (250)	135 (230)	mA
Grid dissipation (Note 4)	65	70	65	W
Grid resistor	1·4	1·75	2·6	kΩ
Power input	7·5	7·75	9	kW
Power output (oscillator)	3·5	5·3	6·3	kW
Power into load at 85% transfer efficiency	3	4·5	5·35	kW

Note 4.—Subject to wide variation dependent upon the impedance of the load circuit. The values of current shown in brackets are typical of off-load conditions but are given for guidance only: practical figures are dependent upon compensatory devices in the grid circuit.

NOTES

The typical operating conditions given are for valve service at a class C self-oscillator and are calculated assuming a d.c. or three-phase full-wave rectified anode voltage. Where conditions of service make the valve liable to excessive mains variation, poor regulation of supplies, or power supplies with a high peak to mean ratio, care should be taken to see that the limiting values are not exceeded.

It is recommended that a protective resistance of 10 Ω/kV be connected between the h.t. supply and the valve anode to avoid damage to the valve in the event of intermittent flash-over.

Code: ESA1500

CONTINUED

Class B. A.F. Power Amplifier or Modulator
(For balanced 2-valve operation)

MAXIMUM RATINGS

Maximum direct anode voltage	6	kV
Maximum direct anode current	1·5	A
Maximum direct anode dissipation	3	kW
Maximum direct grid voltage	−1	kV
Maximum direct grid dissipation	200	W

TYPICAL OPERATING CONDITIONS

Direct anode voltage	5	kV
Direct grid voltage	−200	V
Direct anode current (maximum drive), per valve	1	A
Direct anode current (zero drive), per valve	0·1	A
Load resistor, anode-to-anode	5·1	kΩ
Peak a.f. grid to grid voltage	1 040	V
Grid drive power, approximately 2 valves	75	W
Direct grid current, per valve	76	mA
Direct grid dissipation, per valve	22	W
Direct anode dissipation, per valve	2	kW
Power output (2 valves)	6	kW

STC

Code: ESA1500

CONTINUED

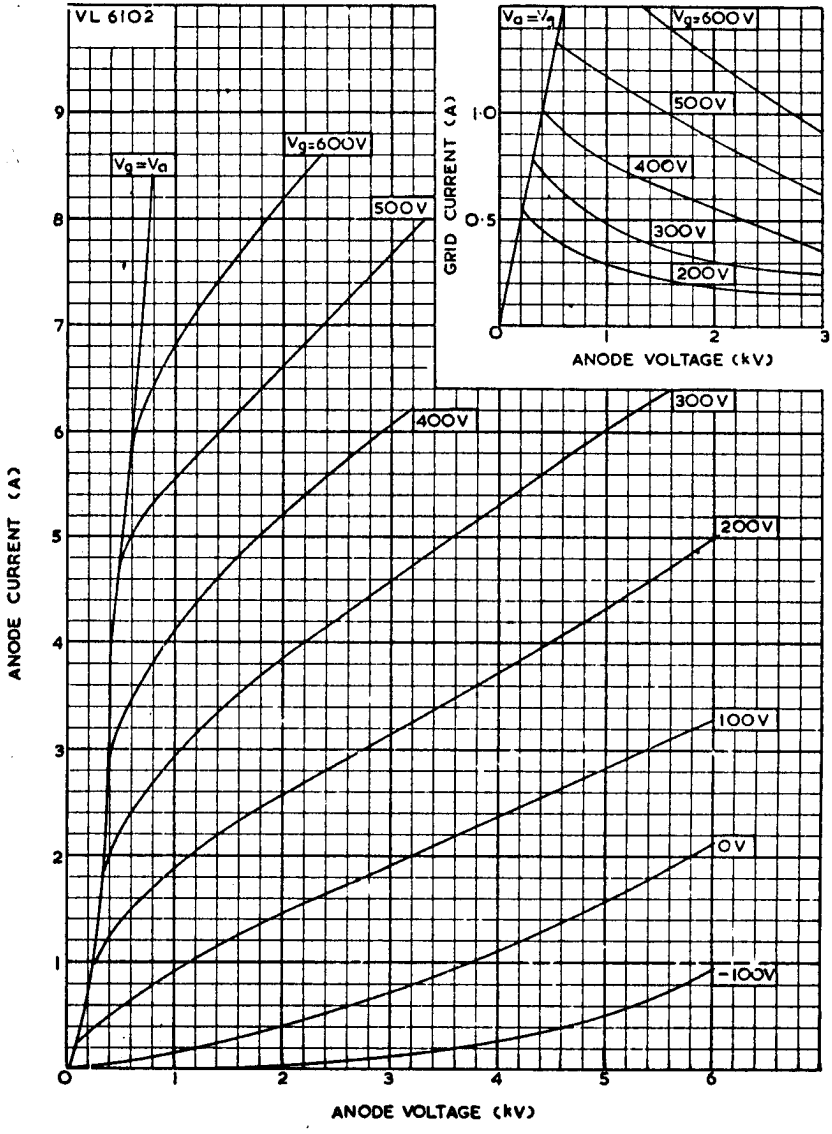

Code: ESA1500

CONTINUED

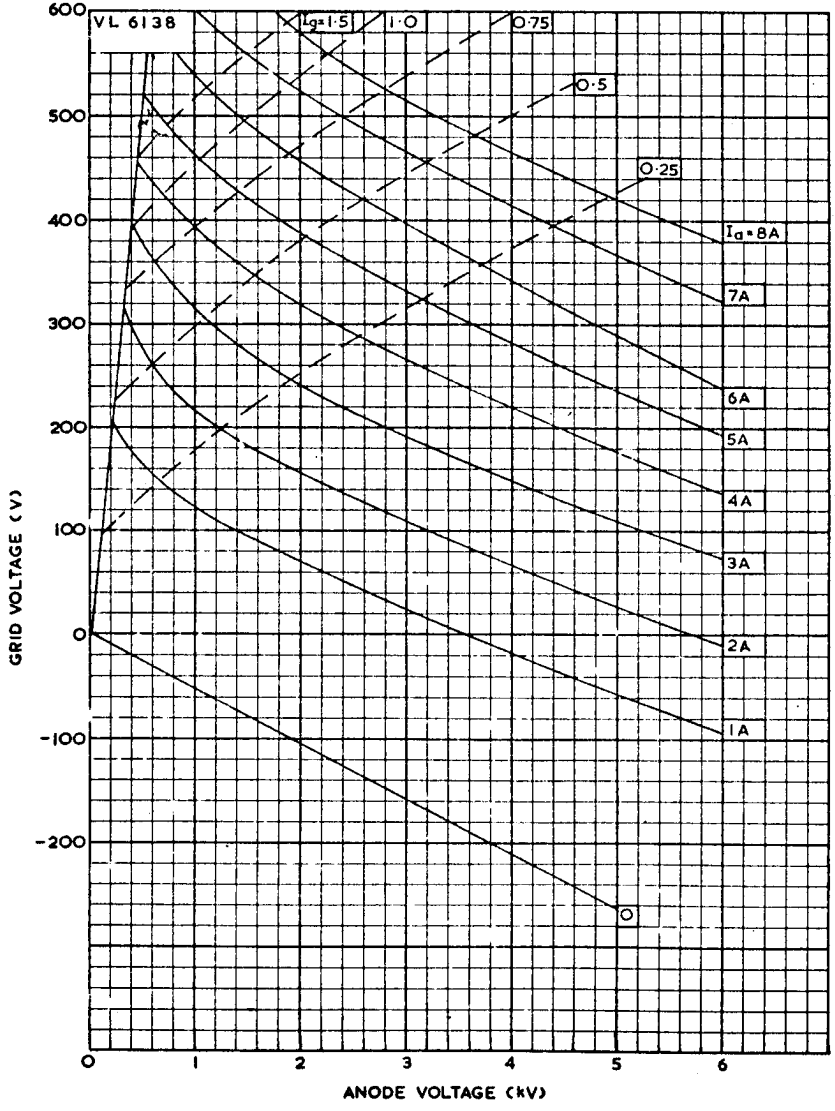

STC

Code: ESA1500

CONTINUED

ESA1500 Outline

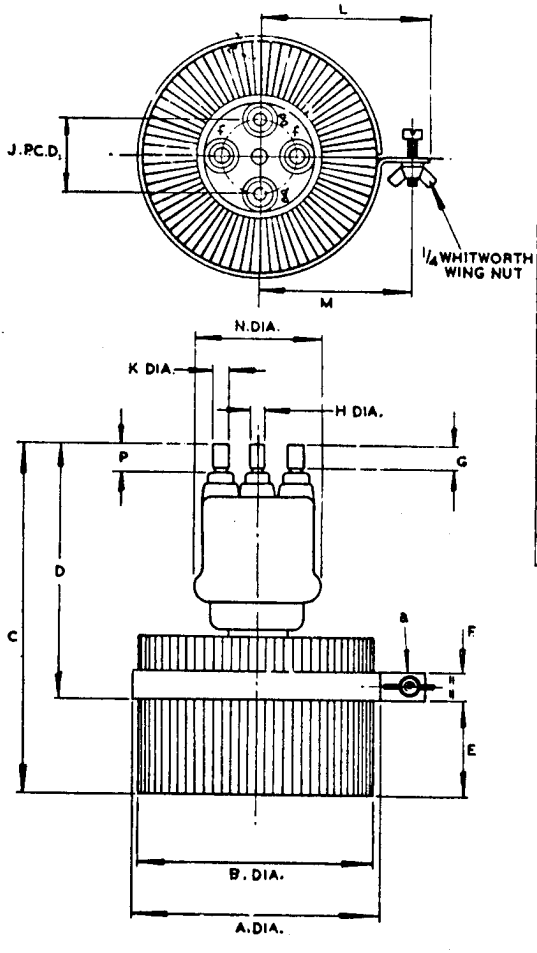

DIM.	INCHES	MILLIMETRES
A	$6\frac{3}{8}$ MAX.	161,9 MAX.
B	6 MAX.	152,4 MAX.
C	$8\frac{3}{4}$ MAX.	222,3 MAX.
D	$5\frac{15}{16} \pm \frac{1}{4}$	150,8 ± 6,4
E	$2\frac{7}{16} \pm \frac{1}{8}$	61,9 ± 3,2
F	$\frac{3}{4} \pm \frac{1}{32}$	19,1 ± 0,8
G	$\frac{19}{32}$ MIN.	15,0 MIN.
H	0·312 ± 0·005	7,94 ± 0,13
J	1·890 ± 0·010	48,00 ± 0,25
K	0·375 ± 0·005	9,53 ± 0,13
L	$4\frac{3}{8}$ MAX.	111,1 MAX.
M	$3\frac{29}{32} \pm \frac{1}{16}$	99,2 ± 1,6
N	3·150 MAX.	80,00 MAX.
P	$\frac{3}{4}$ MAX.	19,0 MAX.

BASIC DIMENSIONS ARE INCHES

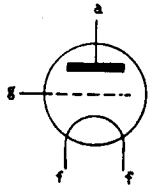

FEDERAL POWER TRIODE
Type F-3X2500F3
2.5 Kilowatts Plate Dissipation

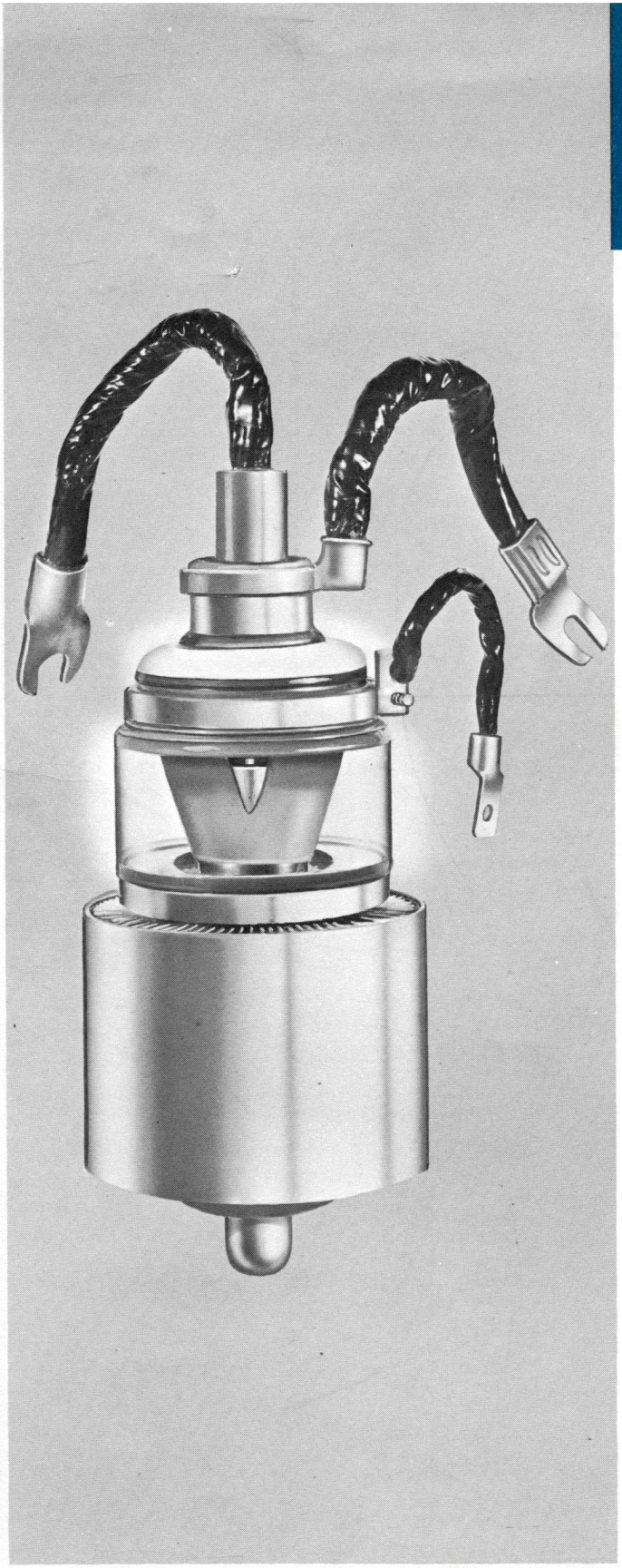

Type F-3X2500F3 has Grid and Filament connectors attached, for the convenience of the equipment designer.

GENERAL DATA

DESCRIPTION:

FEDERAL'S Type F-3X2500F3 is a three-electrode tube designed for use in industrial and communications applications as an R-F amplifier, oscillator or modulator service. The anode, forced-air-cooled, is capable of dissipating 2.5 kilowatts. The cathode is a thoriated tungsten filament. Maximum ratings apply up to 30 megacycles.

Electrical:

▶ Filament Voltage	7.5 Volts
▶ Filament Current	51 Amperes
▶ Filament Starting Current	100 Amps. max.
▶ Amplification Factor (average)	20
▶ Transconductance	
I_b = .830 amps.	
E_b = 3000 Volts	20,000 μmhos
▶ Interelectrode Capacitances	
Grid-Plate	20$\mu\mu$f
Grid-Filament	36$\mu\mu$f
Plate-Filament	1.2$\mu\mu$f

Mechanical:

▶ Mounting Position— Vertical, Anode Up or Down	
▶ Type of Cooling—Forced Air	
Maximum Incoming Air Temperature	45° C
▶ Required Air Flow on Anode (1)	
Plate Dissipation (Kilowatts)	2.5
Air Flow—Minimum Cubic Feet Per Min.	120
Pressure—Inches of Water	1.0
▶ Required Air Flow on Stem (2) —Cubic Feet Per Min.	6
▶ Maximum Glass Temperature	150° C
▶ Net Weight Approximate	7.5 Lbs.

NOTE 1: Cooling air to radiator and filament seals should be applied before filament power and should be continued for five minutes after removal of filament power.

NOTE 2: Minimum flow to be directed toward filament stem structure, between the inner and outer filament conductors.

Copyright 1953, Federal Telephone and Radio Company

FEDERAL POWER TRIODE
Type F-3X2500F3
2.5 Kilowatts Plate Dissipation

Federal's longer tube life means lower costs. Increase the life of the tubes in your equipment, and unit costs per hour go down.

RADIO FREQUENCY POWER AMPLIFIER OR OSCILLATOR

(Frequencies below 30 Mc.)
Class-C FM or Telegraphy
(Key-down conditions, per tube)

MAXIMUM RATINGS

D-C PLATE VOLTAGE	6000	MAX. VOLTS
D-C PLATE CURRENT	2.5	MAX. AMPS
PLATE DISSIPATION	2500	MAX. WATTS
ANODE-COOLER CORE TEMPERATURE	150	MAX. °C
GRID DISSIPATION	150	MAX. WATTS

TYPICAL OPERATION

(Frequencies below 30 Mc., per tube)

D-C Plate Voltage	4000	5000	6000	Volts
D-C Plate Current	2.5	2.5	2.08	Amps
D-C Grid Voltage	—300	—450	—500	Volts
D-C Grid Current	245	265	180	Ma.
Peak R. F. Grid Input Voltage	580	750	765	Volts
Driving Power (approx.)	142	197	136	Watts
Grid Dissipation	68	78	46	Watts
Plate Power Input	10,000	12,500	12,500	Watts
Plate Dissipation	2500	2500	2500	Watts
Plate Power Output	7500	10,000	10,000	Watts

PLATE MODULATED RADIO FREQUENCY AMPLIFIER

(Frequencies below 30 Mc.)
Class-C Telephony
(Carrier conditions, per tube)

MAXIMUM RATINGS

D-C PLATE VOLTAGE	5000	MAX. VOLTS
D-C PLATE CURRENT	2.0	MAX. AMPS
PLATE DISSIPATION	1670	MAX. WATTS
ANODE-COOLER CORE TEMPERATURE	150	MAX. °C
GRID DISSIPATION	150	MAX. WATTS

TYPICAL OPERATION

(Frequencies below 30 Mc., per tube)

D-C Plate Voltage	4000	4500	5000	Volts
D-C Plate Current	1.67	1.55	1.45	Amps
Total Bias Voltage	—450	—500	—550	Volts
Fixed Bias Voltage	—230	—325	—410	Volts
Grid Resistor	1500	1500	1400	Ohms
D-C Grid Current	150	120	100	Ma.
Peak R. F. Grid Input Voltage	680	720	760	Volts
Driving Power (approx.)	102	86	76	Watts
Grid Dissipation	35	26	21	Watts
Plate Power Input	6670	6970	7250	Watts
Plate Dissipation	1670	1670	1670	Watts
Plate Power Output	5000	5300	5580	Watts

AUDIO FREQUENCY POWER AMPLIFIER AND MODULATOR

Class B (Sinusoidal wave, two tubes unless otherwise specified)

MAXIMUM RATINGS

D-C PLATE VOLTAGE	6000	MAX. VOLTS
MAX.-SIGNAL D-C PLATE CURRENT, PER TUBE	2.5	MAX. AMPS
PLATE DISSIPATION, PER TUBE	2500	MAX. WATTS
ANODE-COOLER CORE TEMPERATURE	150	MAX. °C

TYPICAL OPERATION CLASS AB_2 (Two Tubes)

D-C Plate Voltage	4000	5000	6000	Volts
D-C Grid Voltage (approx.)*	—150	—190	—240	Volts
Zero-Signal D-C Plate Current	0.6	0.5	0.4	Amps
Max.-Signal D-C Plate Current	4.0	3.2	3.0	Amps
Effective Load, Plate to Plate	2200	3600	4650	Ohms
Peak A-F Grid Input Voltage (per tube)	340	360	390	Volts
Max.-Signal Peak Driving Power	340	230	225	Watts
Max.-Signal Nominal Driving Power (approx.)	170	115	113	Watts
Max.-Signal Plate Power Output	11,000	11,000	13,000	Watts

*Adjust to give stated zero-signal plate current.

TYPICAL OPERATION CLASS AB_2 (Two Tubes)

Modulator service for 4000 and 5000 volt operation, to modulate one or two tubes, as shown under "Plate Modulated Radio Frequency Amplifier"

D-C Plate Voltage	4000	5000	4000	5000	Volts
D-C Grid Voltage (approx.)*	—155	—200	—145	—190	Volts
Zero-Signal D-C Plate Current	0.4	0.4	0.6	0.5	Amps
Max.-Signal D-C Plate Current	1.35	1.13	2.70	2.26	Amps
Effective Load, Plate to Plate	6600	10,000	3300	5000	Ohms
Peak A-F Grid Input Voltage (per tube)	240	275	285	310	Volts
Max.-Signal Peak Driving Power	42	40	134	118	Watts
Max.-Signal Nominal Driving Power (approx.)	21	20	67	59	Watts
Max.-Signal Plate Power Output	3700	4000	7400	8000	Watts
Will Modulate one Tube R. F. Final Input of	6670	7250			Watts
Will Modulate two Tubes R. F. Final Input of			13,340	14,500	Watts

*Adjust to give stated zero-signal plate current.

Precision craftsmanship was initiated by Federal in the earliest days of tube manufacture, and has been maintained ever since.

FEDERAL POWER TRIODE
Type F-3X2500F3
2.5 Kilowatts Plate Dissipation

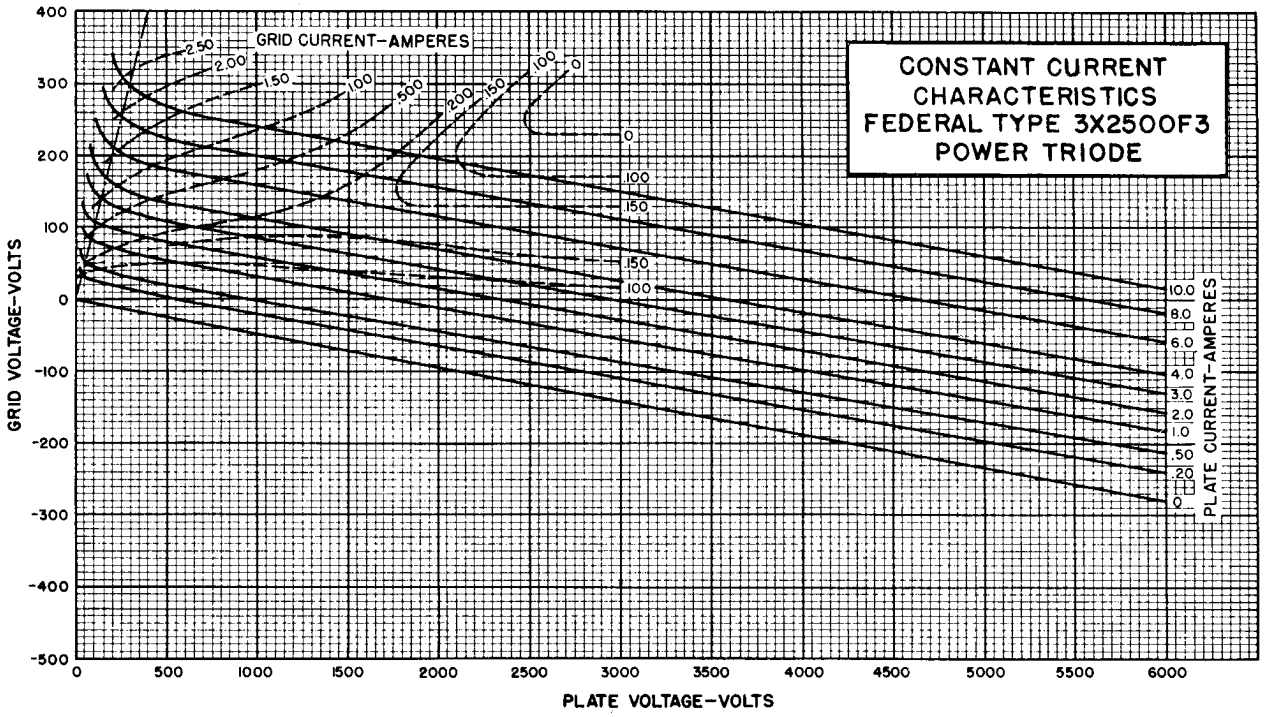

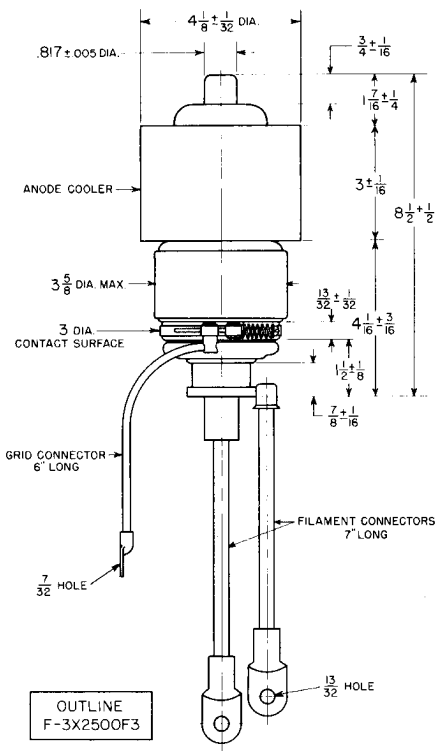

Federal Telephone and Radio Company
100 Kingsland Road VACUUM TUBE DEPARTMENT Clifton, New Jersey

Federal Always Has
Made Better Tubes

Form F-598 Printed in U. S. A.

DESCRIPTION:

THE F-7C23 IS A THREE-ELECTRODE TUBE DESIGNED FOR USE IN HIGH VOLTAGE PULSE OPERATION. THE ANODE IS FORCED AIR-COOLED AND CAPABLE OF DISSIPATING 1,200 WATTS. THE CATHODE IS A THORIATED TUNGSTEN FILAMENT. MAXIMUM RATINGS APPLY UP TO 5 MEGACYCLES.

ELECTRICAL:

FILAMENT VOLTAGE	11.0	VOLTS
FILAMENT CURRENT	29.0	AMPERES
FILAMENT STARTING CURRENT	58	AMPERES
AMPLIFICATION FACTOR, AT E_C = -50 V; I_B = 0.2 AMP.	25	
INTERELECTRODE CAPACITANCES		
GRID-PLATE	12.0	UUF
GRID-FILAMENT	12.5	UUF
PLATE-FILAMENT	1.7	UUF

MECHANICAL:

MOUNTING POSITION	VERTICAL,	ANODE DOWN
TYPE OF COOLING - FORCED AIR		
MAX. INCOMING AIR TEMPERATURE	45°	C
REQUIRED AIR FLOW ON ANODE		
CUBIC FEET PER MINUTE	75	
MAXIMUM GLASS TEMPERATURE	150°	C
NET WEIGHT, APPROXIMATE	5-1/4	POUNDS

MAXIMUM RATINGS AND TYPICAL OPERATING CONDITIONS

RADIO-FREQUENCY POWER AMPLIFIER AND OSCILLATOR - PULSED OPERATION

MAXIMUM RATINGS, ABSOLUTE VALUES:

DC PLATE VOLTAGE	17,500	VOLTS
DC GRID VOLTAGE	-2,000	VOLTS
DC PLATE CURRENT	0.100	AMPERE
DC GRID CURRENT	0.010	AMPERE
PLATE DISSIPATION	1,200	WATTS
MAX. PULSE WIDTH	90	u SECONDS
MAX. DUTY	0.005	

TYPICAL OPERATION:
(UNLESS OTHERWISE SPECIFIED, VALUES ARE FOR TWO TUBES)

DC PLATE VOLTAGE	15,000	VOLTS
DC PLATE CURRENT	.16	AMPERES
DC GRID CURRENT	1.25	MA
AVERAGE POWER OUTPUT	120	WATTS
PEAK POWER OUTPUT	120	KILOWATTS

ADDITIONAL INFORMATION FOR SPECIFIC APPLICATIONS CAN BE OBTAINED FROM THE

ELECTRON TUBE APPLICATIONS SECTION
ITT COMPONENTS DIVISION
POST OFFICE BOX 412
CLIFTON, NEW JERSEY

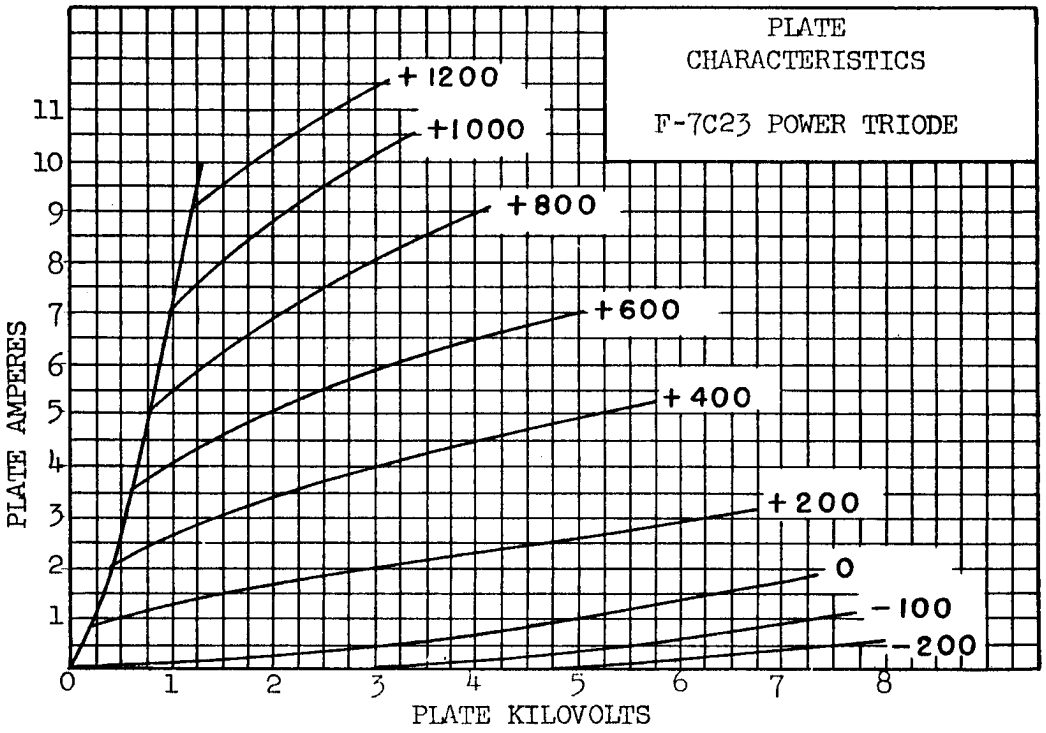
PLATE
CHARACTERISTICS
F-7C23 POWER TRIODE
+1200
+1000
+800
+600
+400
+200
0
-100
-200
PLATE AMPERES
PLATE KILOVOLTS

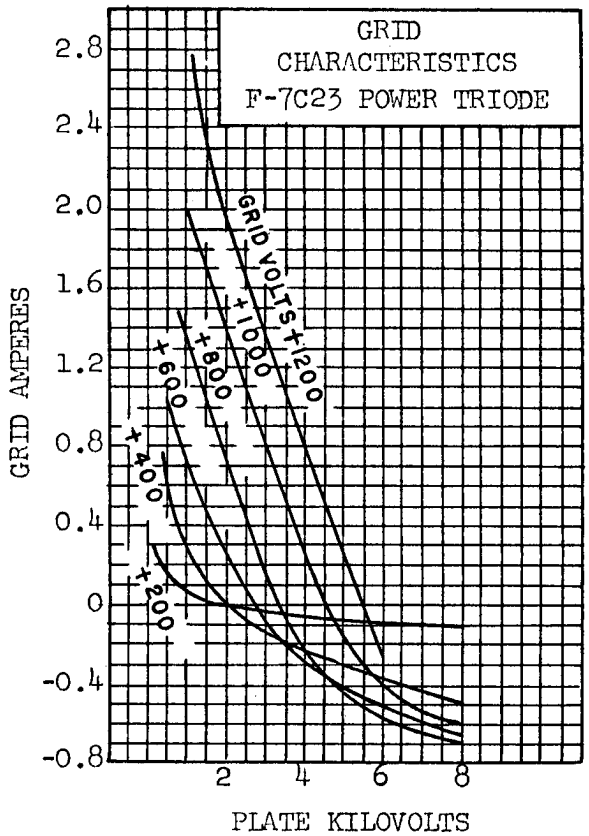
GRID
CHARACTERISTICS
F-7C23 POWER TRIODE
GRID VOLTS +1200
+1000
+800
+600
+400
+200
GRID AMPERES
PLATE KILOVOLTS

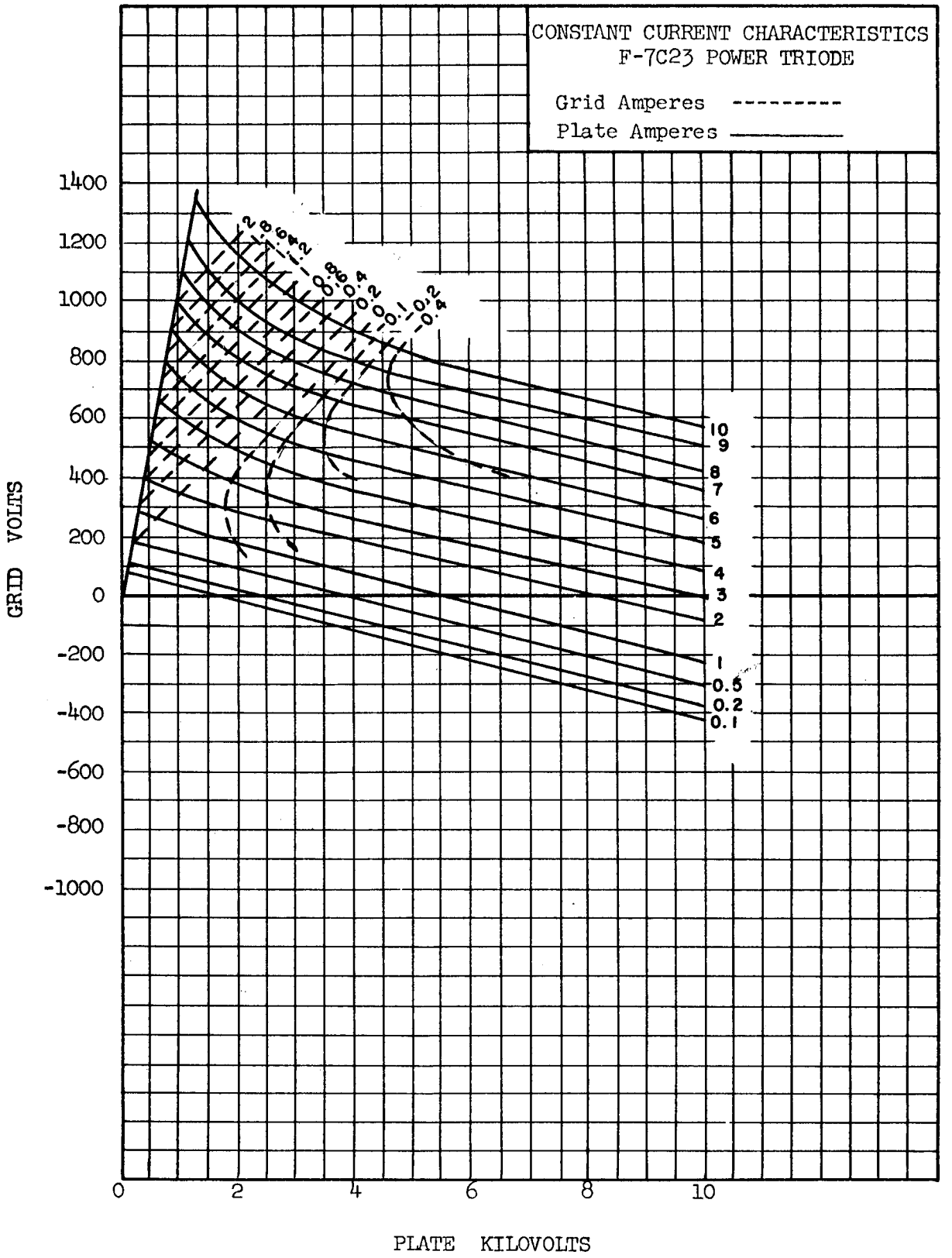
CONSTANT CURRENT CHARACTERISTICS
F-7C23 POWER TRIODE
Grid Amperes ---------
Plate Amperes ———————
GRID VOLTS
1400
1200
1000
800
600
400
200
0
-200
-400
-600
-800
-1000
0
2
4
6
8
10
PLATE KILOVOLTS
2
1.6
1.2
0.8
0.6
0.4
0.2
0.1
0.2
0.4
10
9
8
7
6
5
4
3
2
1
0.5
0.2
0.1

Color Code

Fil. Term. - Yellow
Fil. Center Term. - Red
Grid Term. - Black

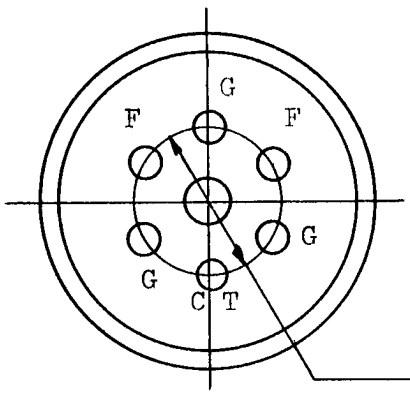

1.500 ±.125 dia.

Tubulation tip off $\frac{1}{8}$ below top of terminals.

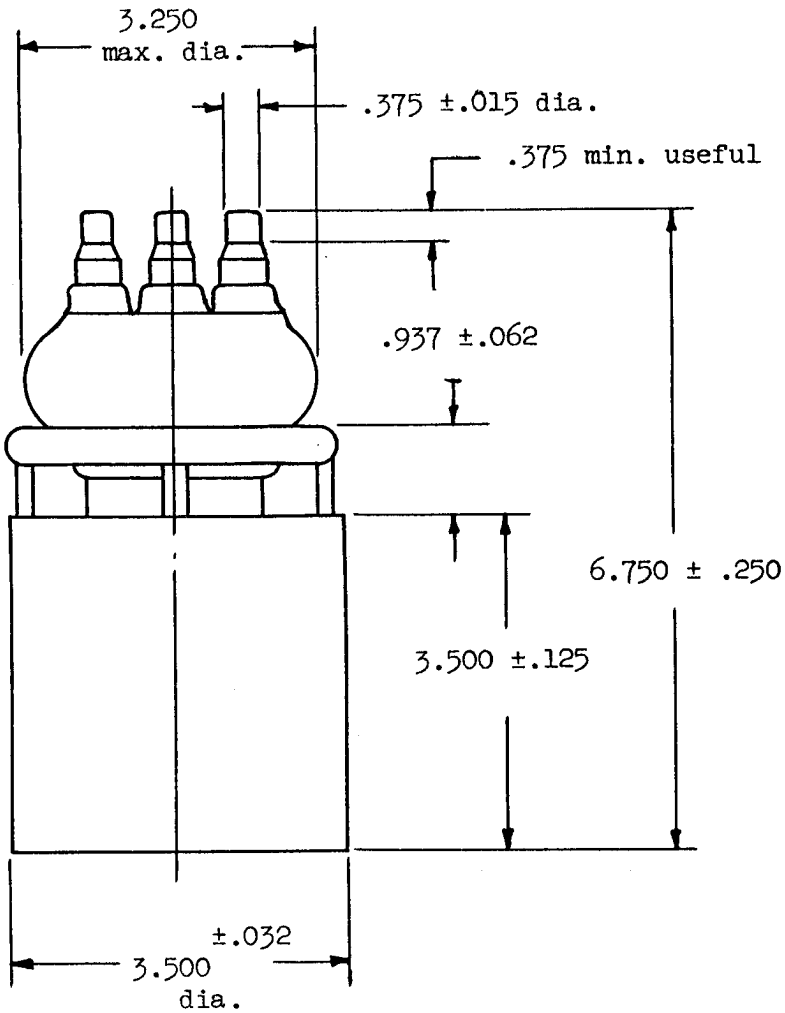

OUTLINE
F-7C23 POWER TRIODE

FEDERAL POWER TRIODE
Type F-7C25
2.5 Kilowatts Plate Dissipation

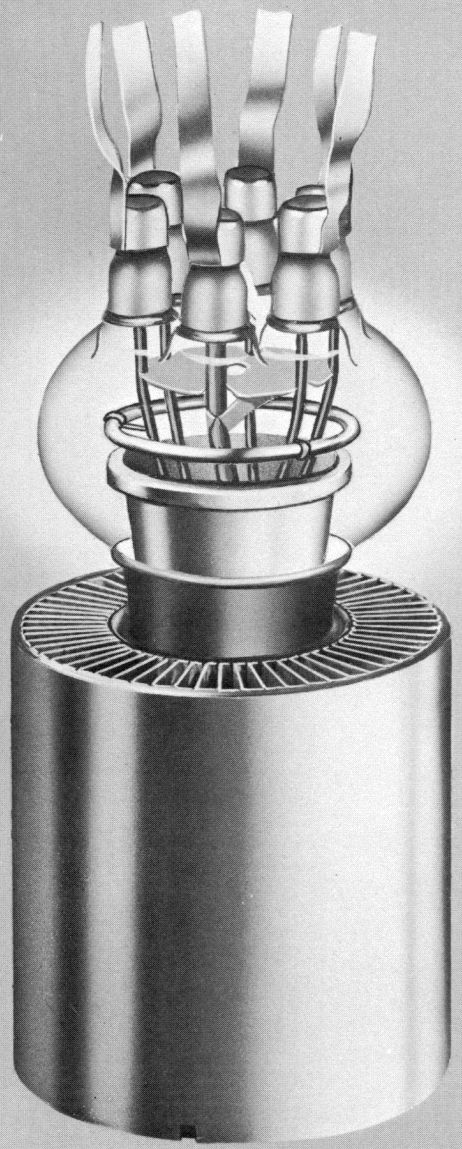

GENERAL DATA

DESCRIPTION:

Federal's Type F-7C25 is a three electrode tube designed for use in industrial applications. The relatively wide spacing between the elements, and the lack of internal insulators make this type meet the severe conditions of radio frequency heating service. The anode is air-cooled, capable of dissipating 2.5 kilowatts. The cathode is a thoriated tungsten filament. Maximum ratings apply up to 30 megacycles.

Electrical:

Filament Voltage	11 Volts
Filament Current	28 Amperes
Filament Starting Current	56 Amperes
Filament Cold Resistance	.047 Ohms
Peak Cathode Current	10 Amperes
Amplification Factor, E_b=3,000 Volts, I_b=0.200 Amps.	25
Interelectrode Capacitances	
Grid-Plate	13.2 $\mu\mu$f
Grid-Filament	14.5 $\mu\mu$f
Plate-Filament	1.7 $\mu\mu$f

Mechanical:

Mounting Position—Vertical, Anode Down			
Type of Cooling—Forced Air			
Maximum Incoming Air Temperature			45° C
Required Air Flow on Anode			
Plate Dissipation (Kilowatts)	2.5	2.0	1.5
Air Flow—Cubic Feet Per Min.	150	120	90
Pressure—Inches Water	2.5	1.6	0.9
Maximum Glass Temperature			150° C
Net Weight, Approximate			5 Pounds

Copyright 1953, Federal Telephone and Radio Company

FEDERAL POWER TRIODE
Type F-7C25
2.5 Kilowatts Plate Dissipation

Federal's longer tube life means lower costs. Increase the life of the tubes in your equipment, and unit costs per hour go down.

Maximum Ratings and Typical Operating Conditions

For maximum frequency of 50 megacycles

RADIO-FREQUENCY POWER AMPLIFIER AND OSCILLATOR—CLASS C TELEGRAPHY

Maximum Ratings

DC Plate Voltage	5,000 Volts
DC Grid Voltage	—1,500 Volts
DC Plate Current	1.3 Amperes
DC Grid Current	0.150 Amperes
Plate Input	6.5 Kilowatts
Plate Dissipation	2.5 Kilowatts

Typical Operation

DC Plate Voltage	4,000	4,500	5,000 Volts
DC Grid Voltage	—400	—500	—600 Volts
Peak R-F Grid Voltage	1,000	1,150	1,300 Volts
DC Plate Current	1.0	1.2	1.2 Amperes
DC Grid Current	0.08	0.1	0.13 Amperes
Driving Power, Approx.	80	110	160 Watts
Power Output	2.5	3.1	4.0 Kilowatts

PLATE-MODULATED RADIO-FREQUENCY POWER AMPLIFIER—CLASS C TELEPHONY

(Carrier conditions per tube for use with a maximum modulation factor of 1.0)

Maximum Ratings

DC Plate Voltage	4,000 Volts
DC Grid Voltage	—1,500 Volts
DC Plate Current	1.0 Amperes
DC Grid Current	0.15 Amperes
Plate Input	4.0 Kilowatts
Plate Dissipation	1.6 Kilowatts

Typical Operation

DC Plate Voltage	3,500 Volts
DC Grid Voltage	—500 Volts
Peak R-F Grid Voltage	1,000 Volts
DC Plate Current	0.825 Amperes
DC Grid Current	0.110 Amperes
Driving Power, Approx.	100 Watts
Power Output	2 Kilowatts

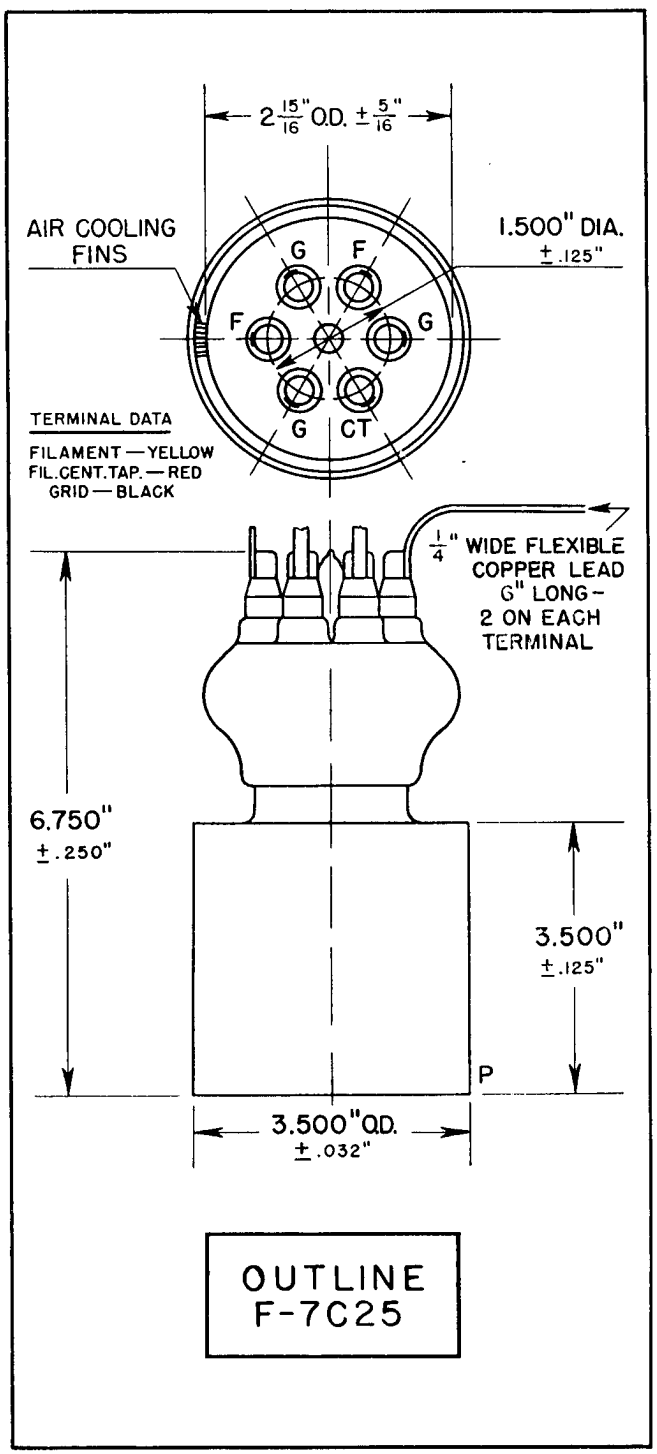

OUTLINE F-7C25

DIVISION OF T&T

Federal's name on a tube signifies the best in design, engineering, materials, components and craftsmanship.

FEDERAL POWER TRIODE
Type F-7C25
2.5 Kilowatts Plate Dissipation

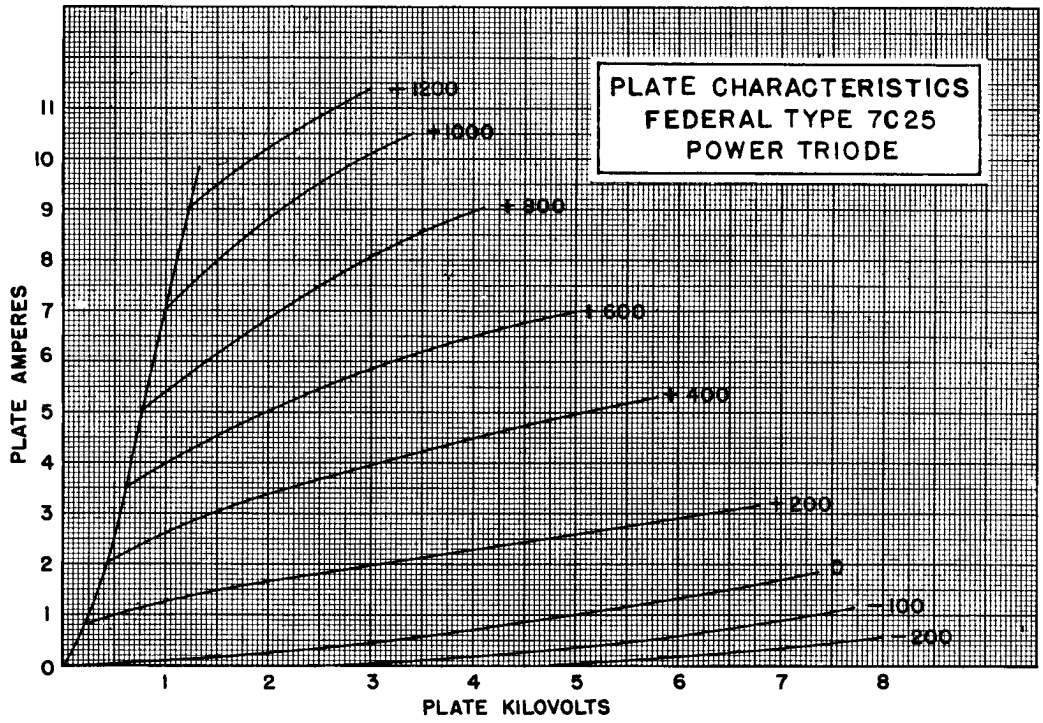

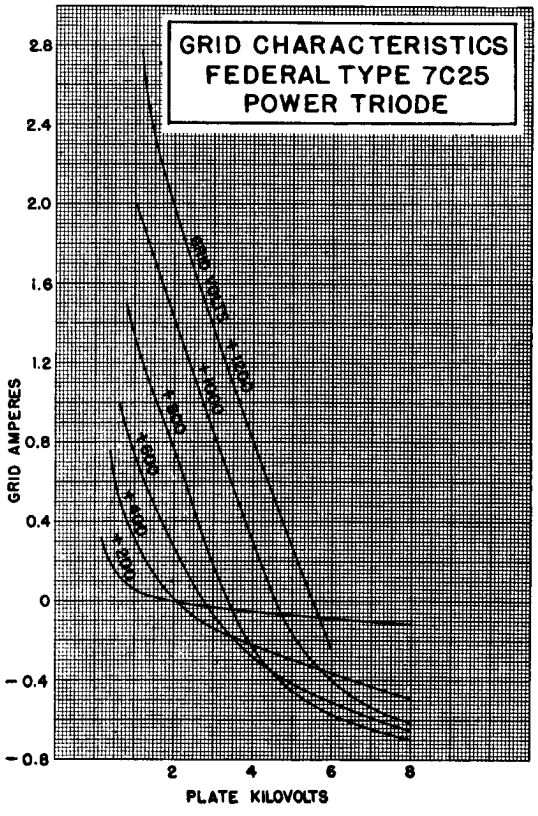

FEDERAL POWER TRIODE
Type F-7C25
2.5 Kilowatts Plate Dissipation

Federal tubes have always been known for their *plus values:* an extra rugged construction, a longer life of service.

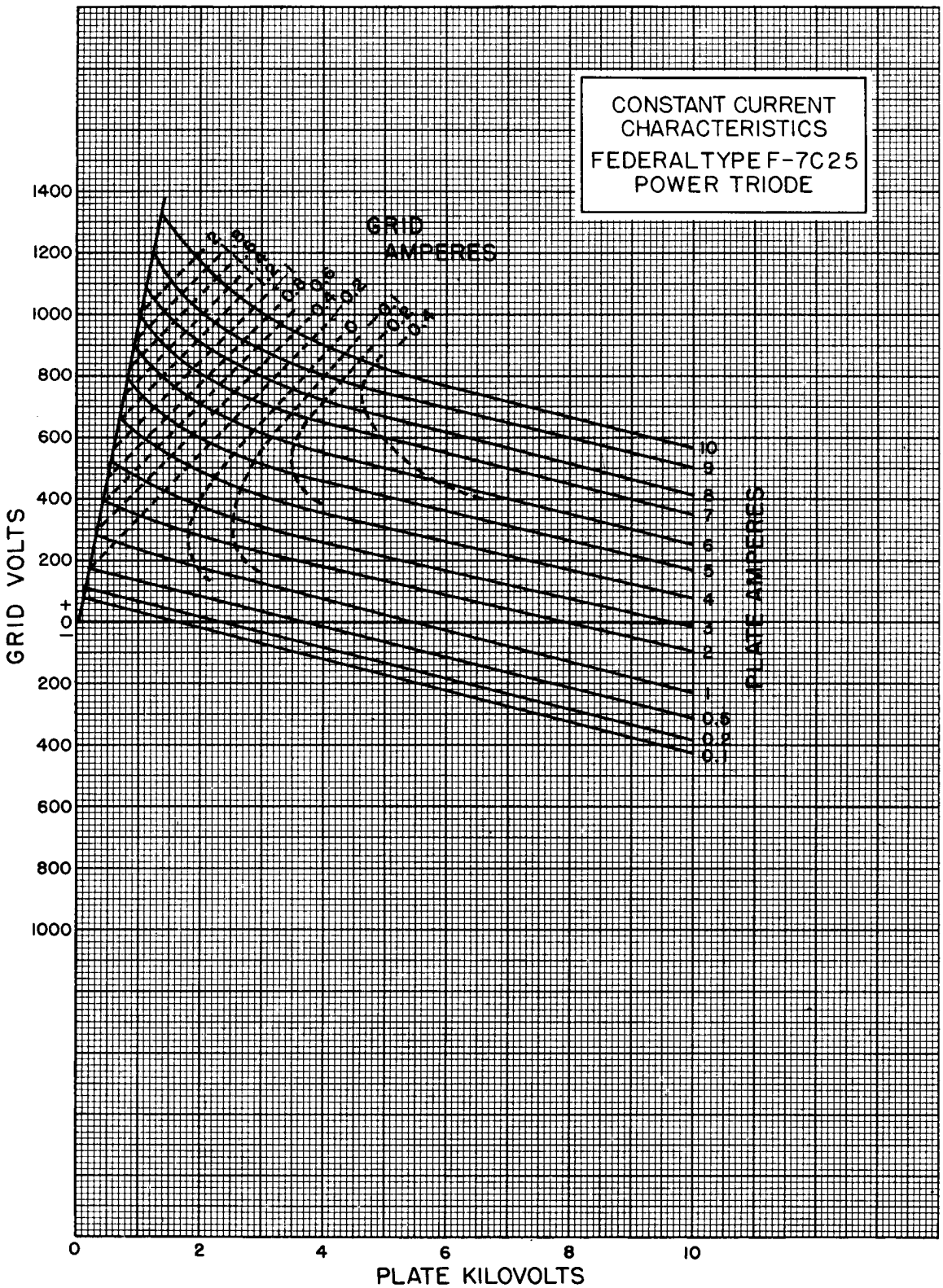

Form F-593 Printed in U.S.A.

DIVISION OF I T & T

Federal Telephone and Radio Company
100 Kingsland Road VACUUM TUBE DEPARTMENT Clifton, New Jersey

FEDERAL POWER TRIODE

Type F-9C28

40 Kilowatts Plate Dissipation

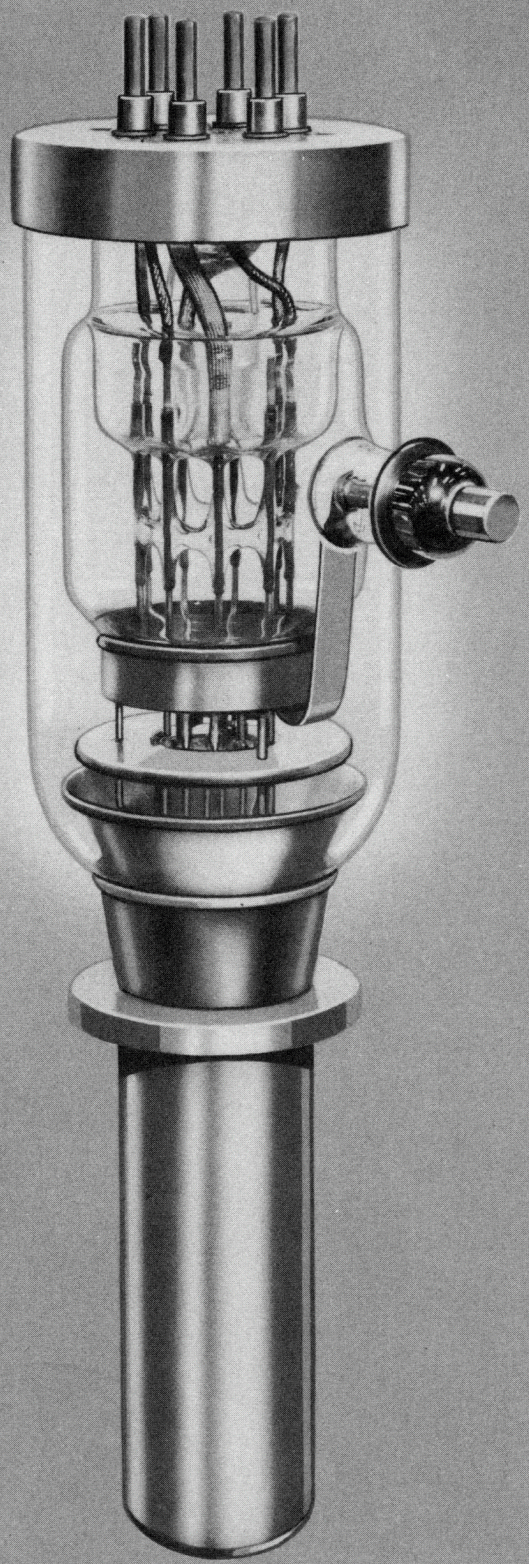

GENERAL DATA

DESCRIPTION:

Federal's F-9C28 is a three-electrode tube designed for use as a modulator in Class AB_1 circuits. The anode is water-cooled, capable of dissipating 40 kilowatts. The cathode is a thoriated tungsten multi-strand filament and may be operated on DC, 1ϕ, 3ϕ, or 6ϕ AC excitation. Maximum ratings apply for audio-frequency use only.

Electrical:

Filament Voltage§	15 Volts
Filament Current§	135 Amperes
Filament Starting Current§	200 Amps. max.
Filament Cold Resistance§	.019 Ohms
Peak Cathode Current	45 Amperes
Amplification Factor, $E_c = -1{,}600$ V; $I_b = 3.0$A	4.75

Interelectrode Capacitances

Grid-Plate	45 $\mu\mu$f
Grid-Filament	56 $\mu\mu$f
Plate-Filament	20 $\mu\mu$f

§Single phase excitation.

Mechanical:

Mounting Position—
Vertical, Anode Down

Type of Cooling—Water

Minimum Water Flow on Anode	20 GPM
Maximum Outgoing Water Temperature	70° C
Maximum Glass Temperature	150° C
Net Weight, approx.	11 ½ Pounds

Copyright 1949, Federal Telephone and Radio Corporation

FEDERAL POWER TRIODE

Type F-9C28

40 Kilowatts Plate Dissipation

The F-9C28 is Federal's thoriated tungsten filament low *mu* modulator tube for use in conjunction with the F-9C30.

Maximum Ratings and Typical Operating Conditions

AUDIO-FREQUENCY POWER AMPLIFIER AND MODULATOR—CLASS AB_1

Maximum Ratings, Absolute Values

DC Plate Voltage	15,000 Volts
Maximum Signal DC Plate Current†	10 Amperes
Maximum Signal Plate Input†	100 Kilowatts
Plate Dissipation†	40 Kilowatts

Typical Operation

(Unless otherwise specified, values are for two tubes)

DC Plate Voltage	10,000	12,000 Volts
DC Grid Voltage	—2,200	—2,600 Volts
Peak A-F Grid to Grid Voltage	4,380	5,160 Volts
Zero-Signal DC Plate Current	1.2	1.4 Amperes
Maximum Signal DC Plate Current	7.2	5.6 Amperes
Effective Load Resistance, Plate to Plate	2,600	4,500 Ohms
Maximum Signal Driving Power	0	0 Watts
Maximum Signal Power Output	39	39 Kilowatts

†Averaged over any audio frequency cycle at sine-wave form.

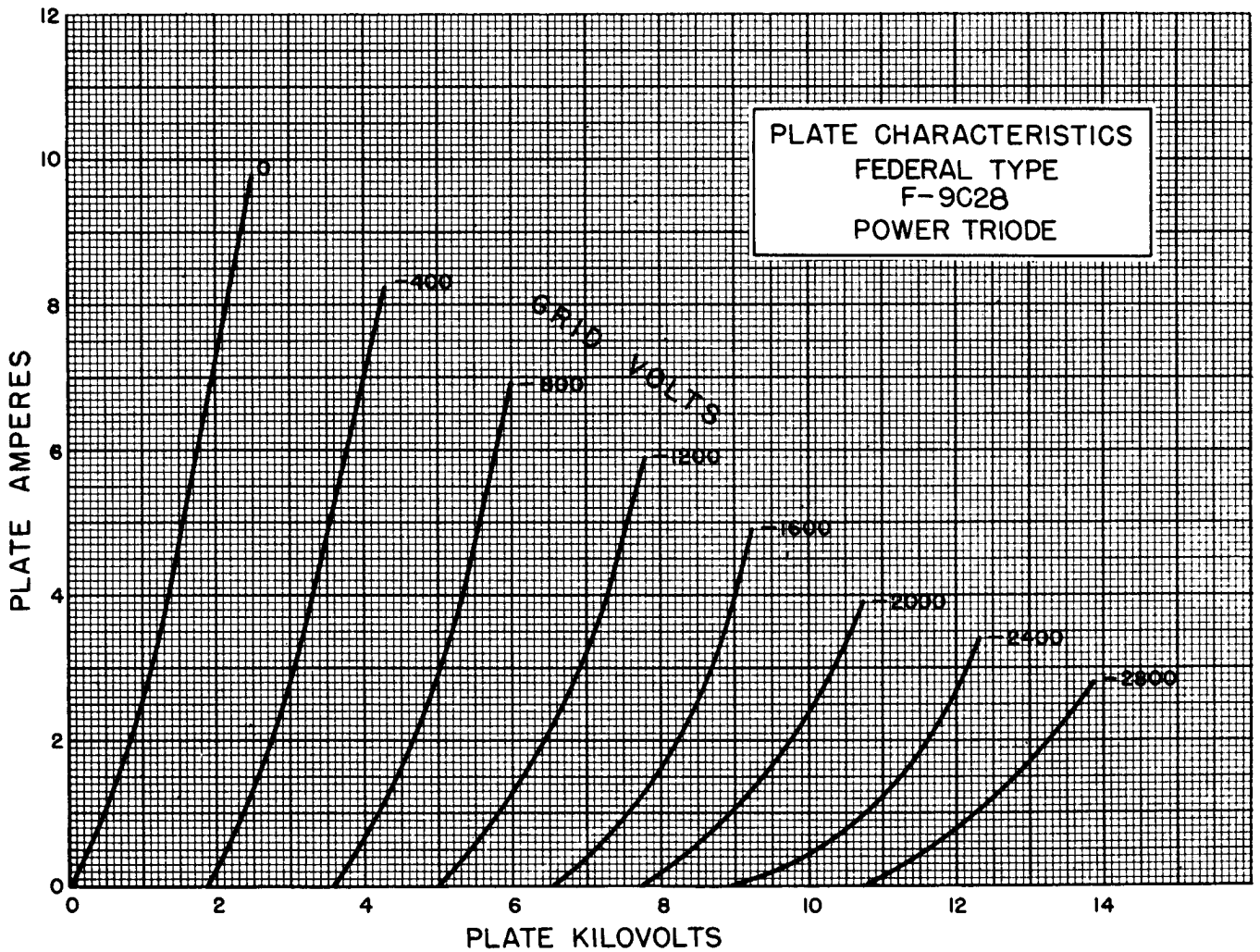

Up to 100 kilowatts of audio power is available . . . from *two* Federal F-9C28 tubes in a Class AB modulator.

FEDERAL POWER TRIODE
Type F-9C28
40 Kilowatts Plate Dissipation

FIG. 1

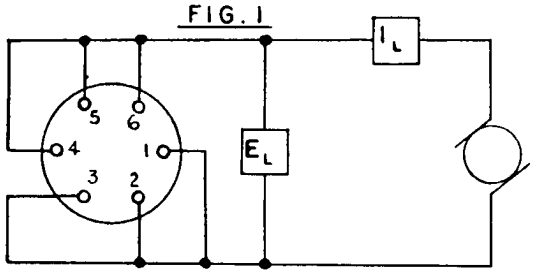

D.C. CONNECTION

E_L = 'X' VOLTS D.C.
I_L = 'Y' AMPS. D.C.

FIG. 2

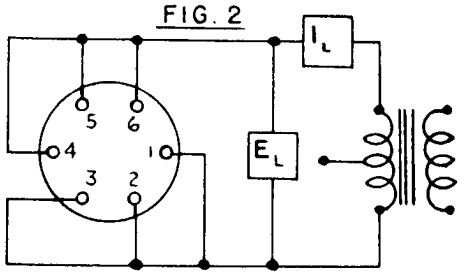

SINGLE-PHASE A.C. CONNECTION

E_L = 'X' VOLTS A.C.
I_L = 'Y' AMPS. A.C.

FIG. 3

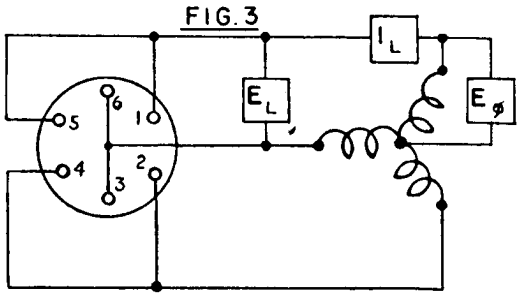

THREE-PHASE A.C. CONNECTION

E_L = 'X' VOLTS A.C.
I_L = 'Y' AMPS. A.C.
E_ϕ = 'Z' VOLTS. A.C.

FIG. 4

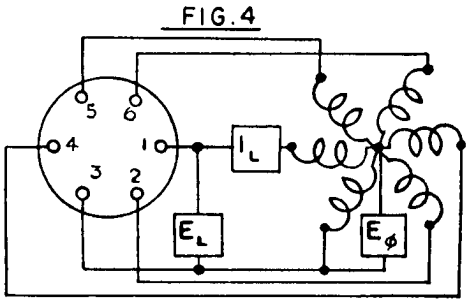

SIX-PHASE A.C. CONNECTION

E_L = 'X' VOLTS A.C.
I_L = 'Y' AMPS. A.C.
E_ϕ = 'Z' VOLTS. A.C.

FIG. 5

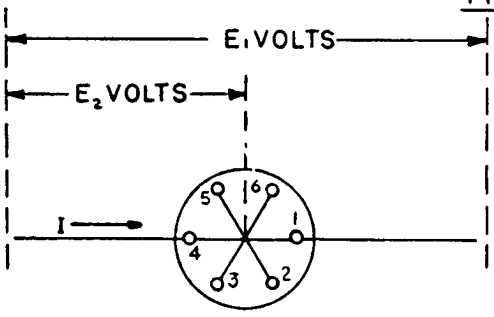

INTERNAL CONNECTION OF FILAMENTS

NUMBERS 1 TO 6 INCLUSIVE ON CONNECTIONS DENOTE BASE TERMINALS.

E_1 = 'U' VOLTS D.C. OR A.C. TERMINAL TO TERMINAL VOLTAGE.

E_2 = 'V' VOLTS D.C. OR A.C. VOLTAGE PER FILAMENT STRAND *i.e.* FROM TERMINAL TO COMMON TERMINAL CONNECTION.

I = 'W' AMPERES CURRENT PER FILAMENT TERMINAL.

FIG.	U	V	W	X	Y	Z
1				15	135	
2				15	135	
3				13	90	7.5
4				7.5	45	7.5
5	15	7.5	45			

MULTI-PHASE FILAMENT CONNECTIONS

An IT&T Associate

FEDERAL POWER TRIODE

Type F-9C28

40 Kilowatts Plate Dissipation

One of the *first* to manufacture power tubes, Federal's experience goes back to the earliest days of the industry.

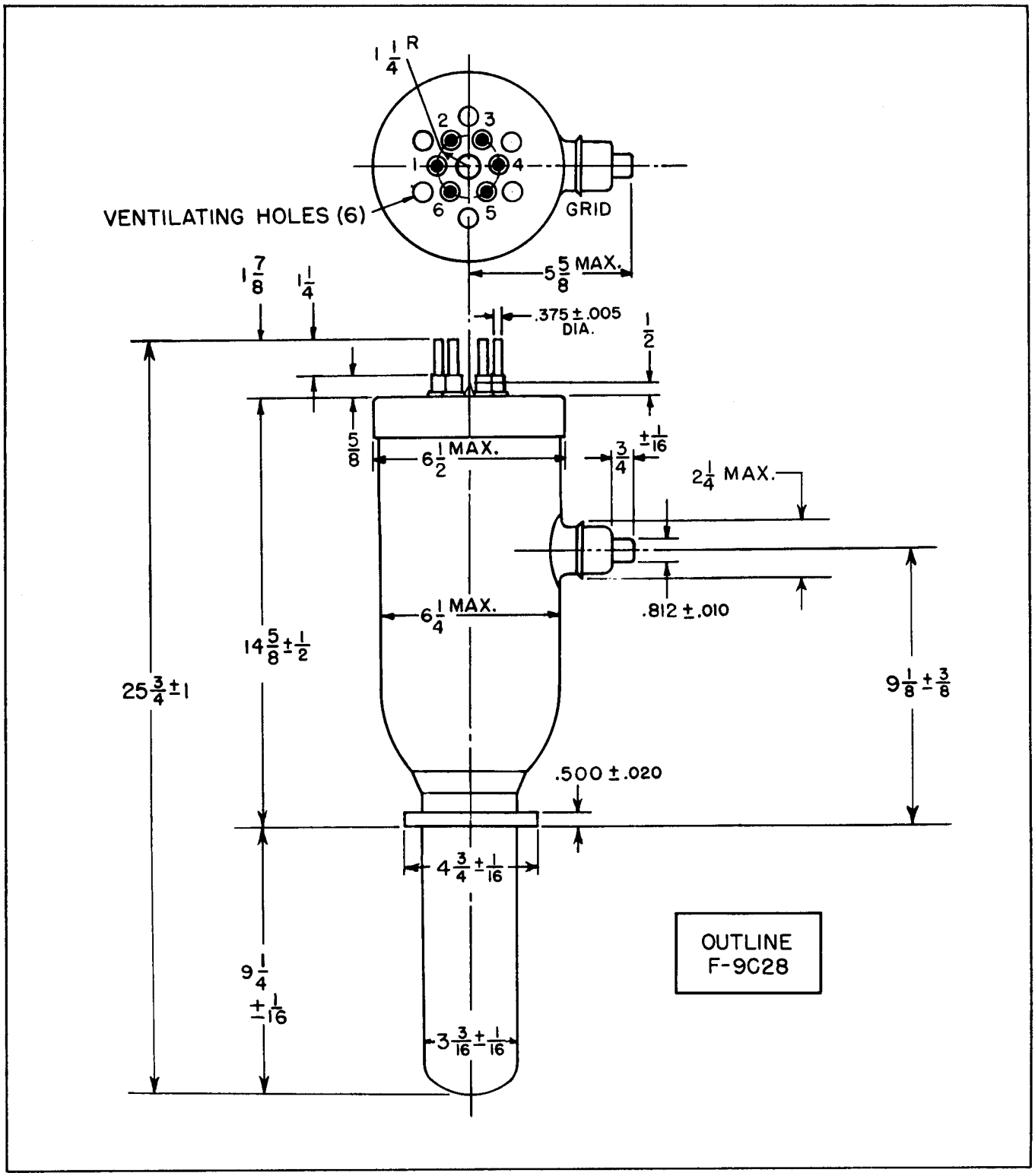

An IT&T Associate

Federal Telephone and Radio Corporation

100 Kingsland Road Clifton, New Jersey

FEDERAL POWER TRIODE
Type F-9C29
20 Kilowatts Plate Dissipation

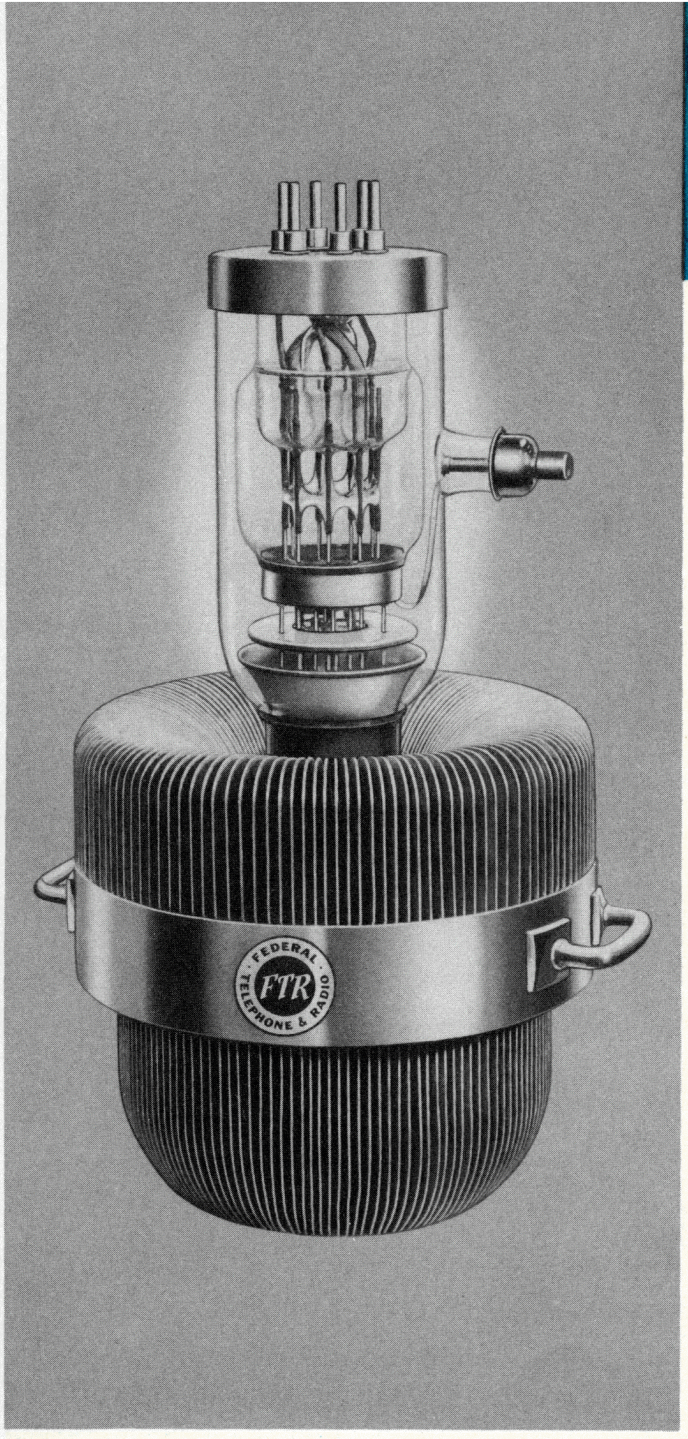

Federal's name on a tube means superior high vacuum processing, ratings commensurate with design and application, quality control of materials used in manufacture, and superior craftsmanship. *Federal always has made better tubes.*

GENERAL DATA

DESCRIPTION:

The F-9C29 by Federal is a three-electrode tube engineered for modulator use in Class AB_1 circuits. The anode, forced-air-cooled, is capable of dissipating 20 kilowatts. The cathode, a thoriated tungsten multistrand filament, may be operated on DC, 1Ø, 3Ø, or 6Ø AC excitation. Maximum ratings apply for audio-frequency use only.

Electrical:

Filament Voltage§	15 Volts
Filament Current§	135 Amperes
Filament Starting Current§	200 Amps. max.
Filament Cold Resistance§	.019 Ohms
Peak Cathode Current	45 Amperes
Amplification Factor, $E_c = -1600$ V; $I_b = 3.0$A	4.75
Interelectrode Capacitances	
Grid-Plate	50 $\mu\mu$f
Grid-Filament	56 $\mu\mu$f
Plate-Filament	20 $\mu\mu$f

§Single phase excitation.

Mechanical:

Mounting Position— Vertical, Anode Down			
Type of Cooling—Forced Air			
Maximum Incoming Air Temperature			45° C
Required Air Flow on Anode			
Plate Dissipation (Kilowatts)	20	16	12
Air Flow—Cubic Feet per Min.	2,100	1,600	1,200
Pressure—Inches Water	2.15	1.24	0.70
Maximum Glass Temperature			150° C
Net Weight, approximate			202 Lbs.

Copyright 1949, Federal Telephone and Radio Corporation

FEDERAL POWER TRIODE
Type F-9C29
20 Kilowatts Plate Dissipation

Federal's F-9C29, air-cooled version of the F-9C28, is designed for use as a modulator in conjunction with the F-9C31.

Maximum Ratings and Typical Operating Conditions

AUDIO-FREQUENCY POWER AMPLIFIER AND MODULATOR—CLASS AB_1

Maximum Ratings, Absolute Values

DC Plate Voltage	15,000 Volts
Maximum Signal DC Plate Current†	10 Amperes
Maximum Signal Plate Input†	50 Kilowatts
Plate Dissipation†	20 Kilowatts

Typical Operation

(Unless otherwise specified, values are for two tubes)

DC Plate Voltage	10,000	12,000 Volts
DC Grid Voltage	—2,200	—2,600 Volts
Peak A-F Grid to Grid Voltage	4,380	5,160 Volts
Zero-Signal DC Plate Current	1.2	1.4 Amperes
Maximum Signal DC Plate Current	7.2	5.6 Amperes
Effective Load Resistance, Plate to Plate	2,600	4,500 Ohms
Maximum Signal Driving Power	0	0 Watts
Maximum Signal Power Output	39	39 Kilowatts

†Averaged over any audio-frequency cycle of sine-wave form.

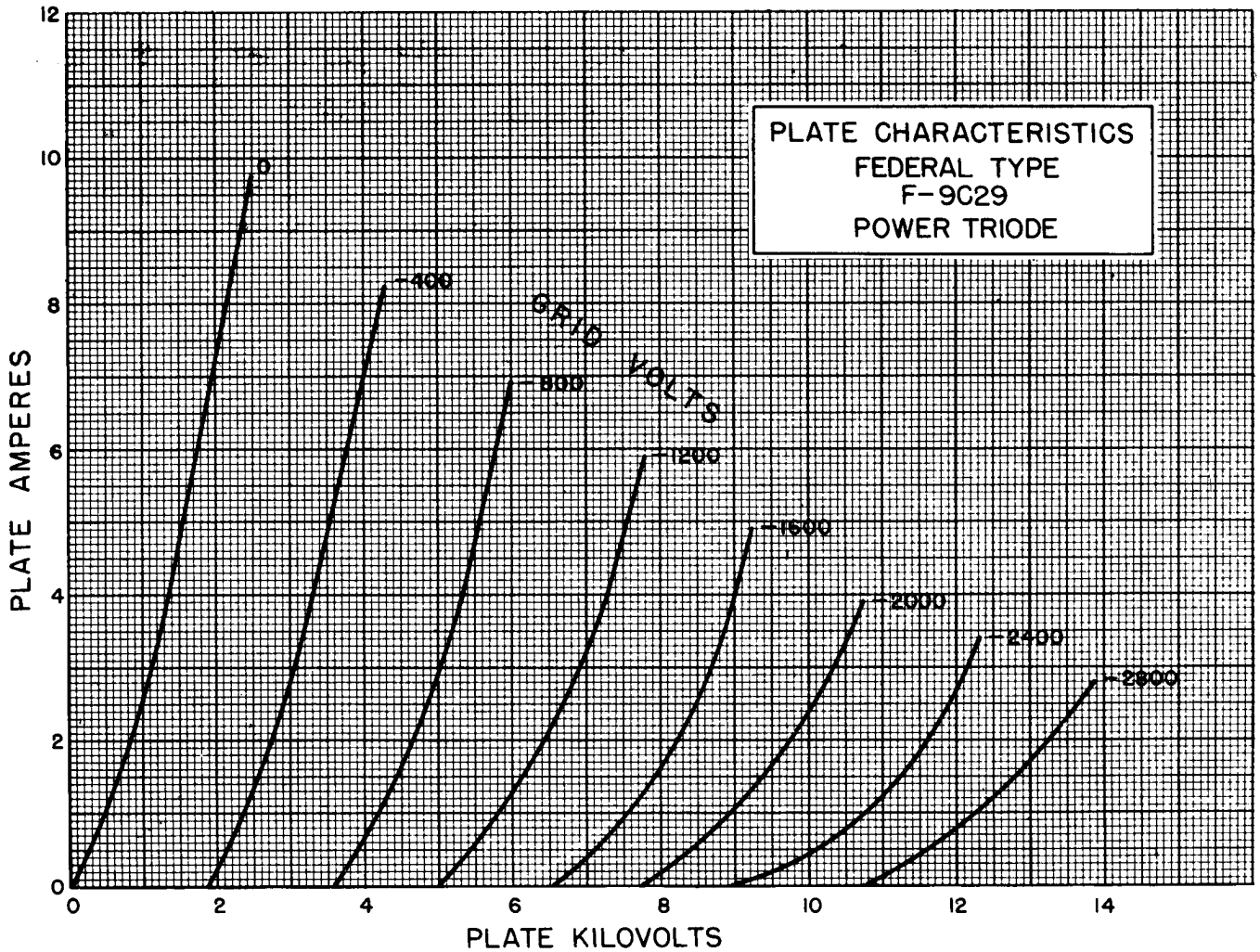

The heavy wall anode of Federal's F-9C29 means a more uniform heat distribution, a more efficient performance.

FEDERAL POWER TRIODE
Type F-9C29
20 Kilowatts Plate Dissipation

FIG. 1

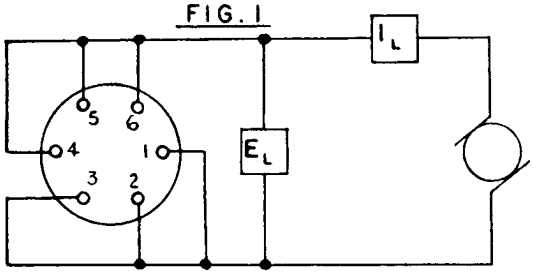

D.C. CONNECTION

E_L = 'X' VOLTS D.C.
I_L = 'Y' AMPS. D.C.

FIG. 2

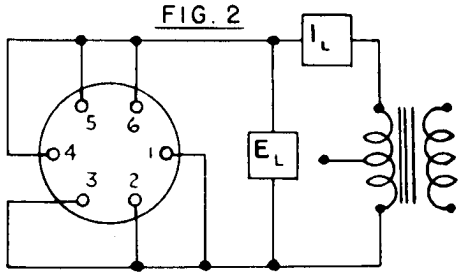

SINGLE-PHASE A.C. CONNECTION

E_L = 'X' VOLTS A.C.
I_L = 'Y' AMPS. A.C.

FIG. 3

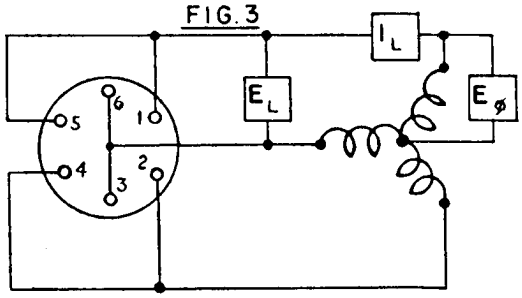

THREE-PHASE A.C. CONNECTION

E_L = 'X' VOLTS A.C.
I_L = 'Y' AMPS. A.C.
E_ϕ = 'Z' VOLTS. A.C.

FIG. 4

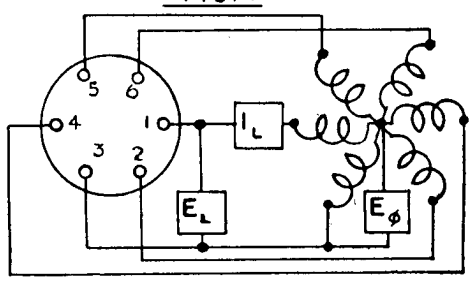

SIX-PHASE A.C. CONNECTION

E_L = 'X' VOLTS A.C.
I_L = 'Y' AMPS. A.C.
E_ϕ = 'Z' VOLTS. A.C.

FIG. 5

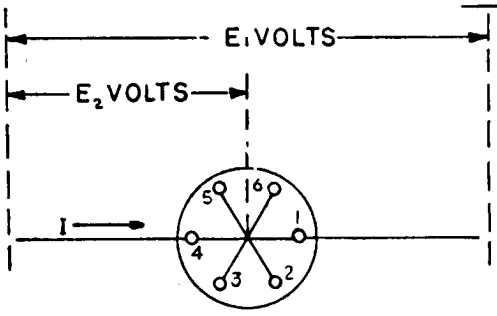

INTERNAL CONNECTION OF FILAMENTS

NUMBERS 1 TO 6 INCLUSIVE ON CONNECTIONS DENOTE BASE TERMINALS.

E_1 = 'U' VOLTS D.C. OR A.C. TERMINAL TO TERMINAL VOLTAGE.

E_2 = 'V' VOLTS D.C. OR A.C. VOLTAGE PER FILAMENT STRAND *i.e.* FROM TERMINAL TO COMMON TERMINAL CONNECTION.

I = 'W' AMPERES CURRENT PER FILAMENT TERMINAL.

FIG.	U	V	W	X	Y	Z
1				15	135	
2				15	135	
3				13	90	7.5
4				7.5	45	7.5
5	15	7.5	45			

MULTI-PHASE FILAMENT CONNECTIONS

AN IT&T ASSOCIATE

FEDERAL POWER TRIODE
Type F-9C29
20 Kilowatts Plate Dissipation

Federal always has made tubes of the very finest quality.

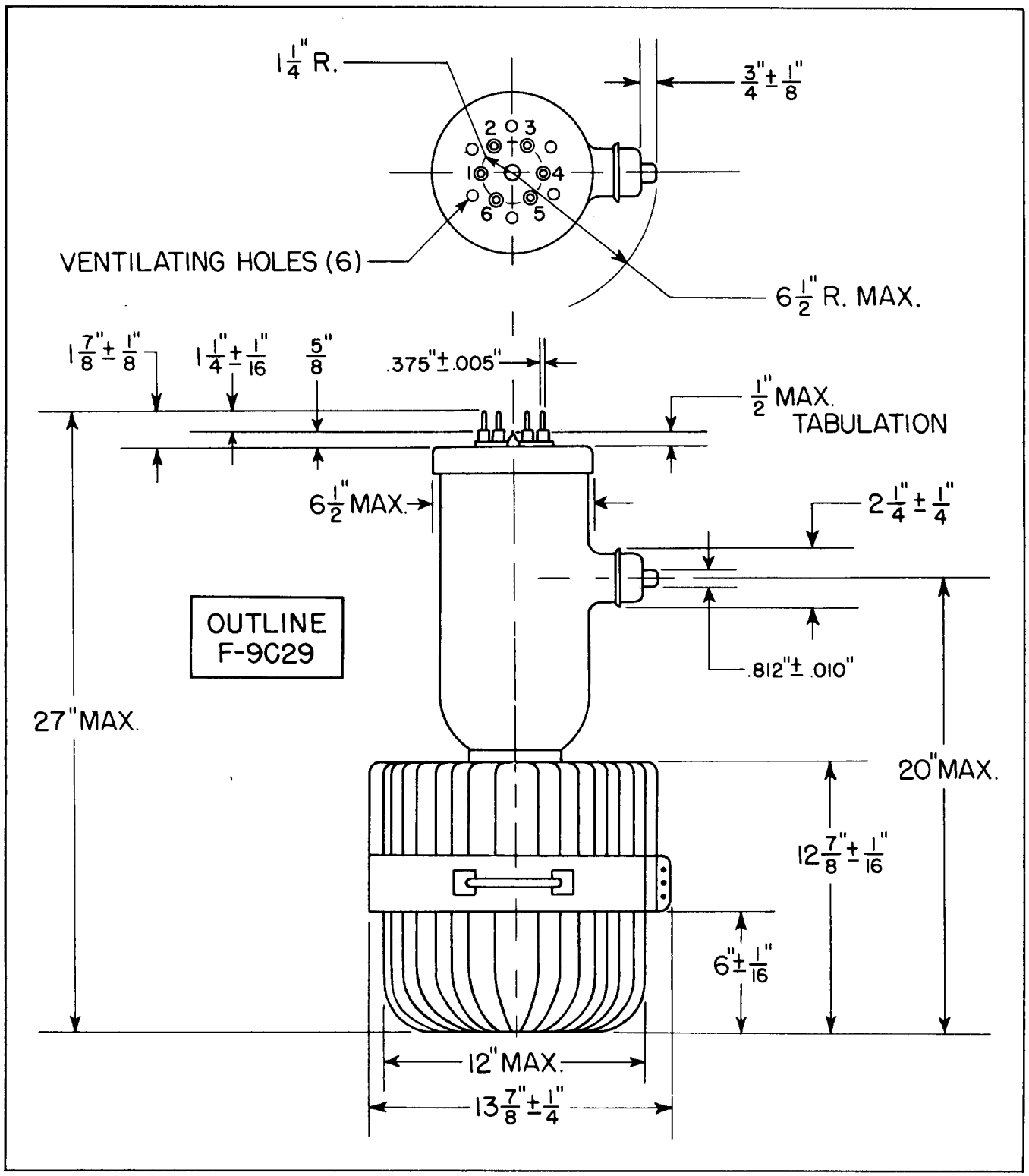

Form FJ-430. Printed in U. S. A.

An IT&T Associate

Federal Telephone and Radio Corporation

100 Kingsland Road Clifton, New Jersey

FEDERAL POWER TRIODE
Type F-9C30
40 Kilowatts Plate Dissipation

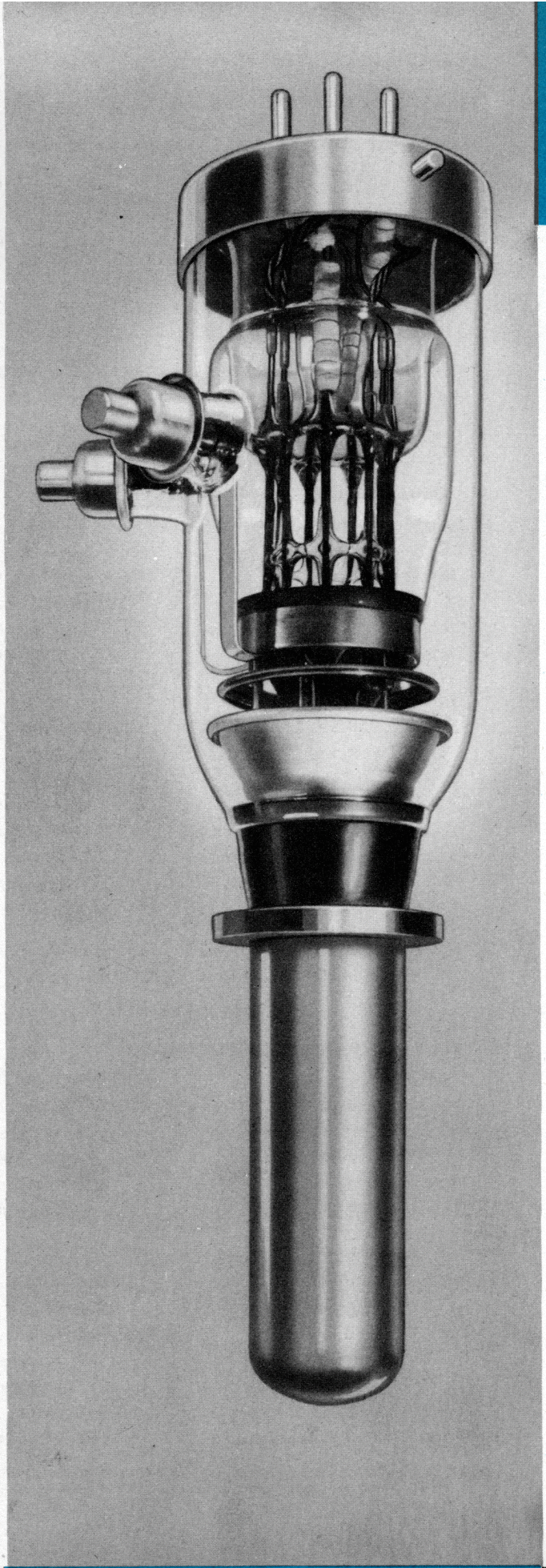

GENERAL DATA

DESCRIPTION:

The F-9C30 is a three-electrode tube, Federal-designed, for use as a radio-frequency amplifier, oscillator, or Class B modulator. The anode, water-cooled, is capable of dissipating 40 kilowatts. The cathode is a thoriated tungsten multi-strand filament, and may be operated on direct current, single-phase, three-phase, or six-phase alternating current excitation. Maximum ratings apply up to 20 megacycles.

Electrical:

Filament Voltage§	15 Volts
Filament Current§	135 Amperes
Filament Starting Current§	200 Amperes max.
Filament Cold Resistance§	.019 Ohms
Peak Cathode Current	45 Amperes
Amplification Factor, at $E_c = -200V$ $I_b = 1.6A$	40.5
Interelectrode Capacitances	
Grid-Plate	35 $\mu\mu f$
Grid-Filament	46 $\mu\mu f$
Plate-Filament	5.6 $\mu\mu f$

§Single phase excitation.

Mechanical:

Mounting Position— Vertical, anode down	
Type of Cooling—Water	
Minimum Water Flow on Anode	15 GPM.
Maximum Outgoing Water Temperature	70° C
Maximum Glass Temperature	150° C
Net Weight, approximate	11½ Pounds

Copyright 1949, Federal Telephone and Radio Corporation

FEDERAL POWER TRIODE
Type F-9C30
40 Kilowatts Plate Dissipation

Federal was *the first in the industry* to develop, engineer and produce thoriated tungsten filaments in high-power tubes.

Maximum Ratings and Typical Operating Conditions

AUDIO-FREQUENCY POWER AMPLIFIER AND MODULATOR—CLASS B

Maximum Ratings, Absolute Values

DC Plate Voltage	15,000 Volts
Maximum Signal DC Plate Current†	5 Amperes
Maximum Signal Plate Input†	50 Kilowatts
Plate Dissipation†	30 Kilowatts

Typical Operation

(Unless otherwise specified, values are for two tubes)

DC Plate Voltage	10,000 Volts
DC Grid Voltage	—200 Volts
Peak A-F Grid-to-Grid Voltage	1,600 Volts
Zero Signal DC Plate Current	0.5 Amperes
Maximum Signal DC Plate Current	6.0 Amperes
Effective Load Resistance, Plate to Plate	3,750 Ohms
Maximum Signal Driving Power, approximate	360 Watts
Maximum Signal Power Output, approximate	39 Kilowatts

†Averaged over any audio frequency cycle of sine-wave form.

RADIO-FREQUENCY POWER AMPLIFIER—CLASS B

(Carrier conditions per tube for use with a maximum modulation factor of 1.0)

Maximum Ratings, Absolute Values

DC Plate Voltage	15,000 Volts
DC Plate Current	4 Amperes
Plate Input	60 Kilowatts
Plate Dissipation	40 Kilowatts

Typical Operation

DC Plate Voltage	15,000 Volts
DC Grid Voltage	—200 Volts
Peak R-F Grid Voltage	470 Volts
DC Plate Current	2.7 Amperes
DC Grid Current, approximate	0.0 Amperes
Driving Power, approximate‡	480 Watts
Power Output, approximate	13.7 Kilowatts

‡At crest of audio-frequency cycle with modulation factor of 1.0.

PLATE-MODULATED RADIO-FREQUENCY POWER AMPLIFIER—CLASS C TELEPHONY

(Carrier conditions per tube for use with a maximum modulation factor of 1.0)

Maximum Ratings, Absolute Values

DC Plate Voltage	12,000 Volts
DC Grid Voltage	—3,000 Volts
DC Plate Current	4.5 Amperes
DC Grid Current	1 Ampere
Plate Input	54 Kilowatts
Plate Dissipation	30 Kilowatts

Typical Operation

DC Plate Voltage	12,000 Volts
DC Grid Voltage	—750 Volts
Peak R-F Grid Voltage	1,510 Volts
DC Plate Current	3.1 Amperes
DC Grid Current, approximate	0.48 Amperes
Driving Power, approximate	700 Watts
Power Output, approximate	27.2 Kilowatts

RADIO-FREQUENCY POWER AMPLIFIER AND OSCILLATOR—CLASS C TELEGRAPHY

(Key-down conditions per tube without amplitude modulation)¶

Maximum Ratings, Absolute Values

DC Plate Voltage	15,000 Volts
DC Grid Voltage	—3,000 Volts
DC Plate Current	8 Amperes
DC Grid Current	1 Ampere
Plate Input	120 Kilowatts
Plate Dissipation	40 Kilowatts

Typical Operation

DC Plate Voltage	15,000 Volts
DC Grid Voltage	—900 Volts
Peak R-F Grid Voltage	1,940 Volts
DC Plate Current	4.7 Amperes
DC Grid Current, approximate	0.75 Amperes
Driving Power, approximate	1,350 Watts
Power Output, approximate	52 Kilowatts

¶Modulation essentially negative may be used if the positive peak of the envelope does not exceed 115 per cent of carrier conditions.

An IT&T Associate

FEDERAL POWER TRIODE
Type F-9C30
40 Kilowatts Plate Dissipation

Typical triodes using Federal thoriated tungsten filaments are F-9C30 and F-9C31 power amplifiers . . . F-9C28 and F-9C29 modulators.

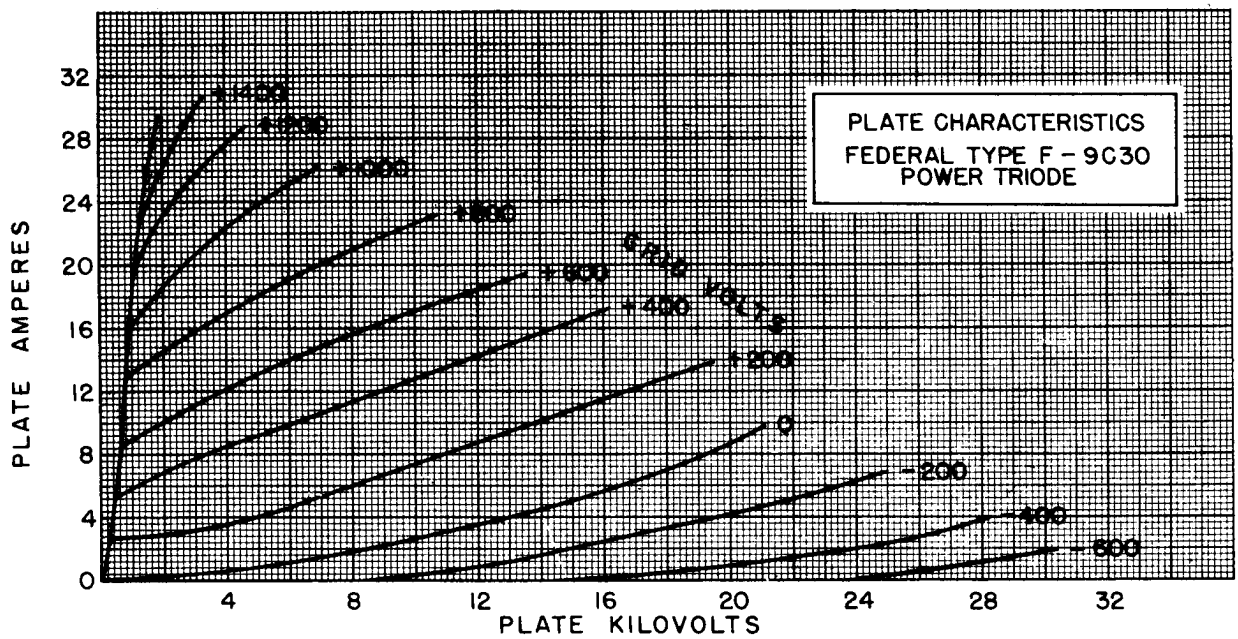

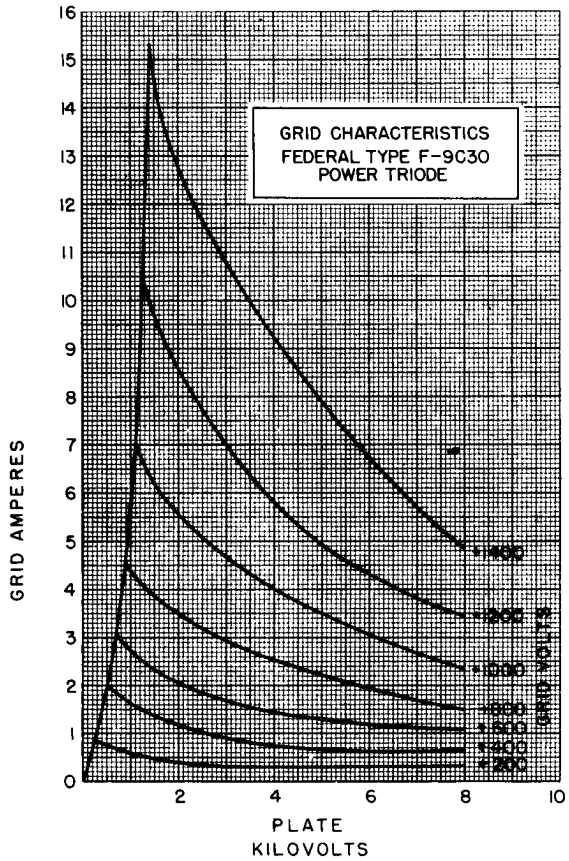

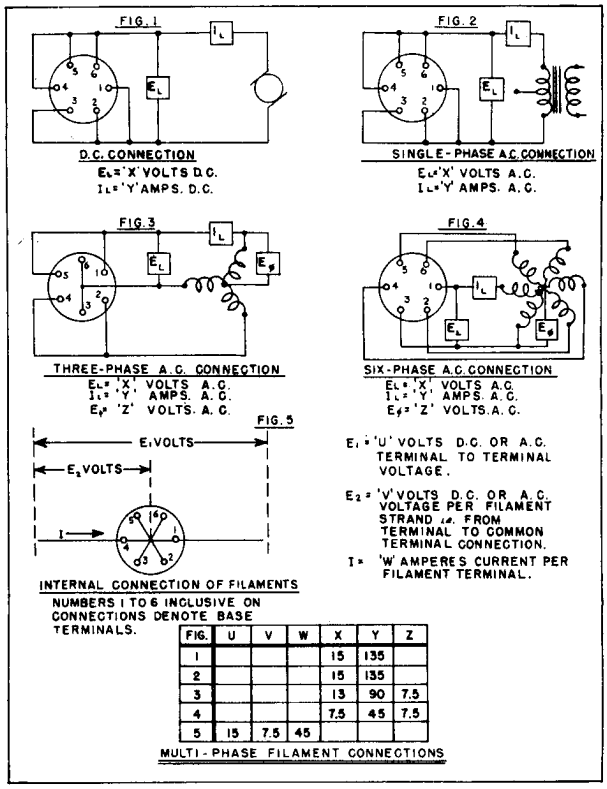

FIG.	U	V	W	X	Y	Z
1				15	135	
2				15	135	
3				13	90	7.5
4				7.5	45	7.5
5	15	7.5	45			

MULTI-PHASE FILAMENT CONNECTIONS

AN IT&T ASSOCIATE

FEDERAL POWER TRIODE
Type F-9C30
40 Kilowatts Plate Dissipation

Federal's newest triodes for 50 KW transmitters . . . F-9C30 and F-9C28 . . . give greater electron emission with less filament power, lower hum level, and longer life.

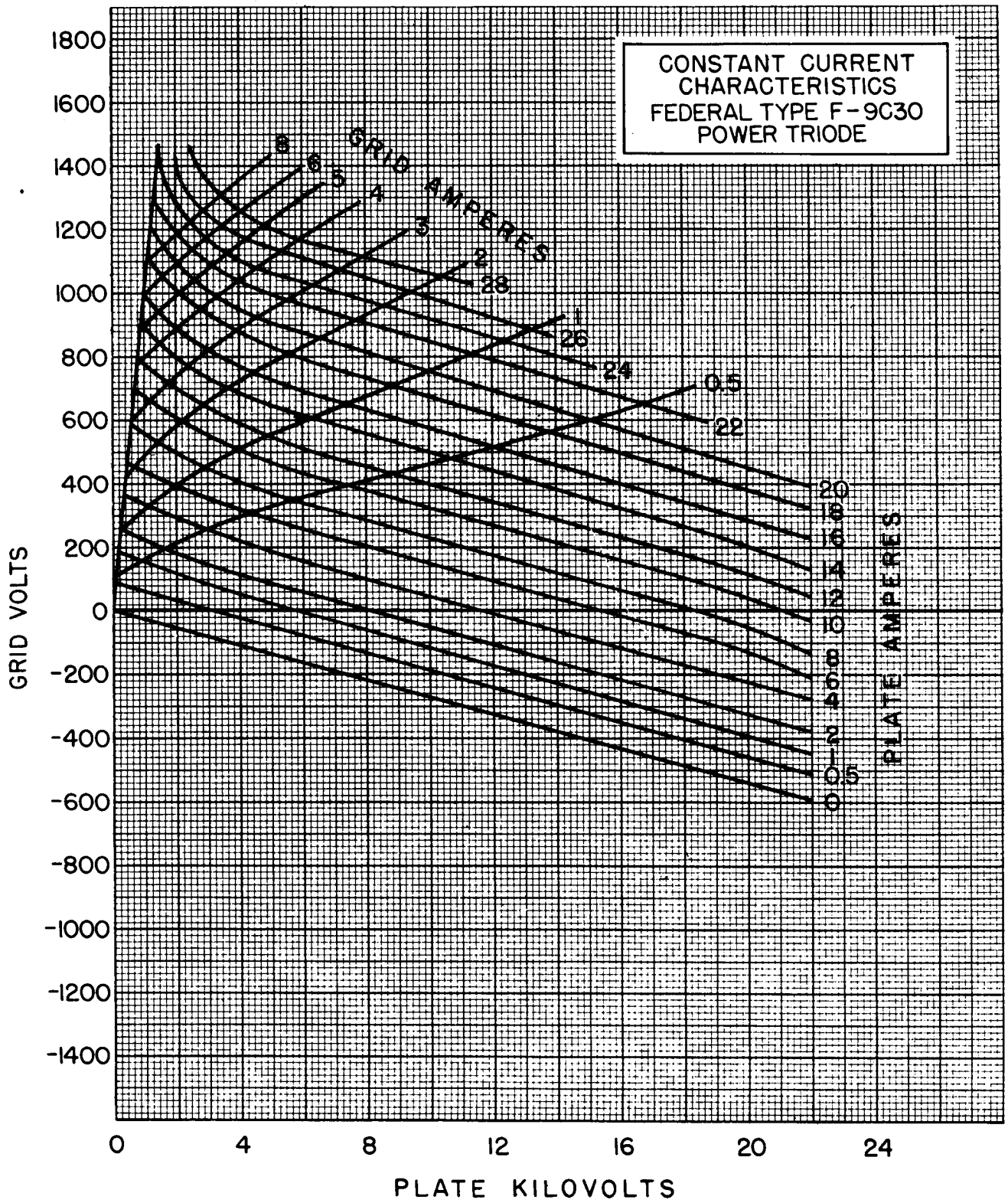

An IT&T Associate

Federal's *introduction* of high-power tubes with thoriated tungsten filaments marked an epoch of new economies in filament power, and operating efficiencies.

FEDERAL POWER TRIODE
Type F-9C30
40 Kilowatts Plate Dissipation

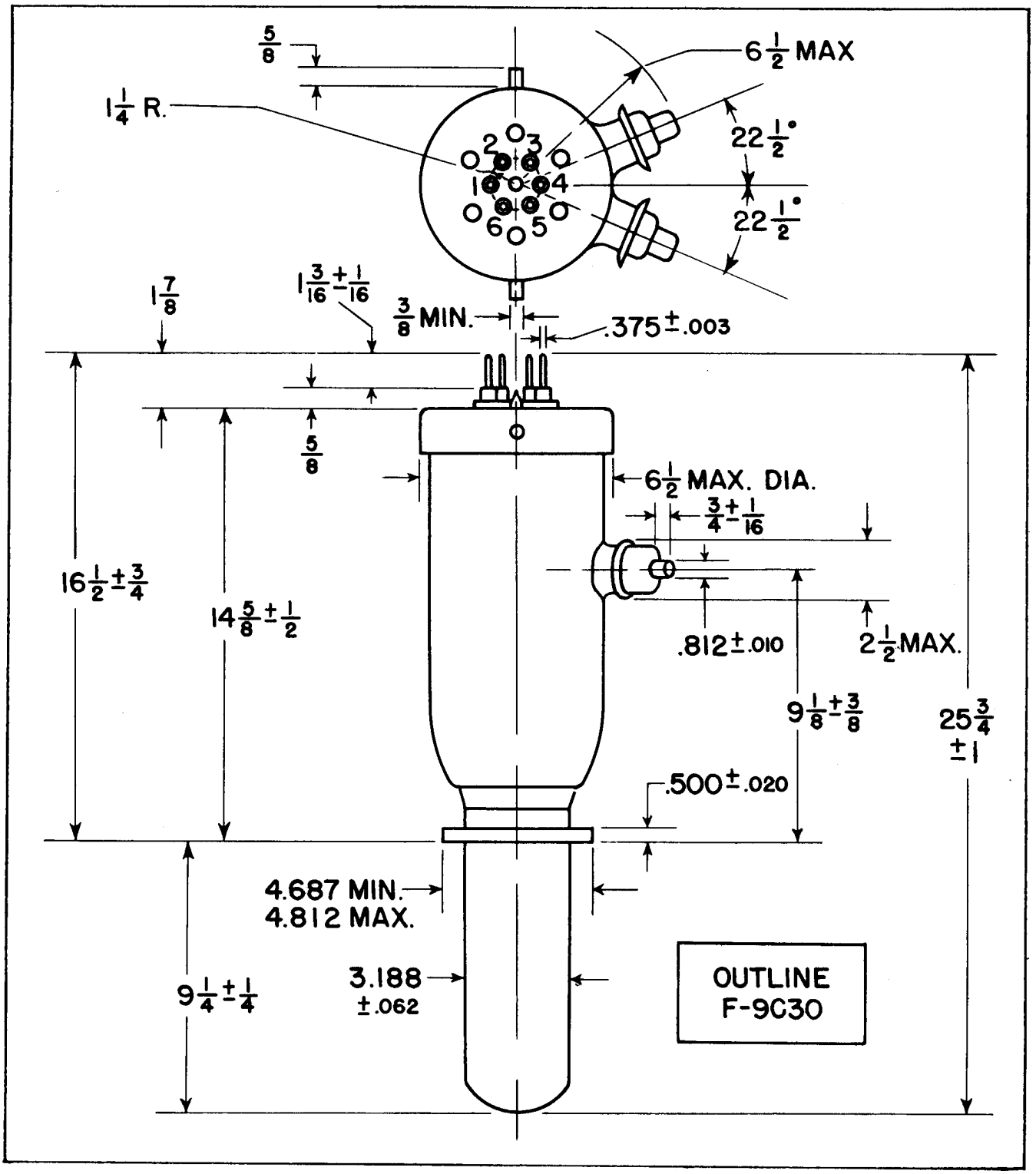

Federal Telephone and Radio Corporation
100 Kingsland Road Clifton, New Jersey

When you are developing projects wherein tubes are components, consult Federal's engineers, let them advise and assist you . . . no obligation is incurred.

Over the years, hundreds of manufacturers, designers, technicians have taken advantage of this Federal service . . . with benefit both to their products and services.

Form FJ-285 Printed in U. S. A.

FEDERAL POWER TRIODE
Type F-9C31
20 Kilowatts Plate Dissipation

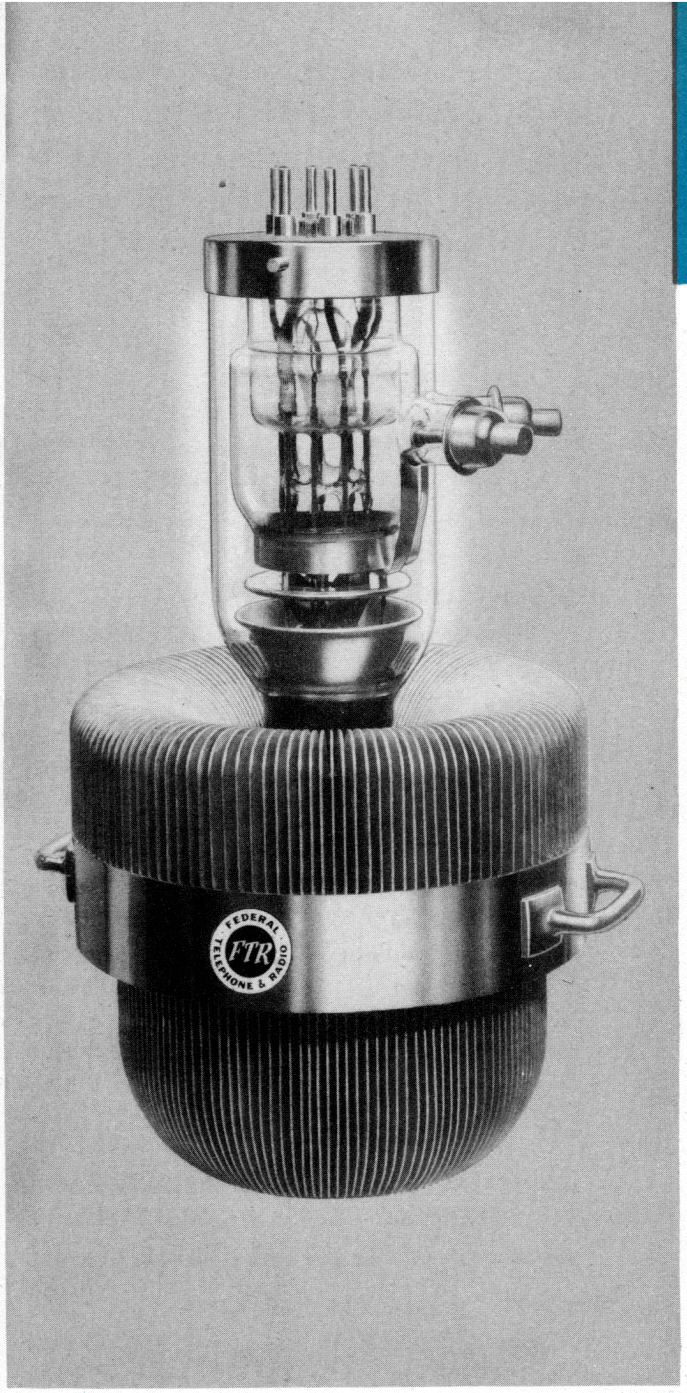

GENERAL DATA

DESCRIPTION:

Federal's F-9C31 is a three-electrode tube engineered to serve as a radio-frequency amplifier, oscillator, or as a Class B modulator. The forced-air-cooled anode is capable of dissipating 20 kilowatts. The cathode is a thoriated tungsten multi-strand filament and may be operated on direct current, single-phase, three-phase, or six-phase alternating current excitation. Maximum ratings apply up to 20 megacycles.

Electrical:

Filament Voltage§	15 Volts
Filament Current§	135 Amperes
Filament Starting Current§	200 Amperes max.
Filament Cold Resistance§	.019 Ohms
Peak Cathode Current	45 Amperes
Amplification Factor, $E_c = -200V$ $I_b = 1.6A$	40.5
Interelectrode Capacitances	
Grid-Plate	40 $\mu\mu f$
Grid-Filament	46 $\mu\mu f$
Plate-Filament	5.6 $\mu\mu f$

§Single phase excitation.

Mechanical:

Mounting Position— Vertical, Anode Down			
Type of Cooling—Forced Air			
Maximum Incoming Air Temperature			45° C
Required Air Flow on Anode			
Plate Dissipation— Kilowatts	20	16	12
Minimum Air Flow —Cubic Feet per Minute	2,100	1,600	1,200
Pressure—Inches Water	2.15	1.24	0.70
Maximum Glass Temperature			150° C
Net Weight, approximate			202 Lbs.

Federal's Type F-9C31 maintains lower operating temperatures because of its thoriated tungsten filaments. The components keep cooler, last longer.

Copyright 1949, Federal Telephone and Radio Corporation

Federal Telephone and Radio Corporation

FEDERAL POWER TRIODE
Type F-9C31
20 Kilowatts Plate Dissipation

The low filament temperature in F-9C31 permits the designer's use of grid materials which reduce grid emission. It's *in the design* where efficient performance gets its start.

Maximum Ratings and Typical Operating Conditions

AUDIO-FREQUENCY POWER AMPLIFIER AND MODULATOR—CLASS B

Maximum Ratings, Absolute Values

DC Plate Voltage	15,000 Volts
Maximum Signal DC Plate Current†	5 Amperes
Maximum Signal Plate Input†	50 Kilowatts
Plate Dissipation†	20 Kilowatts

Typical Operation

(Unless otherwise specified, values are for two tubes)

DC Plate Voltage	10,000 Volts
DC Grid Voltage	—200 Volts
Peak A-F Grid-to-Grid Voltage	1,600 Volts
Zero Signal DC Plate Current	0.5 Amperes
Maximum Signal DC Plate Current	6.0 Amperes
Effective Load Resistance, Plate to Plate	3,750 Ohms
Maximum Signal Driving Power, approximate	360 Watts
Maximum Signal Power Output, approximate	39 Kilowatts

†Averaged over any audio frequency cycle of sine-wave form.

RADIO-FREQUENCY POWER AMPLIFIER—CLASS B

(Carrier conditions per tube for use with a maximum modulation factor of 1.0)

Maximum Ratings, Absolute Values

DC Plate Voltage	15,000 Volts
DC Plate Current	4 Amperes
Plate Input	30 Kilowatts
Plate Dissipation	20 Kilowatts

Typical Operation

DC Plate Voltage	14,000 Volts
DC Grid Voltage	—200 Volts
Peak R-F Grid Voltage	450 Volts
DC Plate Current	2.1 Amperes
DC Grid Current, approximate	0.00 Amperes
Driving Power, approximate‡	400 Watts
Power Output, approximate	10 Kilowatts

‡At crest of audio-frequency cycle with modulation factor of 1.0.

PLATE-MODULATED RADIO-FREQUENCY POWER AMPLIFIER—CLASS C TELEPHONY

(Carrier conditions per tube for use with a maximum modulation factor of 1.0)

Maximum Ratings, Absolute Values

DC Plate Voltage	12,000 Volts
DC Grid Voltage	—3,000 Volts
DC Plate Current	4.5 Amperes
DC Grid Current	1.0 Amperes
Plate Input	54 Kilowatts
Plate Dissipation	15 Kilowatts

Typical Operation

DC Plate Voltage	12,000 Volts
DC Grid Voltage	—750 Volts
Peak R-F Grid Voltage	1,510 Volts
DC Plate Current	3.08 Amperes
DC Grid Current, approximate	0.48 Amperes
Driving Power, approximate	700 Watts
Power Output, approximate	27.2 Kilowatts

RADIO-FREQUENCY POWER AMPLIFIER AND OSCILLATOR—CLASS C TELEGRAPHY

(Key-down conditions per tube without amplitude modulation)¶

Maximum Ratings, Absolute Values

DC Plate Voltage	15,000 Volts
DC Grid Voltage	—3,000 Volts
DC Plate Current	8 Ampeers
DC Grid Current	1 Ampere
Plate Input	100 Kilowatts
Plate Dissipation	20 Kilowatts

Typical Operation

DC Plate Voltage	15,000 Volts
DC Grid Voltage	—900 Volts
Peak R-F Grid Voltage	1,940 Amperes
DC Plate Current	4.7 Amperes
DC Grid Current, approximate	0.75 Amperes
Driving Power, approximate	1,350 Watts
Power Output, approximate	52 Kilowatts

¶Modulation essentially negative may be used if the positive peak of the envelope does not exceed 115 per cent of carrier conditions.

AN IT&T ASSOCIATE

Federal's F-9C31 shows the way to new economies. Consuming less filament power, it achieves appreciable savings in operating costs.

FEDERAL POWER TRIODE
Type F-9C31
20 Kilowatts Plate Dissipation

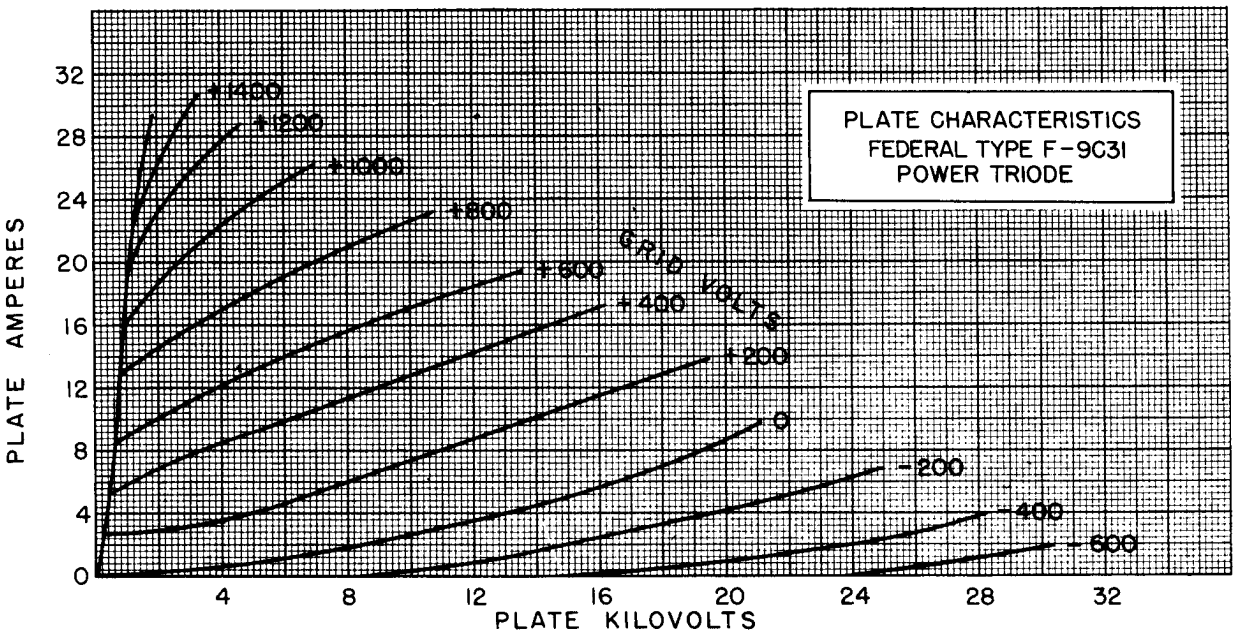

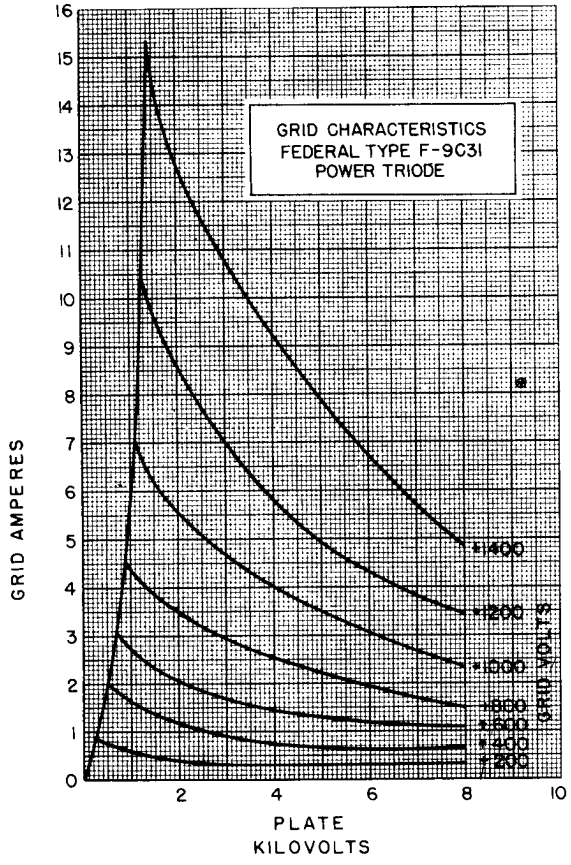

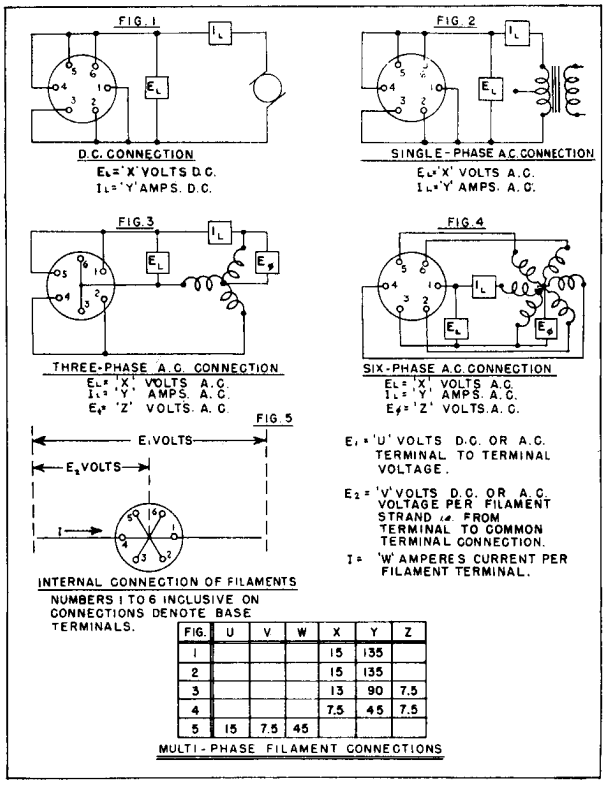

FIG.	U	V	W	X	Y	Z
1				15	135	
2				15	135	
3				13	90	7.5
4				7.5	45	7.5
5	15	7.5	45			

MULTI-PHASE FILAMENT CONNECTIONS

FEDERAL POWER TRIODE
Type F-9C31
20 Kilowatts Plate Dissipation

Federal's F-9C31 is designed for specific use in 50 kilowatt AM broadcast and short wave transmitters . . . custom-made for customer satisfaction.

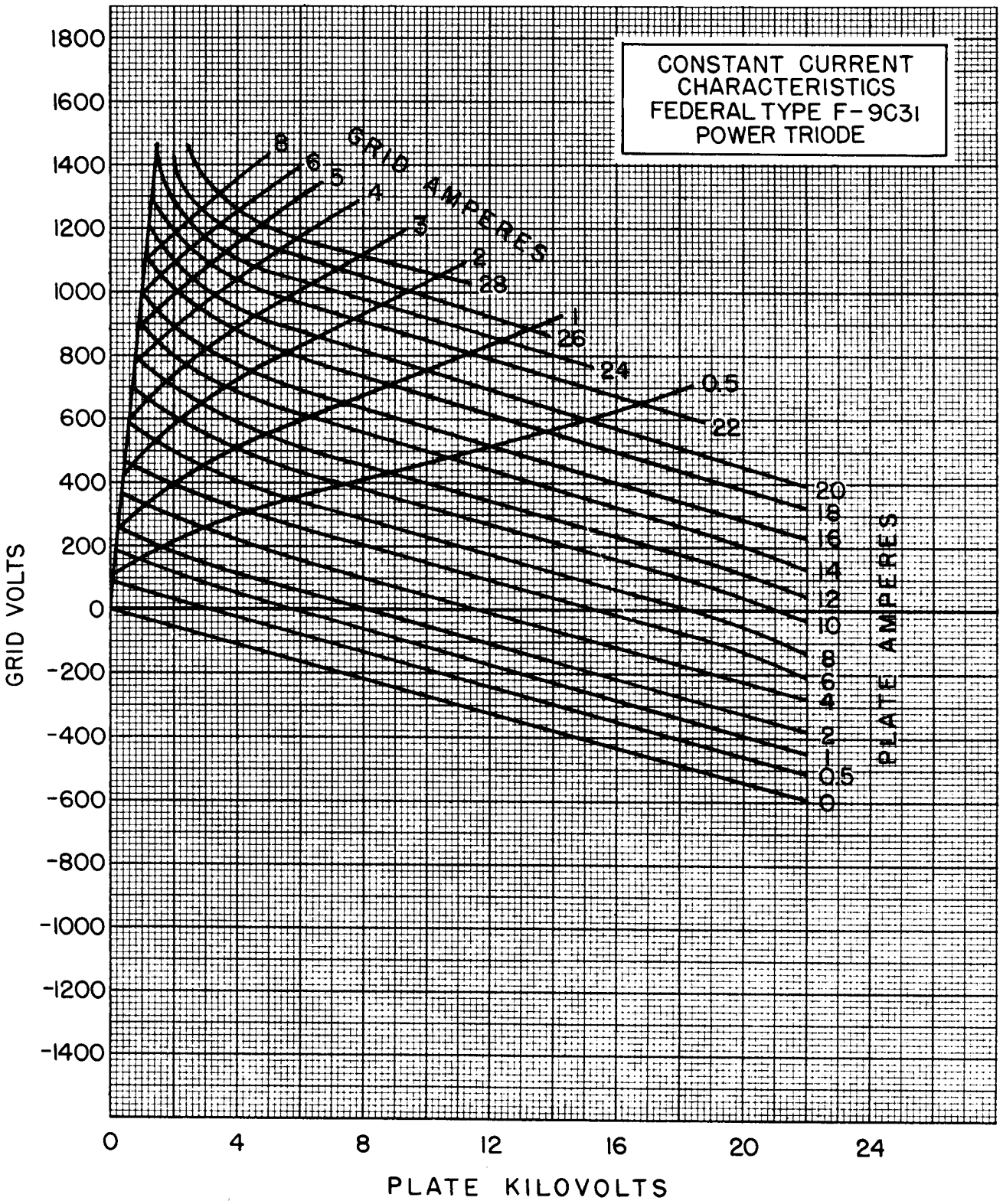

FEDERAL POWER TRIODE
Type F-9C31
20 Kilowatts Plate Dissipation

In Federal's latest 50 Kilowatt A.M. Transmitter, the F-9C31 is used in the R.F. Amplifier, the F-9C29 in the Modulator.

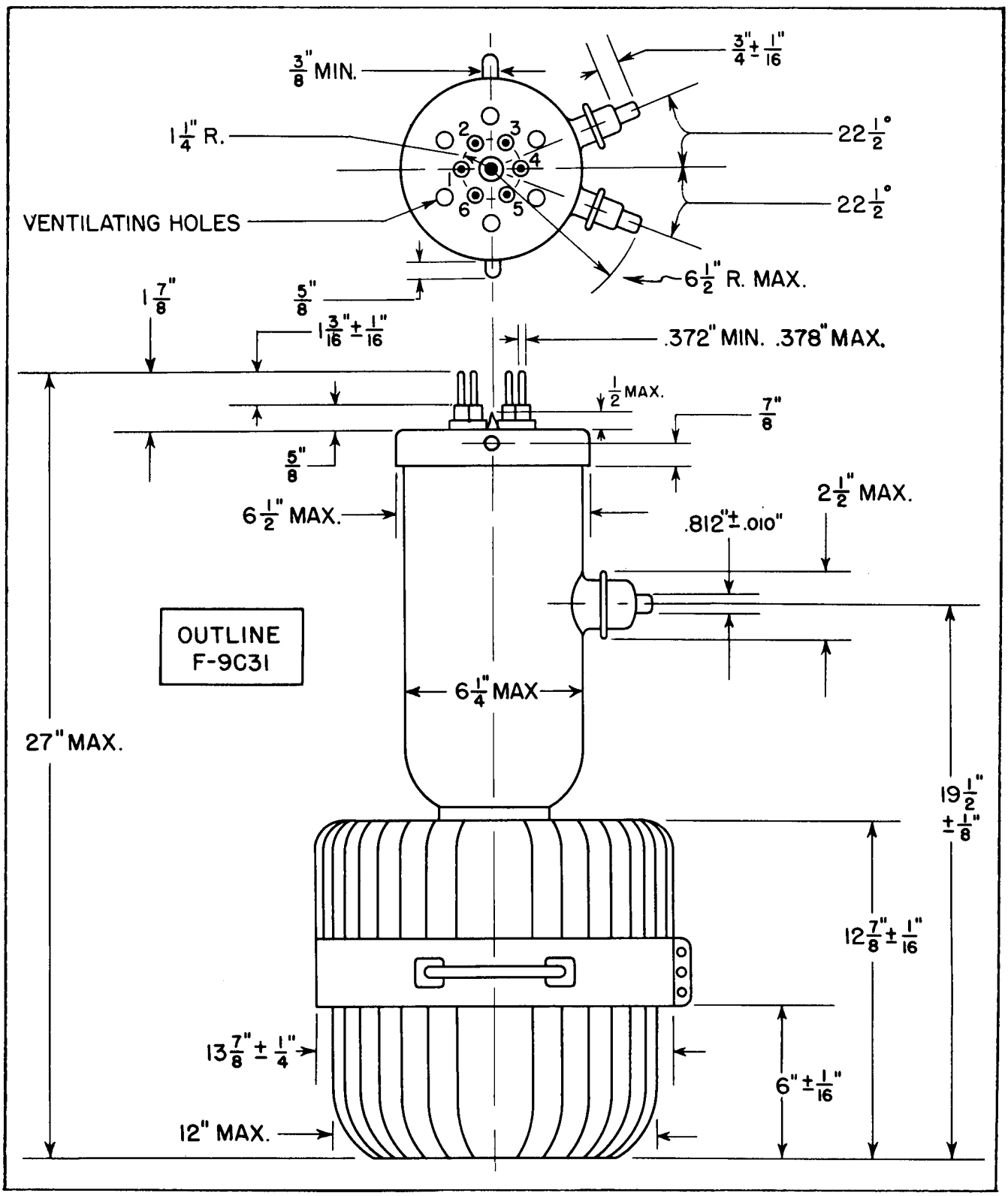

Federal Telephone and Radio Corporation
100 Kingsland Road Clifton, New Jersey

An IT&T Associate

There is an extra margin of performance in every Federal tube.

Form FJ-286 Printed in U. S. A.

ELECTRON TUBE DIVISION
P.O. Box 100
Easton, Pennsylvania 18042
Telephone 215 252-7331

F-103

CERAMIC HYDROGEN THYRATRON

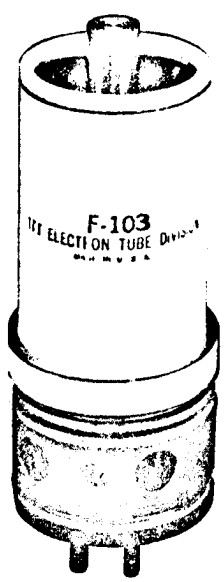

DESCRIPTION

The F-103 is a 4 megawatt ceramic hydrogen thyratron equipped with a plug-in base. This electron tube features an auxiliary electrode which is incorporated to provide a means for reducing anode delay time variation to a neligible amount over all power levels.

ELECTRICAL DATA, GENERAL	Nom.	Min.	Max.	
Heater Voltage	6.3	5.8	6.8	Volts AC
Heater Current (at 6.3 volts)	7	6	10	Amperes
Reservoir Voltage	4.4			Volts AC
Reservoir Current	4	3	5	Amperes
Minimum Heating Time		3		Minutes

MECHANICAL DATA, GENERAL		
Mounting Position	Any	
Base	Per Outline Drwg.	
Cooling (Note 3)		
Dimensions	Per Outline	

RATINGS		
Max. Peak Anode Voltage, Forward	16.0	Kilovolts
Max. Peak Anode Voltage, Inverse (Note 4)	16.0	Kilovolts
Min. Anode Supply Voltage	1.0	Kilovolts DC
Max. Peak Anode Current	500	Amperes
Max. Average Anode Current	500	Milliamperes
Max. RMS Anode Current (Note 5)	8.0	Amperes AC
Max. epy x ib x prr	10.0×10^9	
Max. Anode Current Rate of Rise	2000	Amps/u sec.
Peak Trigger Voltage (Note 6)		
Max. Anode Delay Time (Note 7)	0.3	Microsecond
Max. Anode Delay Time Drift	0.04	Microsecond
Max. Anode Delay Time Variation with Duty	0.06	Microsecond
Max. Time Jitter (Note 8)	.005	Microsecond
Auxiliary Electrode		See Note 9
Ambient Temperature	-55° to $+125^\circ$	C

NOTE 1 See outline drawing.

NOTE 2 The F-103 is provided with a separate reservoir heater connection so that the user may select the optimum hydrogen pressure for his particular application.

NOTE 3 Cooling of the anode is permissible.

NOTE 4 During the first 25 microseconds after conduction, the peak inverse anode voltage shall not exceed 5 KV.

F-103

NOTE 5 The root mean square anode current shall be computed as the square root of the product of peak current and the average current.

NOTE 6 The pulse produced by the driver circuit shall have the following characteristics when viewed at the tube socket with the tube grid disconnected.

A. Amplitude 175-600 Volts
B. Duration 2 Microseconds (at 70% Points) approx.
C. Time Rise 0.35 Microseconds (Max.)
D. Impedance 250-500 Ohms

Using the highest permissible trigger voltage, lowest trigger source impedance and minimum rise time provides for optimum delay characteristics.

NOTE 7 The time of anode delay is measured between the 26 percent point on the rising portion of the unloaded grid voltage pulse and the point at which anode conduction first evidences itself on the loaded grid pulse.

NOTE 8 Time jitter is measured at the 50 percent point on the anode current pulse.

NOTE 9 The auxiliary electrode provides a means to prime the discharge so as to reduce delay time and delay time variation to a negligible amount. For example, delay variation may be held to less than 50 nanoseconds over a range of average power from 10 to 500 watts. The auxiliary discharge may be produced in many ways including maintaining a simple dc keep-alive glow (20-30 ma, 100-300 v.) between the electrode and the cathode. The auxiliary electrode may also be connected through a current limiting resistor (200-300 ohms) to the grid trigger source. This should preferably be done at a point in the circuit such that the control grid pulse is delayed with respect to the electrode pulse. The usual grid spike protective pi network will normally provide this delay.

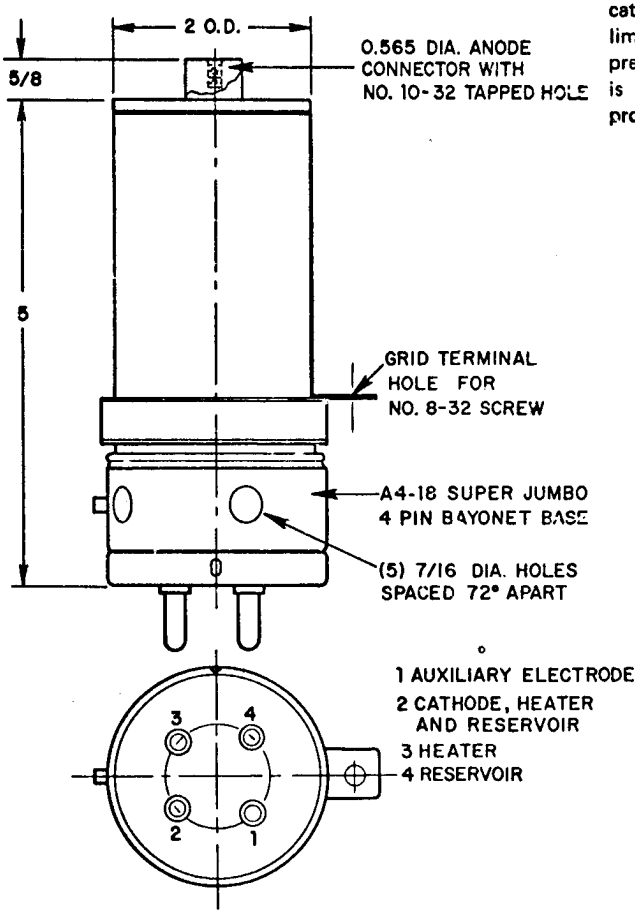

ELECTRON TUBE DIVISION ITT
P.O. Box 100 Easton, Pennsylvania 18042

CERAMIC HYDROGEN THYRATRON

Description

The F-104 is a 60 megawatt peak tetrode type ceramic envelope hydrogen thyratron. Great care has been exercised in the design of this tube in order to insure an equal distribution of capacity across the gaps. This makes the use of compensating capacitors unnecessary. Provision for liquid cooling of the anode is provided for.

A special feature of the F-104 is the auxiliary electrode which is incorporated to provide a means for reducing anode time variation to a negligible amount over all power levels.

Electrical Data, General:	Nom.	Min.	Max.	
Heater Voltage	6.3	5.8	6.8	Volts AC
Heater Current (at 6.3 volts)		25	35	Amperes
Heater (Note 1)				
Reservoir Voltage (Note 2)		3.5	5.5	Volts
Reservoir Current at 4.5 volts		8	14	Amperes
Minimum Heating Time		5		Minutes

Mechanical Data, General:		
Mounting Position	Vertical	Base Down
Base (Per Outline)		
Cooling (Note 3)		
Net Weight		15 Pounds
Dimensions (See Outline Drawing)		

Ratings		
Max. Peak Anode Voltage, Forward	50.0	Kilovolts
Max. Peak Anode Voltage, Inverse (Note 4)	50.0	Kilovolts
Min. Anode Supply Voltage (Note 5)	2.5	Kilovolts
Max. Peak Anode Current	2400	Amperes
Max. Average Anode Current	4.0	Amperes
Max. RMS Anode Current (Note 6)	90	Amperes AC
Max. epy x ib x prr	55×10^9	
Max. Anode Current Rate of Rise	15,000	Amps./u sec
Trigger Voltage (Note 7)		

Max. Anode Delay Time (Notes 8 & 9)	0.4	Microseconds
Max. Anode Delay Time Drift (Notes 8 & 9)	0.1	Microsecond
Max. Time Jitter	.002	Microsecond
Ambient Temperature	-55° to 150°	C

Note 1:

Cathode connected to center of cathode heater.

Note 2:

Reservoir voltage is marked on the base of each tube. This is the correct voltage for one typical operating condition but is not the optimum value for all types of operation. This value may be used initially in new applications and the optimum value may then be obtained by exploring the range of voltage on either side of that marked on the tube. Excess reservoir voltage will result in a failure of the thyratron to deionize between pulses (continuous conduction). Insufficient reservoir voltage will result in excess anode dissipation as indicated by heating of the anode. The anode dissipation must not be permitted to exceed 1500 watts as measured in the cooling water. A useful formula for this determination follows:

$$P = 264\ Qw\ (T2 - T1)$$

P	=	Power in Watts
Qw	=	Flow in gallons/minute
T2 - T1	=	Outlet and inlet water temperatures in degrees Kelvin, respectively

The optimum reservoir voltage is the midpoint between these two extremes. In certain applications it may be necessary to provide a regulated source to assure operation within the permissible range of reservoir voltages.

Note 3:

Cooling of the anode is not required for operation at heat factors under 30×10^9. Above this value, forced cooling is necessary. This may be accomplished by an airblast into the anode cup for modest requirements (10 CFM), by compressed air directed through the cooling chamber, or by liquid coolants circulated through the cooling chamber. A minimum flow of 1 gallon per minute of water is required. The water inlet temperature shall not be less than 5°C, nor the outlet temperature higher than 95°C. Maximum water pressure under a normal condition is 50 psi (100 psi may be tolerated for short periods). Pressure drop is approximately 1 psi. Distilled water is recommended. Any water with less than 10 grains per gallon hardness is satisfactory.

Note 4:

During the first 25 microseconds after conduction, the peak inverse anode voltage shall not exceed 10 kv.

Note 5:

A resistance divider of 20 to 40 megohms should be connected between anode and cathode. The center tap of this divider should be connected to the second or gradient grid. It is recommended that this arrangement be employed whether low voltage operation is required or not. This divider is a necessity for keyed grid operation.

Note 6:

The root mean square anode current shall be computed as the square root of the product of peak current and the average current.

Note 7:

The pulse produced by the dirver circuit shall have the following characteristics when viewed at the socket with the tube removed.

A.	Amplitude	750 - 4000 volts
B.	Duration	2 microseconds (at 70% points)
C.	Time of Rise	0.35 microseconds (Min.)
D.	Impedance	10 - 100 ohms

Note 8:

The limits of anode time delay, delay drift and jitter are based on using a marginal trigger without employing the auxiliary electrode. Using the highest permissible trigger voltage and lowest trigger source impedance materially reduces these values and the auxiliary electrode further reduces these values well below the limits specified.

Note 9:

The auxiliary electrode provides a means to prime the discharge so as to reduce delay time and delay time variation to a negligible amount. For example, delay variation may be held to less than 20 nanoseconds over a range of power from 2 to 60 kilowatts.

The auxiliary discharge may be produced in may ways including maintaining a simple dc keep-alive glow (200 - 300 ma, 200-300 v.) between the electrode and the cathode. The auxiliary

electrode may also be connected through a current limiting resistor (200 - 300 ohms) to the grid trigger source. This should preferably be done at a point in the circuit such that the control grid pulse is delayed withrespect to the electrode pulse. The usual grid spike protective pi network will noramlly provide this delay.

When not used the auxiliary electrode should be connected to the cathode through a 300 ohm resistor.

Additional information for specific applications can be obtained from the

ITT Electron Tube Division
Electron Tube Applications Section
P. O. Box 100
Easton, Pennsylvania 18042

Tolerances ±1/4

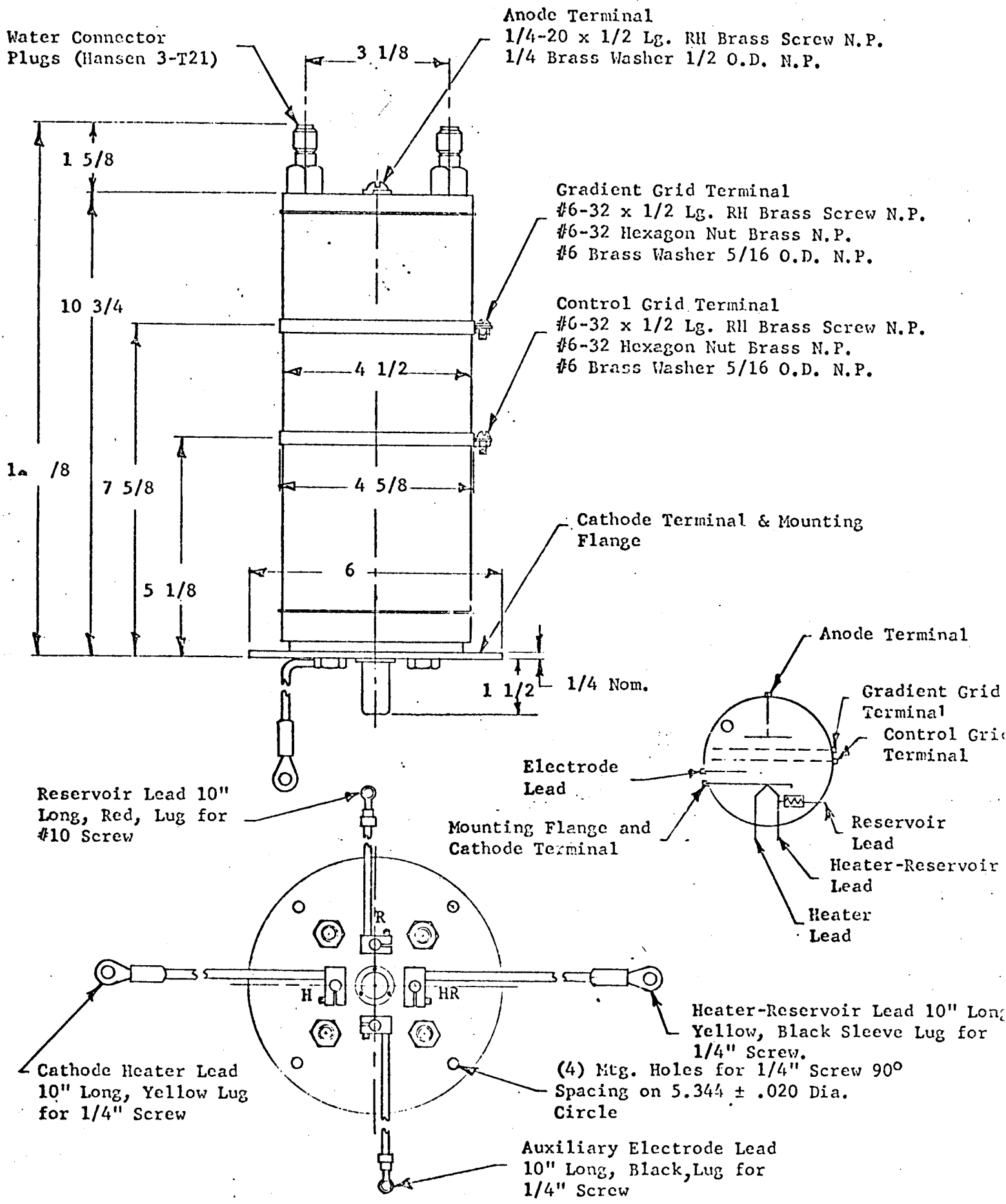

F-104

OUTLINE

FEDERAL POWER TRIODE
Type F-110-X
25 Kilowatts Plate Dissipation

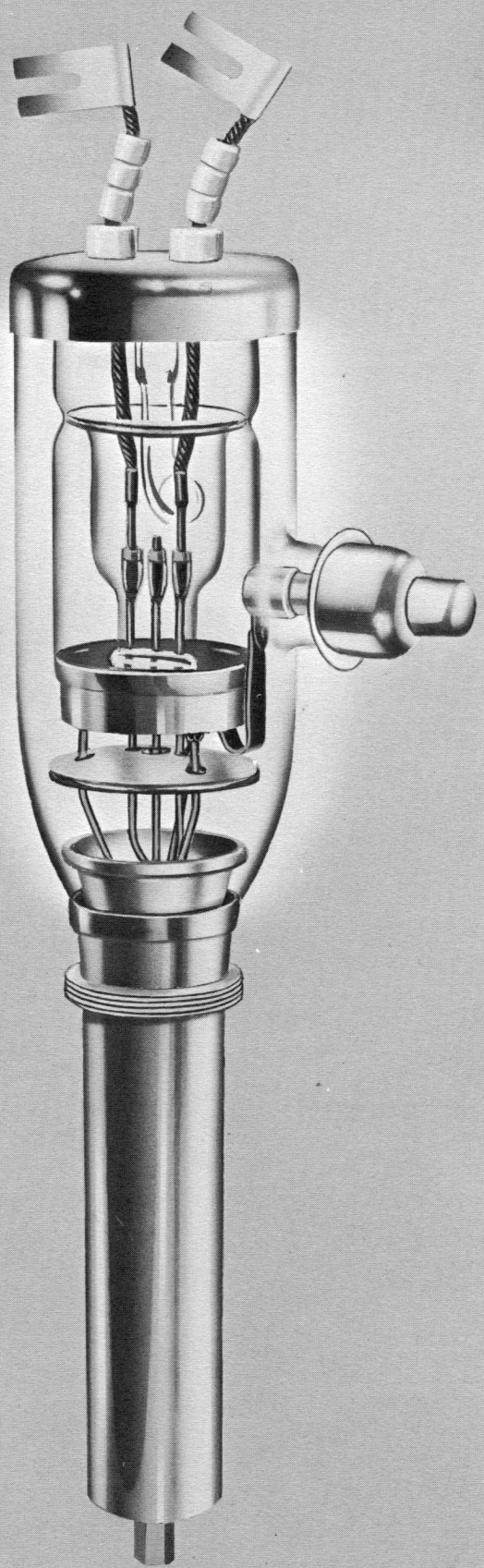

GENERAL DATA

DESCRIPTION:

Federal's F-110-X is a three-electrode tube designed for use as a radio-frequency power amplifier and oscillator. The anode is water-cooled, capable of dissipating 25 kilowatts. The cathode is a pure tungsten filament. Maximum ratings apply up to 3 megacycles with operation permissible up to 20 megacycles at reduced ratings.

Electrical:

Filament Voltage	28 Volts
Filament Current	51 Amperes
Filament Starting Current	102 Amperes
Peak Cathode Current	12.5 Amperes
Amplification Factor, at I_b=0.75 amp. E_c=—300 volts	40
Interelectrode Capacitances	
Grid-Plate	30 $\mu\mu$f
Grid-Filament	20 $\mu\mu$f
Plate-Filament	2.7 $\mu\mu$f

Mechanical:

Mounting Position— Vertical, Anode Down	
Type of Cooling—Water	
Water Flow on Anode	10 GPM
Maximum Outgoing Water Temperature	70° C
Maximum Glass Temperature	150° C
Net Weight, approximate	4 Pounds

Copyright 1953, Federal Telephone and Radio Company

FEDERAL POWER TRIODE
Type F-110-X
25 Kilowatts Plate Dissipation

Maximum Ratings vs. Operating Frequency

Frequency	3	20 Megacycles
Percentage of Maximum Rated Plate Voltage and Plate Input		
Class C—Telegraphy	100	42 Per Cent

Maximum Ratings and Typical Operating Conditions

RADIO-FREQUENCY POWER AMPLIFIER AND OSCILLATOR—CLASS C TELEGRAPHY

(Key-down conditions per tube without amplitude Modulation)

Maximum Ratings, Absolute Values

DC Plate Voltage	20,000 Volts
DC Grid Voltage	—5,000 Volts
DC Plate Current	2.5 Amperes
DC Grid Current	0.5 Ampere
Plate Input	50 Kilowatts
Plate Dissipation	25 Kilowatts

Typical Operation

DC Plate Voltage	10,000 Volts
DC Grid Voltage	—360 Volts
Peak R-F Grid Voltage	1,760 Volts
DC Plate Current	2.5 Amperes
DC Grid Current, approx.	0.325 Ampere
Driving Power, approx.	550 Watts
Power Output, approx.	16.8 Kilowatts

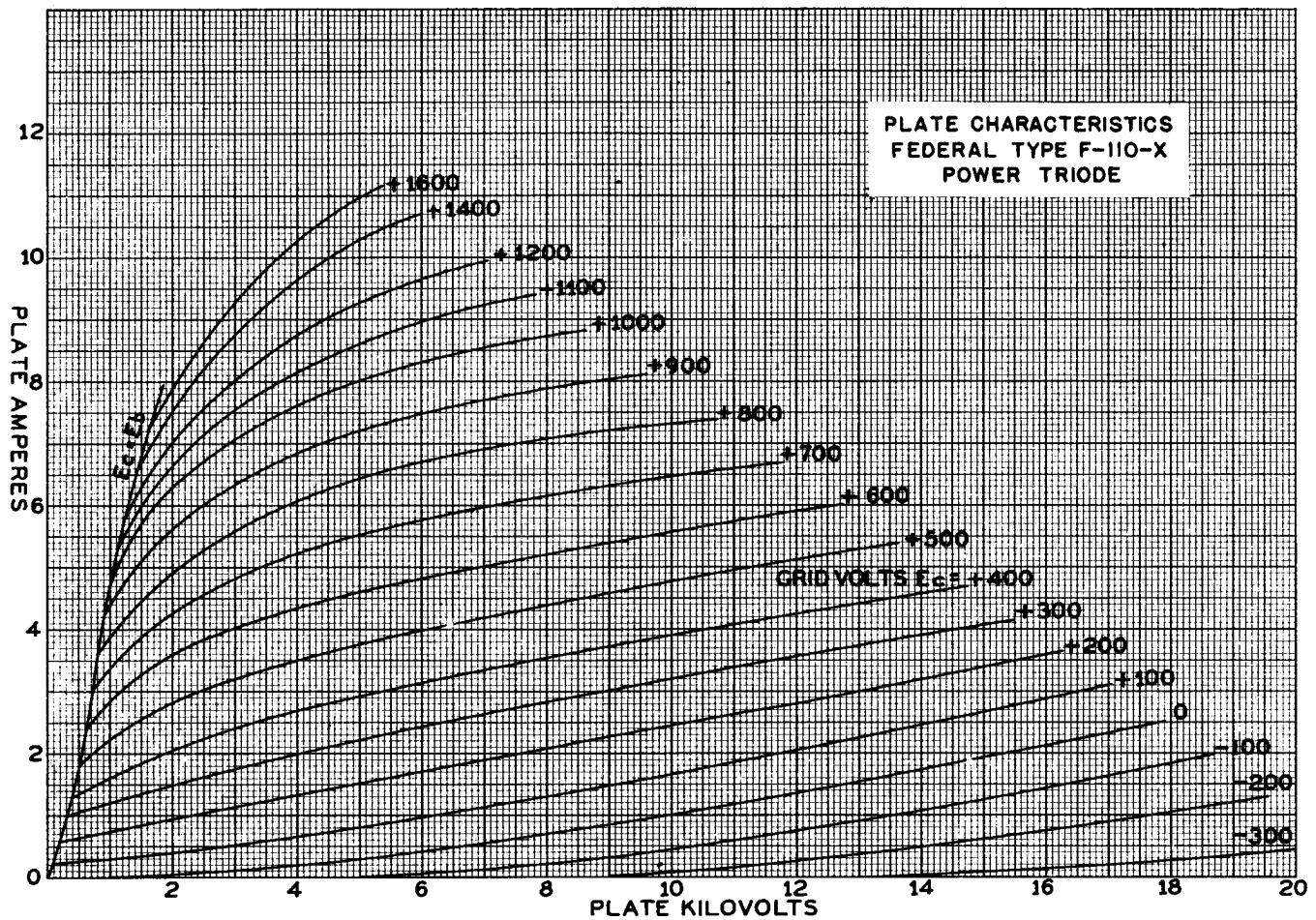

Buyers who specify "Federal" because they want *long-lived* tubes, know from experience they'll get what they want.

FEDERAL POWER TRIODE
Type F-110-X
25 Kilowatts Plate Dissipation

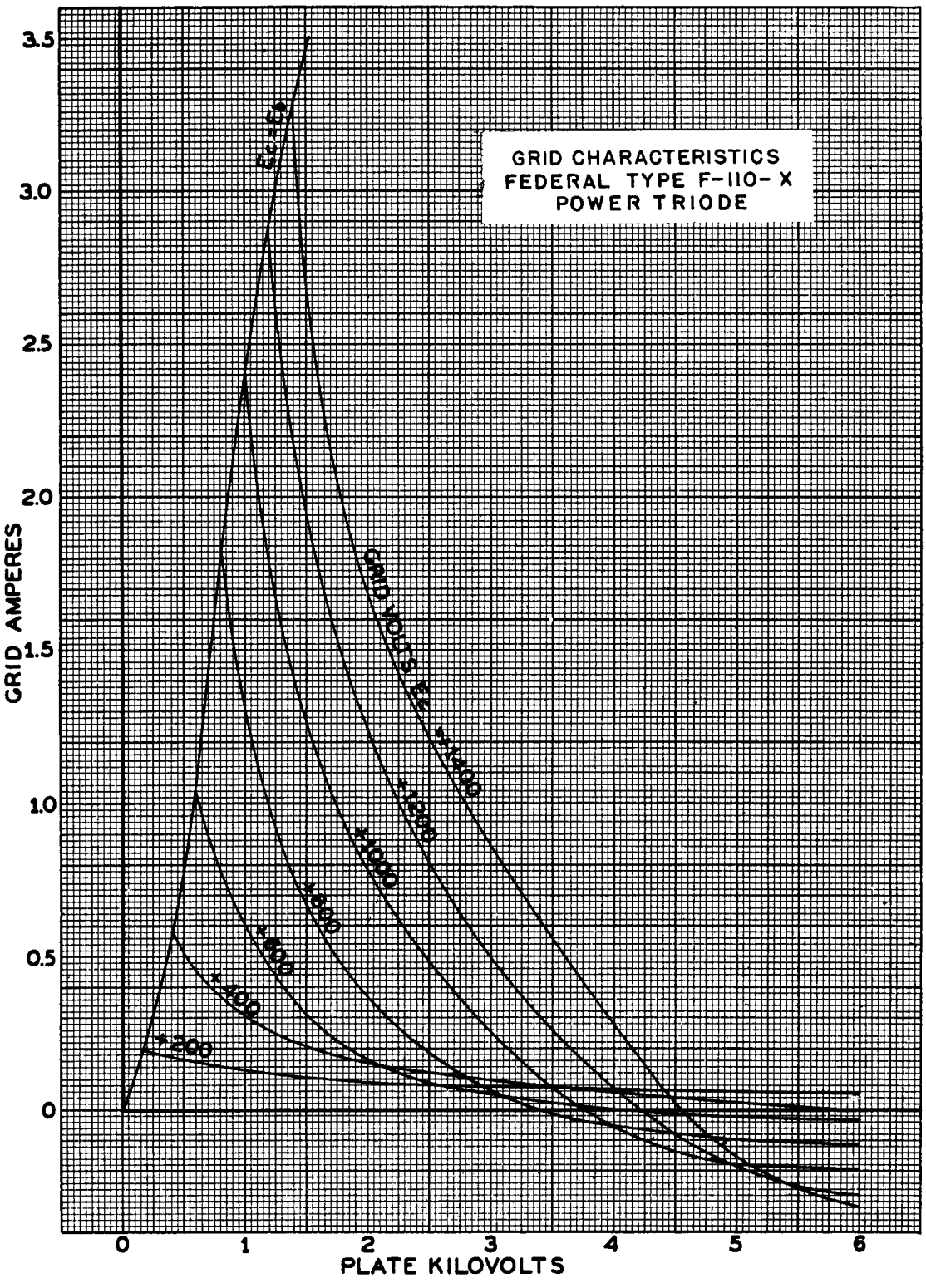

FEDERAL POWER TRIODE
Type F-110-X
25 Kilowatts Plate Dissipation

Federal always has made *first-quality* tubes, and the record goes back for more than 40 years.

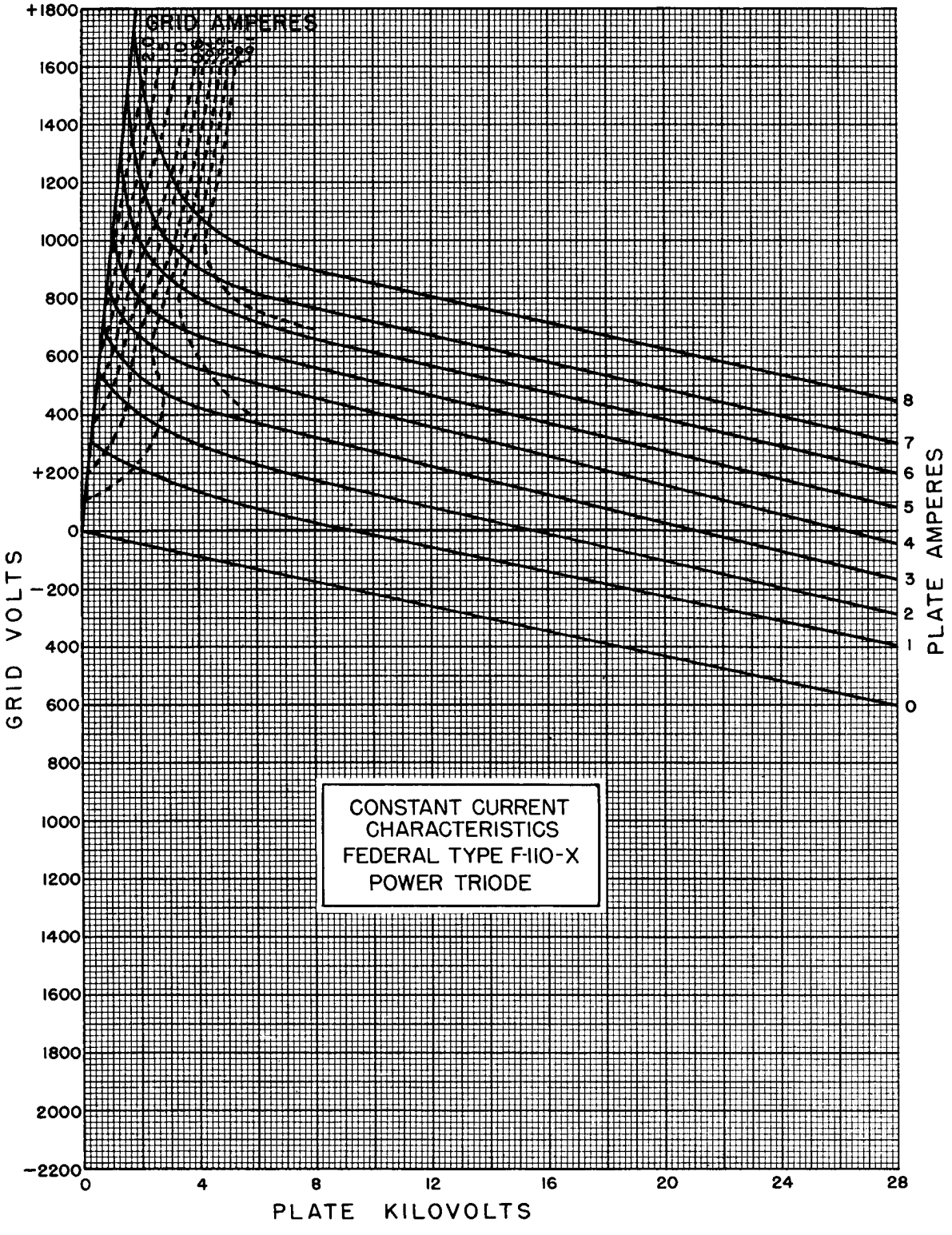

Federal's name on a tube signifies the best in design, engineering, materials, components and craftsmanship.

FEDERAL POWER TRIODE
Type F-110-X
25 Kilowatts Plate Dissipation

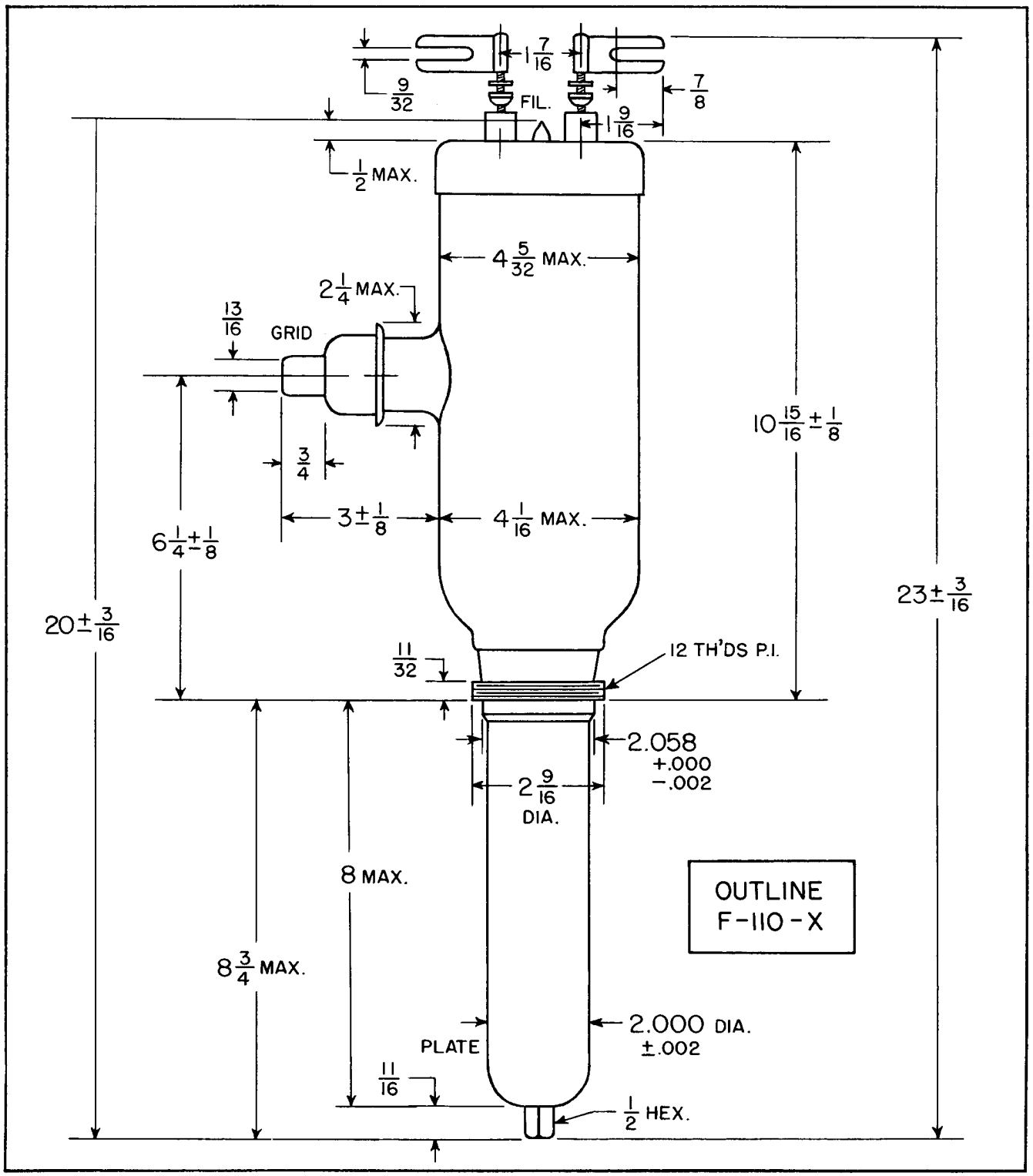

Federal Telephone and Radio Company
100 Kingsland Road Clifton, New Jersey

Federal Always Has
Made Better Tubes

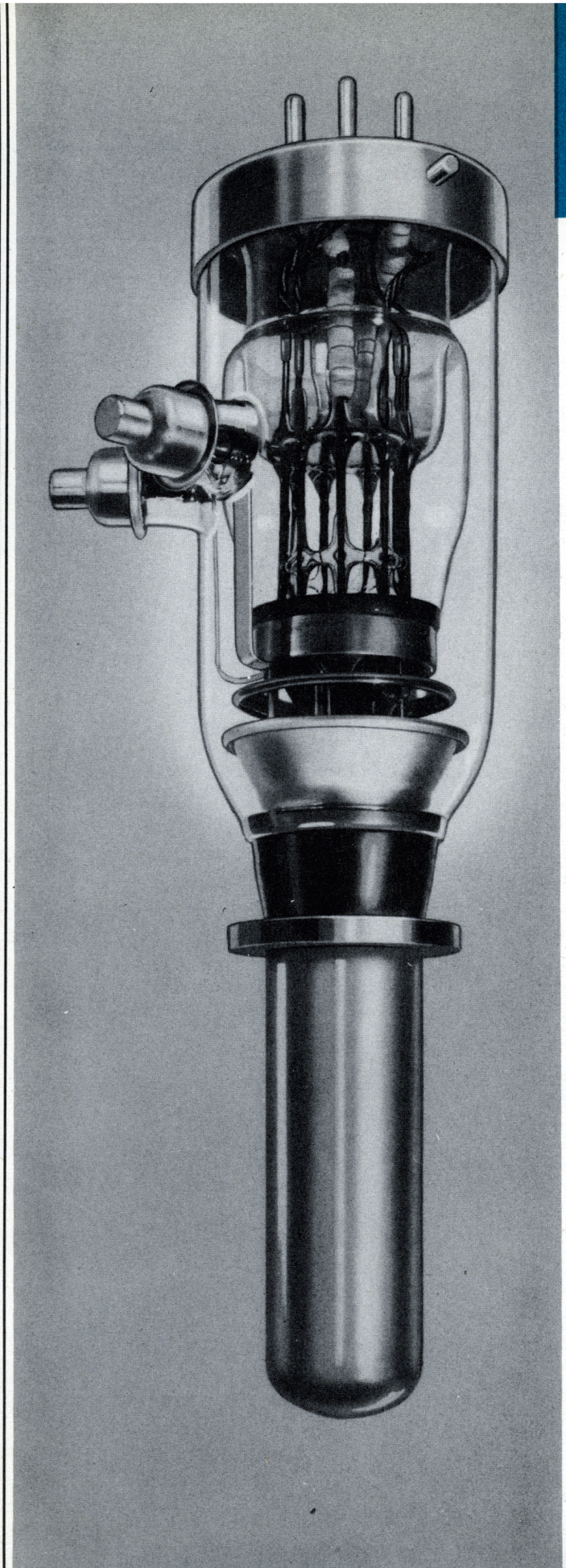

FEDERAL POWER TRIODE
Type F-124-A
40 Kilowatts Plate Dissipation

GENERAL DATA

DESCRIPTION:

Federal's F-124-A is a three-electrode tube designed for use as radio-frequency amplifier, oscillator, or Class B modulator. The anode is water-cooled, capable of dissipating 40 kilowatts. The cathode, a pure tungsten multi-strand filament, may be operated on DC, 1 Ø, 3 Ø, or 6 Ø AC excitation. Maximum ratings apply up to 20 megacycles.

Electrical:

Filament Voltage§	27.2 Volts
Filament Current§	205.5 Amperes
Filament Starting Current§	308 Amperes max.
Filament Cold Resistance	.015 Ohms
Peak Cathode Current	35 Amperes
Amplification Factor, at	
I_b = 1.6 amps	
E_c = —200 volts	40.5
Interelectrode Capacitances	
Grid-Plate	35 $\mu\mu$f
Grid-Filament	46 $\mu\mu$f
Plate-Filament	5.6 $\mu\mu$f

§Single phase excitation.

Mechanical:

Mounting Position—Vertical, anode down	
Type of Cooling—Water	
Water Flow on Anode	15 GPM Min.
Maximum Outgoing Water Temperature	70° C
Maximum Glass Temperature	150° C
Net Weight, approximate	11½ Pounds

Copyright 1949, Federal Telephone and Radio Corporation

FEDERAL POWER TRIODE
Type F-124-A
40 Kilowatts Plate Dissipation

For many years leading broadcast stations have chosen Federal's F-124-A for their 50 kilowatt transmitters . . . convincing evidence that F-124-A service satisfies.

Maximum Ratings and Typical Operating Conditions

AUDIO-FREQUENCY POWER AMPLIFIER AND MODULATOR—CLASS B

Maximum Ratings, Absolute Values

DC Plate Voltage	20,000 Volts
Maximum Signal DC Plate Current†	5 Amperes
Maximum Signal Plate Input†	50 Kilowatts
Plate Dissipation†	30 Kilowatts

Typical Operation

(Unless otherwise specified, values are for two tubes)

DC Plate Voltage	10,000 Volts
DC Grid Voltage	—200 Volts
Peak A-F Grid-to-Grid Voltage	1,600 Volts
Zero Signal DC Plate Current	0.5 Amperes
Maximum Signal DC Plate Current	6 Amperes
Effective Load Resistance, Plate to Plate	3,750 Ohms
Max. Sig. Driving Power, approx.	360 Watts
Max. Sig. Power Output, approx.	39 Kilowatts

†Averaged over any audio frequency cycle of sine-wave form.

RADIO-FREQUENCY POWER AMPLIFIER—CLASS B

(Carrier conditions per tube for use with a maximum modulation factor of 1.0)

Maximum Ratings, Absolute Values

DC Plate Voltage	20,000 Volts
DC Plate Current	3.5 Amperes
Plate Input	60 Kilowatts
Plate Dissipation	40 Kilowatts

Typical Operation

DC Plate Voltage	17,500 Volts
DC Grid Voltage	—300 Volts
Peak R-F Grid Voltage	480 Volts
DC Plate Current	2.1 Amperes
DC Grid Current	—0.02 Amperes
Driving Power, approximate‡	100 Watts
Power Output, approximate	13.1 Kilowatts

‡At crest of audio-frequency cycle with modulation factor of 1.0.

PLATE-MODULATED RADIO-FREQUENCY POWER AMPLIFIER—CLASS C TELEPHONY

(Carrier conditions per tube for use with a maximum modulation factor of 1.0)

Maximum Ratings, Absolute Values

DC Plate Voltage	14,000 Volts
DC Grid Voltage	—3,000 Volts
DC Plate Current	3.5 Amperes
DC Grid Current	1 Ampere
Plate Input	60 Kilowatts
Plate Dissipation	30 Kilowatts

Typical Operation

DC Plate Voltage	12,000 Volts
DC Grid Voltage	—725 Volts
Peak R-F Grid Voltage	1,425 Volts
DC Plate Current	3.31 Amperes
DC Grid Current	0.061 Amperes
Driving Power, approximate	200 Watts
Power Output, approximate	26.2 Kilowatts

RADIO-FREQUENCY POWER AMPLIFIER AND OSCILLATOR—CLASS C TELEGRAPHY

(Key-down conditions per tube without amplitude modulation)¶

Maximum Ratings, Absolute Values

DC Plate Voltage	20,000 Volts
DC Grid Voltage	—3,000 Volts
DC Plate Current	7 Amperes
DC Grid Current	1 Ampere
Plate Input	135 Kilowatts
Plate Dissipation	40 Kilowatts

Typical Operation

DC Plate Voltage	18,000 Volts
DC Grid Voltage	—1,100 Volts
Peak R-F Grid Voltage	2,420 Volts
DC Plate Current	6 Amperes
DC Grid Current, approximate	0.65 Amperes
Driving Power, approximate	1.5 Kilowatts
Power Output, approximate	80 Kilowatts

¶Modulation essentially negative may be used if the positive peak of the envelope does not exceed 115 per cent of carrier conditions.

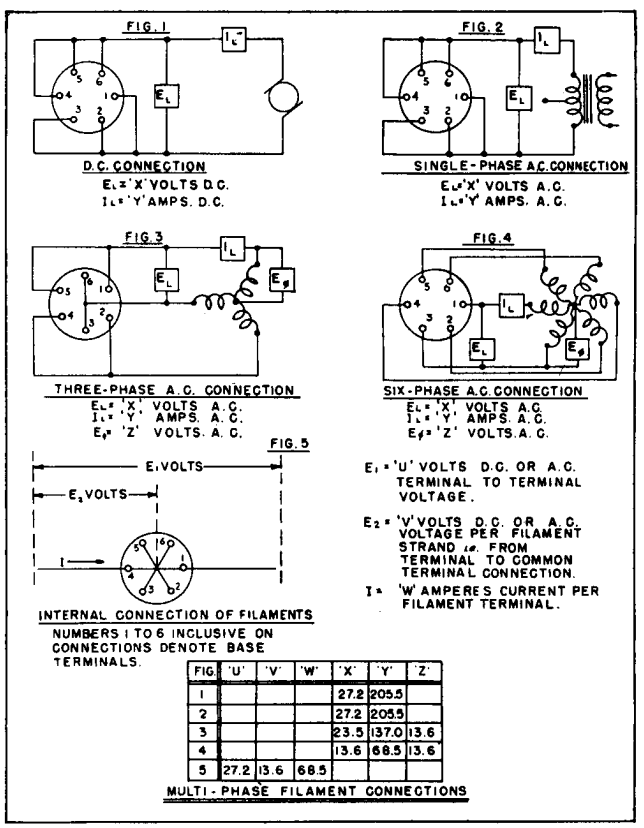

FIG.	'U'	'V'	'W'	'X'	'Y'	'Z'
1				27.2	205.5	
2				27.2	205.5	
3				23.5	137.0	13.6
4				13.6	68.5	13.6
5	27.2	13.6	68.5			

MULTI-PHASE FILAMENT CONNECTIONS

An IT&T Associate

FEDERAL POWER TRIODE
Type F-124-A
40 Kilowatts Plate Dissipation

Federal's F-124-A is operative at full rating up to 20 megacycles. It has the staying qualities inherent in all tubes of Federal design and manufacture.

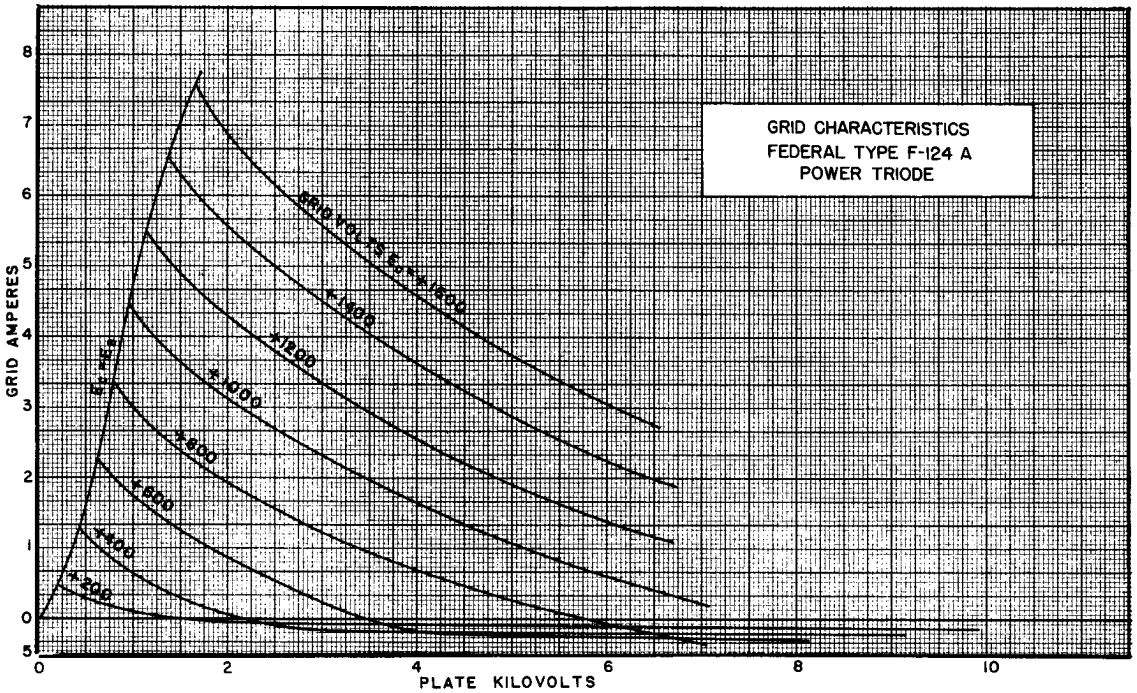

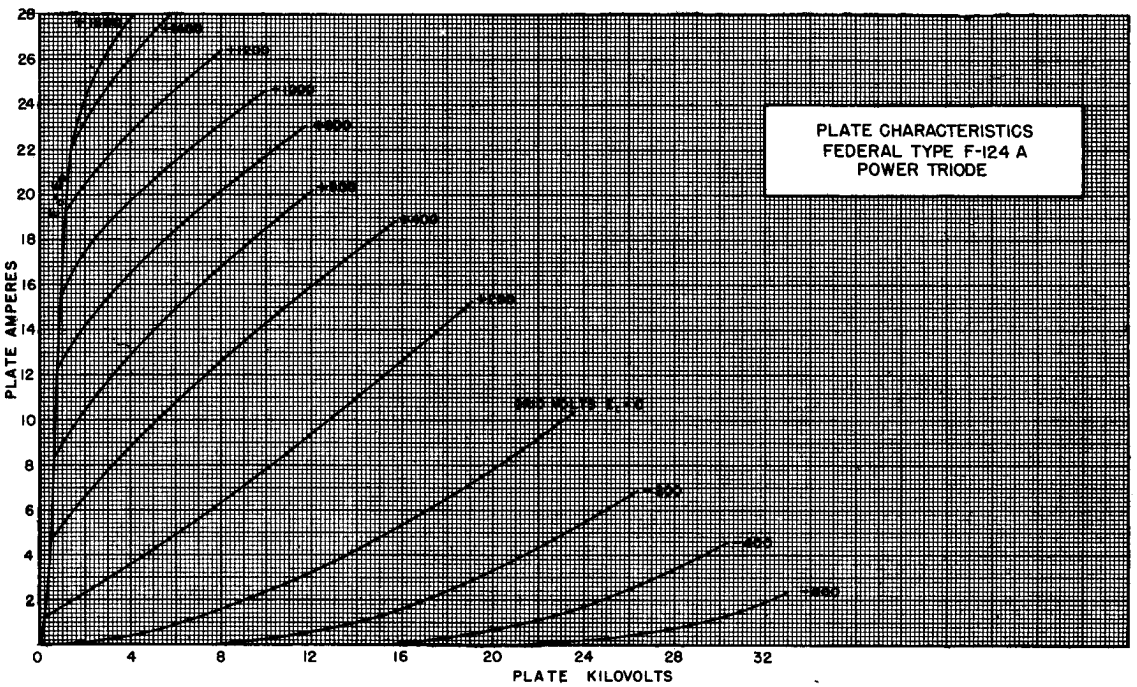

FEDERAL POWER TRIODE
Type F-124-A
40 Kilowatts Plate Dissipation

For ease in neutralization the F-124-A makes use of a dual grid terminal . . . Federal never overlooks an opportunity to improve each detail of design.

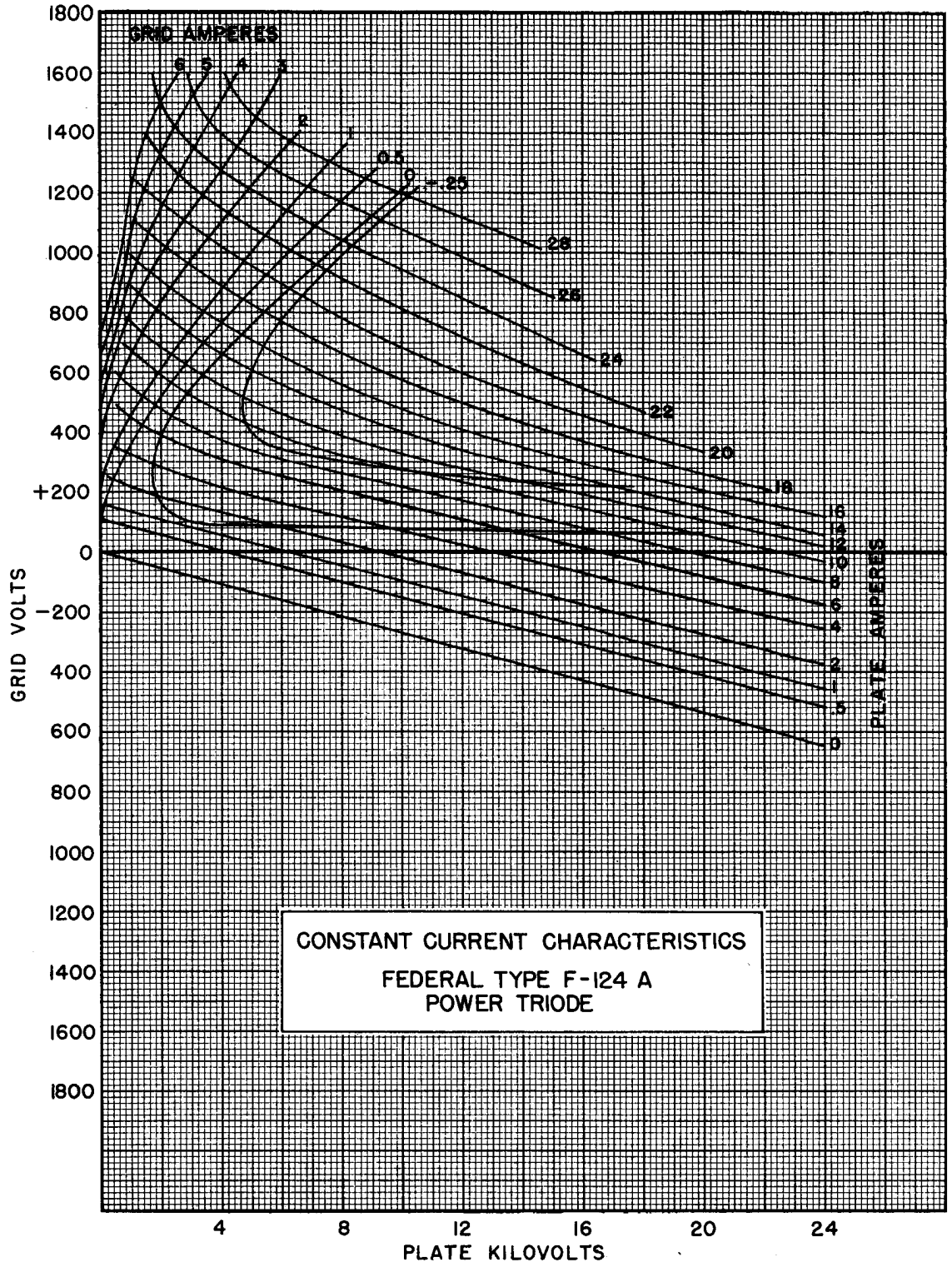

Federal's parts processing and exhaust techniques are reflected in the F-124-A, a typical example of *fine* craftsmanship in vacuum tube manufacture.

FEDERAL POWER TRIODE
Type F-124-A
40 Kilowatts Plate Dissipation

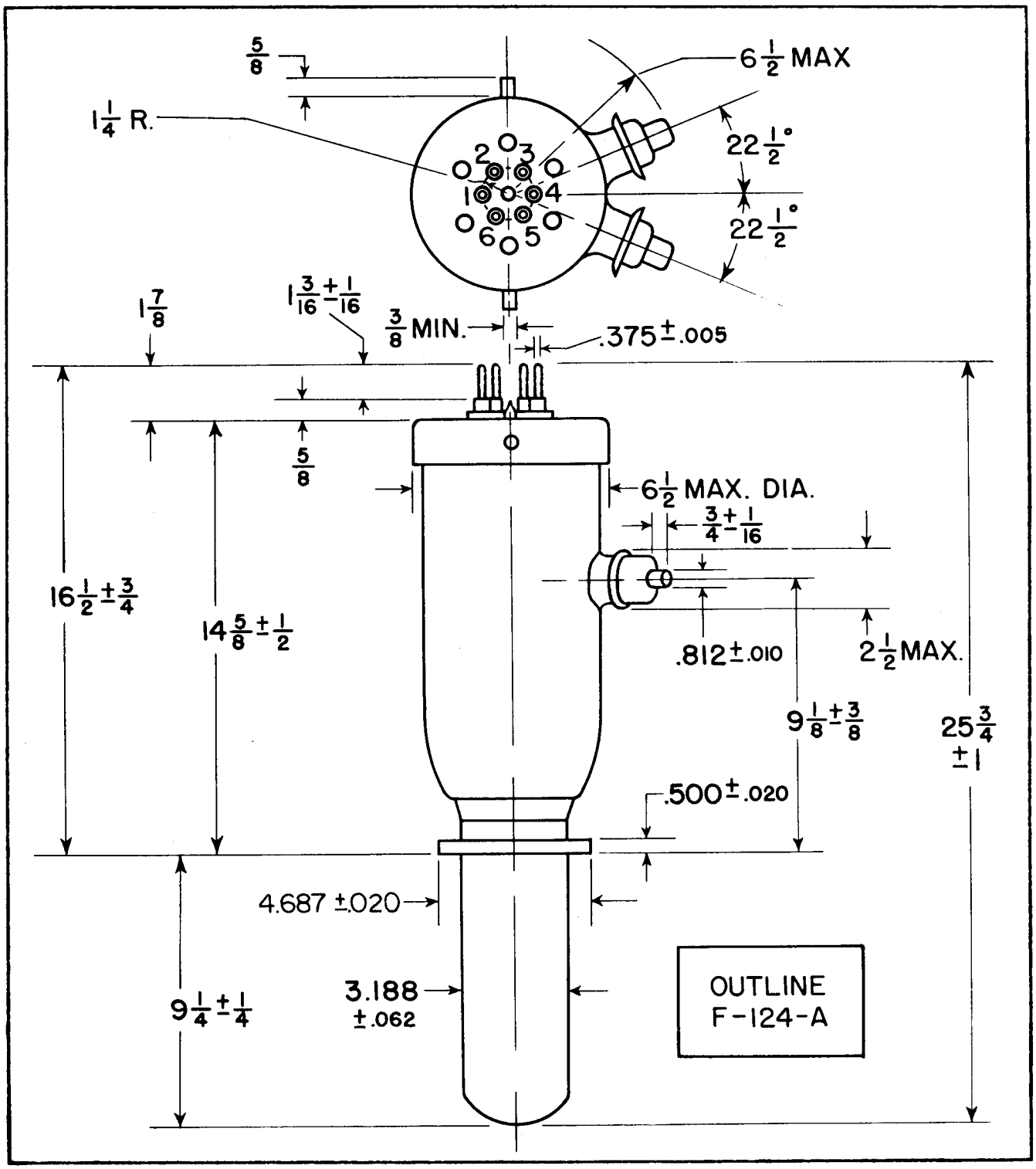

Federal Telephone and Radio Corporation
100 Kingsland Road Clifton, New Jersey

An IT&T Associate

Federal Always Has
Made Better Tubes

Form FJ-132 Printed in U. S. A.

FEDERAL POWER TRIODE
Type F-124-R
20 Kilowatts Plate Dissipation

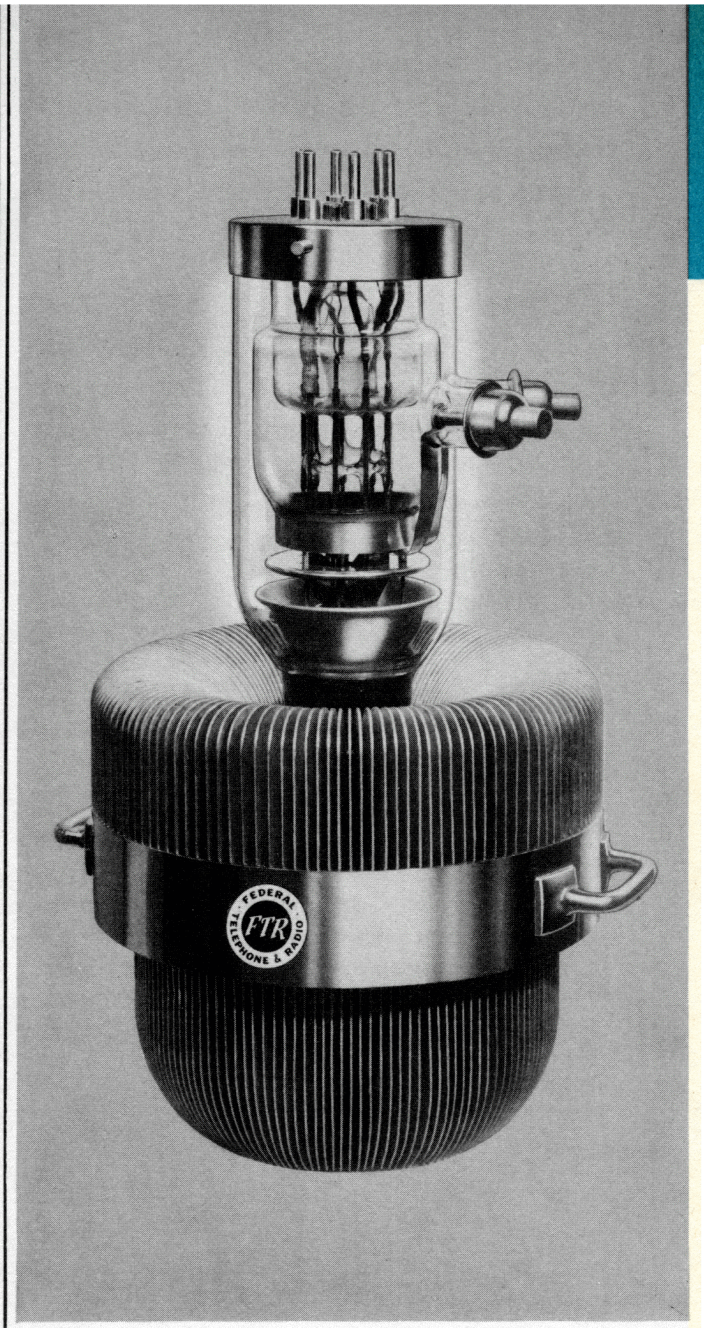

GENERAL DATA

DESCRIPTION:

Federal's F-124-R is a three-electrode tube engineered to serve as a radio-frequency amplifier, oscillator, or as a Class B modulator. The forced-air-cooled anode is capable of dissipating 20 kilowatts. The cathode is a pure tungsten multi-strand filament and may be operated on direct current, single-phase, three-phase, or six-phase alternating current excitation. Maximum ratings apply up to 20 megacycles.

Electrical:

Filament Voltage§	27.2 Volts
Filament Current§	205.5 Amperes
Filament Starting Current§	308 Amperes max.
Filament Cold Resistance§	.015 Ohms
Peak Cathode Current	35 Amperes
Amplification Factor, $E_c = -200V$ $I_b = 1.6A$	40.5
Interelectrode Capacitances	
Grid-Plate	40 $\mu\mu$f
Grid-Filament	46 $\mu\mu$f
Plate-Filament	5.6 $\mu\mu$f

§Single phase excitation.

Mechanical:

Mounting Position—Vertical, Anode Down			
Type of Cooling—Forced Air			
Maximum Incoming Air Temperature			45° C
Required Air Flow on Anode			
Plate Dissipation—Kilowatts	20	16	12
Minimum Air Flow—Cubic Feet per Minute	2,100	1,600	1,200
Pressure—Inches Water	2.15	1.24	0.70
Maximum Glass Temperature			150° C
Net Weight, approximate			202 Lbs.

It's in Federal's design where efficient tube performance gets its start. It's in the tube's performance *in service* where Federal's authentic design reveals its merits.

Copyright 1950, Federal Telephone and Radio Corporation

FEDERAL POWER TRIODE
Type F-124-R
20 Kilowatts Plate Dissipation

Federal's engineers are ready to consult with you on the application of Federal tubes to your designs. Write, phone or wire to arrange your conference date.

Maximum Ratings and Typical Operating Conditions

AUDIO-FREQUENCY POWER AMPLIFIER AND MODULATOR—CLASS B

Maximum Ratings, Absolute Values

DC Plate Voltage	20,000 Volts
Maximum Signal DC Plate Current†	5 Amperes
Maximum Signal Plate Input†	50 Kilowatts
Plate Dissipation†	20 Kilowatts

Typical Operation

(Unless otherwise specified, values are for two tubes)

DC Plate Voltage	10,000 Volts
DC Grid Voltage	—200 Volts
Peak A-F Grid-to-Grid Voltage	1,600 Volts
Zero Signal DC Plate Current	0.5 Amperes
Maximum Signal DC Plate Current	6.0 Amperes
Effective Load Resist., Plate to Plate	3,750 Ohms
Max. Sig. Driving Power, approx.	360 Watts
Max. Sig. Power Output, approx.	39 Kilowatts

†Averaged over any audio-frequency cycle of sine-wave form.

RADIO-FREQUENCY POWER AMPLIFIER—CLASS B

(Carrier conditions per tube for use with a maximum modulation factor of 1.0)

Maximum Ratings, Absolute Values

DC Plate Voltage	20,000 Volts
DC Plate Current	3.5 Amperes
Plate Input	30 Kilowatts
Plate Dissipation	20 Kilowatts

Typical Operation

DC Plate Voltage	17,500 Volts
DC Grid Voltage	—360 Volts
Peak R-F Grid Voltage	120 Volts
DC Plate Current	1.68 Amperes
DC Grid Current, approximate	0.00 Amperes
Driving Power, approximate‡	80 Watts
Power Output, approximate	10 Kilowatts

‡At crest of audio-frequency cycle with modulation factor of 1.0.

PLATE-MODULATED RADIO-FREQUENCY POWER AMPLIFIER—CLASS C TELEPHONY

(Carrier conditions per tube for use with a maximum modulation factor of 1.0)

Maximum Ratings, Absolute Values

DC Plate Voltage	14,000 Volts
DC Grid Voltage	—3,000 Volts
DC Plate Current	3.5 Amperes
DC Grid Current	1.0 Amperes
Plate Input	60 Kilowatts
Plate Dissipation	15 Kilowatts

Typical Operation

DC Plate Voltage	12,000 Volts
DC Grid Voltage	—900 Volts
Peak R-F Grid Voltage	1,630 Volts
DC Plate Current	2.8 Amperes
DC Grid Current, approximate	0.18 Amperes
Driving Power, approximate	275 Watts
Power Output, approximate	26.2 Kilowatts

RADIO-FREQUENCY POWER AMPLIFIER AND OSCILLATOR—CLASS C TELEGRAPHY

(Key-down conditions per tube without amplitude modulation)¶

Maximum Ratings, Absolute Values

DC Plate Voltage	20,000 Volts
DC Grid Voltage	—3,000 Volts
DC Plate Current	7 Amperes
DC Grid Current	1 Ampere
Plate Input	100 Kilowatts
Plate Dissipation	20 Kilowatts

Typical Operation

DC Plate Voltage	15,000 Volts
DC Grid Voltage	—1,000 Volts
Peak R-F Grid Voltage	2,040 Amperes
DC Plate Current	4.3 Amperes
DC Grid Current, approximate	0.47 Amperes
Driving Power, approximate	700 Watts
Power Output, approximate	50 Kilowatts

¶Modulation essentially negative may be used if the positive peak of the envelope does not exceed 115 per cent of carrier conditions.

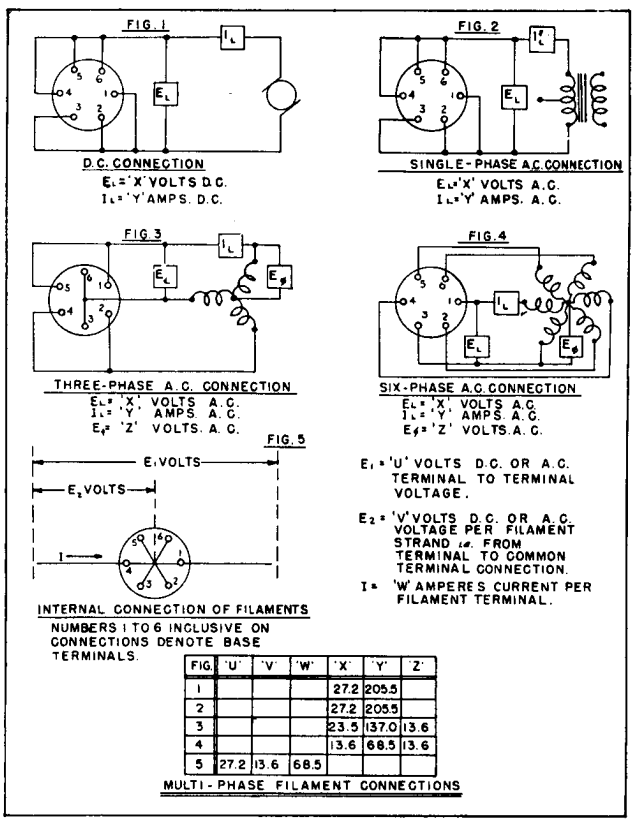

FIG.	'U'	'V'	'W'	'X'	'Y'	'Z'
1				27.2	205.5	
2				27.2	205.5	
3				23.5	137.0	13.6
4				13.6	68.5	13.6
5	27.2	13.6	68.5			

MULTI-PHASE FILAMENT CONNECTIONS

Precision craftsmanship in the manufacture of power tubes was practiced by Federal at the birth of the industry; Federal has continued the habit ever since.

FEDERAL POWER TRIODE
Type F-124-R
20 Kilowatts Plate Dissipation

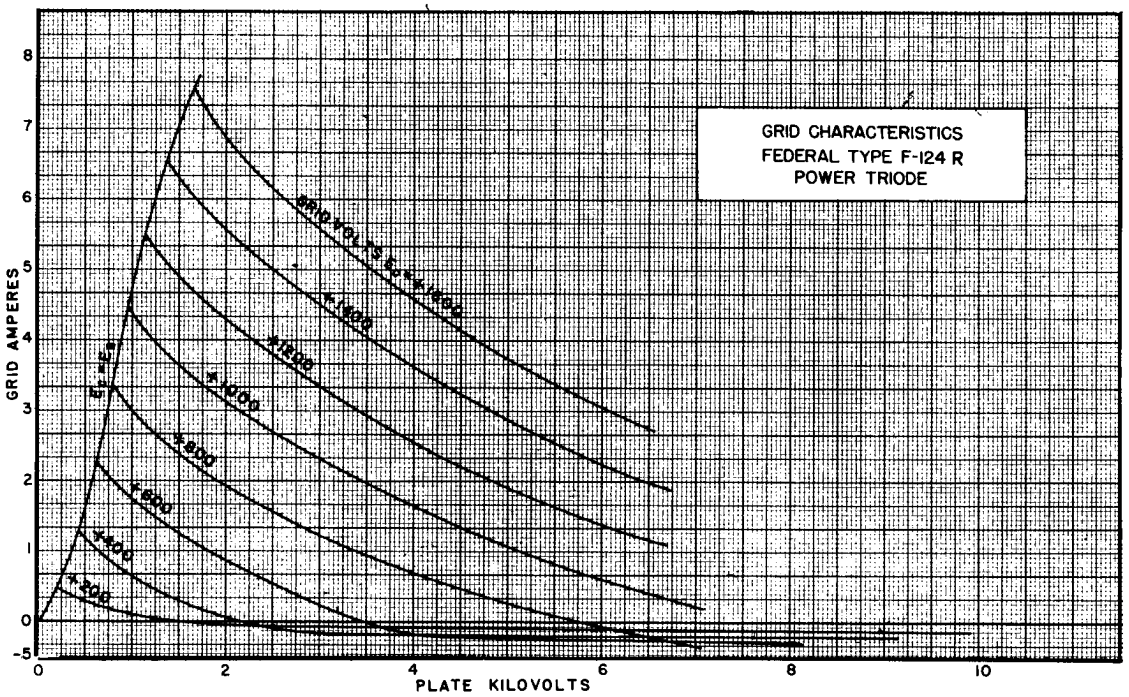

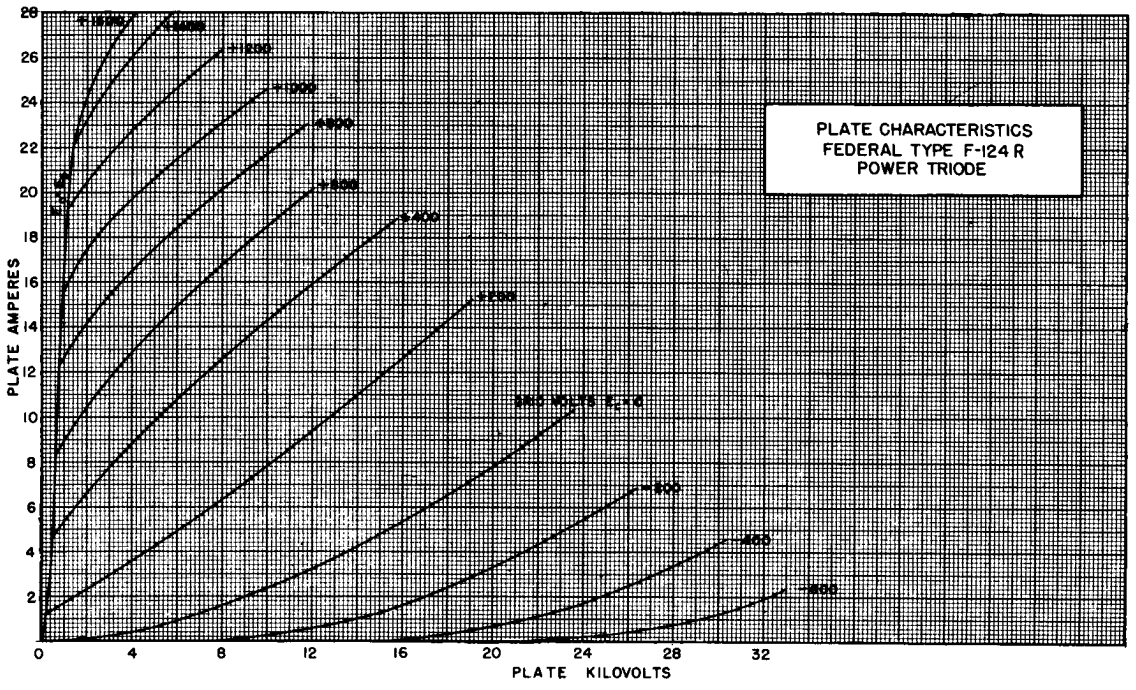

FEDERAL POWER TRIODE
Type F-124-R
20 Kilowatts Plate Dissipation

Over and over again, Federal *sales* tell the factual story of Federal's tube achievements and success in unusual applications.

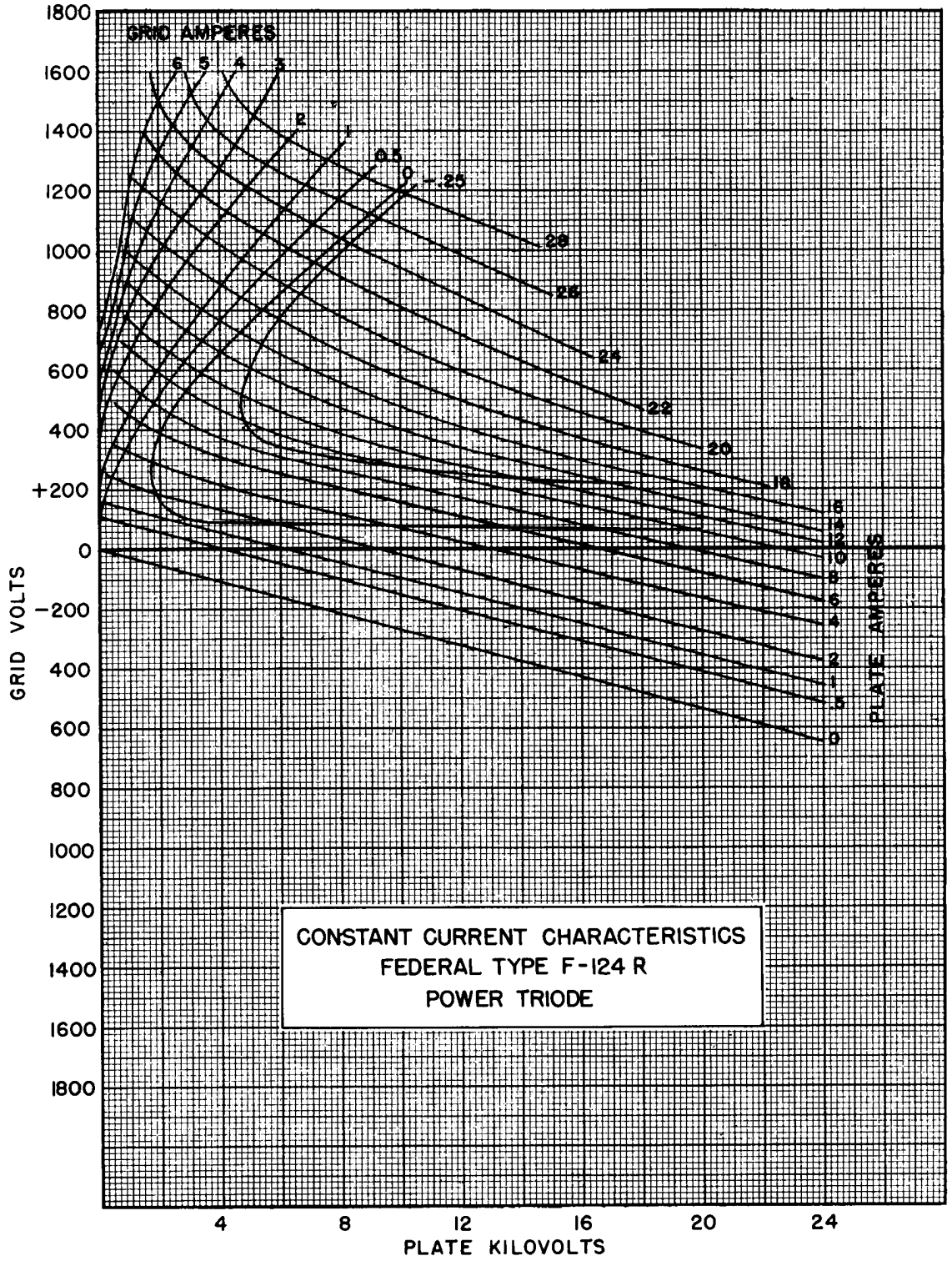

Federal means longer tube life, finer performance, greater satisfaction, greater stretch of your purchase dollar.

FEDERAL POWER TRIODE
Type F-124-R
20 Kilowatts Plate Dissipation

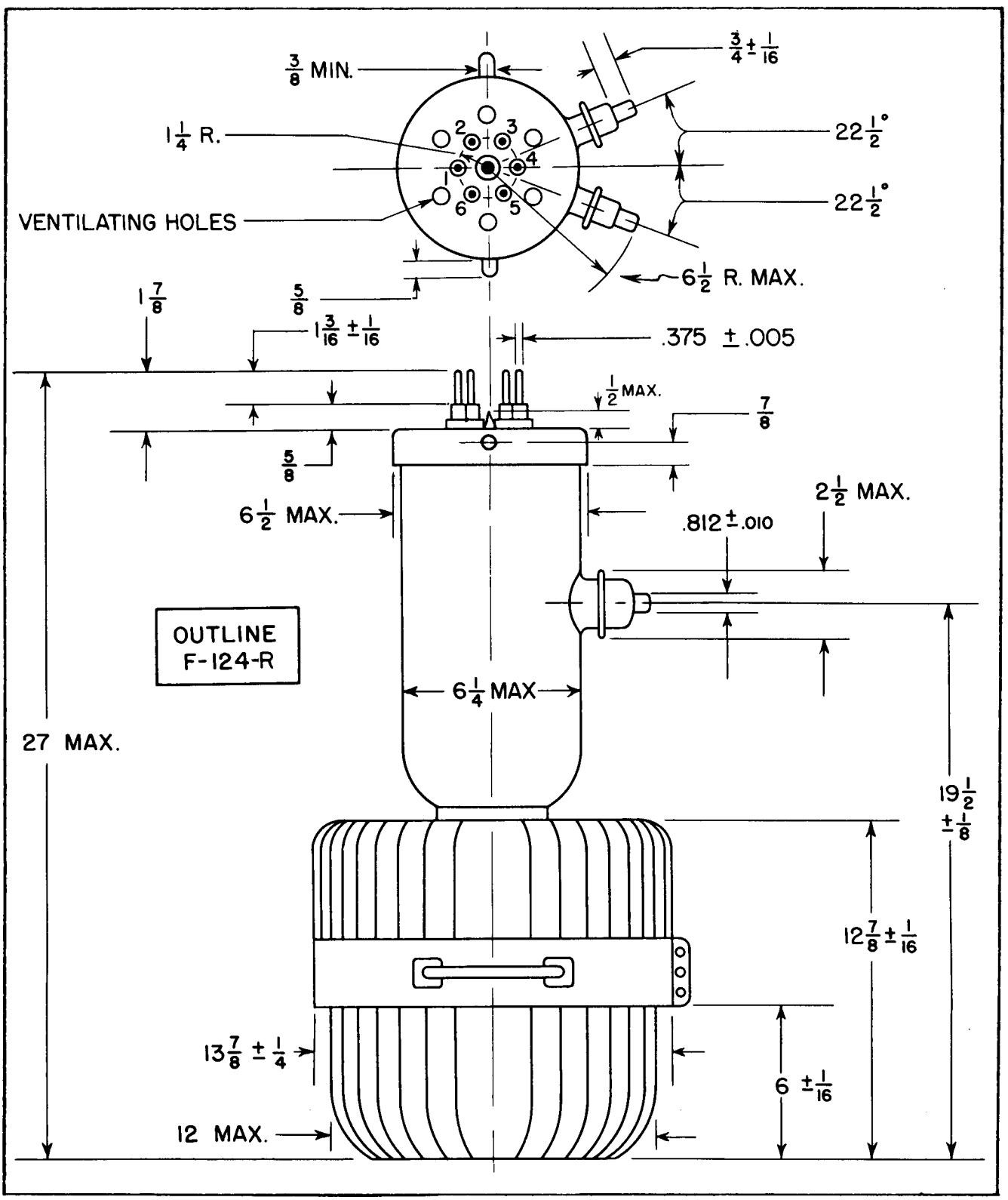

Federal Telephone and Radio Corporation
100 Kingsland Road Clifton, New Jersey

An IT&T Associate

There is an extra margin of performance in every Federal tube.

Form FJ-163 Printed in U. S. A.

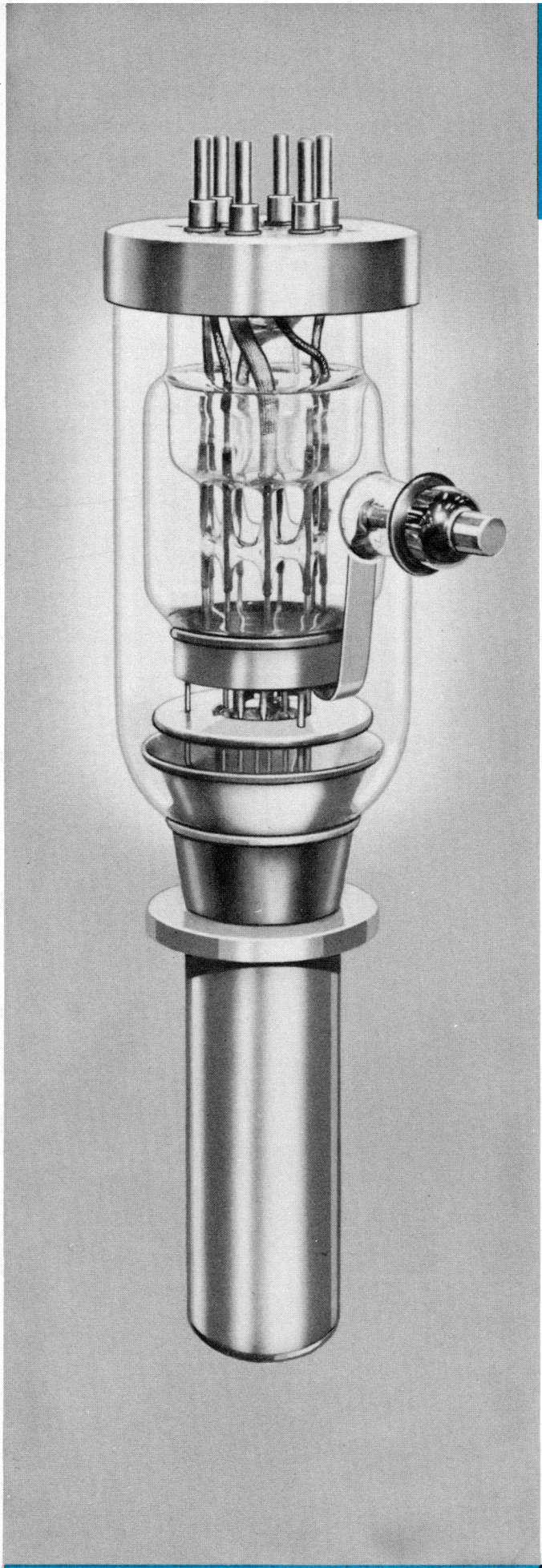

FEDERAL POWER TRIODE
Type F-125-A
40 Kilowatts Plate Dissipation

GENERAL DATA

DESCRIPTION:

The Type F-125-A by Federal is a three-electrode tube designed and engineered as a modulator. The electrical characteristics of this F-125-A make it especially suitable to Class AB modulator circuits. The anode is water-cooled, capable of dissipating 40 kilowatts. The cathode is a pure tungsten multi-strand filament which may be operated on DC, 1 Ø, 3 Ø, or 6 Ø AC excitation. Maximum ratings apply for audio-frequency use only.

Electrical:

Filament Voltage§	27.2 Volts
Filament Current§	196.5 Amperes
Filament Starting Current§	300 Amps. Max.
Filament Cold Resistance§	.015 Ohms
Amplification Factor, $E_c = -1600V$ $I_b = 3.0A$	4.75
Interelectrode Capacitances	
Grid-Plate	45 $\mu\mu$f
Grid-Filament	56 $\mu\mu$f
Plate-Filament	20 $\mu\mu$f

§Single phase excitation.

Mechanical:

Mounting Position— Vertical, anode down	
Type of Cooling—Water	
Water Flow on Anode	15 GPM Min.
Maximum Outgoing Water Temperature	70° C
Maximum Glass Temperature	150° C
Net Weight, approximate	11½ Pounds

Copyright 1954, Federal Telephone and Radio Company

FEDERAL POWER TRIODE
Type F-125-A
40 Kilowatts Plate Dissipation

Federal's F-125-A serves the nation's broadcast transmitters as modulator for the 124-A for which it was specifically designed. It has set a *standard* in the industry.

Maximum Ratings and Typical Operating Conditions

AUDIO-FREQUENCY POWER AMPLIFIER AND MODULATOR—CLASS AB1

Maximum Ratings, Absolute Values

DC Plate Voltage	15,000 Volts
Maximum Signal DC Plate Current†	10 Amperes
Maximum Signal Plate Input†	100 Kilowatts
Plate Dissipation†	40 Kilowatts

Typical Operation

(Unless otherwise specified, values are for two tubes)

DC Plate Voltage	10,000	12,000 Volts
DC Grid Voltage	—2,125	—2,600 Volts
Peak A-F Grid to Grid Voltage	4,220	5,160 Volts
Zero-Signal DC Plate Current	1.4	1.8 Amperes
Maximum Signal DC Plate Current	6.1	5.3 Amperes
Effective Load Resistance, Plate to Plate	3,100	5,000 Ohms
Maximum Signal Driving Power	0	0 Watts
Maximum Signal Power Output	40	40 Kilowatts

†Averaged over any audio frequency cycle of sine-wave form.

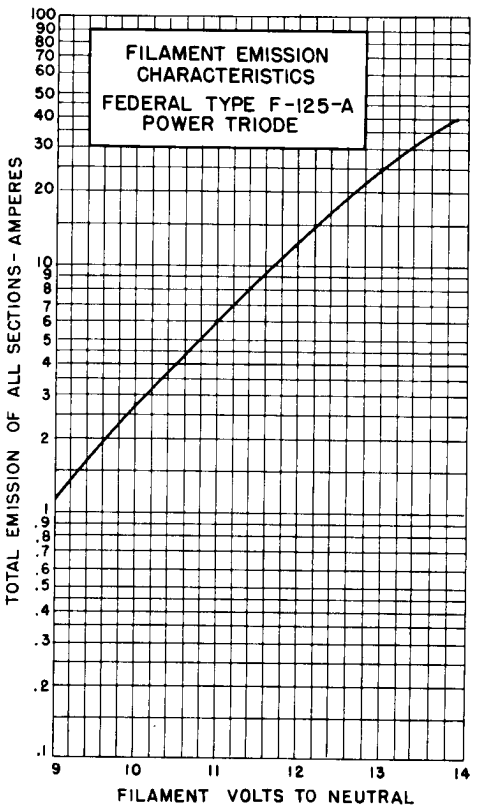

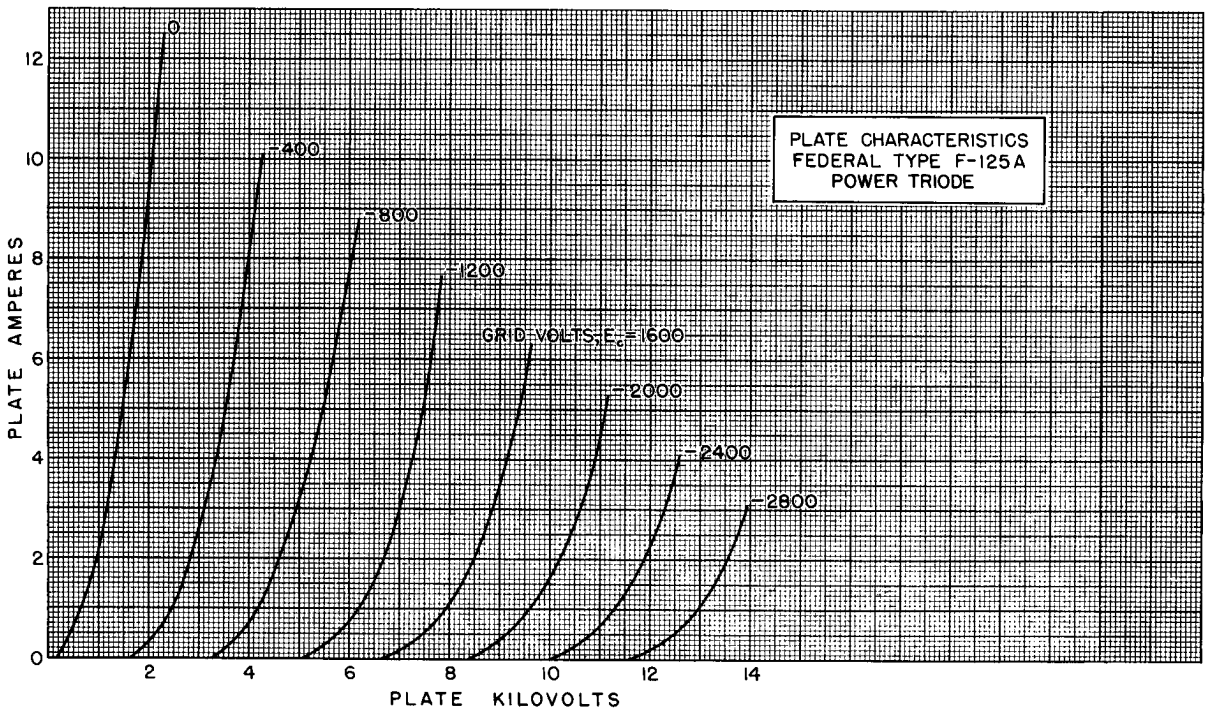

DIVISION OF I T&T

The low amplification factor in the F-125-A makes for easy attainment of high output in Class AB_1 modulators *without driving the grid positive.*

FEDERAL POWER TRIODE
Type F-125-A
40 Kilowatts Plate Dissipation

FIG. 1

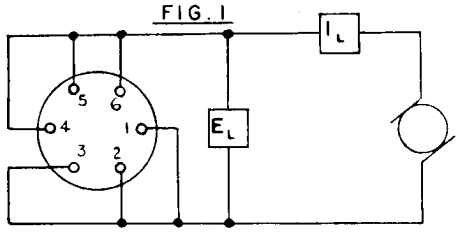

D.C. CONNECTION

E_L = 'X' VOLTS D.C.
I_L = 'Y' AMPS. D.C.

FIG. 2

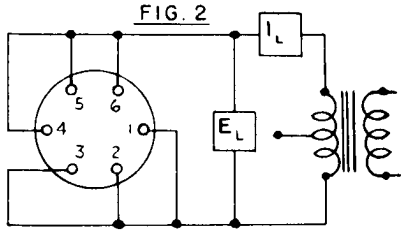

SINGLE-PHASE A.C. CONNECTION

E_L = 'X' VOLTS A.C.
I_L = 'Y' AMPS. A.C.

FIG. 3

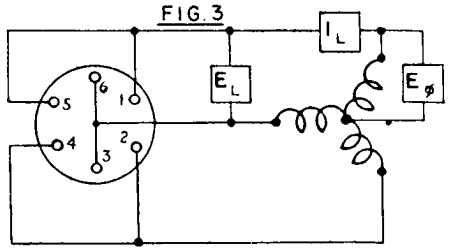

THREE-PHASE A.C. CONNECTION

E_L = 'X' VOLTS A.C.
I_L = 'Y' AMPS. A.C.
E_ϕ = 'Z' VOLTS A.C.

FIG. 4

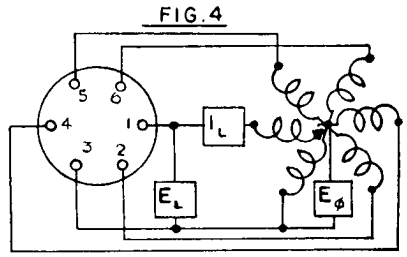

SIX-PHASE A.C. CONNECTION

E_L = 'X' VOLTS A.C.
I_L = 'Y' AMPS. A.C.
E_ϕ = 'Z' VOLTS A.C.

FIG. 5

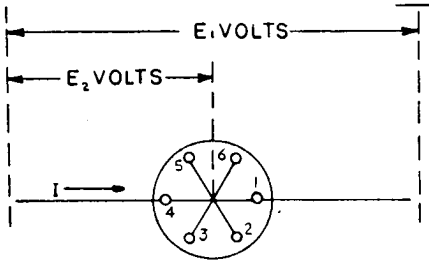

INTERNAL CONNECTION OF FILAMENTS

NUMBERS 1 TO 6 INCLUSIVE ON CONNECTIONS DENOTE BASE TERMINALS.

E_1 = 'U' VOLTS D.C. OR A.C. TERMINAL TO TERMINAL VOLTAGE.

E_2 = 'V' VOLTS D.C. OR A.C. VOLTAGE PER FILAMENT STRAND i.e. FROM TERMINAL TO COMMON TERMINAL CONNECTION.

I = 'W' AMPERES CURRENT PER FILAMENT TERMINAL.

FIG.	'U'	'V'	'W'	'X'	'Y'	'Z'
1				27.2	196.5	
2				27.2	196.5	
3				23.5	131.0	13.6
4				13.6	65.5	13.6
5	27.2	13.6	65.5			

MULTI-PHASE FILAMENT CONNECTIONS

DIVISION OF IT&T

FEDERAL POWER TRIODE
Type F-125-A
40 Kilowatts Plate Dissipation

For nearly four decades the name *Federal* has been synonymous with leadership in tube development, design, manufacture and performance.

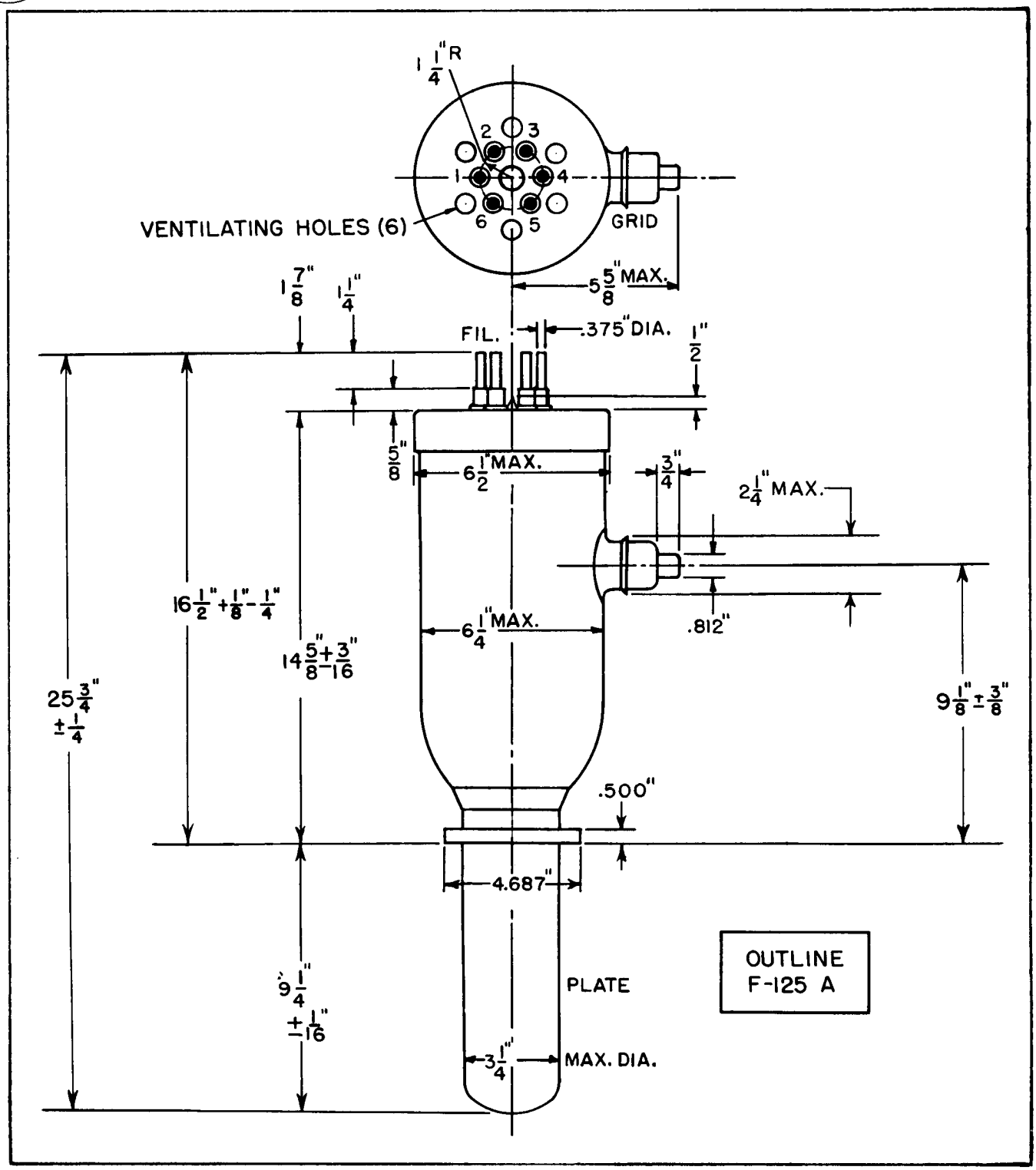

Form FJ-181 Printed in U. S. A.

DIVISION OF I T&T

Federal Telephone and Radio Company

100 Kingsland Road Clifton, New Jersey

ELECTRON TUBE DIVISION
P.O. Box 100
Easton, Pennsylvania 18042
Telephone 215 252-7331

CERAMIC HYDROGEN THYRATRON

DESCRIPTION

The F-126 is a hydrogen thyratron of ceramic metal construction designed for use in compact modulators of high performance radars and for missile applications. This electron tube features a hydrogen reservoir which is connected directly across the cathode heater.

The tube is a plug-in replacement for the 7621 hydrogen thyratron, and is recommended where long-life, high reliability performance is vital.

GENERAL CHARACTERISTICS

ELECTRICAL	Nom.	Min.	Max.	
Heater Voltage	6.3	5.8	6.8	Volts AC
Heater Current (at 6.3 volts)		2.5	4.0	Amperes
Minimum Heating Time		3		Minutes

MECHANICAL	
Mounting Position	Any
Dimensions	Per Outline
Cooling	See Note 6

MAXIMUM RATINGS

Max. Peak Anode Voltage, Forward	8	Kilovolts
Max. Peak Anode Voltage, Inverse (Note 1)	8	Kilovolts
Min. Anode Supply Voltage	0.3	Kilovolts DC
Max. Peak Anode Current	90	Amperes
Max. Average Anode Current	100	Milliamperes
Max. RMS Anode Current (Note 2)	2.0	Amperes AC

MAXIMUM RATINGS, Cont'd.

Max. ipy x ib x prr (Pb number)	2.7×10^9	
Max. Anode Current Rate of Rise	1000	Amps./usec.
Peak Trigger Voltage (Note 3)		
Max. Anode Delay Time (Note 4)	0.50	usec.
Max. Anode Delay Time Drift	0.15	usec.
Max. Time Jitter (Note 5)	.005	usec.
Ambient Temperature	-65° to +90°	C

NOTE 1: The peak inverse voltage should not exceed 2.5 KV during the first 25 microseconds after pulse.

NOTE 2: The root mean square anode current shall be computed as the square root of the product of the peak current and the average current.

NOTE 3: The driver pulse, measured at the tube socket with the thyratron grid disconnected, should have the following characteristics:

A.	Voltage	175-600 Volts
B.	Duration	1-2 Microseconds
C.	Impedance	1500 Ohms (max.)
D.	Time of Rise	0.5 Microsecond (max.)

The limits of anode time delay and anode time jitter are based on the minimum trigger. Using a fast rise trigger with the highest permissible trigger voltage and lowest trigger source impedance materially reduces these values below the limits specified.

NOTE 4: The time of anode delay is measured between the 26 percent point on the rising portion of the unloaded grid voltage pulse and the point at which evidence of anode conduction first appears on the loaded grid pulse.

NOTE 5: Time jitter is measured at the 50 percent point on the anode current pulse.

NOTE 6: It may be desirable to employ forced air cooling under conditions of high Pb number operations. A cooling air stream of 5 cfm may be directed into the anode cup.

Additional information for specific applications can be obtained from the Electron Tube Applications Section, ITT Electron Tube Division, P. O. Box 100, Easton, Pennsylvania 18042.

ELECTRON TUBE DIVISION ITT
Box 100, Easton, Pennsylvania 18042 Telephone (215) 252-7331

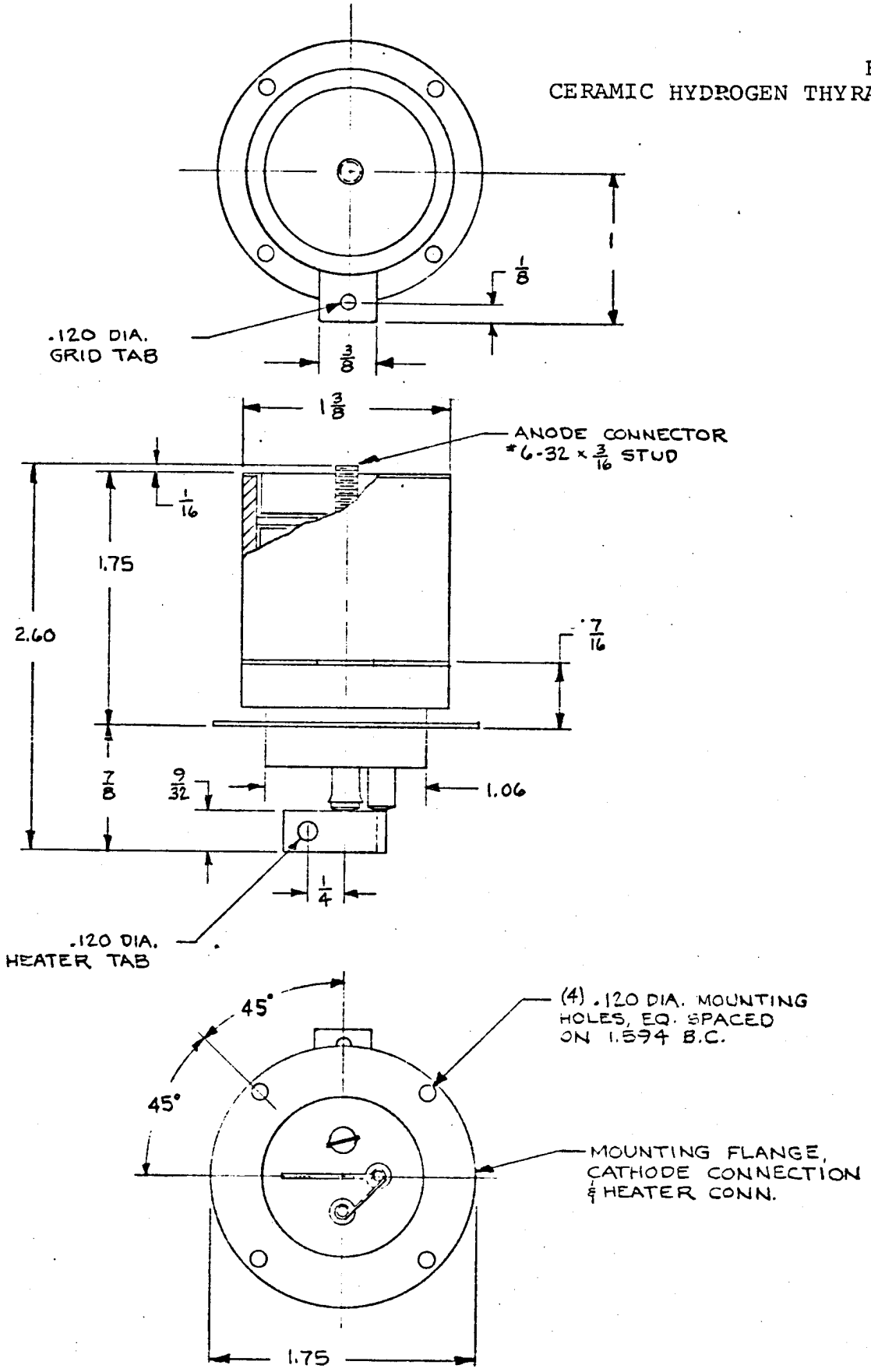

FIGURE 1 TYPE F-126 OUTLINE

FEDERAL POWER TRIODE
Type F-128-A
600 Watts Plate Dissipation

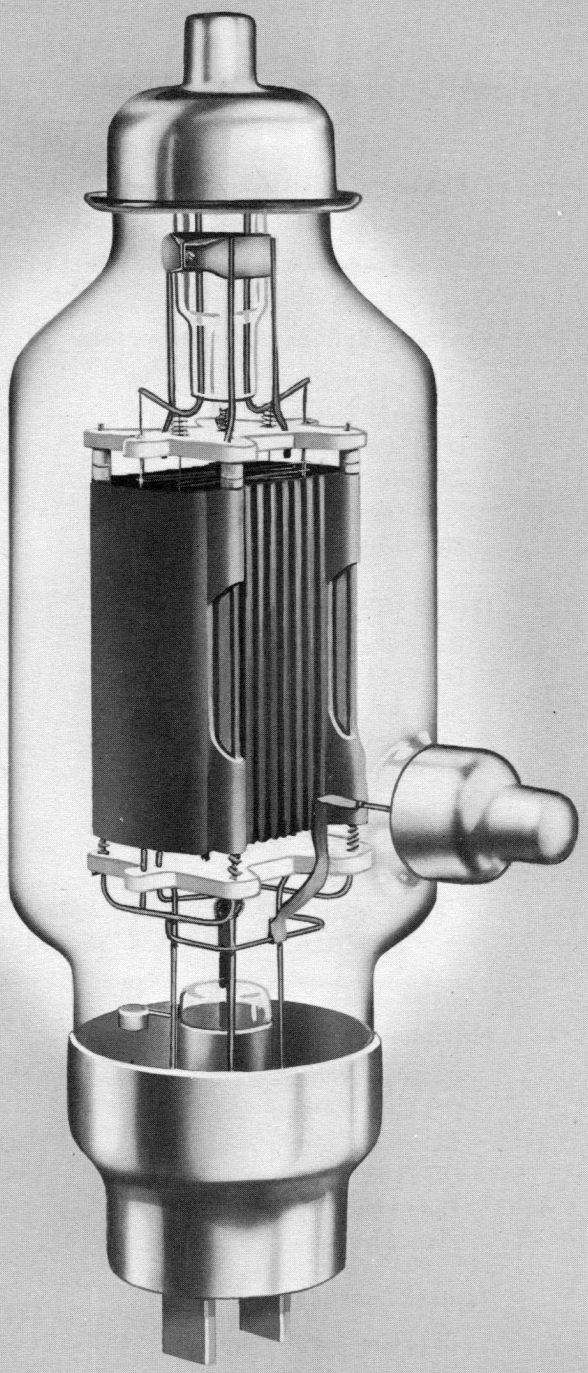

GENERAL DATA

DESCRIPTION:

Federal's F-128-A is a three-electrode tube designed for use as a modulator, R-F, amplifier, and oscillator. The anode, radiation-cooled, is capable of dissipating 600 watts. The cathode is a thoriated tungsten filament. Maximum ratings apply up to 30 megacycles.

Electrical:

▶ Filament Voltage	11 Volts
▶ Filament Current	13 Amperes
▶ Amplification Factor, at I_b=0.200 amps. E_b=2,800 volts	36
▶ Interelectrode Capacitances	
Grid-Plate	15.5 $\mu\mu$f
Grid-Filament	12.0 $\mu\mu$f
Plate-Filament	4.5 $\mu\mu$f

Mechanical:

▶ Mounting Position— Vertical, Base Down	
▶ Type of Cooling—Radiation	
▶ Net Weight, approximate	2 Pounds

Copyright 1953, Federal Telephone and Radio Company

FEDERAL POWER TRIODE
Type F-128-A
600 Watts Plate Dissipation

Federal's engineers are ready to consult with you on the application of Federal tubes to your designs. Write, phone or wire to arrange your conference date.

Maximum Ratings and Typical Operating Conditions

AUDIO-FREQUENCY POWER AMPLIFIER AND MODULATOR—CLASS B

Maximum Ratings, Absolute Values

DC Plate Voltage	3,500 Volts
Maximum Signal DC Plate Current†	0.600 Ampere
Maximum Signal Plate Input†	1.8 Kilowatts
Plate Dissipation†	600 Watts

†Averaged over any audio-frequency cycle of sine-wave form.

Typical Operation

(Unless otherwise specified, values are for two tubes)

DC Plate Voltage	3,000 Volts
DC Grid Voltage	—80 Volts
Peak A-F Grid Voltage	250 Volts
Zero Signal DC Plate Current	0.100 Ampere
Maximum Signal DC Plate Current	1.2 Amperes
Load Resistance, Plate to Plate	3,600 Ohms
Maximum Signal Driving Power, approx.	20 Watts
Maximum Signal Power Output, approx.	2.4 Kilowatts

RADIO-FREQUENCY POWER AMPLIFIER—CLASS B

(Carrier conditions per tube for use with a maximum modulation factor of 1.0)

Maximum Ratings, Absolute Values

DC Plate Voltage	3,500 Volts
DC Plate Current	0.5 Ampere
Plate Input	900 Watts
Plate Dissipation	600 Watts

Typical Operation

DC Plate Voltage	3,000 Volts
DC Grid Voltage	—85 Volts
Peak R-F Grid Voltage	117 Volts
DC Plate Current	0.292 Ampere
DC Grid Current, approx.	0 Ampere
Driving Power, approx.‡	6.3 Watts
Power Output, approx.	303 Watts

‡At crest of audio-frequency cycle with modulation factor of 1.0

PLATE-MODULATED RADIO-FREQUENCY POWER AMPLIFIER—CLASS C TELEPHONY

(Carrier conditions per tube for use with a maximum modulation factor of 1.0)

Maximum Ratings, Absolute Values

DC Plate Voltage	3,000 Volts
DC Grid Voltage	—600 Volts
DC Plate Current	0.700 Ampere
DC Grid Current	0.150 Ampere
Plate Input	1.8 Kilowatts
Plate Dissipation	600 Watts

Typical Operation

DC Plate Voltage	3,000 Volts
DC Grid Voltage	—300 Volts
Peak R-F Grid Voltage	500 Volts
DC Plate Current	0.511 Ampere
DC Grid Current, approx.	0.038 Ampere
Driving Power, Approx.	20 Watts
Power Output, approx.	1.15 Kilowatts

RADIO-FREQUENCY POWER AMPLIFIER AND OSCILLATOR—CLASS C TELEGRAPHY

(Key-down conditions per tube without amplitude modulation)¶

Maximum Ratings, Absolute Values

DC Plate Voltage	3,500 Volts
DC Grid Voltage	—600 Volts
DC Plate Current	1 Ampere
DC Grid Current	0.175 Amperes
Plate Input	3 Kilowatts
Plate Dissipation	700 Watts

Typical Operation

DC Plate Voltage	3,500 Volts
DC Grid Voltage	—400 Volts
Peak R-F Grid Voltage	680 Volts
DC Plate Current	0.854 Amperes
DC Grid Current, approx.	0.107 Ampere
Driving Power, approx.	70 Watts
Power Output, approx.	2.4 Kilowatts

¶Modulation essentially negative may be used if the positive peak of the envelope does not exceed 115 per cent of carrier conditions.

Federal's name on a tube signifies the best in design, engineering, materials, components and craftsmanship.

FEDERAL POWER TRIODE
Type F-128-A
600 Watts Plate Dissipation

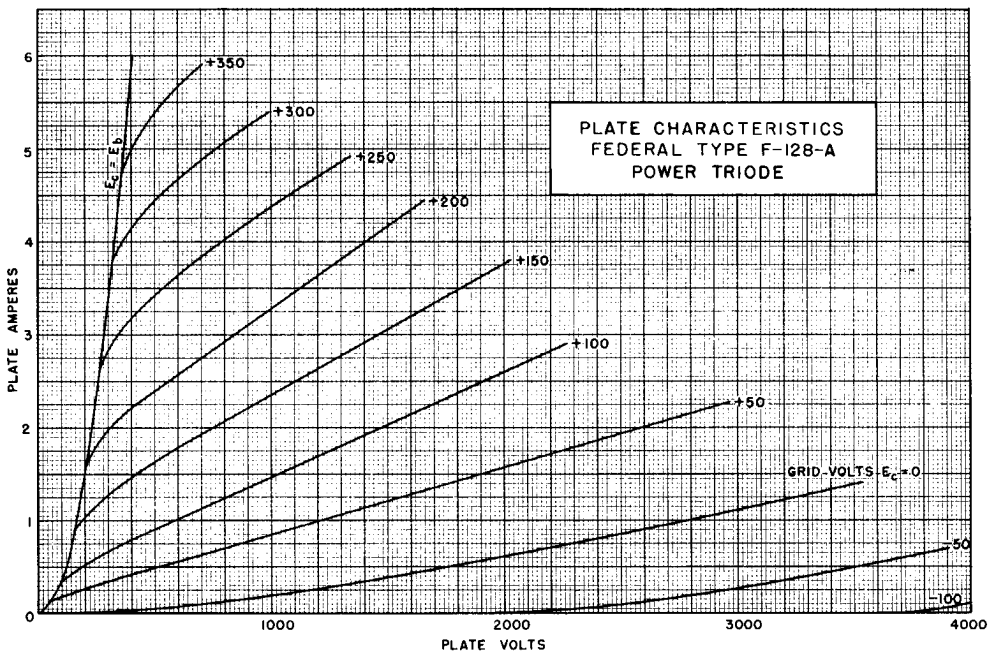

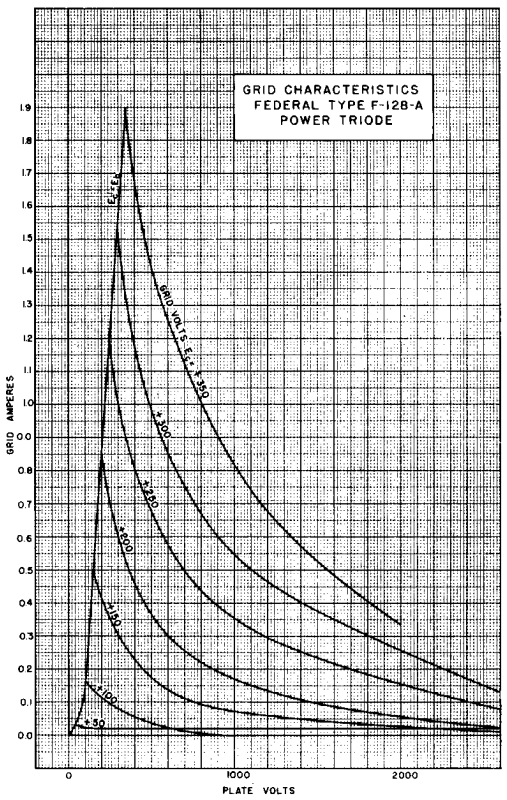

FEDERAL POWER TRIODE
Type F-128-A
600 Watts Plate Dissipatior

Federal's longer tube life means lower costs. Increase the life of the tubes in your equipment, and unit costs per hour go down.

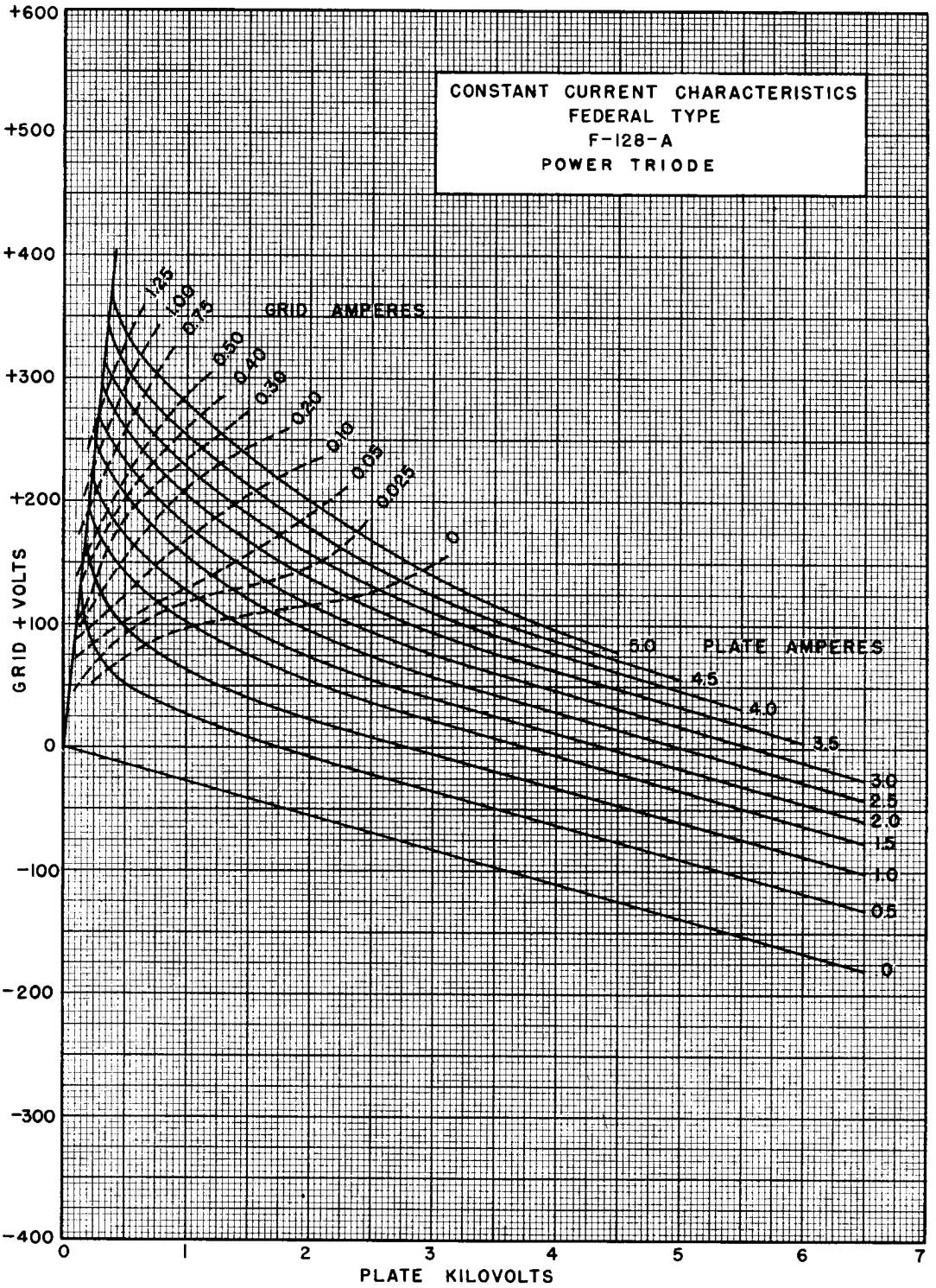

Federal produces tubes of only the highest quality, satisfying the most exacting users.

FEDERAL POWER TRIODE
Type F-128-A
600 Watts Plate Dissipation

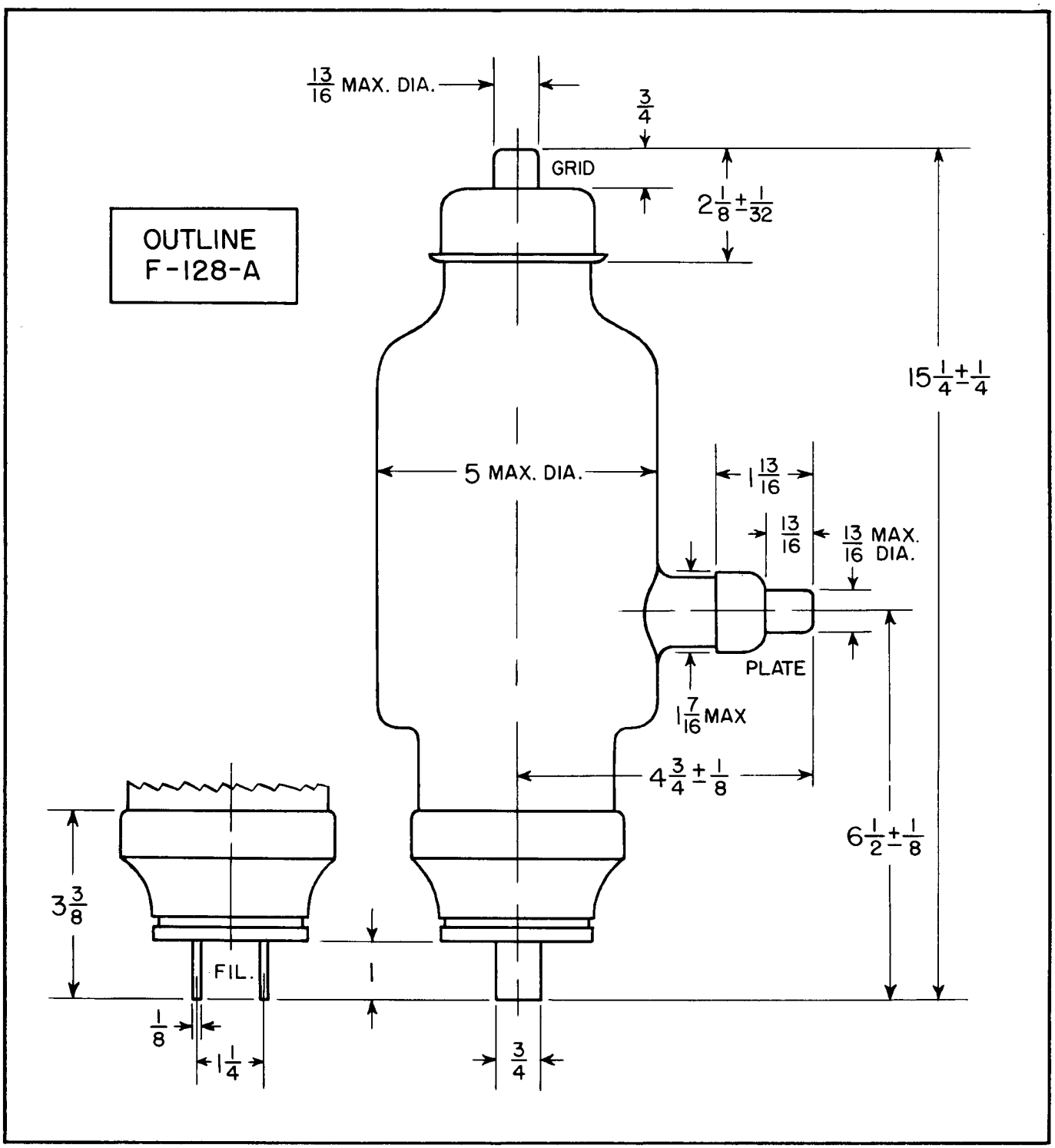

Federal Telephone and Radio Company
100 Kingsland Road VACUUM TUBE DEPARTMENT Clifton, New Jersey

Federal Always Has
Made Better Tubes

Form F-587 Printed in U. S. A.

FEDERAL POWER TRIODE
Type F-129-B
7.5 Kilowatts Plate Dissipation

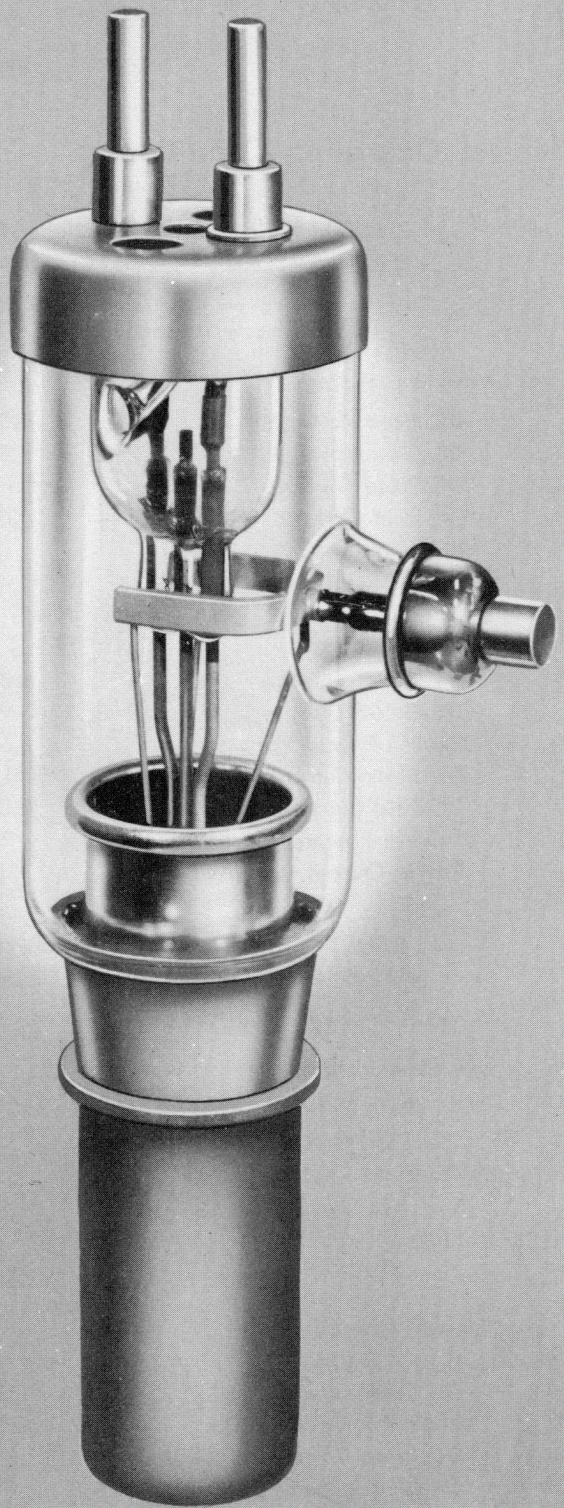

GENERAL DATA

DESCRIPTION:

Federal's F-129-B is a three-electrode tube designed for use as a radio-frequency power amplifier, oscillator, or Class B modulator. The anode, water cooled, is capable of dissipating 7.5 kilowatts. The cathode is a pure tungsten filament. Maximum ratings apply up to 30 megacycles.

Electrical:

▶ Filament Voltage	18 Volts
▶ Filament Current	58 Amperes
▶ Filament Starting Current	115 Amperes Max.
▶ Filament Cold Resistance	.024 Ohms
▶ Peak Cathode Current	9.5 Amperes
▶ Amplification Factor	
$I_b = 0.8$ Amp.; $E_c = -100$ Volts	26
▶ Interelectrode Capacitances	
Grid-Plate	12.0 $\mu\mu$f
Grid-Filament	12.7 $\mu\mu$f
Plate-Filament	1.8 $\mu\mu$f

Mechanical:

▶ Mounting Position—	
Vertical, Anode Down	
▶ Type of Cooling—Water	
Minimum Water Flow on Anode	5 GPM
Maximum Outgoing Water Temperature	70° C
Maximum Glass Temperature	150° C
▶ Net Weight, approximate	2 Pounds

Copyright 1952, Federal Telephone and Radio Corporation

FEDERAL POWER TRIODE
Type F-129-B
7.5 Kilowatts Plate Dissipation

Federal's F-129-B is operative at full ratings up to a frequency of 30 megacycles.

Maximum Ratings and Typical Operating Conditions

AUDIO-FREQUENCY POWER AMPLIFIER AND MODULATOR—CLASS B

Maximum Ratings

DC Plate Voltage	12,000 Volts
Max. Signal DC Plate Current†	2 Amperes
Max. Signal Plate Input†	16 Kilowatts
Plate Dissipation†	7.5 Kilowatts

Typical Operation

(Unless otherwise specified, values are for two tubes)

DC Plate Voltage	10,000 Volts
DC Grid Voltage	—350 Volts
Peak A-F Grid to Grid Voltage	700 Volts
Zero Signal DC Plate Current	0.3 Amperes
Maximum Signal DC Plate Current	1.15 Amperes
Effective Load Resistance (plate to plate)	20,000 Ohms
Maximum Signal Driving Power, approximate	100 Watts
Maximum Signal Power Output, approximate	8 Kilowatts

†Averaged over any audio-frequency cycle of sine-wave form.

RADIO-FREQUENCY POWER AMPLIFIER —CLASS B

(Carrier conditions per tube for use with a maximum modulation factor of 1.0)

Maximum Ratings

DC Plate Voltage	12,000 Volts
DC Plate Current	1 Ampere
Plate Input	10 Kilowatts
Plate Dissipation	7.5 Kilowatts

Typical Operation

DC Plate Voltage	10,000 Volts
DC Grid Voltage	—350 Volts
Peak R-F Grid Voltage	530 Volts
DC Plate Current	0.8 Amperes
Driving Power, approximate‡	80 Watts
Power Output, approximate	2.5 Kilowatts

‡At crest of audio-frequency cycle with modulation factor of 1.0.

PLATE-MODULATED RADIO-FREQUENCY POWER AMPLIFIER—CLASS C TELEPHONY

(Carrier conditions per tube for use with a maximum modulation factor of 1.0)

Maximum Ratings

DC Plate Voltage	10,000 Volts
DC Grid Voltage	—1,500 Volts
DC Plate Current	1 Ampere
DC Grid Current	0.25 Ampere
Plate Input	9 Kilowatts
Plate Dissipation	5 Kilowatts

Typical Operation

DC Plate Voltage	8,000 Volts
DC Grid Voltage	—920 Volts
Peak R-F Grid Voltage	1,500 Volts
DC Plate Current	0.82 Amperes
DC Grid Current, approximate	0.097 Amperes
Driving Power, approximate	140 Watts
Power Output, approximate	5.3 Kilowatts

RADIO-FREQUENCY POWER AMPLIFIER AND OSCILLATOR—CLASS C TELEGRAPHY

(Key-down conditions per tube without amplitude Modulation)¶

Maximum Ratings

DC Plate Voltage	12,000 Volts
DC Grid Voltage	—1,500 Volts
DC Plate Current	2 Amperes
DC Grid Current	0.25 Amperes
Plate Input	18 Kilowatts
Plate Dissipation	7.5 Kilowatts

Typical Operation

DC Plate Voltage	12,000 Volts
DC Grid Voltage	—1,300 Volts
Peak R-F Grid Voltage	2,200 Volts
DC Plate Current	1.42 Amperes
DC Grid Current, approximate	0.11 Amperes
Driving Power, approximate	230 Watts
Power Output, approximate	12 Kilowatts

¶Modulation essentially negative may be used if the positive peak of the envelope does not exceed 115 per cent of carrier conditions.

Precision craftsmanship was initiated by Federal in the earliest days of tube manufacture, and has been maintained ever since.

FEDERAL POWER TRIODE
Type F-129-B
7.5 Kilowatts Plate Dissipation

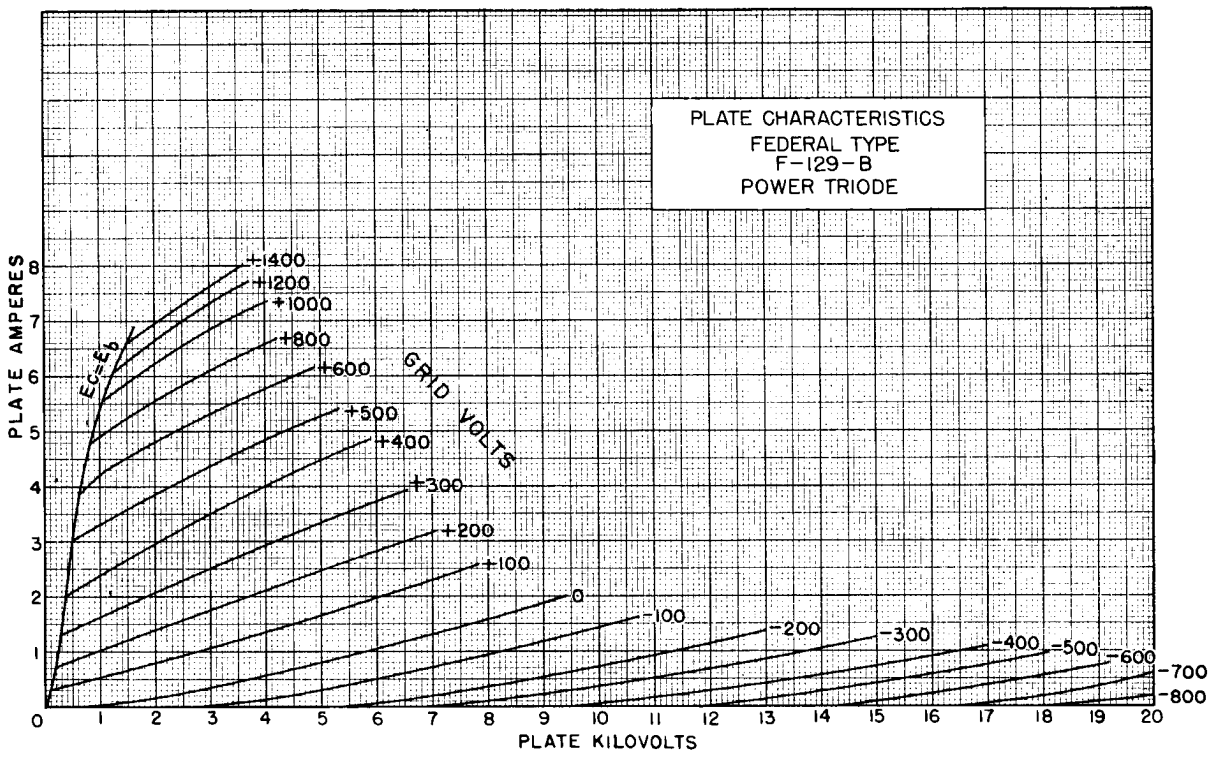

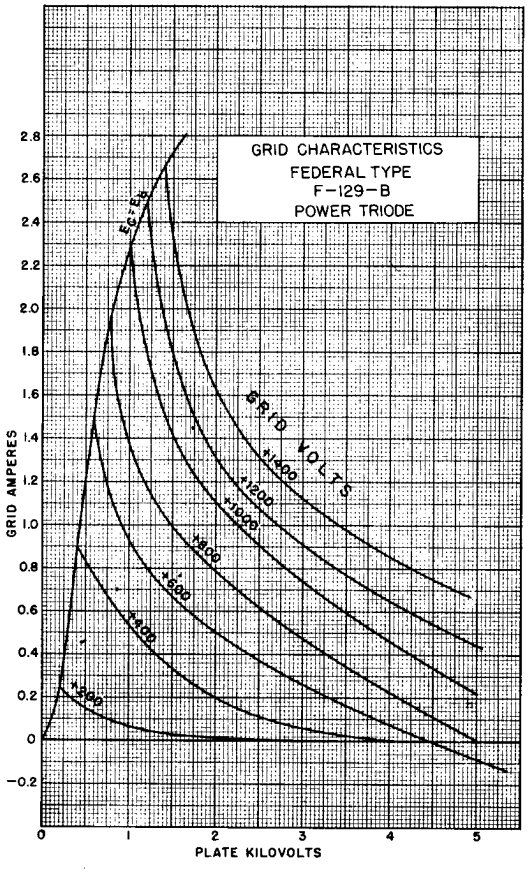

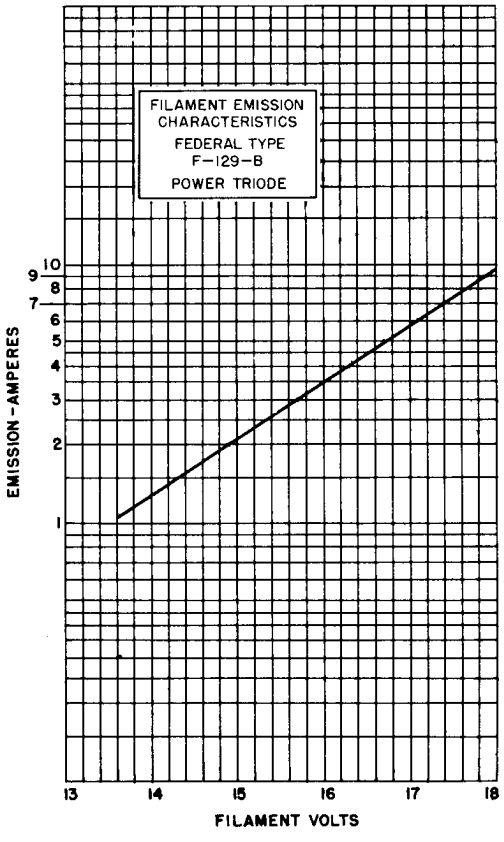

FEDERAL POWER TRIODE
Type F-129-B
7.5 Kilowatts Plate Dissipation

The development of new tubes for new applications always has been a Federal specialty. Why not tell us your needs?

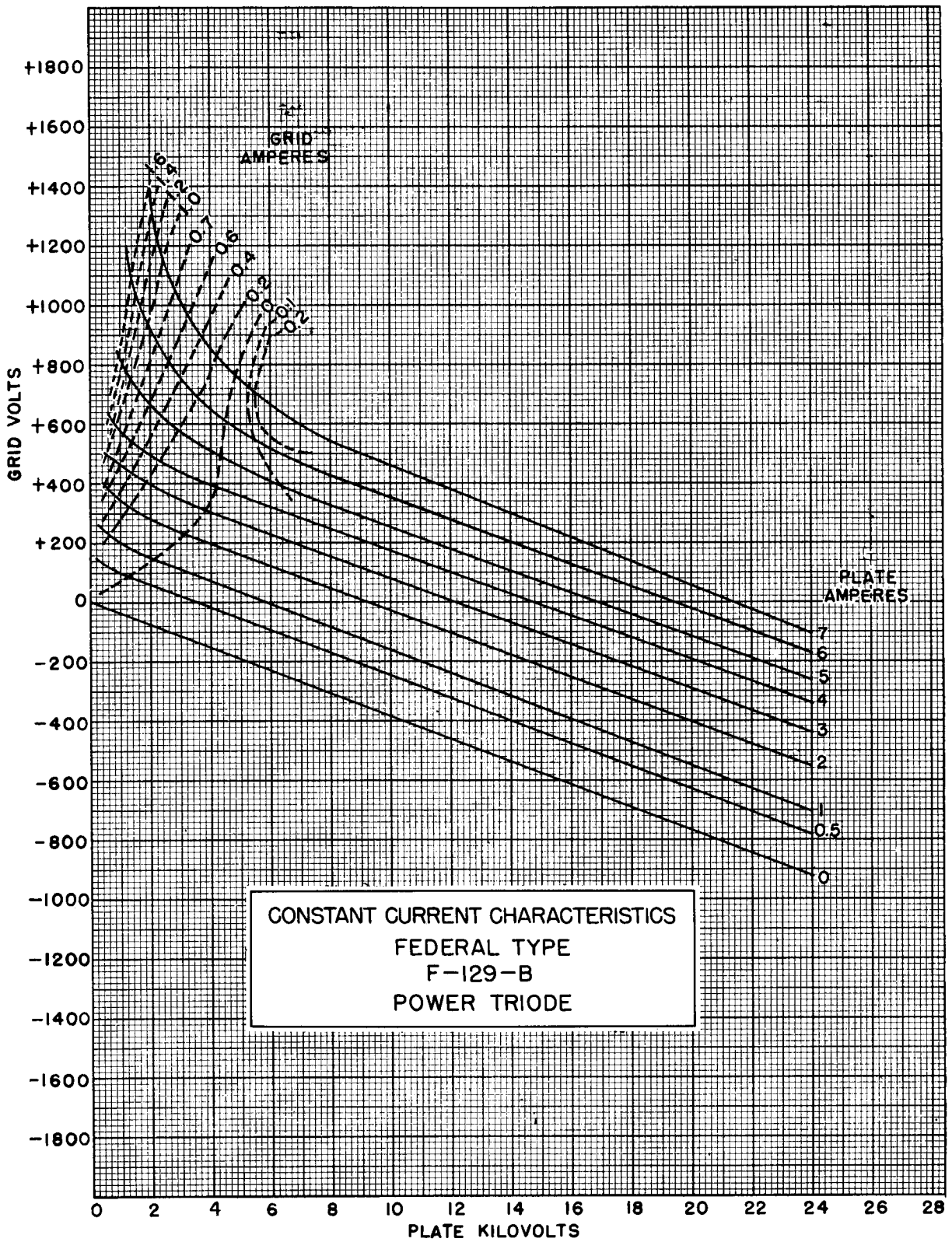

One reason why Federal tubes are trade-marked, is to show the craftsman's pride and Federal's satisfaction in work well done.

FEDERAL POWER TRIODE
Type F-129-B
7.5 Kilowatts Plate Dissipation

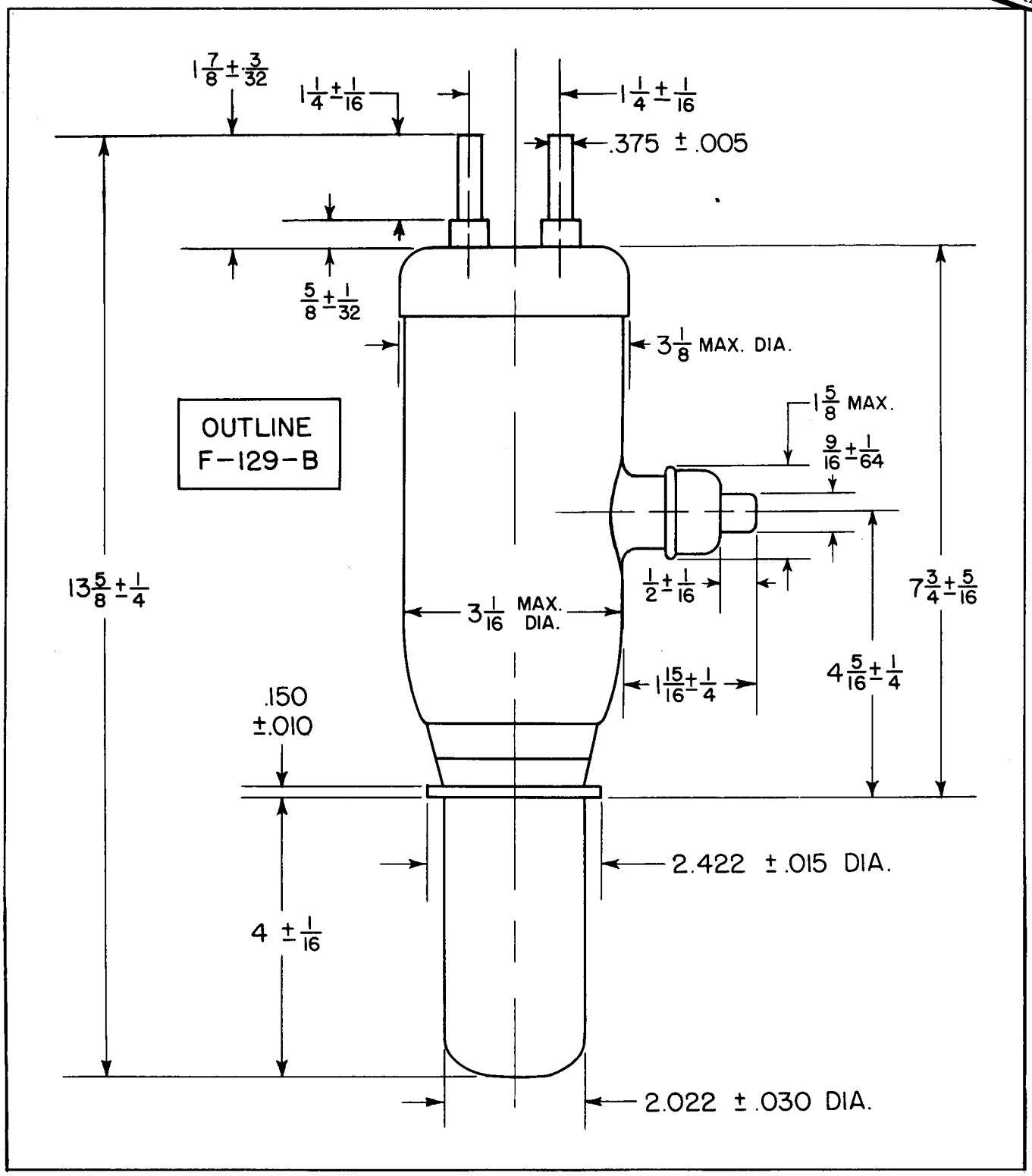

Federal Telephone and Radio Corporation
100 Kingsland Road Clifton, New Jersey

Federal Always Has
Made Better Tubes

Form FJ-176 Printed in U. S. A.

FEDERAL POWER TRIODE
Type F-129-R
5 Kilowatts Plate Dissipation

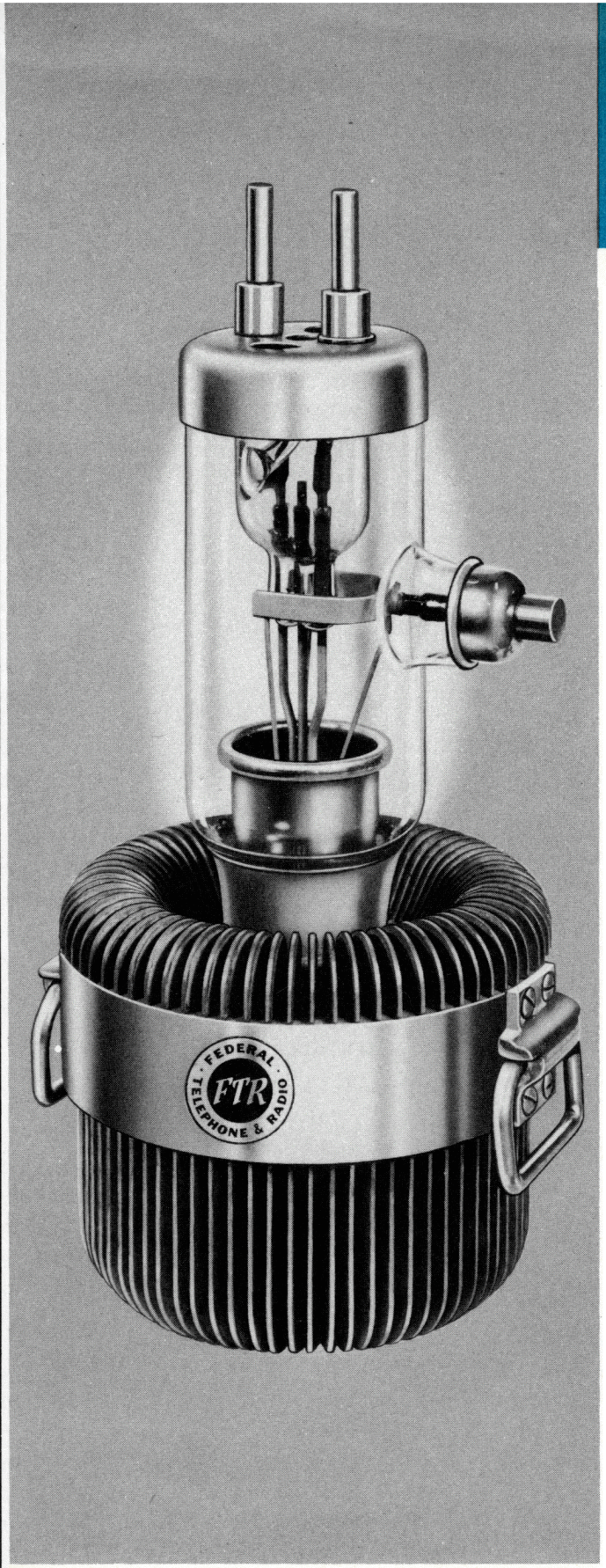

The longer life in Federal tubes means lower operating costs.

GENERAL DATA

DESCRIPTION:

The F-129-R by Federal is a three-electrode tube designed for use as a radio-frequency power amplifier, oscillator, or Class B modulator. The anode is forced-air-cooled, capable of dissipating 5 kilowatts. The cathode is a pure tungsten filament. Maximum ratings apply up to 30 megacycles.

Electrical:

Filament Voltage	18 Volts
Filament Current	58 Amperes
Filament Starting Current	115 Amperes Max.
Filament Cold Resistance	.024 Ohms
Peak Cathode Current	9.5 Amperes
Amplification Factor	
$I_b = 0.8$ Amp.; $E_c = -100$ Volts	26
Interelectrode Capacitances	
Grid-Plate	13.0 $\mu\mu$f
Grid-Filament	12.7 $\mu\mu$f
Plate-Filament	2.2 $\mu\mu$f

Mechanical:

- Mounting Position—Vertical, Anode Down
- Type of Cooling—Forced Air
  Maximum Incoming Air Temperature 45° C
- Required Air Flow on Anode

Plate Dissipation— Kilowatts	5	4	3
Air Flow—CFM	800	575	400
Static Pressure— Inches Water	2.5	1.3	0.62

Maximum Glass Temperature 150° C

- Net Weight, approx. 22 Pounds

Copyright 1949, Federal Telephone and Radio Corporation

FEDERAL POWER TRIODE
Type F-129-R
5 Kilowatts Plate Dissipation

In *satisfying* the customer and winning his confidence, Federal has reduced tube selling to a formula.

Maximum Ratings and Typical Operating Conditions

AUDIO-FREQUENCY POWER AMPLIFIER AND MODULATOR—CLASS B

Maximum Ratings

DC Plate Voltage	12,000 Volts
Maximum Signal DC Plate Current†	2 Amperes
Maximum Signal Plate Input†	16 Kilowatts
Plate Dissipation†	5 Kilowatts

Typical Operation

(Unless otherwise specified, values are for two tubes)

DC Plate Voltage	10,000 Volts
DC Grid Voltage	—350 Volts
Peak A-F Grid to Grid Voltage	700 Volts
Zero Signal DC Plate Current	0.3 Amperes
Maximum Signal DC Plate Current	1.15 Amperes
Effective Load Resistance, Plate to Plate	20,000 Ohms
Maximum Signal Driving Power, approximate	100 Watts
Maximum Signal Power Output, approximate	8 Kilowatts

†Averaged over any audio-frequency cycle of sine-wave form.

RADIO-FREQUENCY POWER AMPLIFIER —CLASS B TELEPHONY

(Carrier conditions per tube for use with a maximum modulation factor of 1.0)

Maximum Ratings

DC Plate Voltage	12,000 Volts
DC Plate Current	1 Ampere
Plate Input	7.5 Kilowatts
Plate Dissipation	5 Kilowatts

Typical Operation

DC Plate Voltage	10,000 Volts
DC Grid Voltage	—300 Volts
Peak R-F Grid Voltage	460 Volts
DC Plate Current	0.7 Amperes
Driving Power, approximate‡	90 Watts
Power Output, approximate	2.3 Kilowatts

‡At crest of audio-frequency cycle with modulation factor of 1.0.

PLATE-MODULATED RADIO-FREQUENCY POWER AMPLIFIER—CLASS C TELEPHONY

(Carrier conditions per tube for use with a maximum modulation factor of 1.0)

Maximum Ratings

DC Plate Voltage	10,000 Volts
DC Grid Voltage	—1,500 Volts
DC Plate Current	1 Ampere
DC Grid Current	0.25 Ampere
Plate Input	9 Kilowatts
Plate Dissipation	3 Kilowatts

Typical Operation

DC Plate Voltage	8,000 Volts
DC Grid Voltage	—920 Volts
Peak R-F Grid Voltage	1,500 Volts
DC Plate Current	0.82 Amperes
DC Grid Current, approximate	0.097 Amperes
Driving Power, approximate	140 Watts
Power Output, approximate	5.3 Kilowatts

RADIO-FREQUENCY POWER AMPLIFIER AND OSCILLATOR—CLASS C TELEGRAPHY

(Key-down conditions per tube without amplitude Modulation)¶

Maximum Ratings

DC Plate Voltage	12,000 Volts
DC Grid Voltage	—1,500 Volts
DC Plate Current	2 Amperes
DC Grid Current	0.25 Amperes
Plate Input	18 Kilowatts
Plate Dissipation	5 Kilowatts

Typical Operation

DC Plate Voltage	12,000 Volts
DC Grid Voltage	—1,300 Volts
Peak R-F Grid Voltage	2,200 Volts
DC Plate Current	1.42 Amperes
DC Grid Current, approximate	0.11 Amperes
Driving Power, approximate	230 Watts
Power Output, approximate	12 Kilowatts

¶Modulation essentially negative may be used if the positive peak of the envelope does not exceed 115 per cent of carrier conditions.

AN IT&T ASSOCIATE

Federal's longer tube life means lower costs. Increase the life of the tubes in your equipment, and unit costs per hour go down.

FEDERAL POWER TRIODE
Type F-129-R
5 Kilowatts Plate Dissipation

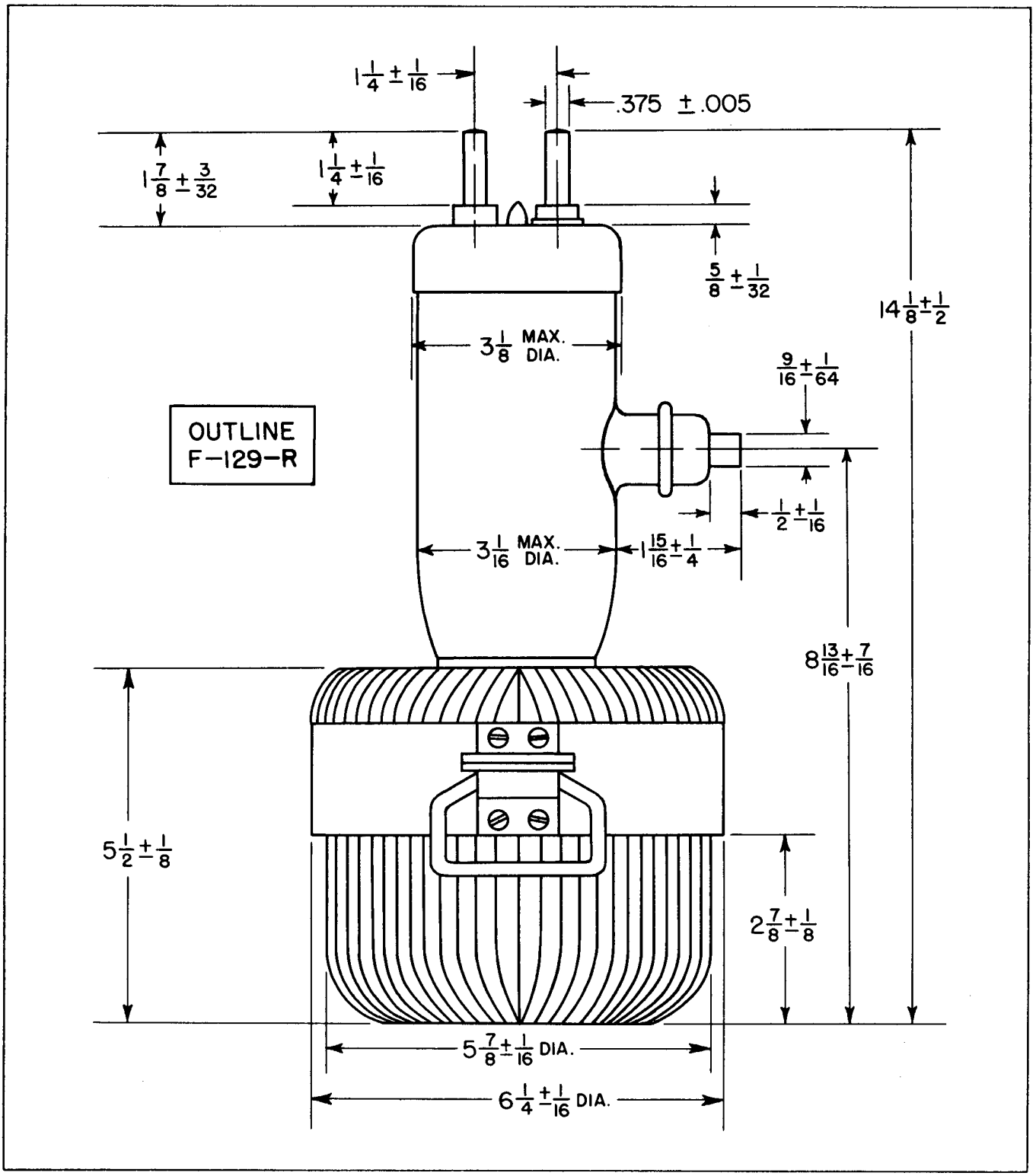

Federal Telephone and Radio Corporation
100 Kingsland Road Clifton, New Jersey

An IT&T Associate

Federal Always Has
Made Better Tubes

Form FJ-197 Printed in U. S. A.

FEDERAL POWER TRIODE
Type F-132-A
600 Watts Plate Dissipation

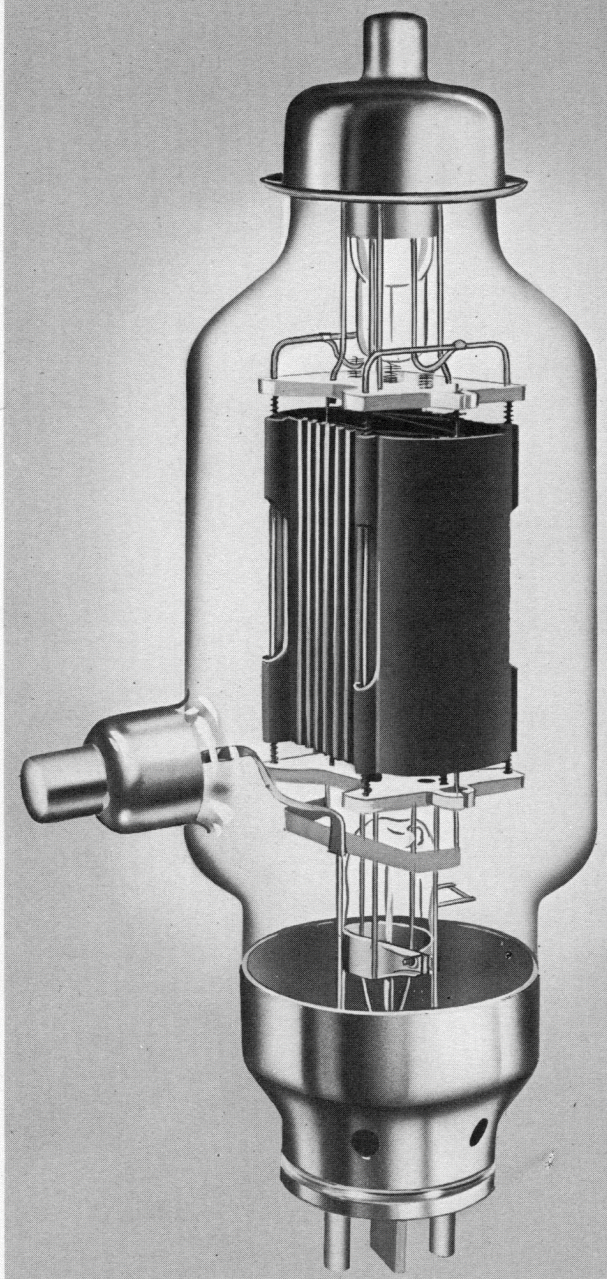

GENERAL DATA

DESCRIPTION:

Federal's F-132-A is a three electrode tube designed for use as a modulator. The anode, radiation-cooled, is capable of dissipating 600 watts. The cathode is a thoriated tungsten filament.

Electrical:

▸ Filament Voltage	11 Volts
▸ Filament Current	13 Amperes
▸ Amplification Factor, at I_b=0.200 amps. E_b=3,000 volts	10
▸ Interelectrode Capacitances	
Grid-Plate	15.0 $\mu\mu$f
Grid-Filament	12.0 $\mu\mu$f
Plate-Filament	5.5 $\mu\mu$f

Mechanical:

▸ Mounting Position— Vertical, Base Down	
▸ Type of Cooling—Radiation	
▸ Net Weight, approximate	2 Pounds

Copyright 1954, Federal Telephone and Radio Company

FEDERAL POWER TRIODE
Type F-132-A
600 Watts Plate Dissipation

In *satisfying* the customer and winning his confidence, Federal has reduced tube selling to a formula.

Maximum Ratings and Typical Operating Conditions

AUDIO-FREQUENCY POWER AMPLIFIER—CLASS A

Maximum Ratings, Absolute Values

DC Plate Voltage	3,500 Volts
Plate Dissipation	600 Watts

Typical Operation

As push-pull Class A driver for 2 Type F-125-A tubes.

(Unless otherwise specified, values are for two tubes)

DC Plate Voltage	3,500	2,700 Volts
DC Grid Voltage	—300	—225 Volts
Zero Signal Plate Current	0.308	0.300 Ampere
Maximum Signal Plate Current	0.317	0.307 Ampere
Peak Grid to Grid Signal Voltage	590	440 Volts
Peak Plate to Plate Output Voltage	5,700	4,000 Volts
Effective Plate to Plate Load Impedance	40,000	35,000 Ohms
Output Transformer turns ratio	1:1	1:1.3
Total Harmonic Distortion	2	1 Percent

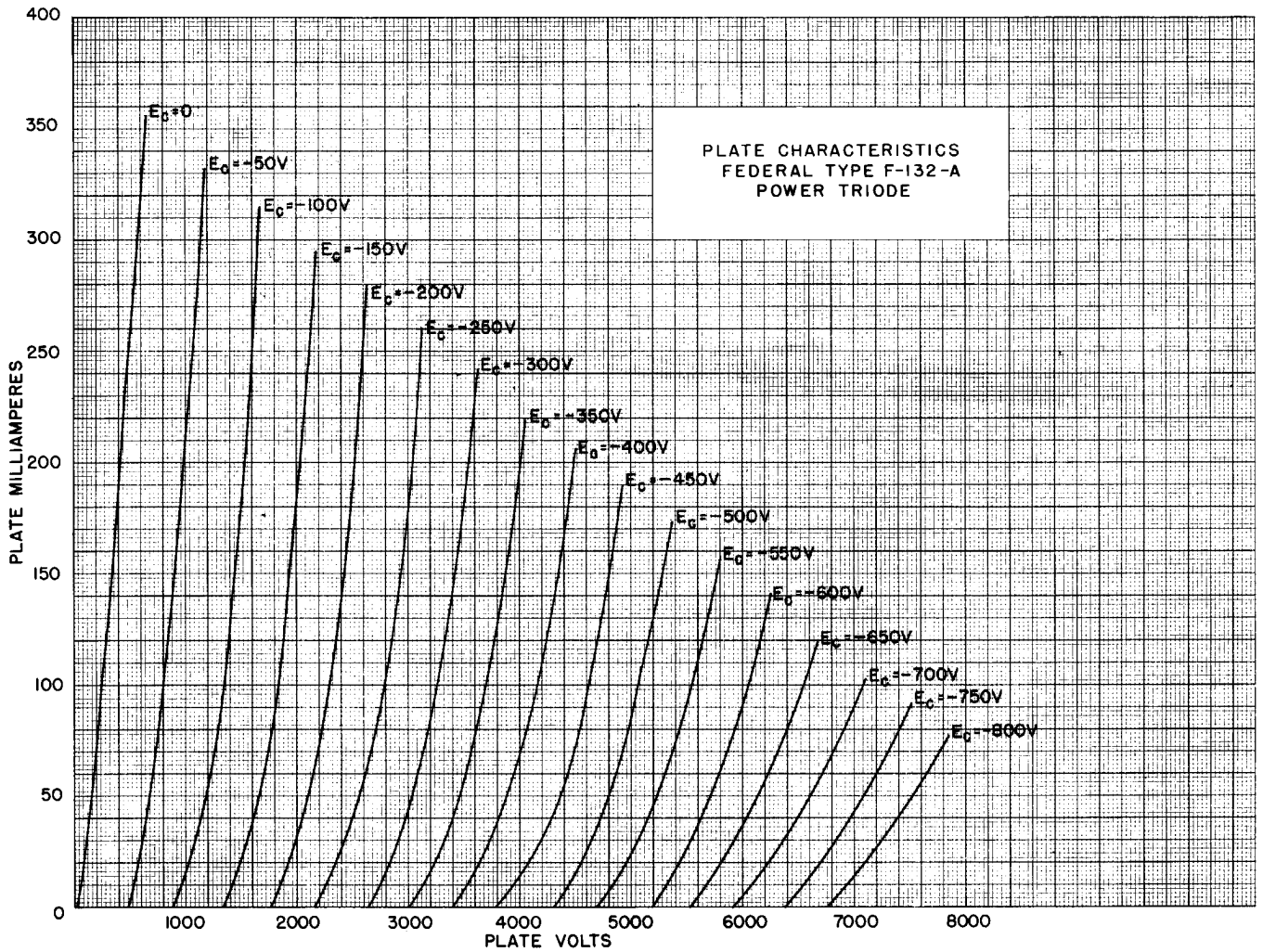

One reason why Federal tubes are trade-marked, is to show the craftsman's pride and Federal's satisfaction in work well done.

FEDERAL POWER TRIODE
Type F-132-A
600 Watts Plate Dissipation

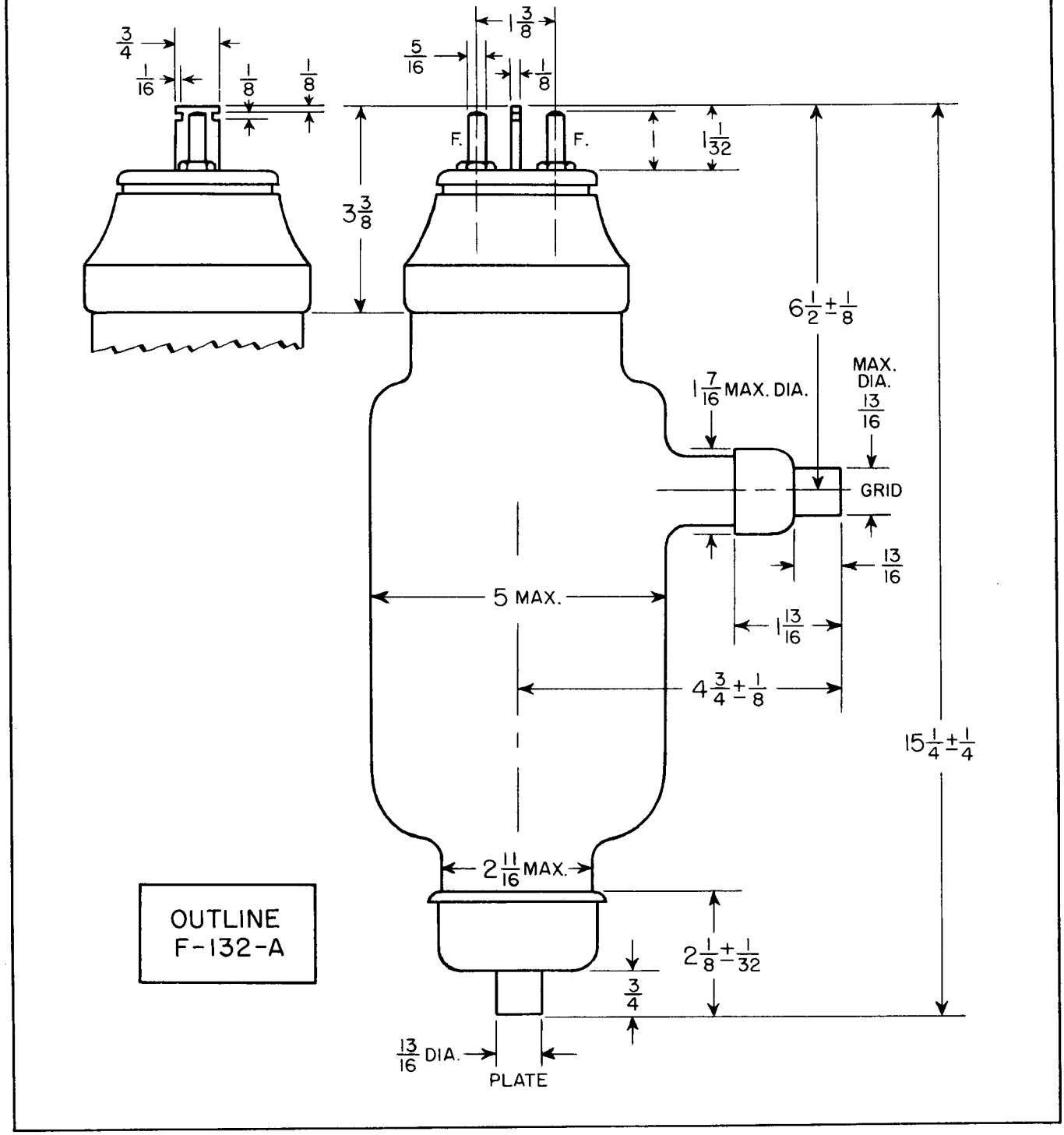

OUTLINE
F-132-A

Federal Telephone and Radio Company
100 Kingsland Road VACUUM TUBE DEPARTMENT Clifton, New Jersey

Federal Always Has
Made Better Tubes

Form F-588 Printed in U. S. A.

FEDERAL POWER TRIODE
Type F-134
150 Kilowatts Plate Dissipation

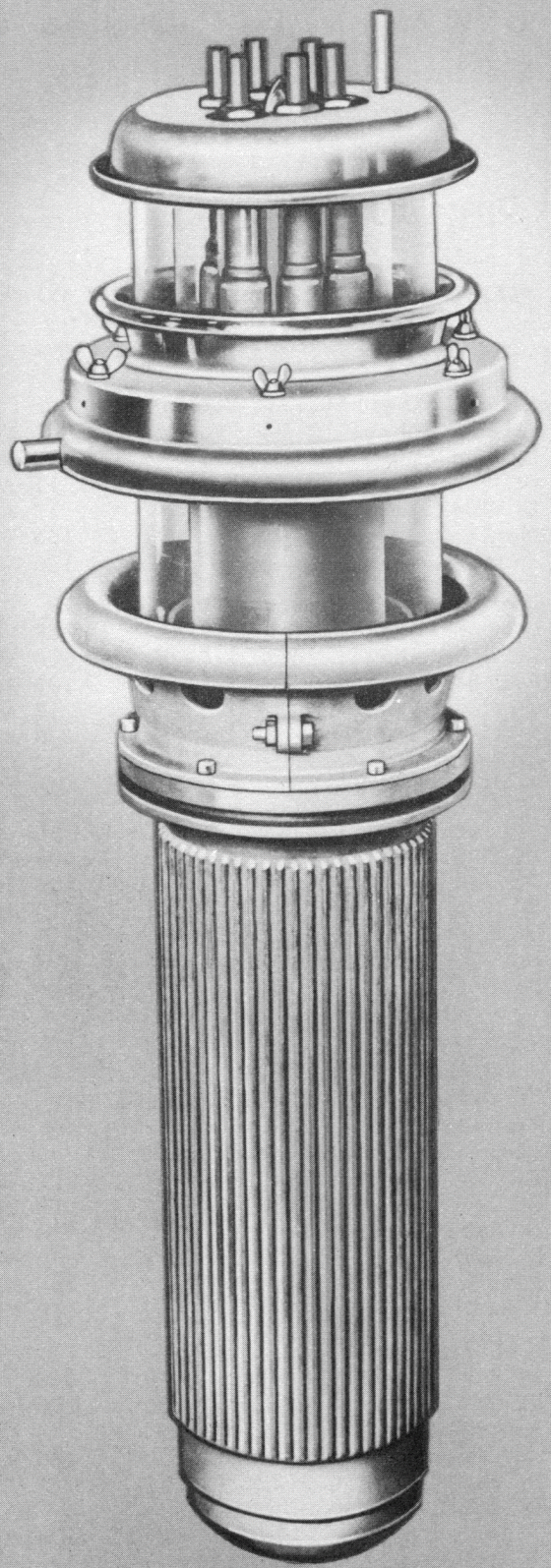

GENERAL DATA

DESCRIPTION:

Type F-134 is a three-electrode tube designed and manufactured by Federal for use as a radio-frequency amplifier, oscillator, or Class B modulator. The anode is water-cooled, capable of dissipating 150 Kilowatts. The cathode is a pure tungsten filament. Maximum ratings apply up to 22 megacycles.

Electrical:

Filament Voltage	25 Volts
Filament Current	650 Amperes
Filament Starting Current	1,000 Amperes max.
Filament Cold Resistance	.0022 Ohms
Peak Cathode Current	120 Amperes
Amplification Factor, at $E_c = -200V$ $I_b = 5A$	21
Interelectrode Capacitances	
Grid-Plate	105 $\mu\mu f$
Grid-Filament	140 $\mu\mu f$
Plate-Filament	4 $\mu\mu f$

Mechanical:

Mounting Position—Vertical, anode down	
Type of Cooling—Water and Forced Air (1)	
Minimum Water Flow on Anode	40 GPM.
Maximum Outgoing Water Temperature	70° C
Air Flow	
To Grid Air Ring (2)	80 CFM
To Filament Seals (3)	40 CFM
Maximum Glass Temperature	150° C
Net Weight, approx.	80 Pounds

(1) Water and air cooling should continue for 5 minutes after removal of power.

(2) Air pressure of 6 psi required to deliver 80 CFM at 14.7 psi and 20° C.

(3) Air pressure of 0.25 psi at entrance of 9-foot length of ⅜-inch I.D. hose to deliver 40 CFM at 14.7 psi and 20° C.

Copyright 1950, Federal Telephone and Radio Corporation

FEDERAL POWER TRIODE
Type F-134
150 Kilowatts Plate Dissipation

Federal's F-134 has exhibited proven performance over a period of years in 200 KW high level modulated short-wave transmitters.

Maximum Ratings and Typical Operating Conditions

AUDIO-FREQUENCY POWER AMPLIFIER AND MODULATOR—CLASS B

Maximum Ratings, Absolute Values

DC Plate Voltage	20,000 Volts
Maximum Signal DC Plate Current†	24 Amps.
Maximum Signal Plate Input†	400 KW
Plate Dissipation†	150 KW

Typical Operation

(Unless otherwise specified, values are for two tubes)

DC Plate Voltage	12,000	14,000	14,000	Volts
DC Grid Voltage	—500	—600	—600	Volts
Peak A-F Grid-to-Grid Voltage	1,920	1,960	3,100	Volts
Zero Signal DC Plate Current	4.0	4.0	4.0	Amps.
Maximum Signal DC Plate Current	22	17.2	41	Amps.
Effective Load Resistance, Plate to Plate	2,600	4,300	680	Ohms
Max. Signal Driving Power, approx.	540	500	3,400	Watts
Max. Signal Power Output, approx.	155	155	355	KW

†Averaged over any audio-frequency cycle of sine-wave form.

RADIO-FREQUENCY POWER AMPLIFIER—CLASS B

(Carrier conditions per tube for use with a maximum modulation factor of 1.0)

Maximum Ratings, Absolute Values

DC Plate Voltage	20,000 Volts
DC Plate Current	12 Amps.
Plate Input	200 KW
Plate Dissipation	150 KW

Typical Operation

DC Plate Voltage	18,000 Volts
DC Grid Voltage	—600 Volts
Peak R-F Grid Voltage	1370 Volts
DC Plate Current	9.6 Amps.
DC Grid Current, approx.	0.0 Amps.
Driving Power, approx.‡	1.2 KW
Power Output, approx.	54 KW

‡At crest of audio-frequency cycle with modulation factor of 1.0.

PLATE-MODULATED RADIO-FREQUENCY POWER AMPLIFIER—CLASS C TELEPHONY

(Carrier conditions per tube for use with a maximum modulation factor of 1.0)

Maximum Ratings, Absolute Values

DC Plate Voltage	14,000 Volts
DC Grid Voltage	—4,000 Volts
DC Plate Current	12 Amps.
DC Grid Current	2 Amps.
Plate Input	165 KW
Plate Dissipation	100 KW

Typical Operation, Grounded Filament Circuit

DC Plate Voltage	14,000	14,000	Volts
DC Grid Voltage	—1,600	—1,600	Volts
Peak R-F Grid Voltage	2,340	2,500	Volts
DC Plate Current	9.8	11.8	Amps.
DC Grid Current, approx.	0.6	1.0	Amps.
Driving Power, approx.	1.4	3.0	KW
Power Output, approx.	108	126	KW

Typical Operation, Grounded Grid Circuit

DC Plate Voltage	12,000 Volts
DC Grid Voltage	—1,400 Volts
DC Plate Current	10 Amps.
DC Grid Current, approx.	1.0 Amp.
Driving Power, approx.*	17.5 KW
Power Output**	105 KW

*The carrier of the driver modulated 100 per cent.
**Includes power transferred from driver stage.

RADIO-FREQUENCY POWER AMPLIFIER AND OSCILLATOR—CLASS C TELEGRAPHY

(Key-down conditions per tube without amplitude modulation)¶

Maximum Ratings, Absolute Values

DC Plate Voltage	20,000 Volts
DC Grid Voltage	—4,000 Volts
DC Plate Current	24 Amps.
DC Grid Current	2 Amps.
Plate Input	450 KW
Plate Dissipation	150 KW

Typical Operation

DC Plate Voltage	18,000	19,000	19,000	Volts
DC Grid Voltage	—2,000	—2,200	—2,200	Volts
Peak R-F Grid Voltage	3,000	3,400	3,600	Volts
DC Plate Current	14.5	17.8	20.1	Amps.
DC Grid Current, approx.	1.0	1.1	1.8	Amps.
Driving Power, approx.	3	3.8	6	KW
Power Output, approx.	200	250	300	KW

¶Modulation essentially negative may be used if the positive peak of the envelope does not exceed 115 per cent of carrier conditions.

An IT&T Associate

Up to 300 KW of R-F power is available from a single F-134 tube—for use in industrial heating applications.

FEDERAL POWER TRIODE
Type F-134
150 Kilowatts Plate Dissipation

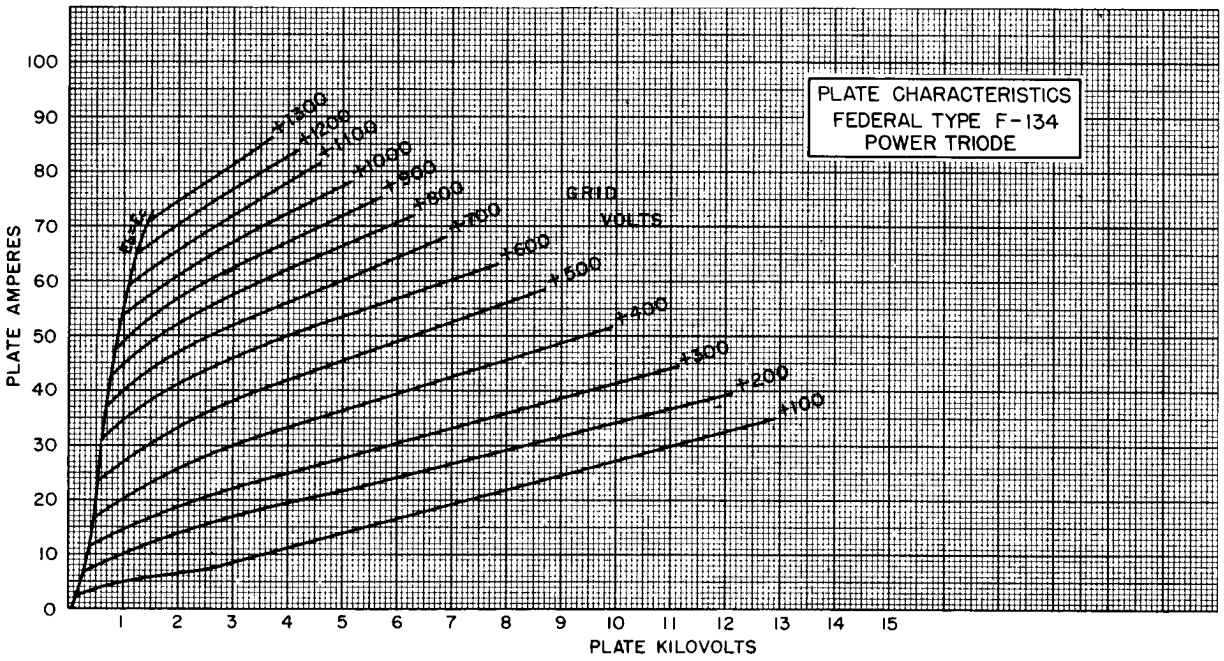

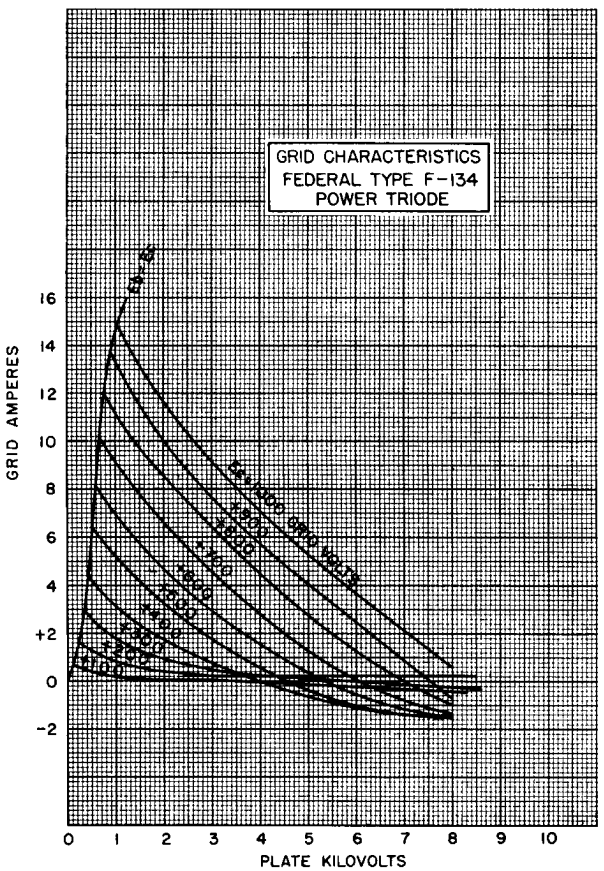

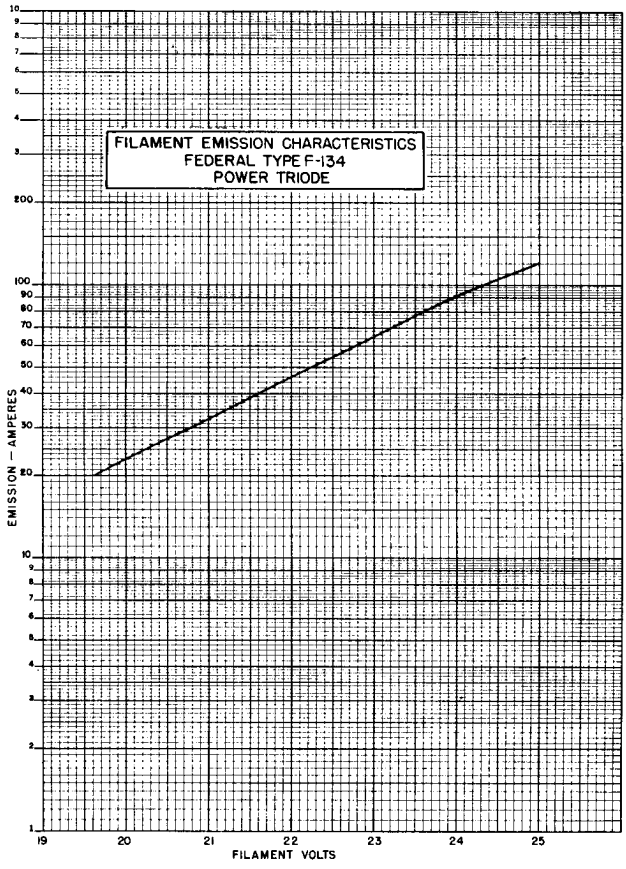

FEDERAL POWER TRIODE
Type F-134
150 Kilowatts Plate Dissipation

The ring seal grid connection in the F-134 provides a low inductance grid lead and adaptability to grounded grid circuits.

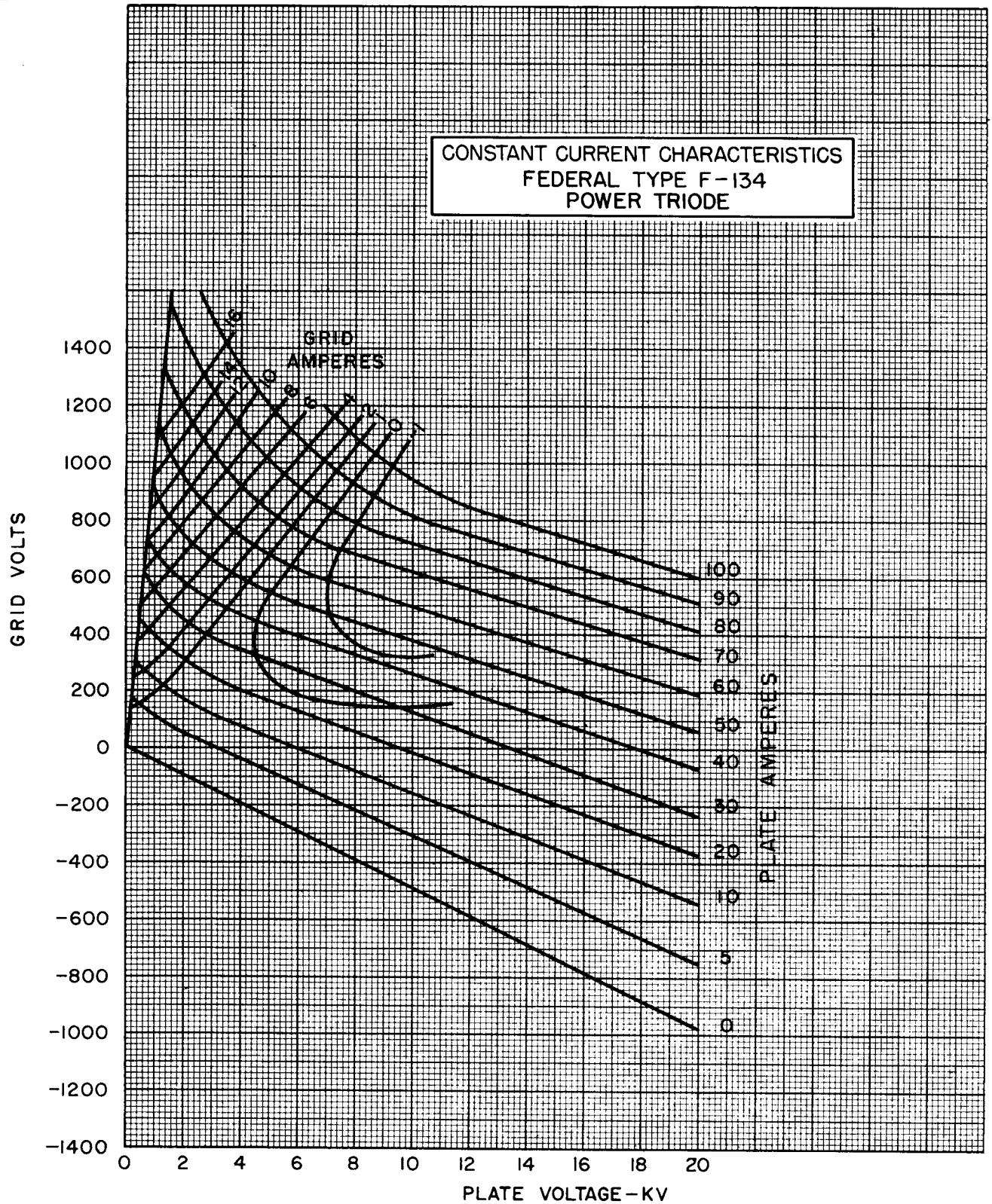

Federal tubes are produced under the most rigid standards of quality control. You can depend on Federal for top performance and long service life.

FEDERAL POWER TRIODE
Type F-134
150 Kilowatts Plate Dissipation

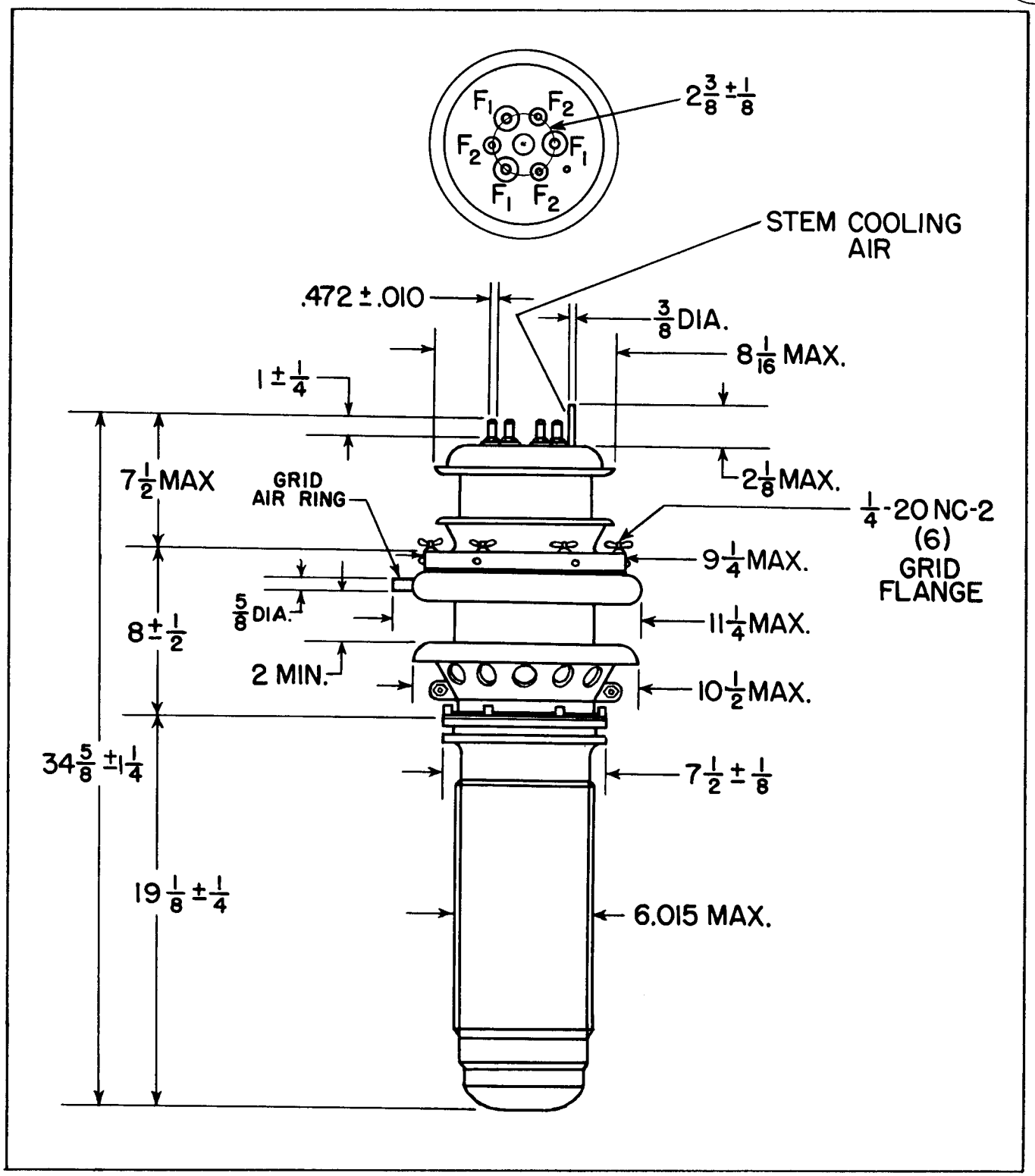

Federal Telephone and Radio Corporation
100 Kingsland Road Clifton, New Jersey
An IT&T Associate

Federal Always Has
Made Better Tubes

Printed in U. S.A.—Form FJ-329

FEDERAL POWER TRIODE
Type F-212-E
275 Watts Plate Dissipation

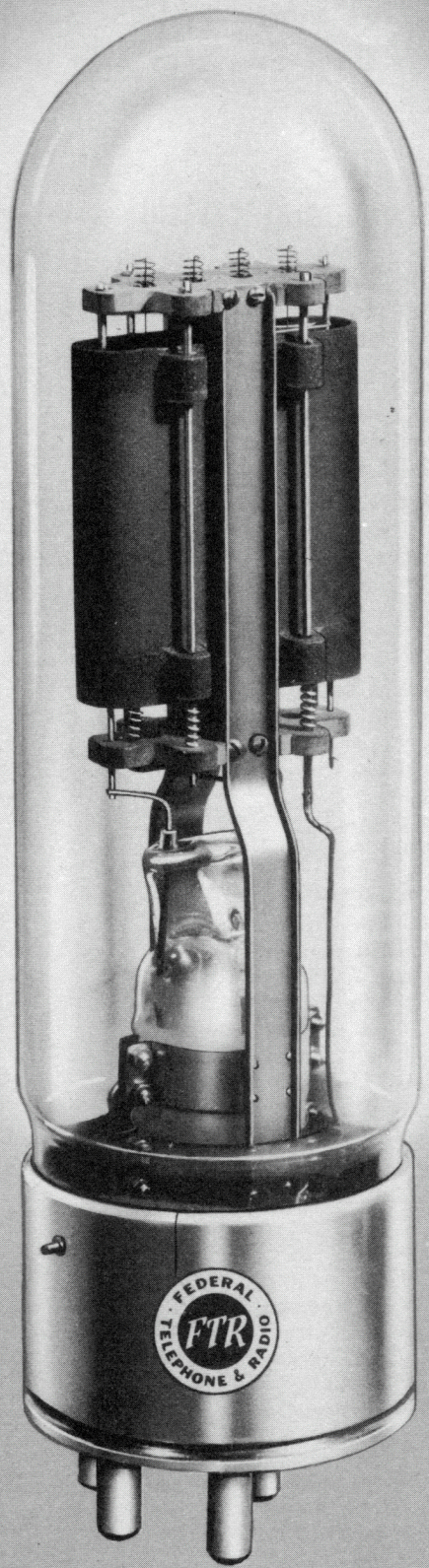

GENERAL DATA

DESCRIPTION:

Federal's F-212-E is a three-electrode tube designed for use as a modulator, R-F amplifier, and oscillator. The anode, radiation-cooled, is capable of dissipating 275 watts. The cathode is a thoriated tungsten filament. Maximum ratings apply up to 1.6 megacycles.

Electrical:

Filament Voltage	14 Volts
Filament Current	6 Amperes
Amplification Factor $I_b = 0.2$ Amp.; $E_b = 1500$ Volts	16
Interelectrode Capacitances	
Grid-Plate	19 $\mu\mu$f
Grid-Filament	14.5 $\mu\mu$f
Plate-Filament	8 $\mu\mu$f

Mechanical:

Mounting Position— Vertical, Base Down	
Type of Cooling—Radiation	
Net Weight, approximate	1 Pound

Each F-212-E vacuum tube falls within one of four impedance classes and is stamped accordingly. These classifications are numbered 1, 2, 3 and 4, and are in no way a gradation of quality, but are to facilitate parallel operation in the ordinary system using a common grid bias. Where more than one tube is used, those of the same or adjacent classes should be employed so the load may be evenly distributed. When a single tube only is used, no one of the classes has any advantage over another. Tubes may not be ordered according to impedance classification.

Copyright 1950, Federal Telephone and Radio Corporation

FEDERAL POWER TRIODE
Type F-212-E
275 Watts Plate Dissipation

Those who for the first time give Federal tubes a trial, usually come back for more. *Federal superiority shows itself over and over again.*

Maximum Ratings and Typical Operating Conditions

AUDIO-FREQUENCY POWER AMPLIFIER AND MODULATOR—CLASS A

Maximum Ratings, Absolute Values

DC Plate Voltage	2,000 Volts
Plate Input	275 Watts
Plate Dissipation	275 Watts

Typical Operation

DC Plate Voltage	2,000 Volts
DC Grid Voltage	—95 Volts
Peak A-F Grid Voltage	95 Volts
DC Plate Current	0.13 Amperes
Effective Load Resistance	8,000 Ohms
Distortion (% Second Harmonic)	4 Per Cent
Power Output, approximate	75 Watts

AUDIO-FREQUENCY POWER AMPLIFIER AND MODULATOR—CLASS B

Maximum Ratings, Absolute Values

DC Plate Voltage	2,000 Volts
Max. Signal DC Plate Current†	0.35 Amperes
Max. Signal Plate Input†	700 Watts
Plate Dissipation†	275 Watts

Typical Operation

(Unless otherwise specified, values are for two tubes)

DC Plate Voltage	2,000 Volts
DC Grid Voltage	—110 Volts
Peak A-F Grid Voltage	420 Volts
Zero Signal DC Plate Current	0.09 Amperes
Max. Signal DC Plate Current	0.60 Amperes
Load Resistance, Plate to Plate	7,600 Ohms
Max. Signal Driving Power, approx.	12 Watts
Max. Signal Power Output, approx.	840 Watts

†Averaged over any audio-frequency cycle of sine-wave form.

RADIO-FREQUENCY POWER AMPLIFIER—CLASS B

(Carrier conditions per tube for use with a maximum modulation factor of 1.0)

Maximum Ratings, Absolute Values

DC Plate Voltage	2,000 Volts
DC Plate Current	0.30 Amperes
Plate Input	400 Watts
Plate Dissipation	275 Watts

Typical Operation

DC Plate Voltage	1,600 Volts
DC Grid Voltage	—97 Volts
Peak R-F Grid Voltage	124 Volts
DC Plate Current	0.25 Amperes
DC Grid Current, approx.	0.003 Amperes
Driving Power, approx.‡	21 Watts
Power Output, approx.	137 Watts

‡At crest of audio-frequency cycle with modulation factor of 1.0.

PLATE-MODULATED RADIO-FREQUENCY POWER AMPLIFIER—CLASS C TELEPHONY

(Carrier conditions per tube for use with a maximum modulation factor of 1.0)

Maximum Ratings, Absolute Values

DC Plate Voltage	1,500 Volts
DC Grid Voltage	—500 Volts
DC Plate Current	0.30 Amperes
DC Grid Current	0.075 Amperes
Plate Input	450 Watts
Plate Dissipation	190 Watts

Typical Operation

DC Plate Voltage	1,500 Volts
DC Grid Voltage	—200 Volts
Peak R-F Grid Voltage	295 Volts
DC Plate Current	0.267 Amperes
DC Grid Current, approx.	0.009 Amperes
Driving Power, approx.	2.5 Watts
Power Output, approx.	285 Watts

RADIO-FREQUENCY POWER AMPLIFIER AND OSCILLATOR—CLASS C TELEGRAPHY

(Key-down conditions per tube without amplitude Modulation)¶

Maximum Ratings, Absolute Values

DC Plate Voltage	2,000 Volts
DC Grid Voltage	—500 Volts
DC Plate Current	0.35 Amperes
DC Grid Current	0.075 Amperes
Plate Input	700 Watts
Plate Dissipation	275 Watts

Typical Operation

DC Plate Voltage	2,000 Volts
DC Grid Voltage	—250 Volts
Peak R-F Grid Voltage	380 Volts
DC Plate Current	0.325 Amperes
DC Grid Current, approx.	0.016 Amperes
Driving Power, approx.	6 Watts
Power Output, approx.	500 Watts

¶Modulation essentially negative may be used if the positive peak of the envelope does not exceed 115 per cent of carrier conditions.

An IT&T Associate

Long-life is an outstanding characteristic of Federal tubes . . . and when they're old, they are still vigorous, still efficient.

FEDERAL POWER TRIODE
Type F-212-E
275 Watts Plate Dissipation

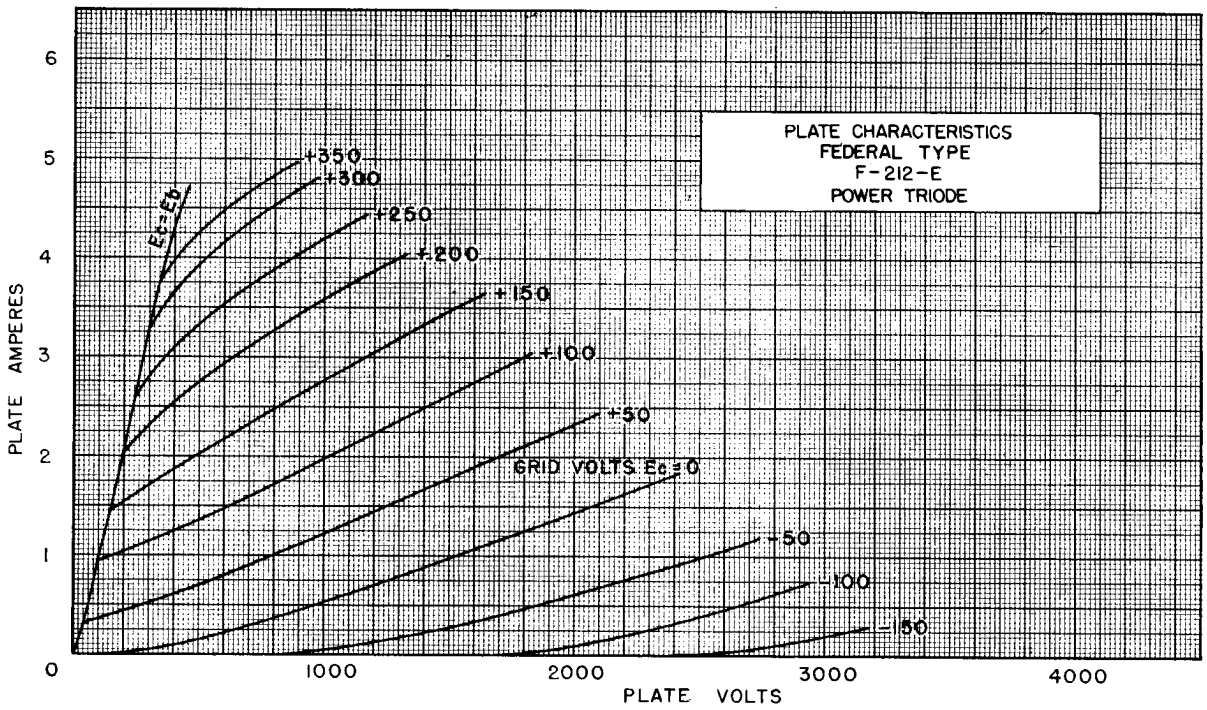

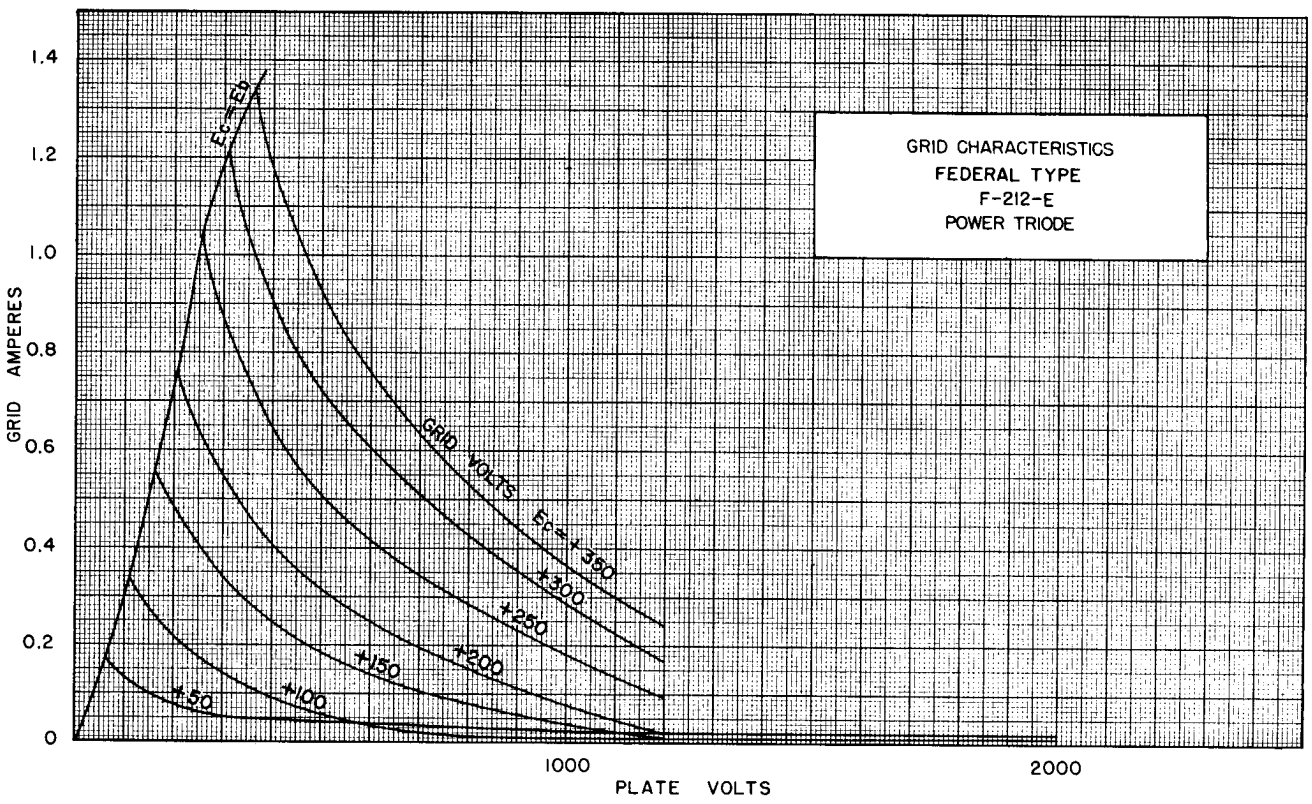

FEDERAL POWER TRIODE
Type F-212-E
275 Watts Plate Dissipation

Federal tube development is a long-drawn-out process of design, experiment, test and re-test. Result: the highly refined tube.

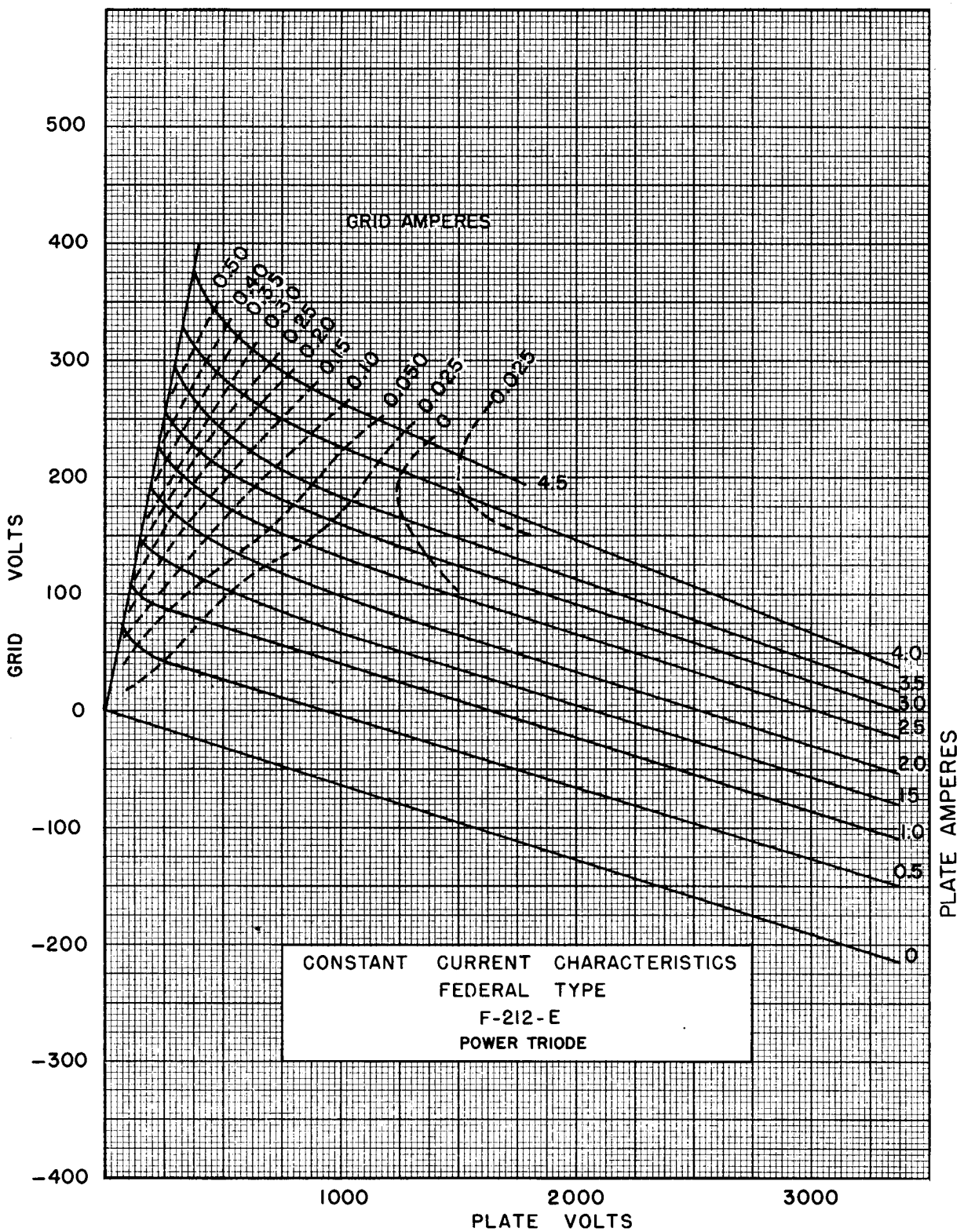

Customers habitually appraise Federal *values* by what they get (for their money) in tube performance, in the kind and length of service rendered.

FEDERAL POWER TRIODE
Type F-212-E
275 Watts Plate Dissipation

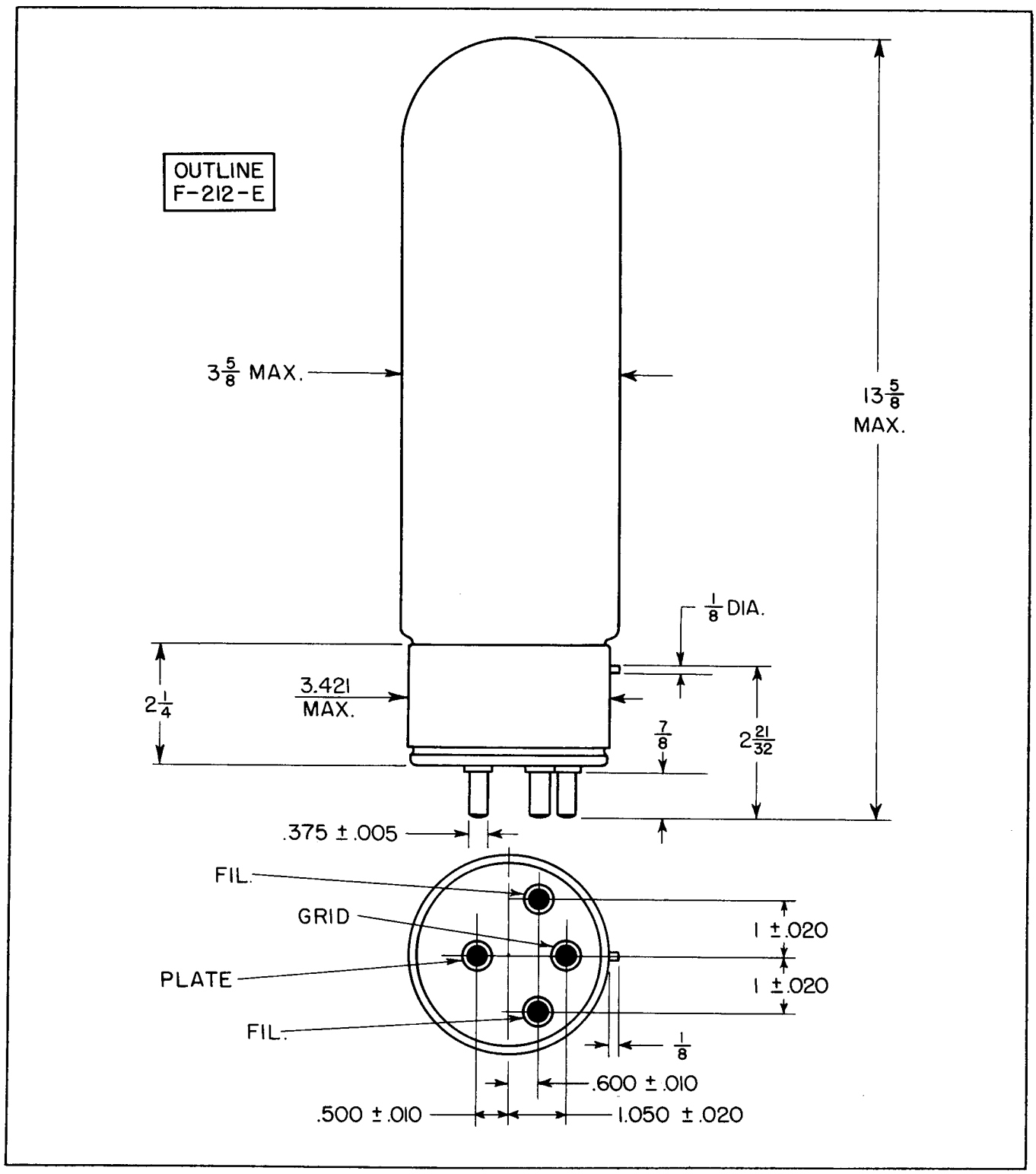

Federal Telephone and Radio Corporation
100 Kingsland Road Clifton, New Jersey

An IT&T Associate

Federal Always Has
Made Better Tubes

Form FJ-228 Printed in U. S. A.

NOW
F220C/320B

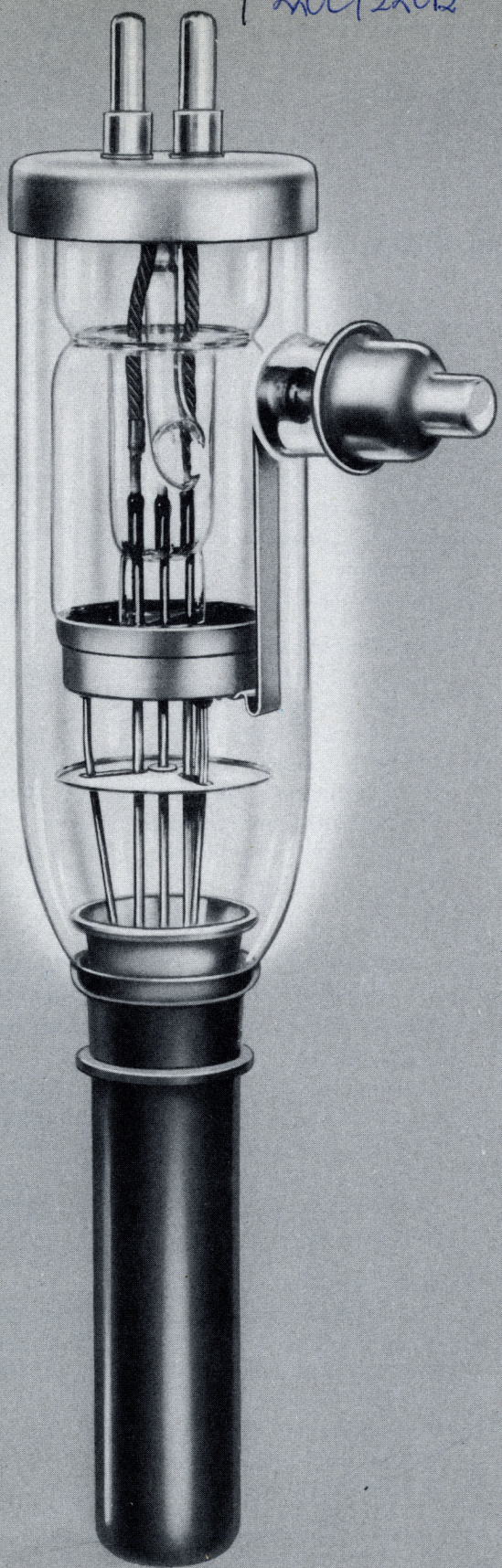

FEDERAL POWER TRIODE
Type F-320-B
10 Kilowatts Plate Dissipation

GENERAL DATA

DESCRIPTION:

Federal's F-320-B is a three-electrode tube designed for use as an RF amplifier, oscillator or Class B modulator. The anode, water cooled, is capable of dissipating 10 kilowatts. The cathode is a pure tungsten filament. Maximum ratings apply up to 4 megacycles.

Electrical:

Filament Voltage	21.5 Volts
Filament Current	41 Amperes
Filament Starting Current	82 Amperes max.
Filament Cold Resistance	0.080 Ohms
Amplification Factor, at I_b = 0.85 amps., E_c = —50 volts	40

Interelectrode Capacitances

Grid-Plate	23.5 $\mu\mu$f
Grid-Filament	16.5 $\mu\mu$f
Plate-Filament	2 $\mu\mu$f

Mechanical:

Mounting Position—
Vertical, anode down

Type of Cooling—Water

Minimum Water Flow on Anode	5 GPM
Maximum Outgoing Water Temperature	70° C
Maximum Glass Temperature	150° C

Net Weight, approximate	4 Pounds

Copyright 1949, Federal Telephone and Radio Corporation

FEDERAL POWER TRIODE
Type F-320-B
10 Kilowatts Plate Dissipation

Federal's F-320-B is interchangeable, electrically and mechanically, with the 220-C.

Maximum Ratings and Typical Operating Conditions

AUDIO-FREQUENCY POWER AMPLIFIER AND MODULATOR—CLASS B

Maximum Ratings, Absolute Values

DC Plate Voltage	15,000 Volts
Maximum Signal DC Plate Current†	1.5 Amperes
Maximum Signal Plate Input†	20 Kilowatts
Plate Dissipation†	10 Kilowatts

Typical Operation

(Unless otherwise specified, values are for two tubes)

DC Plate Voltage	13,500 Volts
DC Grid Voltage	—250 Volts
Peak A-F Grid-to-Grid Voltage	2,100 Volts
Zero Signal DC Plate Current	0.25 Amperes
Maximum Signal DC Plate Current	2.5 Amperes
Effective Load Resistance, Plate to Plate	12,000 Ohms
Maximum Signal Driving Power, approximate	450 Watts
Maximum Signal Power Output, approximate	24 Kilowatts

†Averaged over any audio-frequency cycle of sine-wave form.

RADIO-FREQUENCY POWER AMPLIFIER—CLASS B

(Carrier conditions per tube for use with a maximum modulation factor of 1.0)

Maximum Ratings, Absolute Values

DC Plate Voltage	15,000 Volts
DC Plate Current	1.2 Amperes
Plate Input	15 Kilowatts
Plate Dissipation	10 Kilowatts

Typical Operation

DC Plate Voltage	12,000 Volts
DC Grid Voltage	—275 Volts
Peak R-F Grid Voltage	1,080 Volts
DC Plate Current	0.63 Amperes
DC Grid Current, approximate	0.08 Amperes
Driving Power, approximate‡	80 Watts
Power Output, approximate	2.5 Kilowatts

‡At crest of audio-frequency cycle with modulation factor of 1.0.

PLATE-MODULATED RADIO-FREQUENCY POWER AMPLIFIER—CLASS C TELEPHONY

(Carrier conditions per tube for use with a maximum modulation factor of 1.0)

Maximum Ratings, Absolute Values

DC Plate Voltage	10,000 Volts
DC Grid Voltage	—3,000 Volts
DC Plate Current	1.1 Amperes
DC Grid Current	0.25 Amperes
Plate Input	10 Kilowatts
Plate Dissipation	6.6 Kilowatts

Typical Operation

DC Plate Voltage	9,000 Volts
DC Grid Voltage	—840 Volts
Peak R-F Grid Voltage	1,500 Volts
DC Plate Current	0.76 Amperes
DC Grid Current, approximate	0.04 Amperes
Driving Power, approximate	65 Watts
Power Output, approximate	5.1 Kilowatts

RADIO-FREQUENCY POWER AMPLIFIER AND OSCILLATOR—CLASS C TELEGRAPHY

(Key-down conditions per tube without amplitude modulation)¶

Maximum Ratings, Absolute Values

DC Plate Voltage	15,000 Volts
DC Grid Voltage	—3,000 Volts
DC Plate Current	1.5 Amperes
DC Grid Current	0.3 Amperes
Plate Input	22.5 Kilowatts
Plate Dissipation	10 Kilowatts

Typical Operation

DC Plate Voltage	10,000 Volts
DC Grid Voltage	—500 Volts
Peak R-F Grid Voltage	1,500 Volts
DC Plate Current	1.5 Amperes
DC Grid Current, approximate	0.06 Amperes
Driving Power, approximate	90 Watts
Power Output, approximate	10 Kilowatts

¶Modulation essentially negative may be used if the positive peak of the envelope does not exceed 115 per cent of carrier conditions.

An IT&T Associate

Federal tubes of all types are in service around the world, delivering the high calibre performance for which they were designed.

FEDERAL POWER TRIODE
Type F-320-B
10 Kilowatts Plate Dissipation

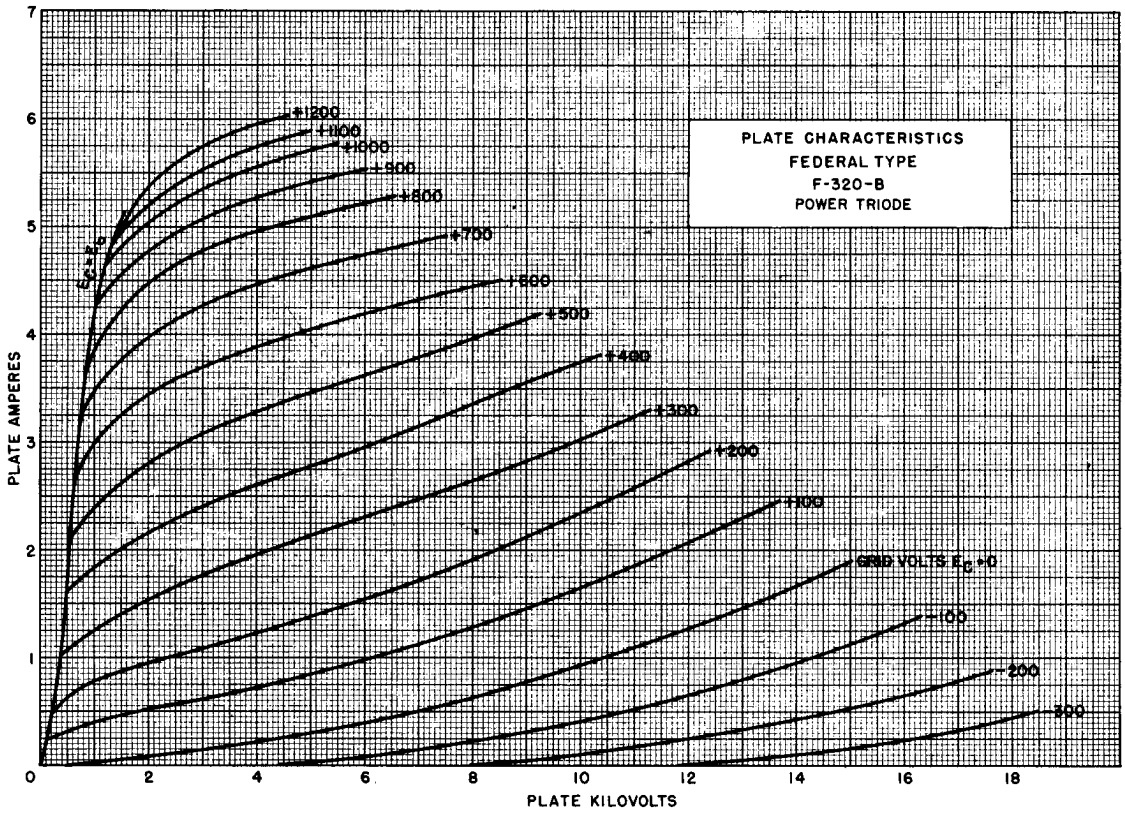

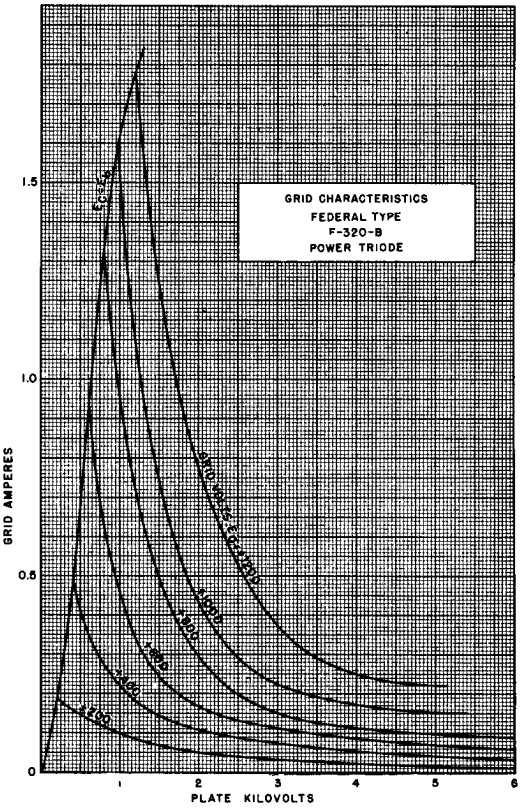

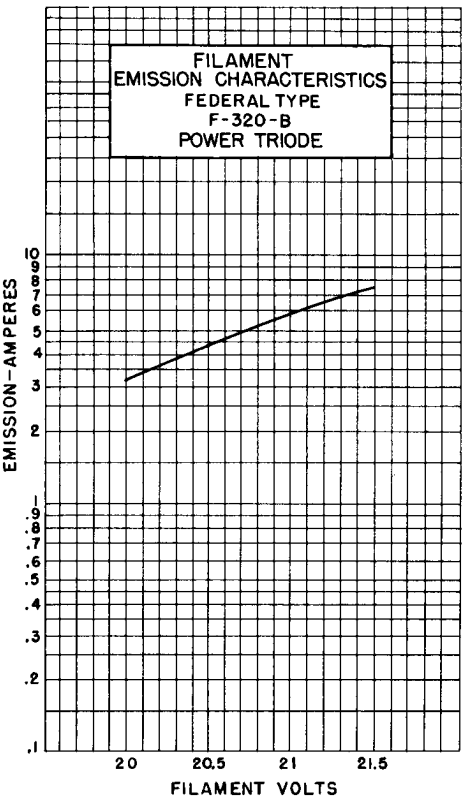

FEDERAL POWER TRIODE
Type F-320-B
10 Kilowatts Plate Dissipation

The high quality of materials and precision craftsmanship established by Federal in the early days of tube making have never been compromised.

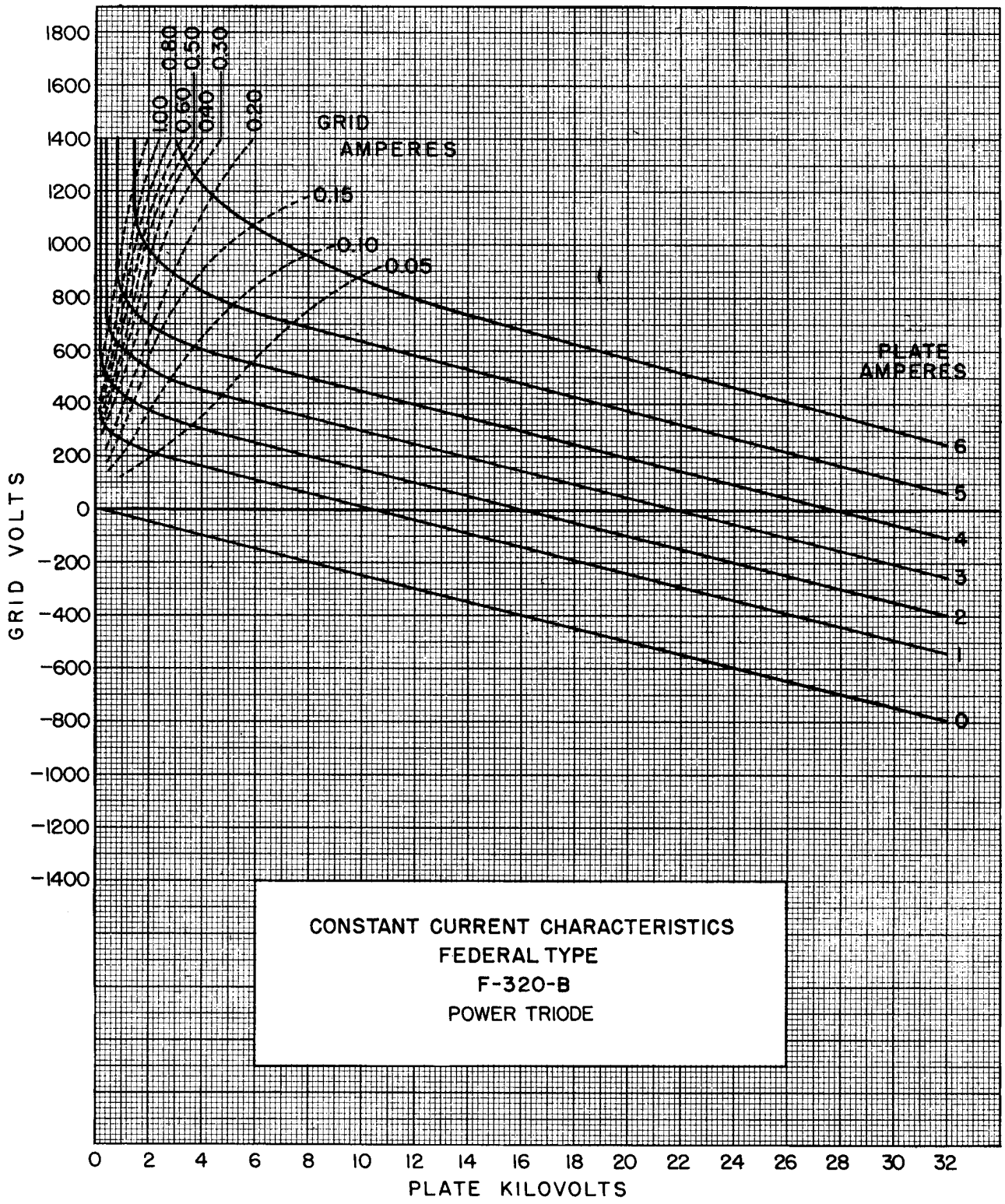

Long life in a tube is not a chance result or circumstance. In Federal, long life is a part of the design.

FEDERAL POWER TRIODE
Type F-320-B
10 Kilowatts Plate Dissipation

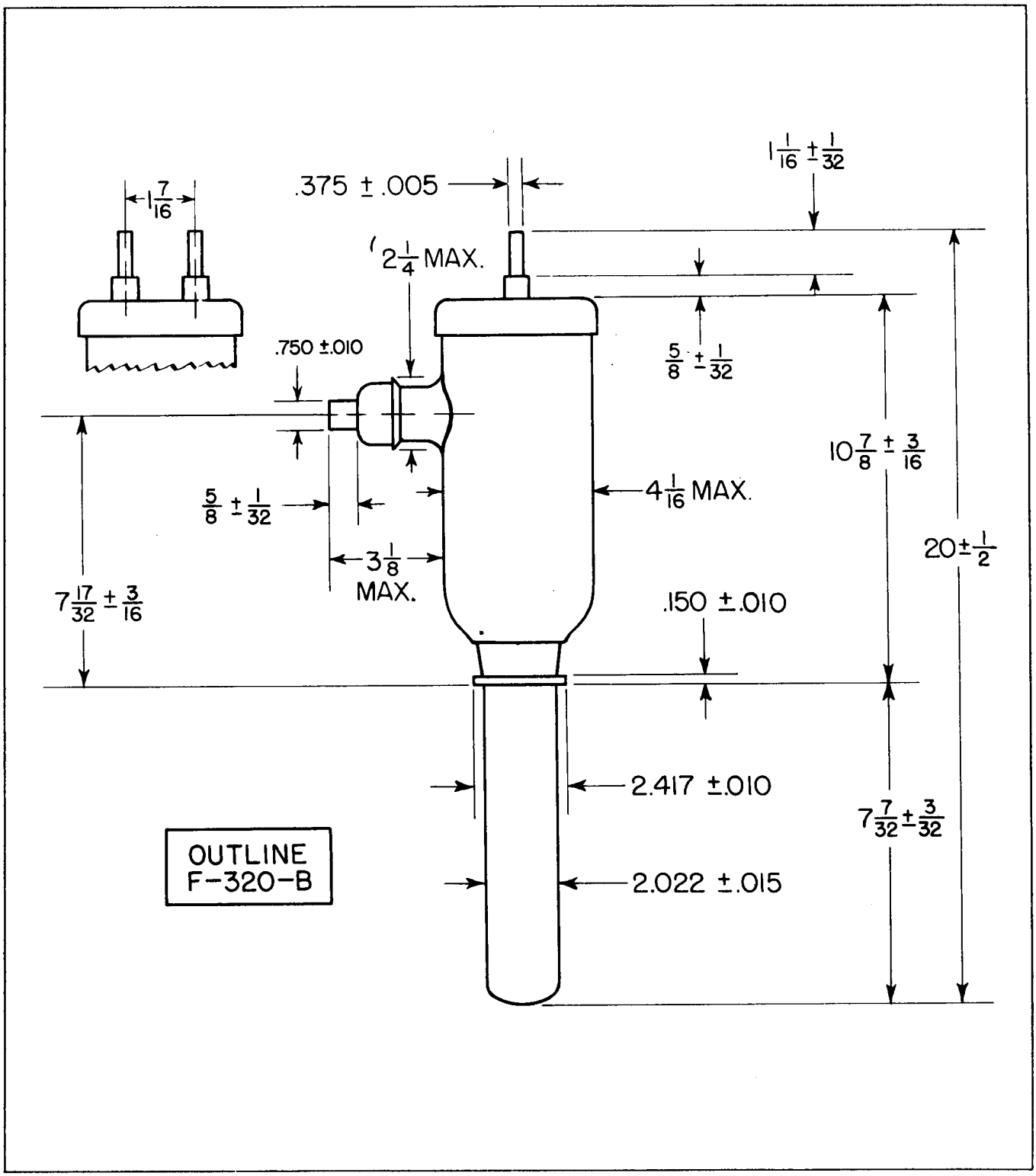

Federal Telephone and Radio Corporation
100 Kingsland Road Clifton, New Jersey

An IT&T Associate

Federal Always Has
Made Better Tubes

Form FJ-161 Printed in U. S. A.

NOW
F 220CA/320BA

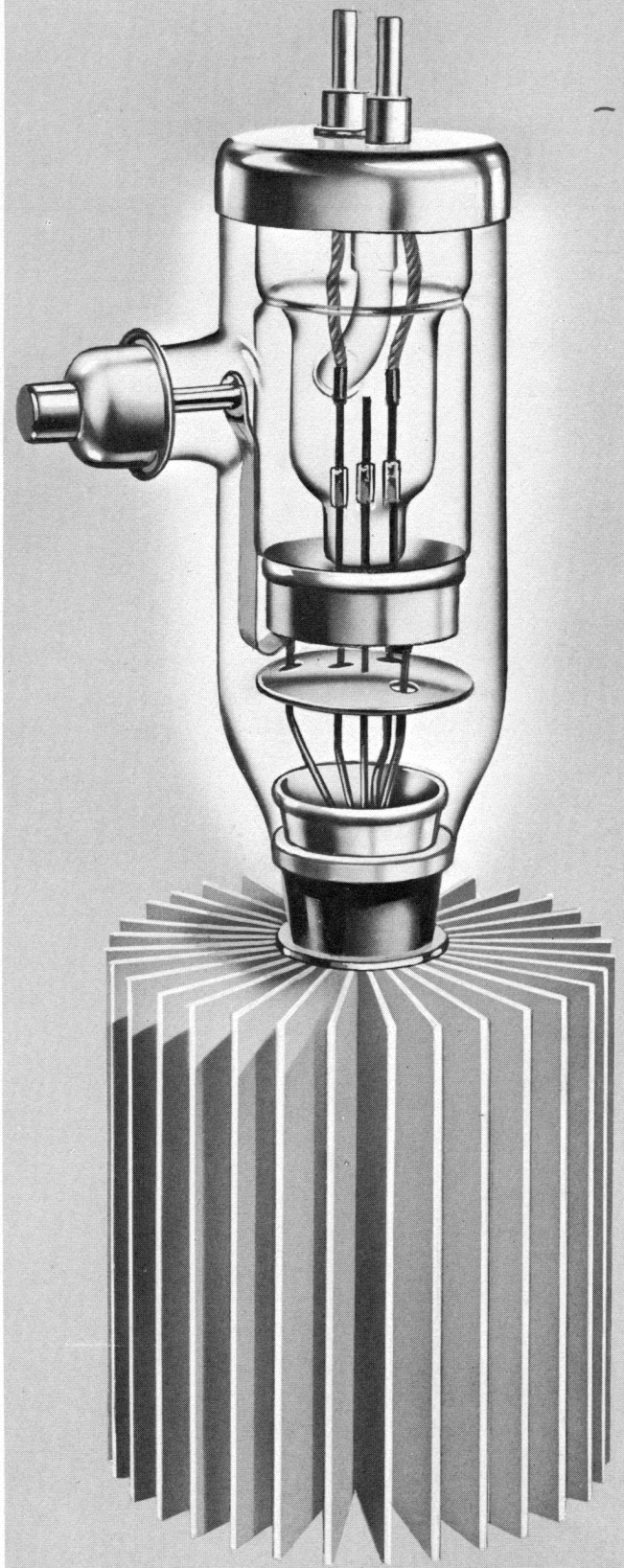

FEDERAL POWER TRIODE
Type F-320BA/220CA
5 Kilowatts Plate Dissipation

GENERAL DATA

DESCRIPTION:

Federal's F-320BA/220CA is a three-electrode tube designed for use as an R-F Amplifier, Oscillator, or Class B Modulator. The anode, forced air-cooled, is capable of dissipating 5 kilowatts. The cathode is a pure tungsten filament. Maximum ratings apply up to 4 megacycles.

Electrical:

Filament Voltage	21.5 Volts
Filament Current	41.0 Amperes
Filament Starting Current	82.0 Amperes
Available Thermionic Emission	7.0 Amperes
Amplification Factor, at I_b=0.85 amps. E_c=—50 volts	40
Interelectrode Capacitances	
Grid-Plate	23.5 $\mu\mu$f
Grid-Filament	17.5 $\mu\mu$f
Plate-Filament	1.6 $\mu\mu$f

Mechanical:

Mounting Position— Vertical, Anode Down	
Type of Cooling—Forced Air	
Required Air Flow on Anode Plate Dissipation (Kilowatts)	5
Air Flow—Cubic Feet Per Minute	600
Maximum Glass Temperature	150° C
Net Weight, approximate	35 Lbs.

For Characteristic Curves see F-320-B. Except for reduction of plate dissipation to 5KW, Maximum Ratings and Typical Operation of F-320-B apply.

Copyright 1953, Federal Telephone and Radio Company

FEDERAL POWER TRIODE
Type F-320BA/220CA
5 Kilowatts Plate Dissipation

Precision craftsmanship was initiated by Federal in the earliest days of tube manufacture, and has been maintained ever since.

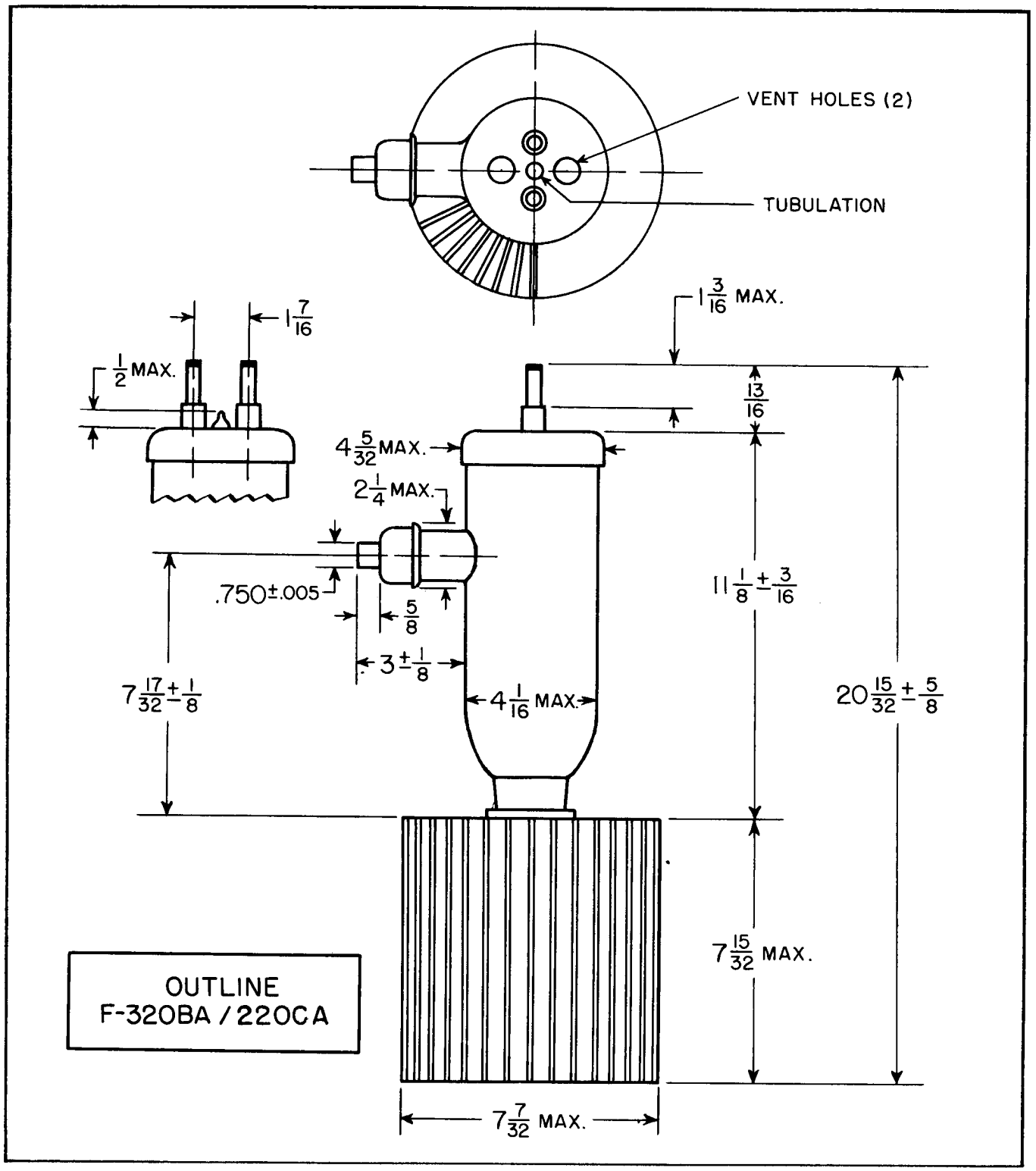

OUTLINE
F-320BA / 220CA

Form F-590 Printed in U. S. A.

Federal Telephone and Radio Company
100 Kingsland Road Clifton, New Jersey

FEDERAL POWER TRIODE
Type F-342-A
25 Kilowatts Plate Dissipation

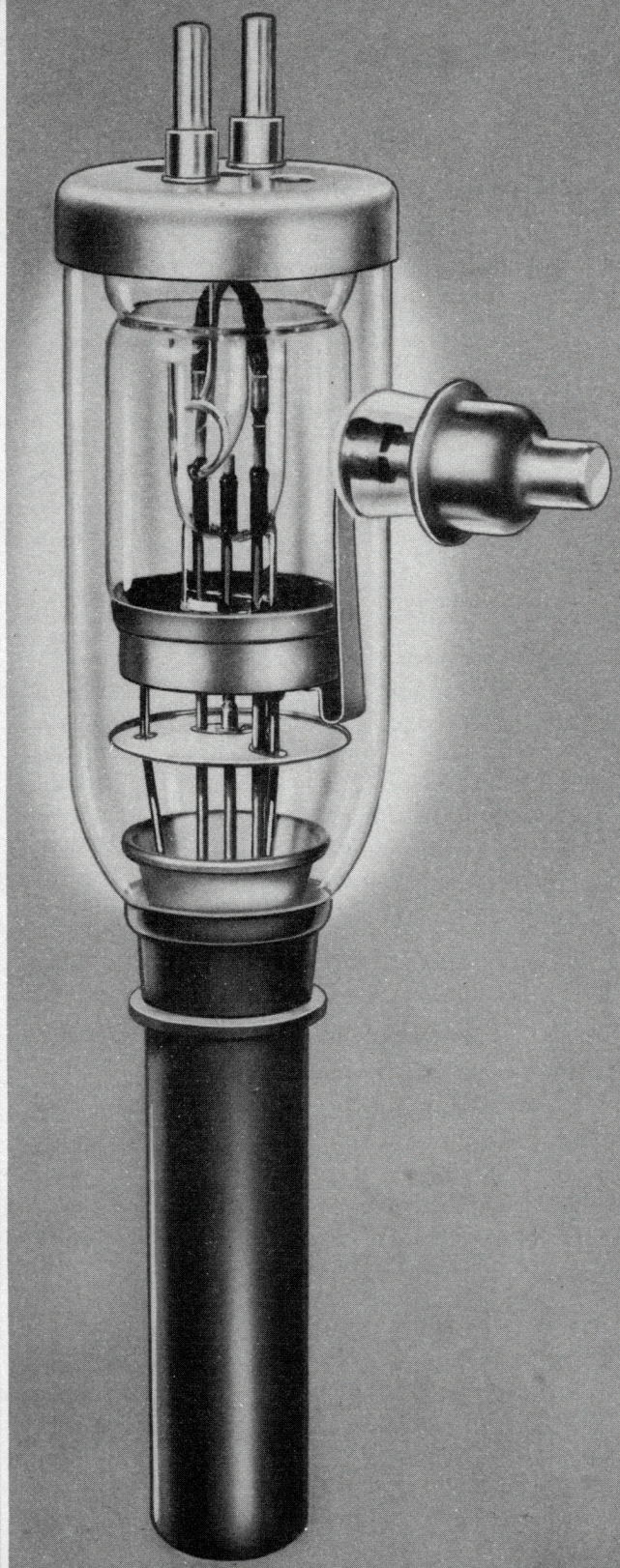

GENERAL DATA

DESCRIPTION:

Federal's F-342-A is a three-electrode tube designed for use as a radio-frequency amplifier, oscillator, or Class B modulator. The anode, water-cooled, is capable of dissipating 25 kilowatts. The cathode is a pure tungsten filament. Maximum ratings apply up to 4 megacycles. Operation up to 16 megacycles is permissible if the plate voltage and input are reduced to 50% of maximum.

Electrical:

Filament Voltage	20	Volts
Filament Current	71	Amperes
Filament Starting Current	142	Amperes max.
Filament Cold Resistance	0.021	Ohm
Peak Cathode Current	13.5	Amperes
Amplification Factor, at		
$E_c = -200V$ $I_b = 0.75A$	40	
Interelectrode Capacitances		
Grid-Plate	25	$\mu\mu f$
Grid-Filament	19	$\mu\mu f$
Plate-Filament	2.5	$\mu\mu f$

Mechanical:

Mounting Position— Vertical, anode down		
Type of Cooling—Water		
Minimum Water Flow on Anode	10	GPM
Maximum Outgoing Water Temperature	70°	C
Maximum Glass Temperature	150°	C
Net Weight, approximate	4	Pounds

Copyright 1950, Federal Telephone and Radio Corporation

FEDERAL POWER TRIODE
Type F-342-A
25 Kilowatts Plate Dissipation

Buyers who specify "Federal" because they want *long-lived* tubes, know from experience they'll get what they want.

Maximum Ratings and Typical Operating Conditions

AUDIO-FREQUENCY POWER AMPLIFIER AND MODULATOR—CLASS B

Maximum Ratings, Absolute Values

DC Plate Voltage	20,000 Volts
Maximum Signal DC Plate Current†	3 Amperes
Maximum Signal Plate Input†	50 Kilowatts
Plate Dissipation†	25 Kilowatts

Typical Operation

(Unless otherwise specified, values are for two tubes)

DC Plate Voltage	15,000 Volts
DC Grid Voltage	—200 Volts
Peak A-F Grid-to-Grid Voltage	1,700 Volts
Zero Signal DC Plate Current	0.8 Ampere
Maximum Signal DC Plate Current	3.2 Amperes
Effective Load Resistance, Plate to Plate	9,600 Ohms
Maximum Signal Driving Power, approximate	200 Watts
Maximum Signal Power Output, approximate	30 Kilowatts

†Averaged over any audio-frequency cycle of sine-wave form.

RADIO-FREQUENCY POWER AMPLIFIER—CLASS B

(Carrier conditions per tube for use with a maximum modulation factor of 1.0)

Maximum Ratings, Absolute Values

DC Plate Voltage	20,000 Volts
DC Plate Current	2 Amperes
Plate Input	30 Kilowatts
Plate Dissipation	25 Kilowatts

Typical Operation

DC Plate Voltage	17,500 Volts
DC Grid Voltage	—430 Volts
Peak R-F Grid Voltage	760 Volts
DC Plate Current	1.55 Amperes
DC Grid Current, approximate	0.0 Amperes
Driving Power, approximate‡	30 Watts
Power Output, approximate	8.25 Kilowatts

‡At crest of audio-frequency cycle with modulation factor of 1.0.

PLATE-MODULATED RADIO-FREQUENCY POWER AMPLIFIER—CLASS C TELEPHONY

(Carrier conditions per tube for use with a maximum modulation factor of 1.0)

Maximum Ratings, Absolute Values

DC Plate Voltage	14,000 Volts
DC Grid Voltage	—5,000 Volts
DC Plate Current	1.5 Amperes
DC Grid Current	0.3 Ampere
Plate Input	20 Kilowatts
Plate Dissipation	15 Kilowatts

Typical Operation

DC Plate Voltage	12,500 Volts
DC Grid Voltage	—750 Volts
Peak R-F Grid Voltage	1,400 Volts
DC Plate Current	1 Ampere
DC Grid Current, approximate	0.05 Ampere
Driving Power, approximate	75 Watts
Power Output, approximate	10 Kilowatts

RADIO-FREQUENCY POWER AMPLIFIER AND OSCILLATOR—CLASS C TELEGRAPHY

(Key-down conditions per tube without amplitude Modulation)¶

Maximum Ratings, Absolute Values

DC Plate Voltage	20,000 Volts
DC Grid Voltage	—5,000 Volts
DC Plate Current	3 Amperes
DC Grid Current	0.3 Ampere
Plate Input	50 Kilowatts
Plate Dissipation	25 Kilowatts

Typical Operation

DC Plate Voltage	18,000 Volts
DC Grid Voltage	—1,000 Volts
Peak R-F Grid Voltage	2,300 Volts
DC Plate Current	2.6 Amperes
DC Grid Current, approximate	0.1 Ampere
Driving Power, approximate	200 Watts
Power Output, approximate	35 Kilowatts

¶Modulation essentially negative may be used if the positive peak of the envelope does not exceed 115 per cent of carrier conditions.

AN IT&T ASSOCIATE

Federal's name on a tube signifies the best in design, engineering, materials, components and craftsmanship.

FEDERAL POWER TRIODE
Type F-342-A
25 Kilowatts Plate Dissipation

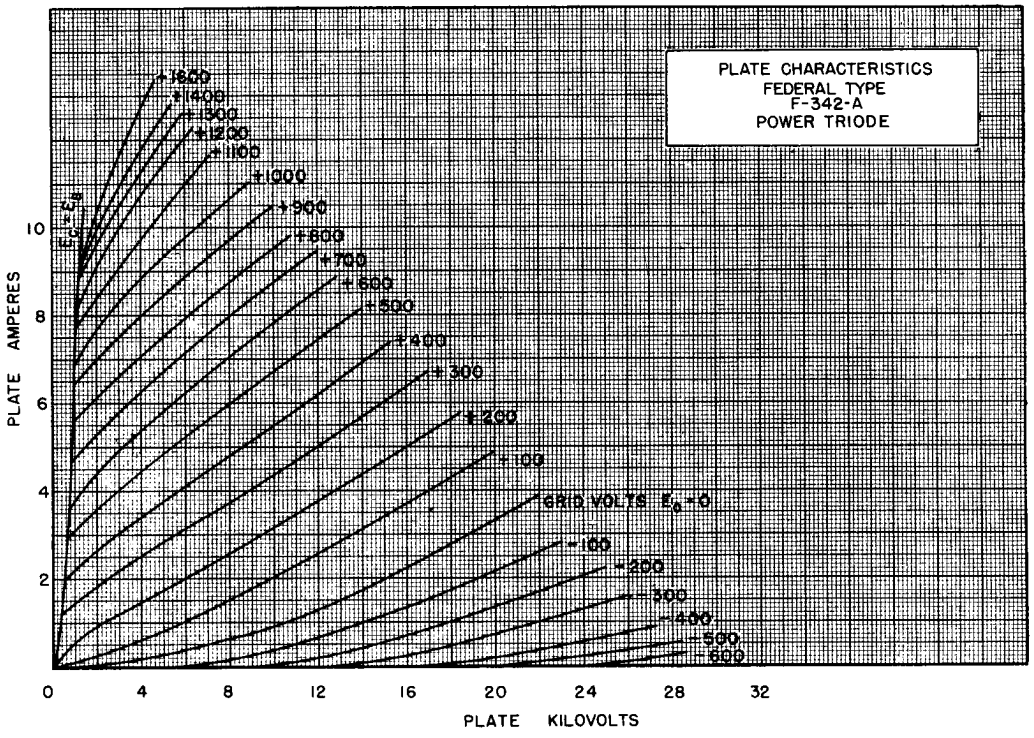

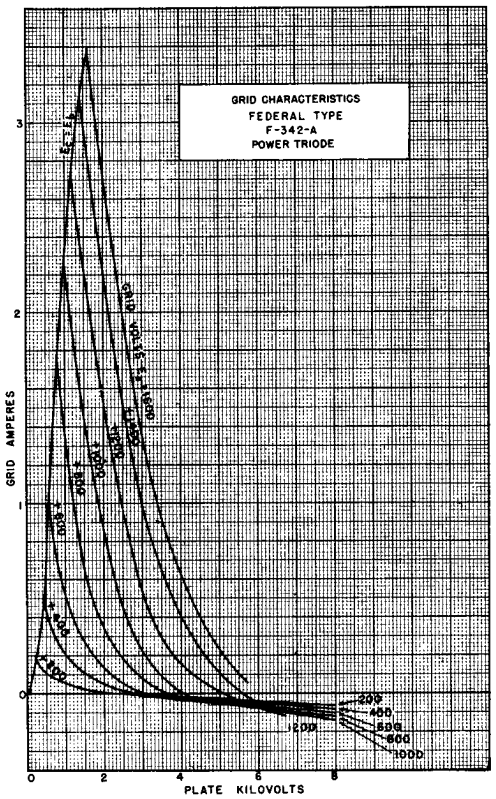

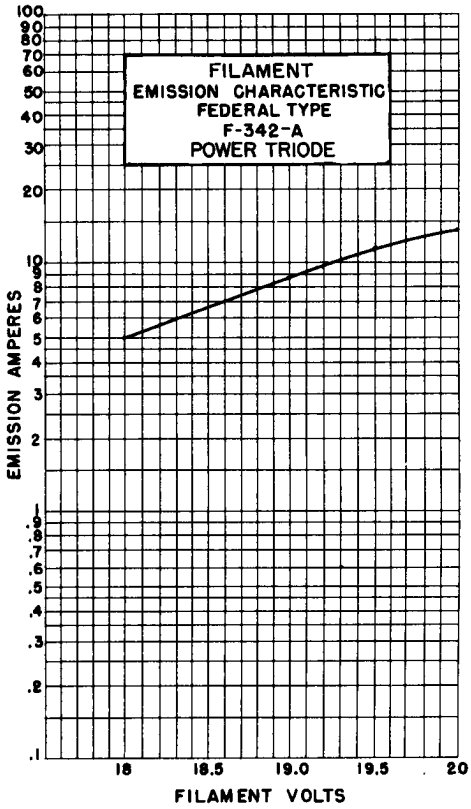

FEDERAL POWER TRIODE
Type F-342-A
25 Kilowatts Plate Dissipation

Federal always has made *first-quality* tubes, and the record goes back for more than 40 years.

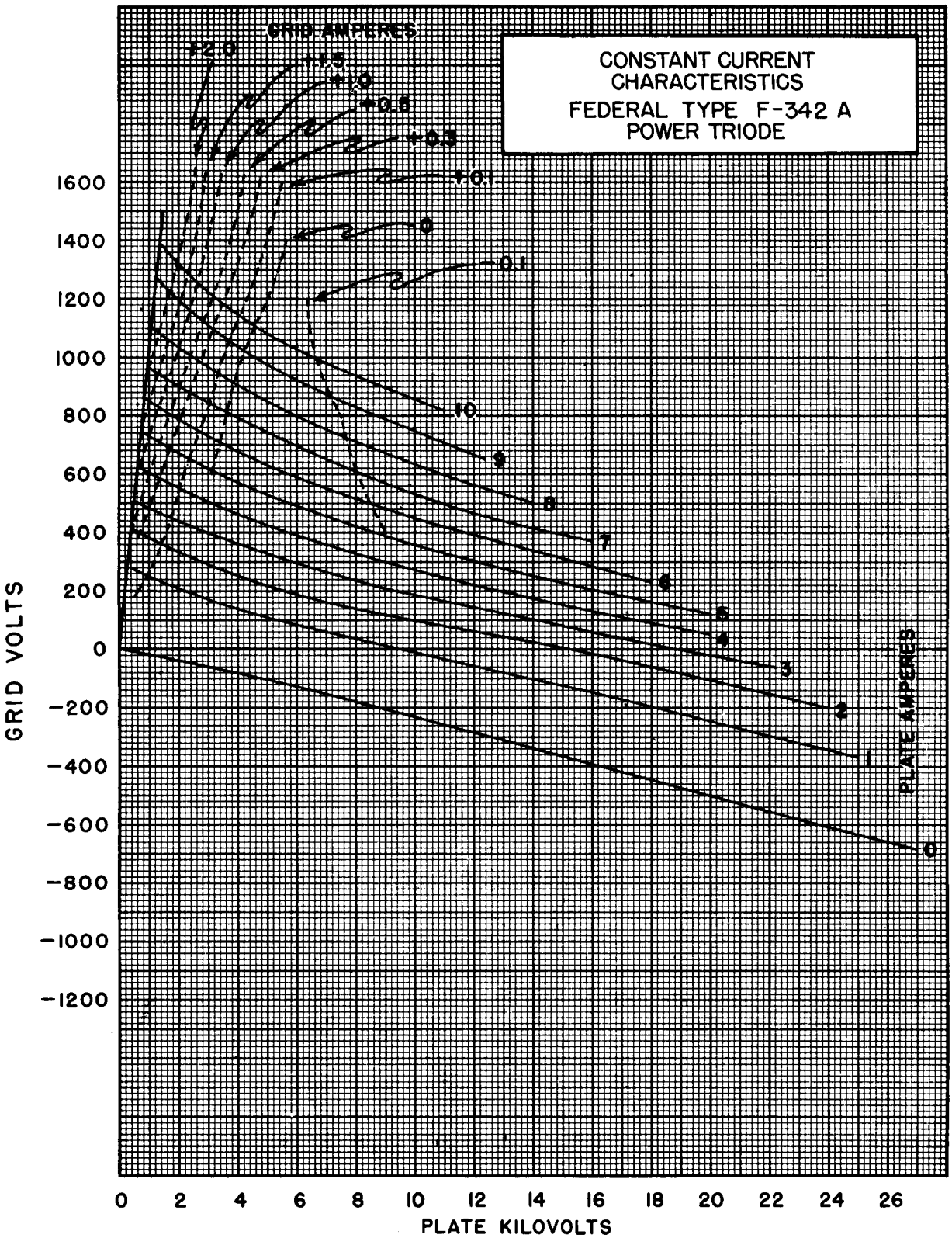

That Federal tubes, by their performance, largely sell themselves, is a tribute to the product and to the manufacturer.

FEDERAL POWER TRIODE
Type F-342-A
25 Kilowatts Plate Dissipation

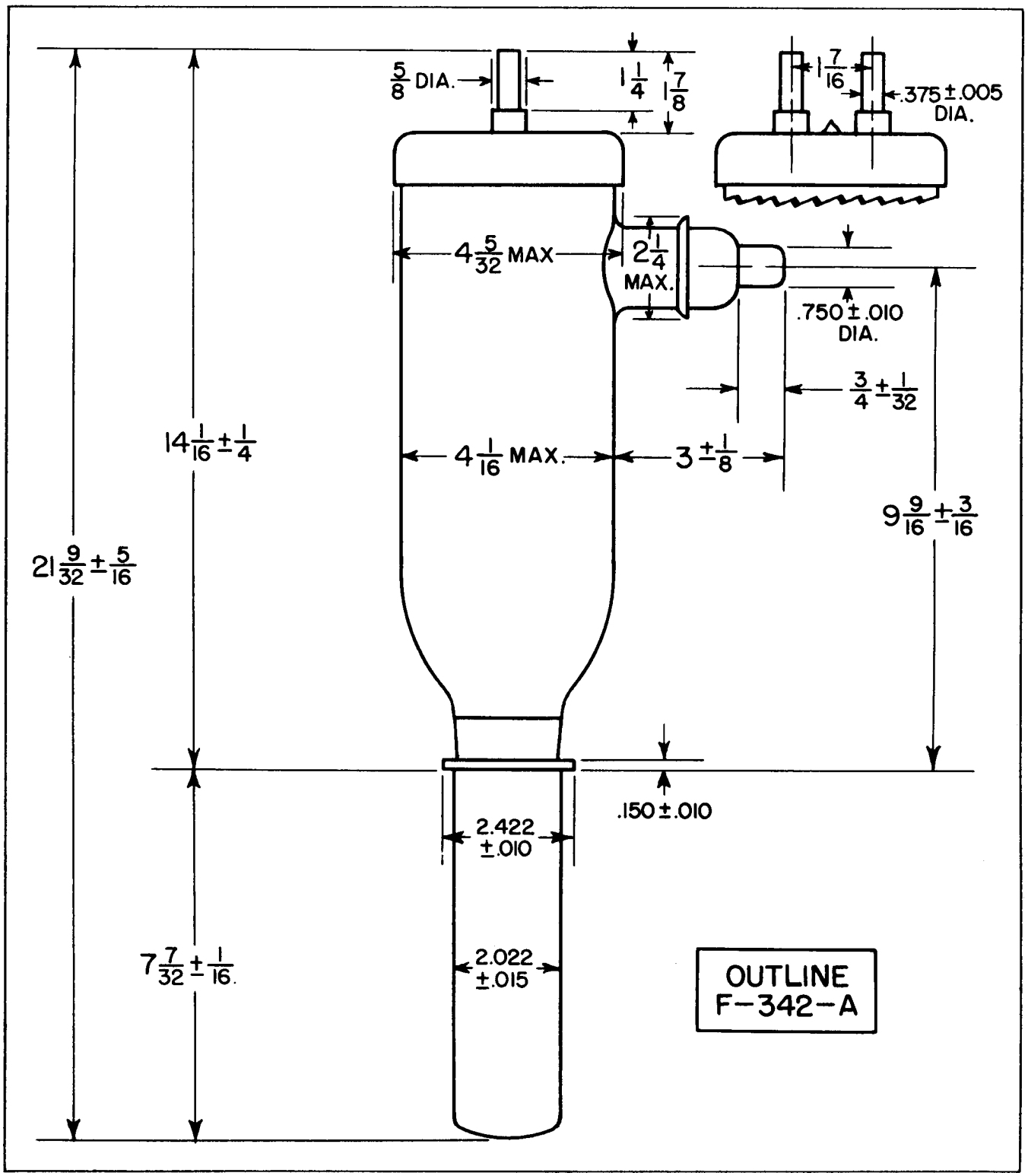

Federal Telephone and Radio Corporation
100 Kingsland Road Clifton, New Jersey

An IT&T Associate

When you are developing projects wherein tubes are components, consult Federal's engineers, let them advise and assist you . . . no obligation is incurred.

Over the years, hundreds of manufacturers, designers, technicians have taken advantage of this Federal service . . . with benefit both to their products and services.

Form FJ-185 Printed in U. S. A.

FEDERAL POWER TRIODE
Type F-343-A
10 Kilowatts Plate Dissipation

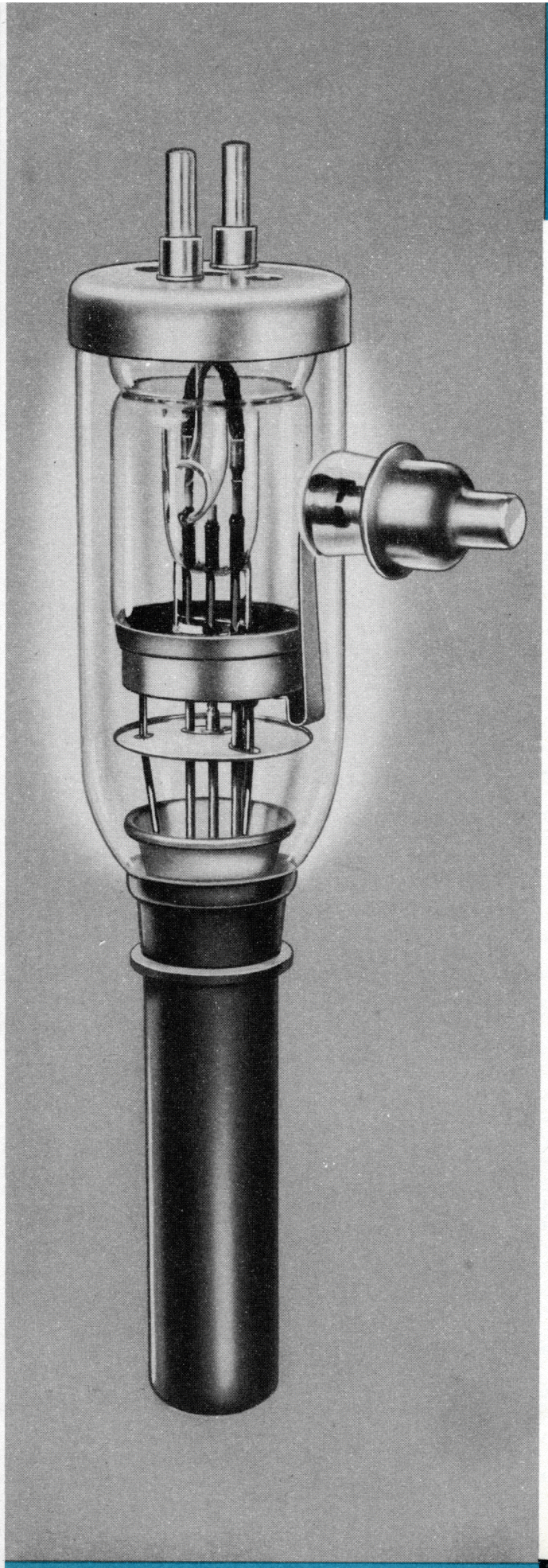

GENERAL DATA

DESCRIPTION:

Federal's F-343-A is a three-electrode tube designed for use as a radio-frequency amplifier, oscillator, or modulator. The anode, water-cooled, is capable of dissipating 10 kilowatts. The cathode is a pure tungsten filament. Maximum ratings apply up to 4 megacycles.

Electrical:

Filament Voltage	21.5	Volts
Filament Current	57.5	Amperes
Filament Starting Current	120	Amperes max.
Filament Cold Resistance	.0375	Ohms
Amplification Factor, at $I_b = 0.75$ amp., $E_c = -200$ volts	40	
Interelectrode Capacitances		
Grid-Plate	24	$\mu\mu$f
Grid-Filament	17	$\mu\mu$f
Plate-Filament	1.8	$\mu\mu$f

Mechanical:

Mounting Position— Vertical, anode down	
Type of Cooling—Water	
Minimum Water Flow on Anode	3 GPM
Maximum Outgoing Water Temperature	70° C
Maximum Glass Temperature	150° C
Net Weight, approximate	3.5 Pounds

Copyright 1950, Federal Telephone and Radio Corporation

FEDERAL POWER TRIODE
Type F-343-A
10 Kilowatts Plate Dissipation

Maximum Ratings vs. Operating Frequency

Frequency	4	10	16 Megacycles
Percentage of Maximum Rated Plate Voltage and Plate Input			
Class B—	100	85	75 Per Cent
Class C—Telephony	100	85	75 Per Cent
Class C—Telegraphy	100	75	50 Per Cent

Maximum Ratings and Typical Operating Conditions

AUDIO-FREQUENCY POWER AMPLIFIER AND MODULATOR—CLASS B

Maximum Ratings, Absolute Values

DC Plate Voltage	18,000 Volts
Maximum Signal DC Plate Current†	2 Amperes
Maximum Signal Plate Input†	30 Kilowatts
Plate Dissipation†	10 Kilowatts

Typical Operation

(Unless otherwise specified, values are for two tubes)

DC Plate Voltage	10,000	12,000 Volts
DC Grid Voltage	—150	—200 Volts
Peak A-F Grid-to-Grid Voltage	1,380	1,380 Volts
Zero Signal DC Plate Current	0.44	0.5 Ampere
Maximum Signal DC Plate Current	2.6	2.6 Amperes
Effective Load Resistance, Plate to Plate	7,600	8,600 Ohms
Maximum Signal Driving Power, approximate	175	150 Watts
Maximum Signal Power Output, approximate	15	18 Kilowatts

†Averaged over any audio-frequency cycle of sine-wave form.

RADIO-FREQUENCY POWER AMPLIFIER—CLASS B

(Carrier conditions per tube for use with a maximum modulation factor of 1.0)

Maximum Ratings, Absolute Values

DC Plate Voltage	18,000 Volts
DC Plate Current	1.5 Amperes
Plate Input	15 Kilowatts
Plate Dissipation	10 Kilowatts

Typical Operation

DC Plate Voltage	12,500	15,000 Volts
DC Grid Voltage	—300	—350 Volts
Peak R-F Grid Voltage	550	550 Volts
DC Plate Current	0.7	0.7 Ampere
DC Grid Current, approximate	.008	.003 Ampere
Driving Power, approximate‡	25	13 Watts
Power Output, approximate	2.9	3.5 Kilowatts

‡At crest of audio-frequency cycle with modulation factor of 1.0.

PLATE-MODULATED RADIO-FREQUENCY POWER AMPLIFIER—CLASS C TELEPHONY

(Carrier conditions per tube for use with a maximum modulation factor of 1.0)

Maximum Ratings, Absolute Values

DC Plate Voltage	9,000 Volts
DC Grid Voltage	—1,500 Volts
DC Plate Current	1 Ampere
DC Grid Current	0.2 Ampere
Plate Input	9 Kilowatts
Plate Dissipation	5 Kilowatts

Typical Operation

DC Plate Voltage	5,000	7,500 Volts
DC Grid Voltage	—300	—400 Volts
Peak R-F Grid Voltage	870	950 Volts
DC Plate Current	1	1 Ampere
DC Grid Current, approximate	0.06	0.05 Ampere
Driving Power, approximate	50	50 Watts
Power Output, approximate	3.3	5 Kilowatts

RADIO-FREQUENCY POWER AMPLIFIER AND OSCILLATOR—CLASS C TELEGRAPHY

(Key-down conditions per tube without amplitude Modulation)¶

Maximum Ratings, Absolute Values

DC Plate Voltage	18,000 Volts
DC Grid Voltage	—1,500 Volts
DC Plate Current	2 Amperes
DC Grid Current	0.2 Ampere
Plate Input	36 Kilowatts
Plate Dissipation	10 Kilowatts

Typical Operation

DC Plate Voltage	12,500	15,000 Volts
DC Grid Voltage	—600	—700 Volts
Peak R-F Grid Voltage	1,200	1,300 Volts
DC Plate Current	1.2	1.1 Amperes
DC Grid Current, approximate	.018	.018 Ampere
Driving Power, approximate	20	25 Watts
Power Output, approximate	9.5	12 Kilowatts

¶Modulation essentially negative may be used if the positive peak of the envelope does not exceed 115 per cent of carrier conditions.

An IT&T Associate

Only the finest tubes give the finest service. Federal makes only *fine* tubes . . . fine from every standpoint of design and manufacture.

FEDERAL POWER TRIODE
Type F-343-A
10 Kilowatts Plate Dissipation

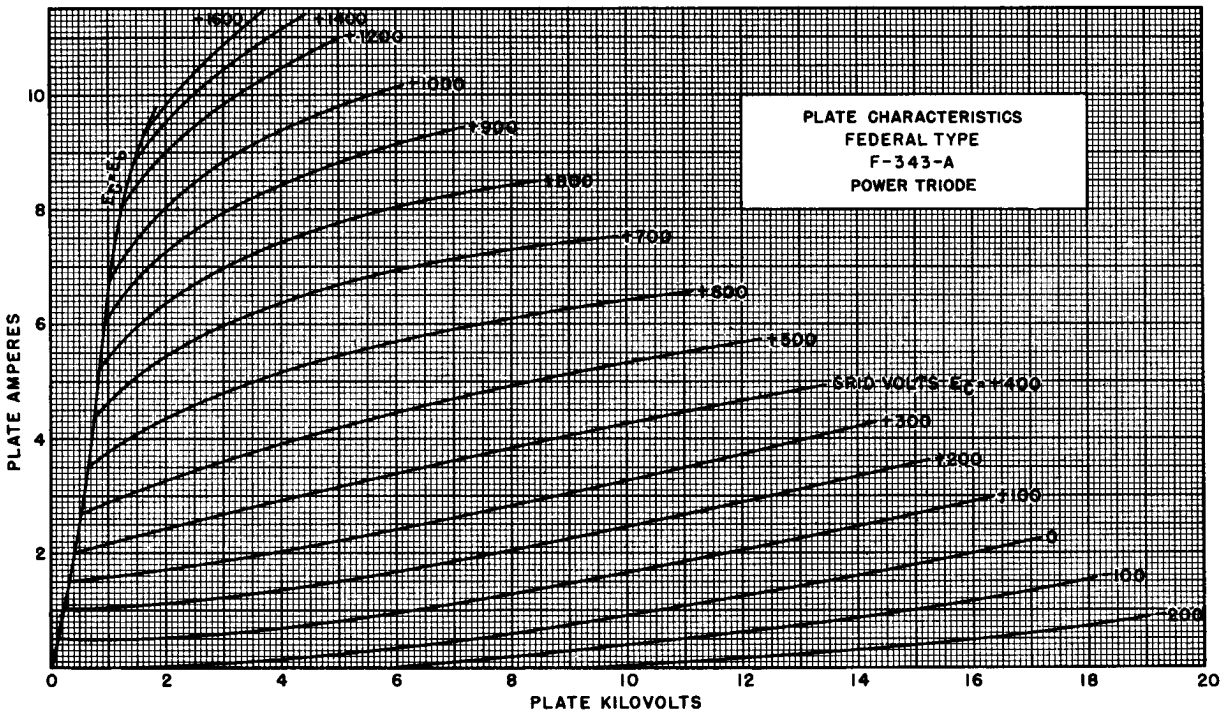

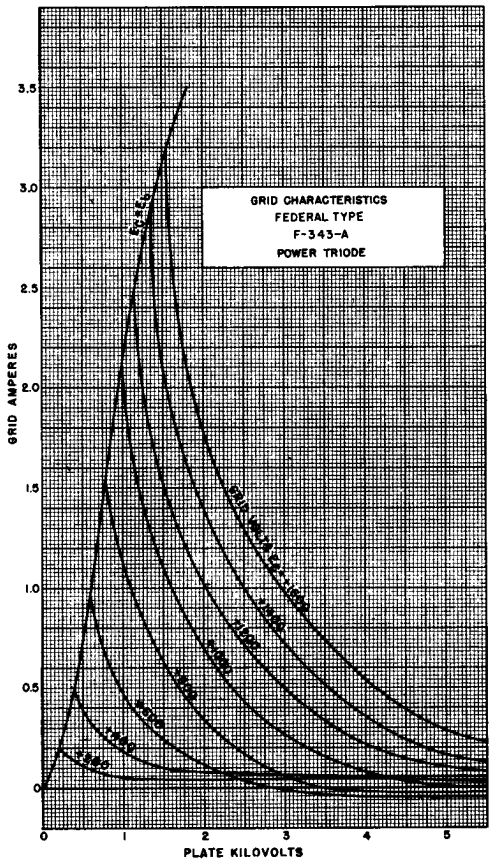

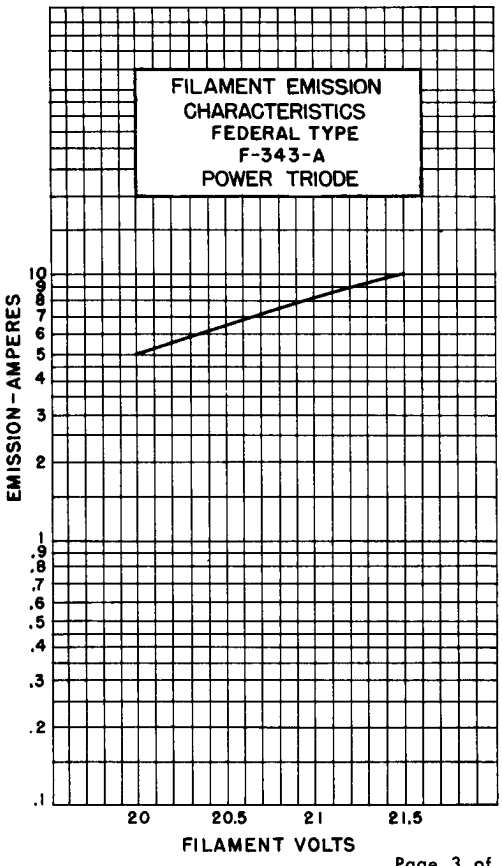

FEDERAL POWER TRIODE
Type F-343-A
10 Kilowatts Plate Dissipation

Extra Federal Values: Exceptionally sturdy construction; superior high vacuum processing; ratings commensurate with design and application.

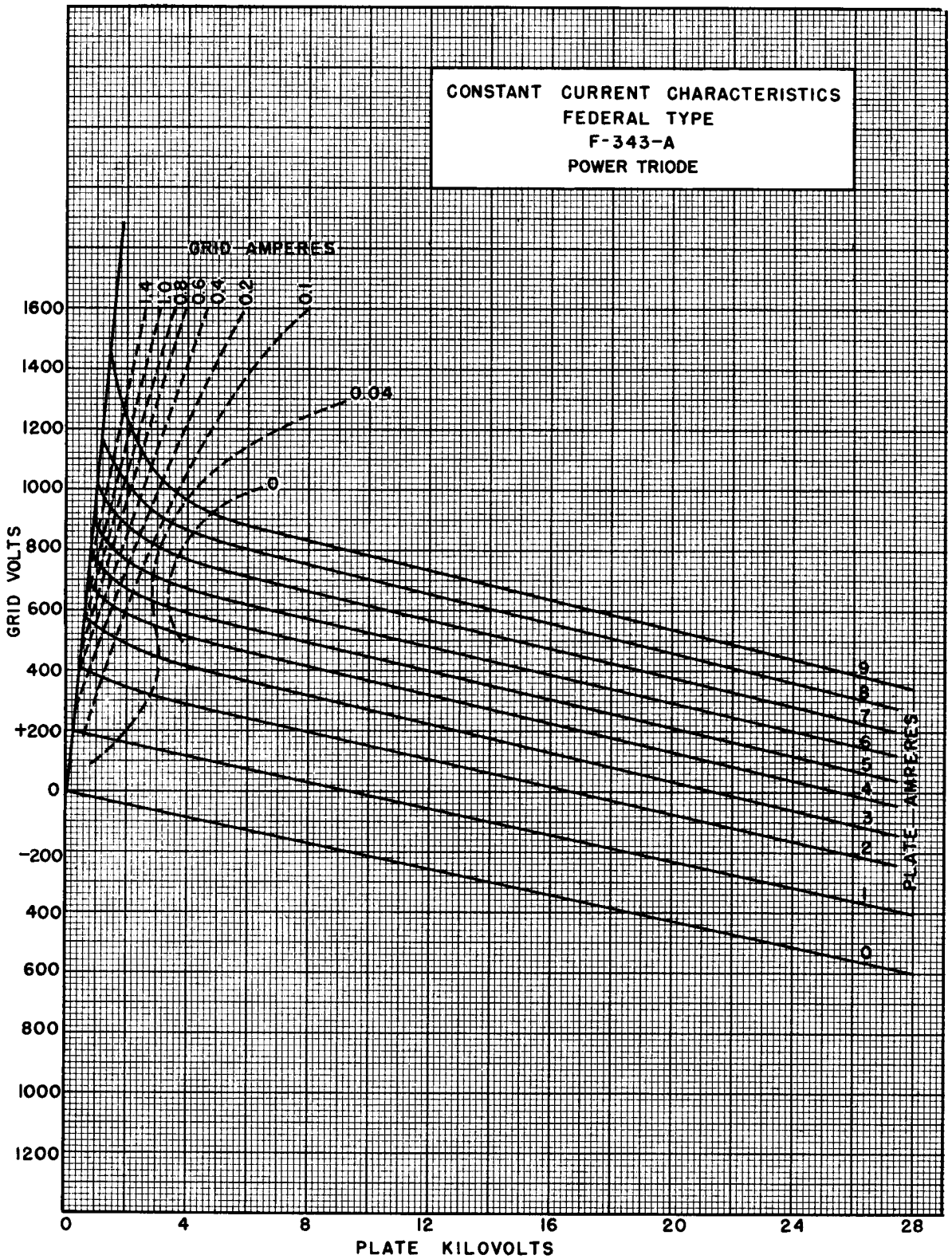

To assure tube *excellence*, all incoming materials are subjected to the vigorous tests and standards specified by Federal engineers.

FEDERAL POWER TRIODE
Type F-343-A
10 Kilowatts Plate Dissipation

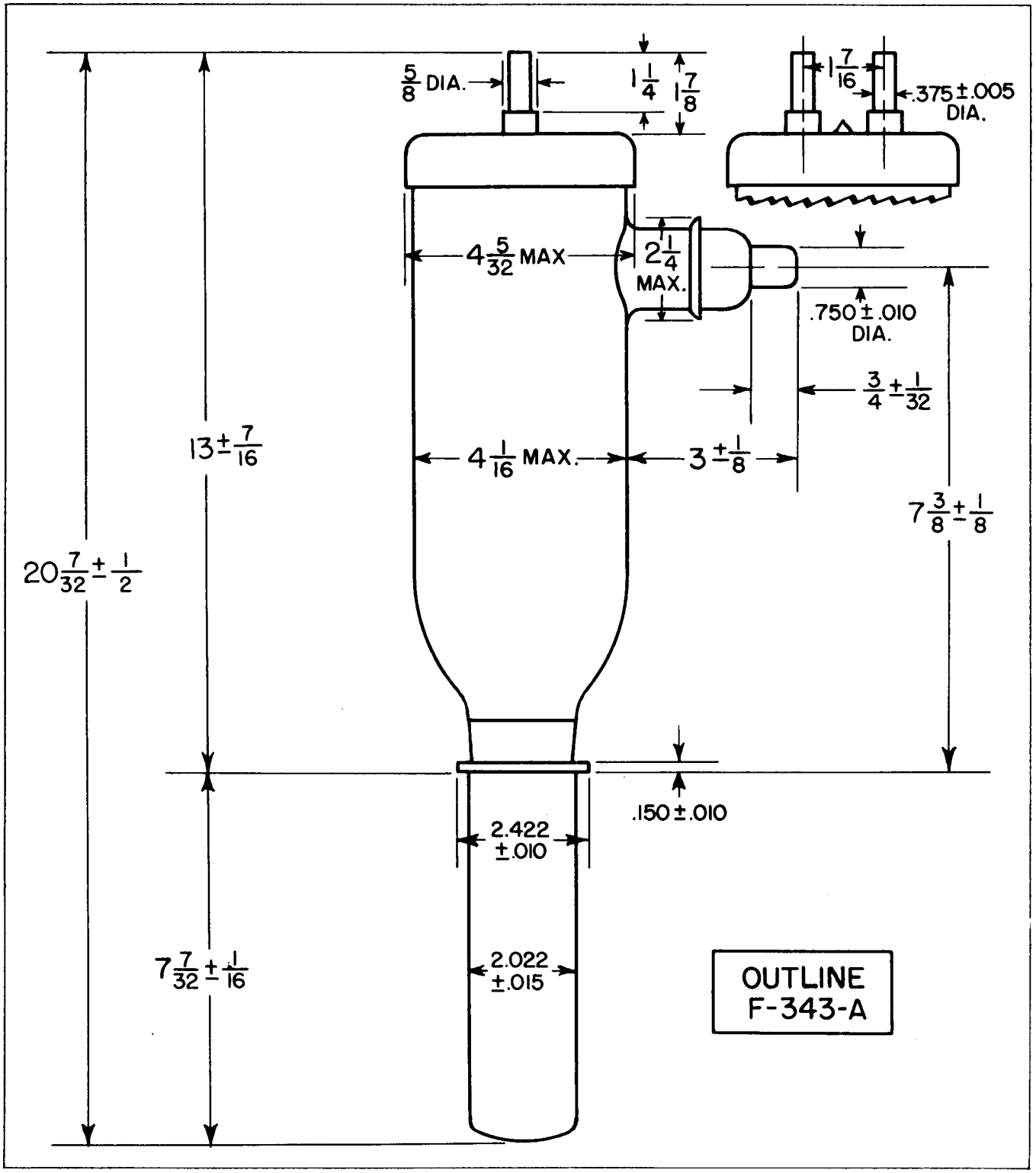

Federal Telephone and Radio Corporation
100 Kingsland Road Clifton, New Jersey

An IT&T Associate

Federal Always Has
Made Better Tubes

Form FJ-184 Printed in U. S. A.

FEDERAL POWER TRIODE
Type F-343-AA
5 Kilowatts Plate Dissipation

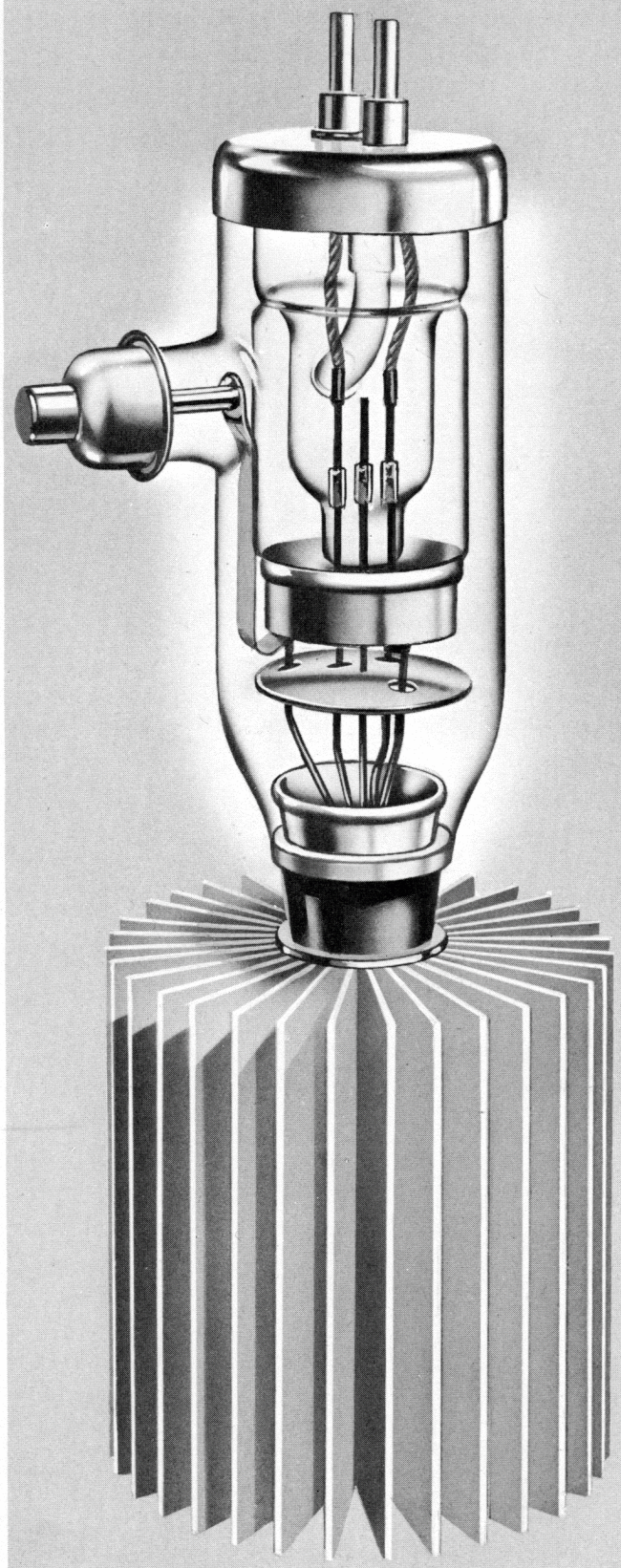

GENERAL DATA

DESCRIPTION:

The Type F-343-AA made by Federal is a three-electrode tube designed for use as a R-F power amplifier, oscillator, and Class B modulator. The anode, cooled by forced air, is capable of dissipating 5 kilowatts. The cathode is a pure tungsten filament. Maximum ratings apply up to 4 megacycles.

Electrical:

Filament Voltage	21.5 Volts
Filament Current	57.5 Amperes
Filament Starting Current	115.0 Amperes
Peak Cathode Current	8 Amperes
Amplification Factor, at	
I_b=0.50 amp.	
E_b=10,000 volts	40
Interelectrode Capacitances	
Grid-Plate	23.5 $\mu\mu$f
Grid-Filament	16.6 $\mu\mu$f
Plate-Filament	1.9 $\mu\mu$f

Mechanical:

Mounting Position—	
Vertical, Anode Down	
Required Air Flow on Anode	
Plate Dissipation (Kilowatts)	5
Air Flow—Cubic Feet Per Min.	600
Maximum Glass Temperature	150° C
Net Weight, approximate	45 Lbs.

For Characteristic Curves refer to Catalog Sheet F-343-A.

Except for reduction of plate dissipation to 5KW, Maximum Ratings and Typical Operation of F-343-A apply.

Copyright 1953, Federal Telephone and Radio Company

FEDERAL POWER TRIODE
Type F-343-AA
5 Kilowatts Plate Dissipation

Federal tubes have always been known for their *plus values:* an extra rugged construction, a longer life of service.

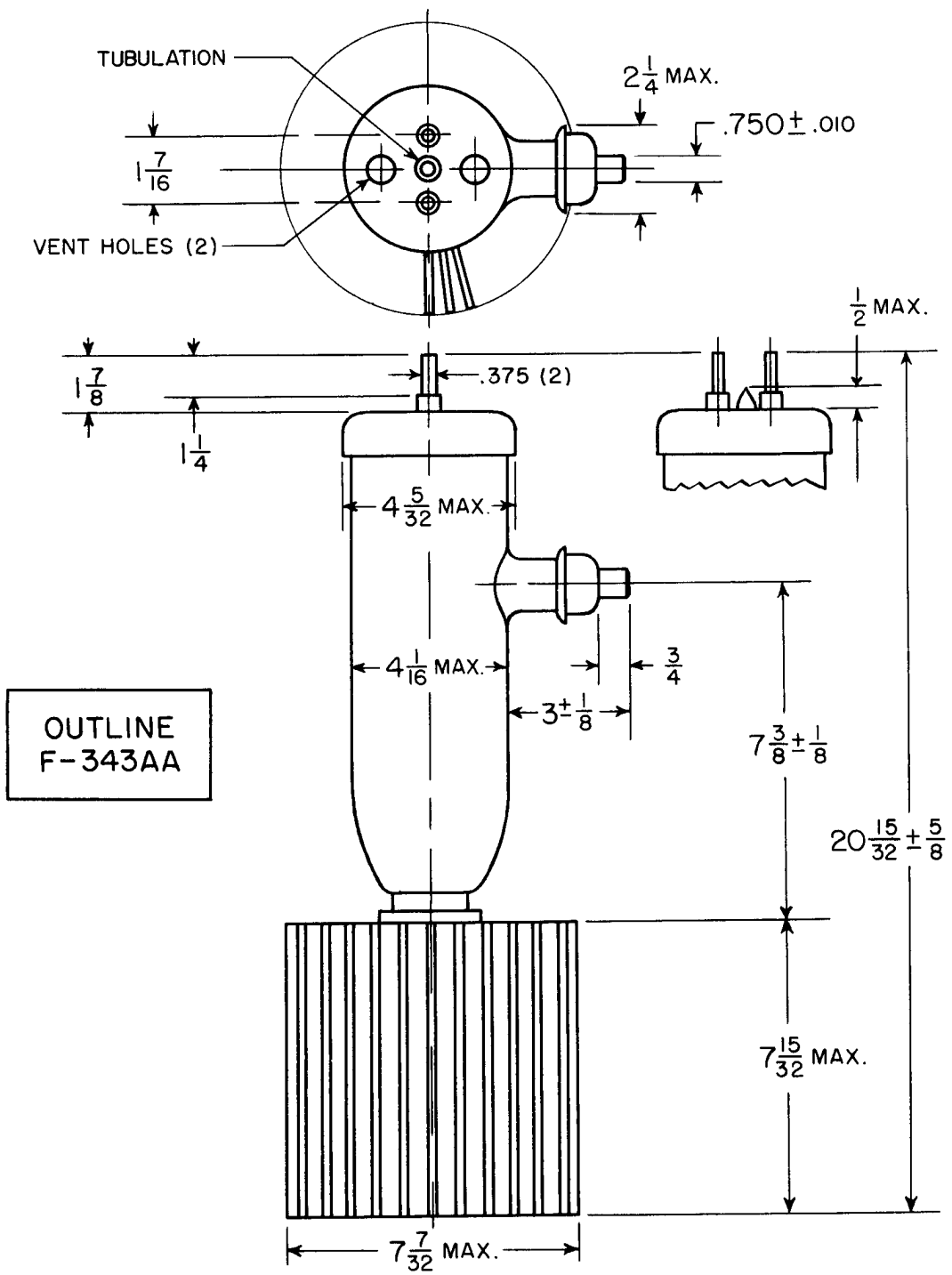

OUTLINE
F-343AA

Form F-591 Printed in U. S. A.

Federal Telephone and Radio Company
100 Kingsland Road VACUUM TUBE DEPARTMENT Clifton, New Jersey

FEDERAL MERCURY VAPOR HALF-WAVE RECTIFIER Type F-575-A

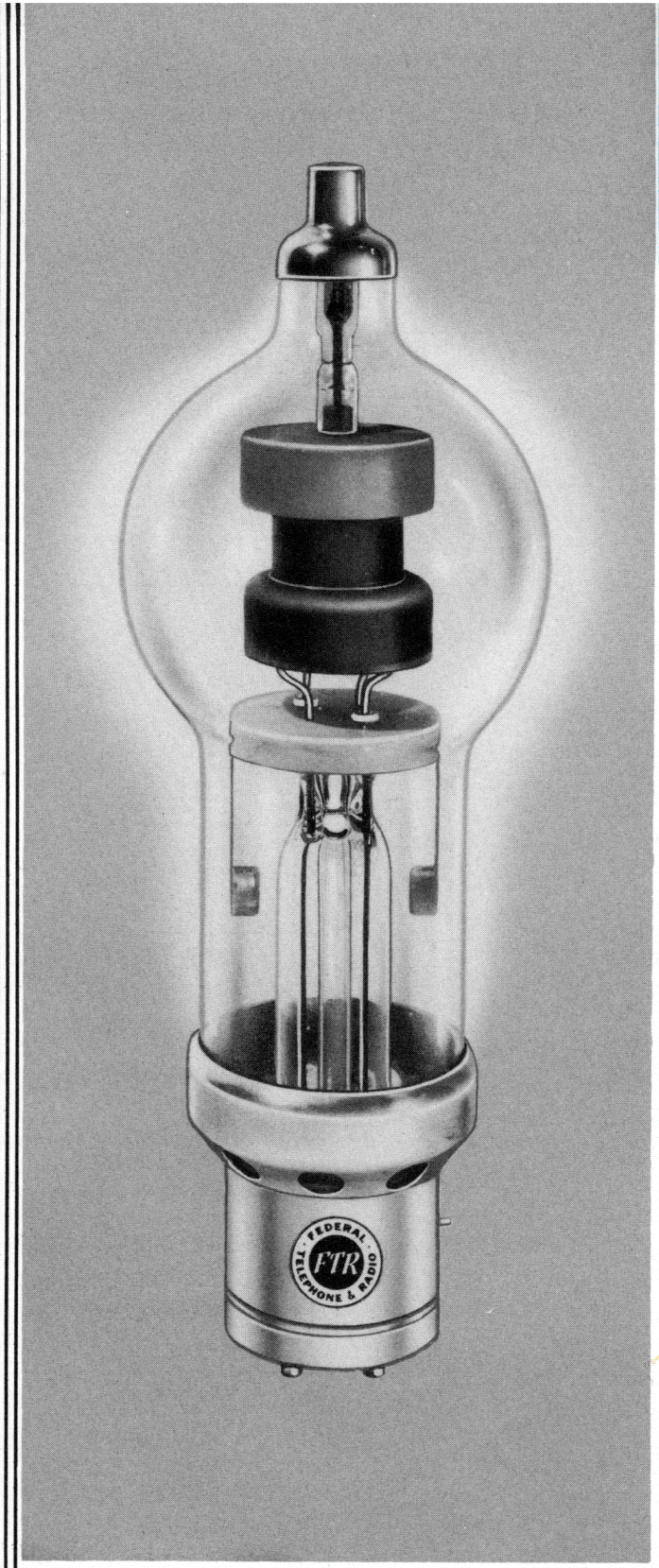

In all parts of the world, Federal Mercury Vapor Rectifier Tubes have, for many years, set the *standard* for fine performance. Compare F-575-A performance with any "best" you may have in mind.

GENERAL DATA

DESCRIPTION:

The Federal F-575-A is a mercury-vapor, half-wave rectifier for use in high voltage rectifier circuits.

Electrical:

Filament Voltage	5 Volts
Filament Current	10 Amperes
Cathode Heating Time	30 Seconds min.
Anode Voltage Drop, Typical	10 Volts
Critical Anode Voltage	50 Volts max.

Mechanical:

Type of Cooling	Convection
Equilibrium Condensed Mercury Temperature Rise over Ambient	
No load—approx.	12° C
Full load—approx.	20° C
Mounting Position	Vertical, base down
Net Weight, maximum	13 Ounces

Maximum Ratings, Absolute Values

Max. Peak Inverse Anode Voltage	10,000	15,000 Volts
Max. Cathode Current		
Peak	7	6 Amperes
Average	1.75	1.5 Amperes
Surge (max. duration 0.2 second)	60	60 Amperes
Max. Averaging Time	20	20 Seconds
Maximum Frequency	150	150 Cycles per second
Condensed-Mercury Temp. Limits*	20 to 60	20 to 50 degrees C

*To be measured within ¼" band immediately above base.

Copyright 1949, Federal Telephone and Radio Corporation

FEDERAL MERCURY VAPOR HALF-WAVE RECTIFIER Type F-575-A

Federal always has made better Rectifier tubes, better from the standpoint of *better service* rendered the user.

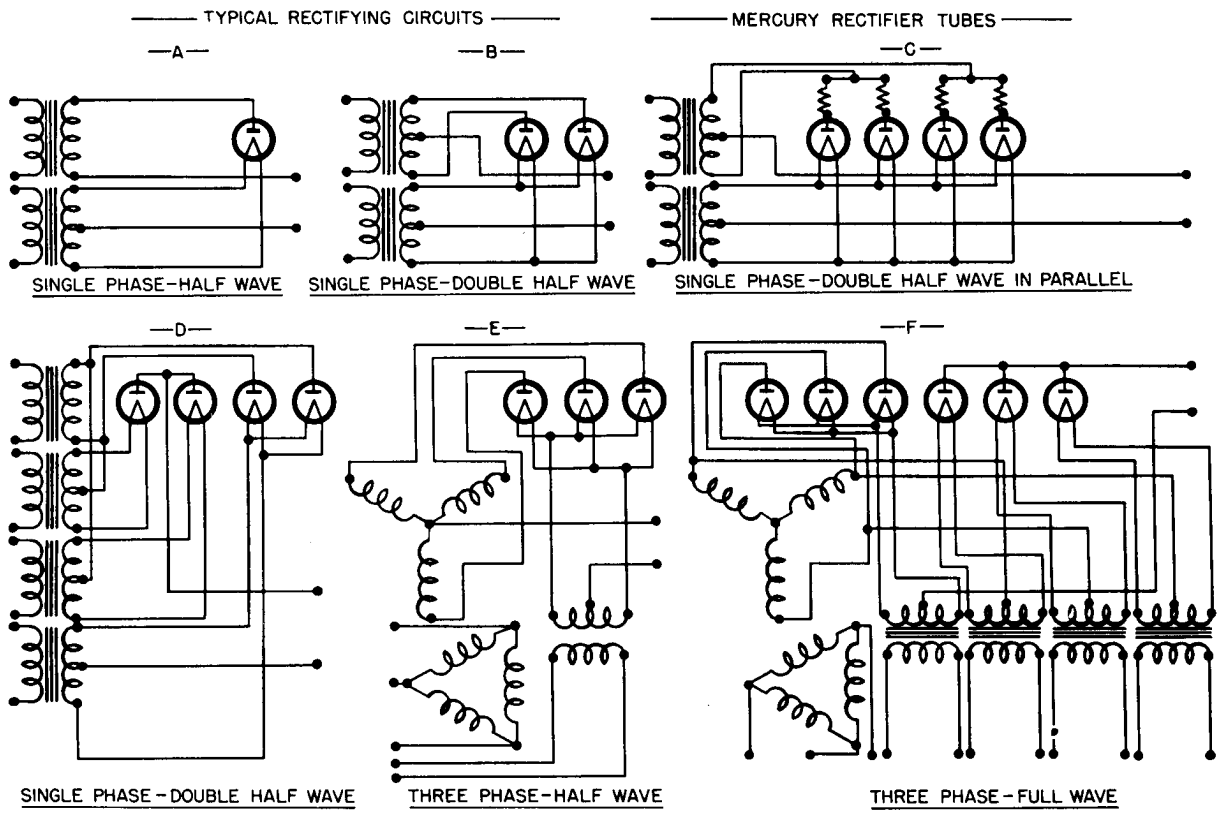

Typical rectifying circuits in which Federal's Type F-575-A may be employed are illustrated above. The approximate DC output current and voltage for each type of rectifying circuit shown, when tubes are operated at maximum permissible space current and inverse voltages, are given in the following table:

Circuit	*No. of Tubes*	*Input Voltage R.M.S.*	*Approx. DC Output*	
			Volts	*Amperes*
A	1	10,600 per tube	4,800	1.5
B	2	5,300 per tube	4,800	3.0
C	4	5,300 per tube	4,800	6.0
D	4	10,600 per 2 tubes	9,600	3.0
E	3	6,100 per leg	7,200	4.5
F	6	6,100 per leg	14,300	4.5

The above values are for rectifiers working into filters the input inductance of which, is sufficient to maintain the output current substantially constant. Pure sine waveform of the power source is assumed. Transformer regulation and voltage drops in tubes and filter are neglected.

An IT&T Associate

The F-575-A is engineered with the same painstaking care as the most costly tube manufactured by Federal.

FEDERAL MERCURY VAPOR HALF-WAVE RECTIFIER
Type F-575-A

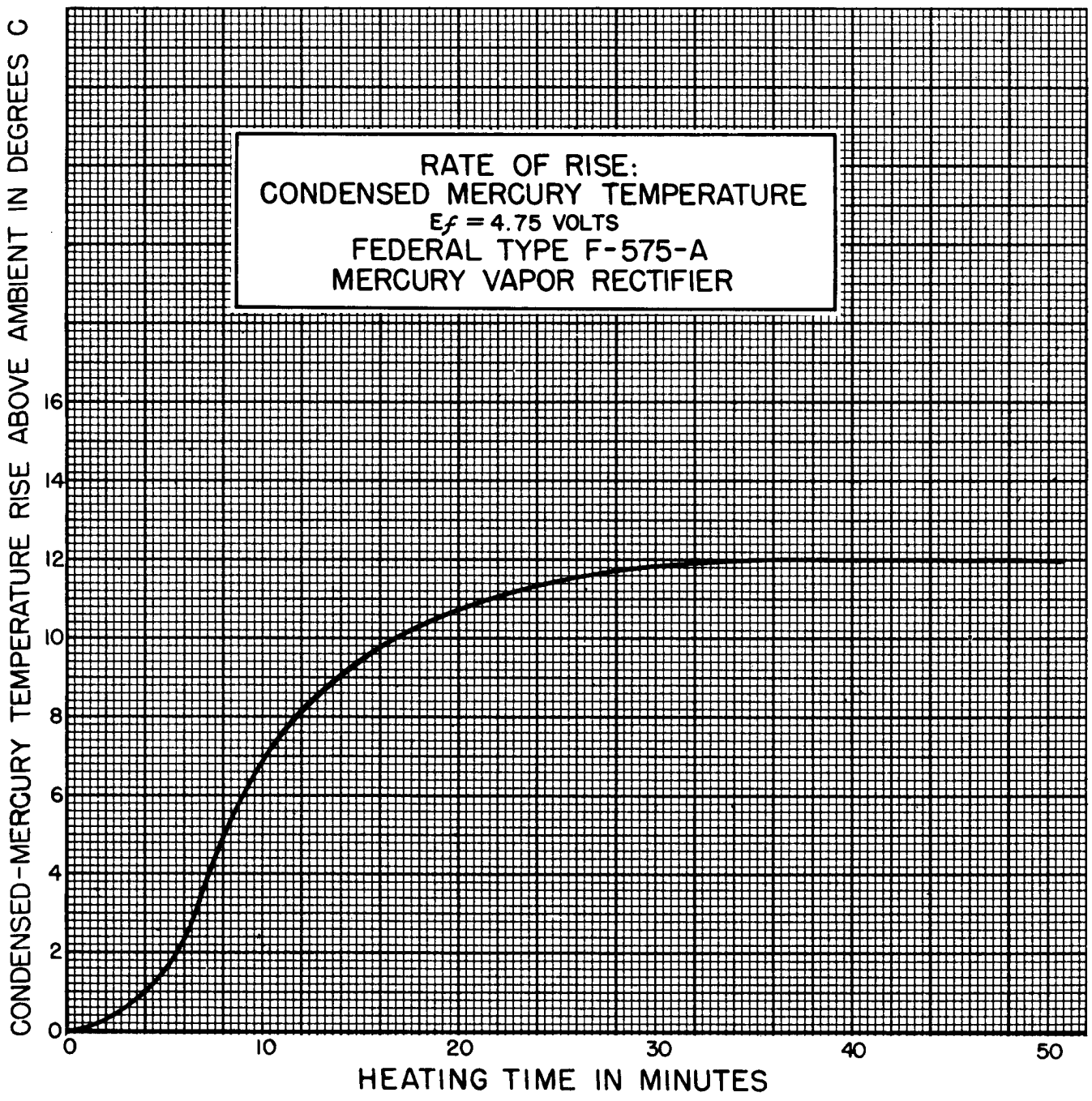

FEDERAL MERCURY VAPOR HALF-WAVE RECTIFIER Type F-575-A

Federal Rectifiers are not a mass-production item. Actually, they are custom-built . . . "the made-to-order tube."

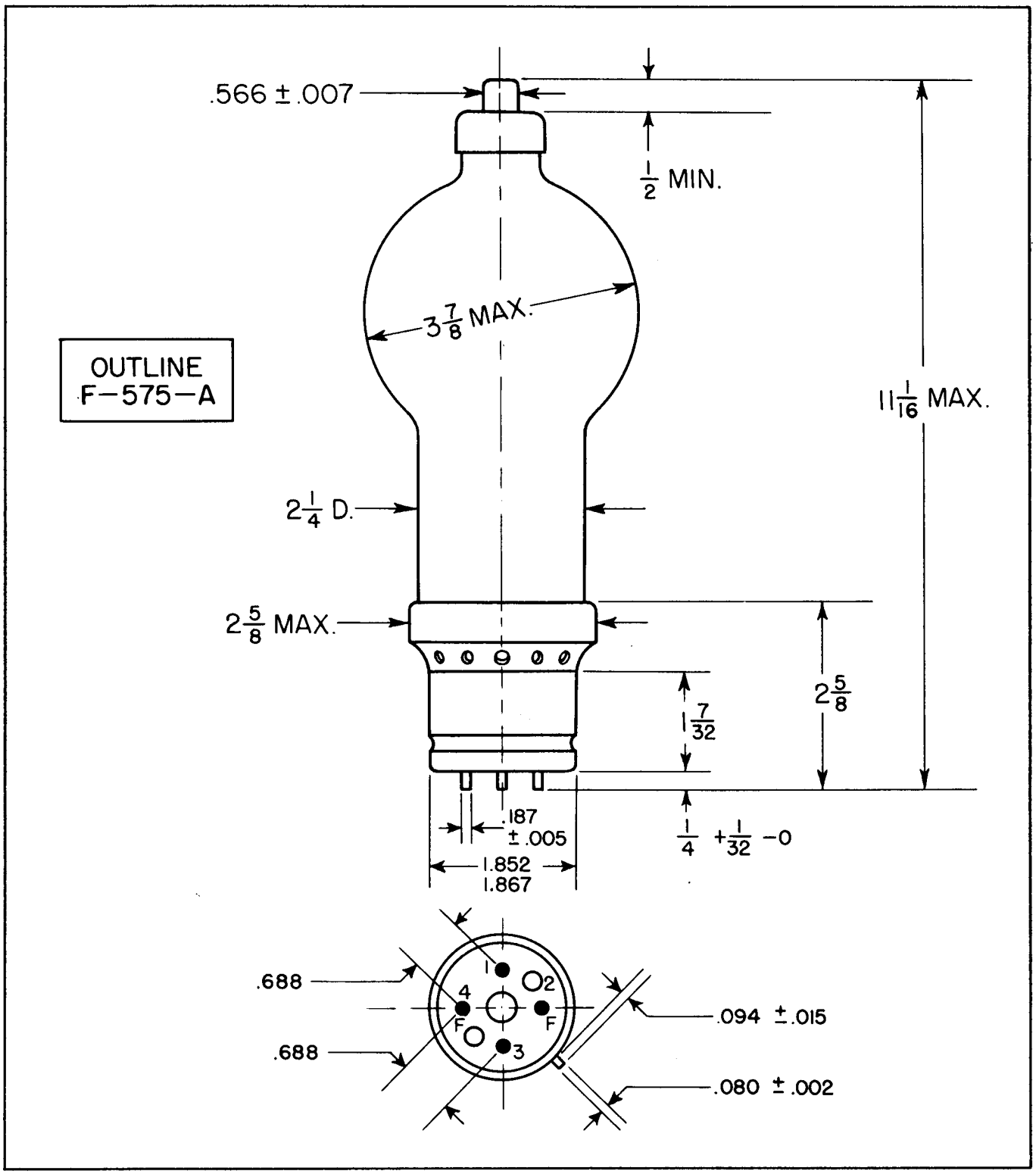

Form FJ-216. Printed in U. S. A.

Federal Telephone and Radio Corporation
100 Kingsland Road Clifton, New Jersey

FEDERAL POWER TRIODE
Type F-631-A
25 Kilowatts Plate Dissipation

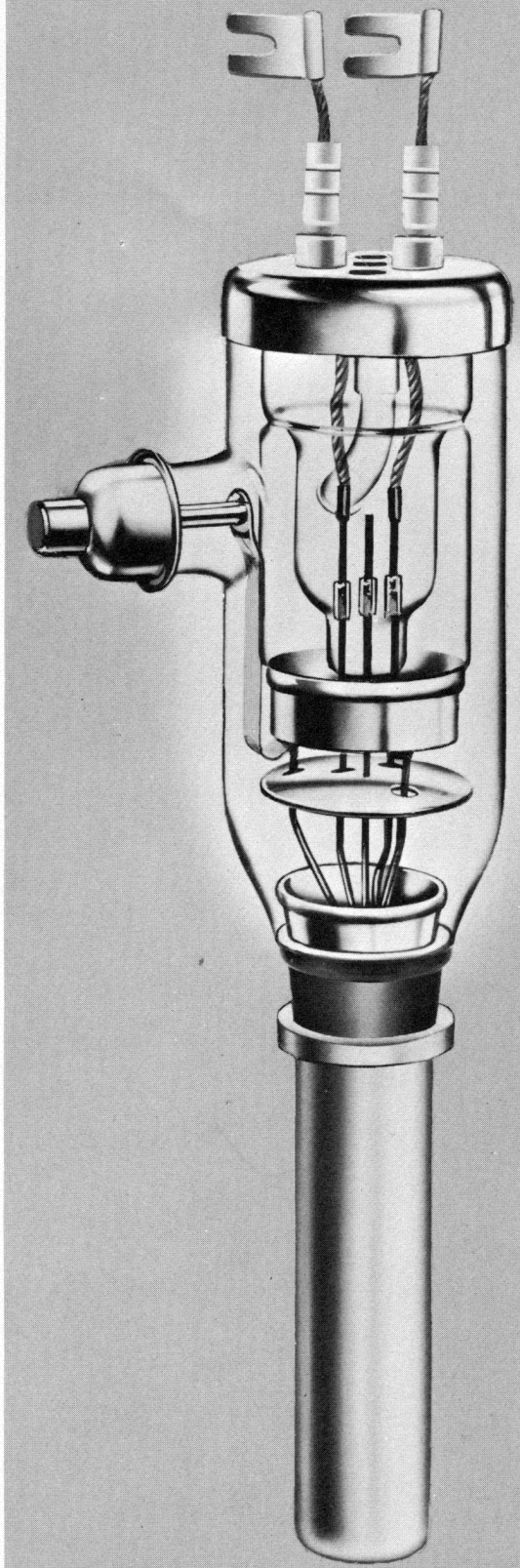

GENERAL DATA

DESCRIPTION:

Federal's F-631-A is a three-electrode tube designed for use as a radio-frequency power amplifier and Oscillator. The anode is water-cooled, capable of dissipating 25 kilowatts. The cathode is a pure tungsten filament. Maximum ratings apply up to 3 megacycles, with operation permissible up to 20 megacycles at reduced rating.

Electrical:

▶ Filament Voltage	28 Volts
▶ Filament Current	51 Amperes
▶ Filament Starting Current	102 Amperes
▶ Peak Cathode Current	12.5 Amperes
▶ Amplification Factor, at I_b=0.75 amp. E_c=—300 volts	40
▶ Interelectrode Capacitances	
Grid-Plate	30 $\mu\mu$f
Grid-Filament	20 $\mu\mu$f
Plate-Filament	2.7 $\mu\mu$f

Mechanical:

▶ Mounting Position— Vertical, Anode Down	
▶ Type of Cooling—Water	
Water Flow on Anode	10 GPM
Maximum Outgoing Water Temperature	70° C
Maximum Glass Temperature	150° C
▶ Net Weight, approximate	4 Lbs.

For Maximum Ratings, Typical Operating Conditions and Characteristic Curves, see Type F-110-X.

Copyright 1953, Federal Telephone and Radio Company

FEDERAL POWER TRIODE
Type F-631-A
25 Kilowatts Plate Dissipation

That Federal tubes, by their performance, largely sell themselves, is a tribute to the product and to the manufacturer.

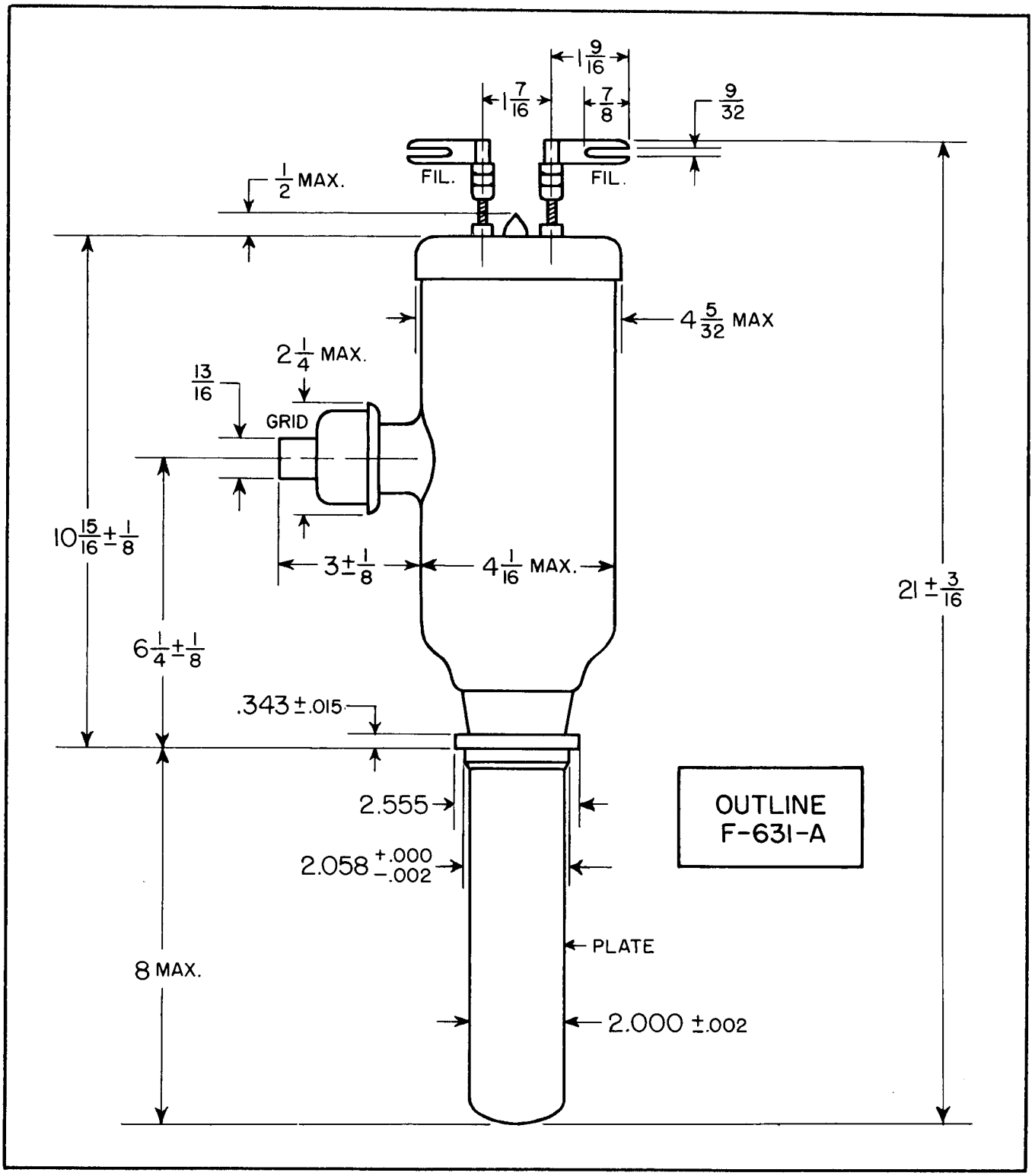

Form F-599 Printed in U. S. A.

DIVISION OF I T & T

Federal Telephone and Radio Company
100 Kingsland Road Clifton, New Jersey

ITT ELECTRON TUBE DIVISION
BOX 100 EASTON, PA 18043
INTERNATIONAL TELEPHONE AND TELEGRAPH CORPORATION

F-820
F-821
F-822A
F-823
TRIGGERED SPARK GAPS

The triggered spark gaps are designed for electronic crowbar applications and for energy transfer. The ceramic-metal device is compact, rugged and will operate over a wide range of temperatures without heater power.

The gaps contain two primary high power electrodes and a trigger electrode which is generally fired through a step-up pulse transformer by a simple low energy pulse. The trigger probe and main electrodes are processed from basic materials which possess special refractory characteristics to insure long life and reliable performance.

Particular care has been taken in the internal design of the spark gaps whereby E field stresses are minimized to provide maximum reliable high voltage hold-off capability.

ELECTRICAL DATA	F-820	F-821	F-822A	F-823	
Operating Range	10.0-24.0	6.0-16.0	12.0-36.5*	2.0-5.0	KV
Static Breakdown Potential	30.0	19.0	42.0*	7.5	KV
Trigger Potential	15.0	15.0	20.0	15.0	KV
Energy Discharge	2500	2500	2500	2500	Joules
Peak Current	100,000	100,000	100,000	100,000	a
Delay Time	0.05	0.04	0.05	0.08	usec

* - The F-822A will hold off 30KV without external breakdown. For voltages higher than this, the gap must be immersed in oil or freon or sulfur hexafluoride atmosphere.

Optimum mode of operation:

Trigger pulse positive and opposite electrode negative. (Mode A)

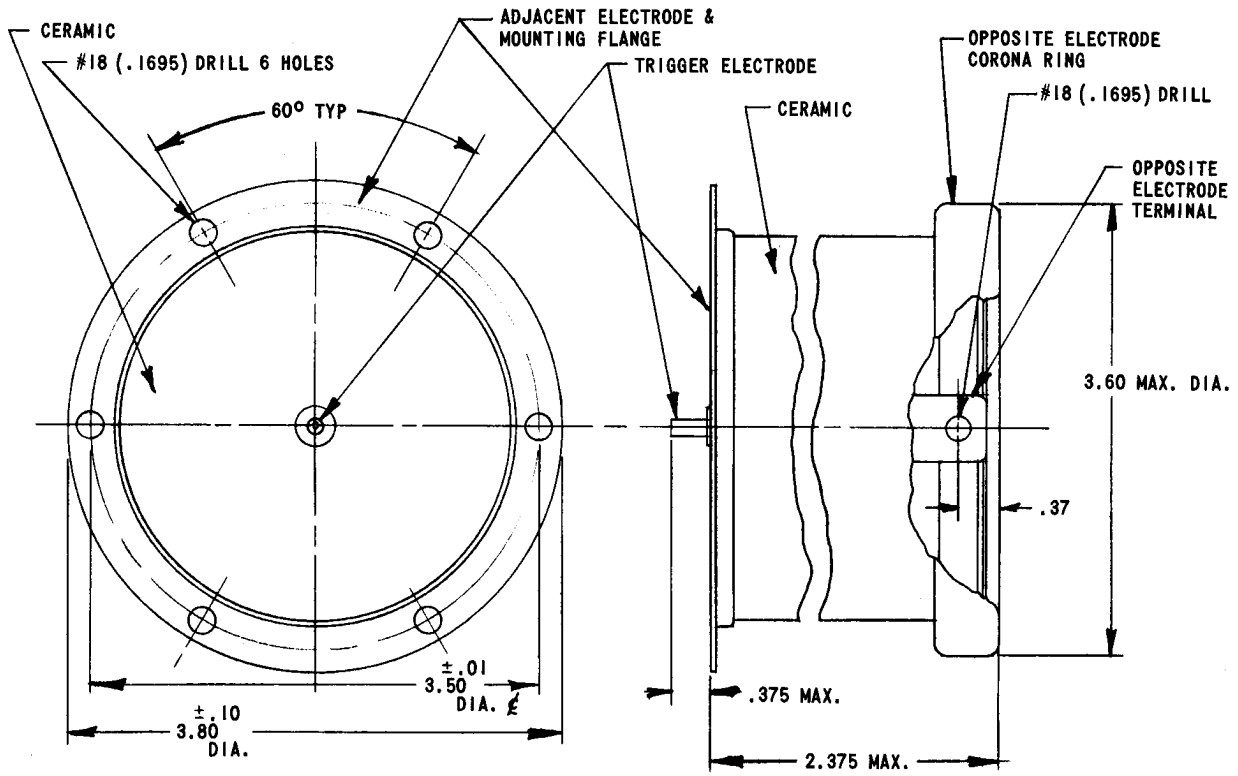

9/65

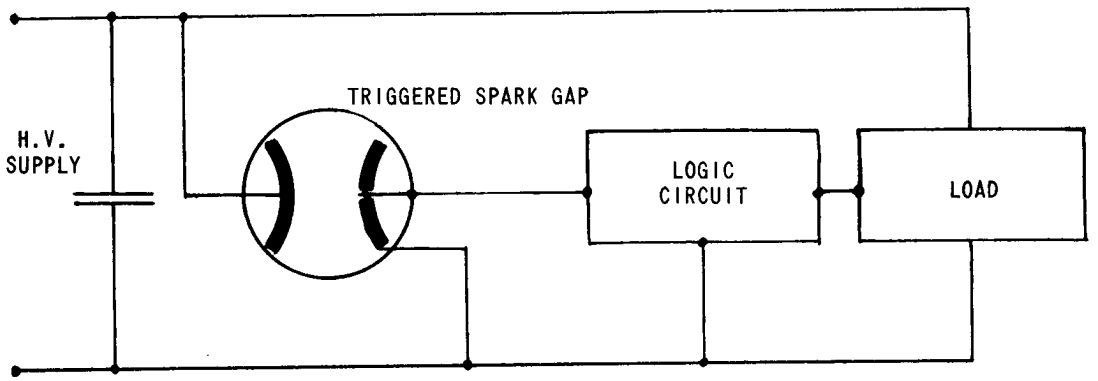

TYPICAL CROWBAR CIRCUIT FOR PROTECTION OF MICROWAVE TUBES AND OTHER CIRCUIT COMPONENTS FROM RF OVERLOAD OR ARCING

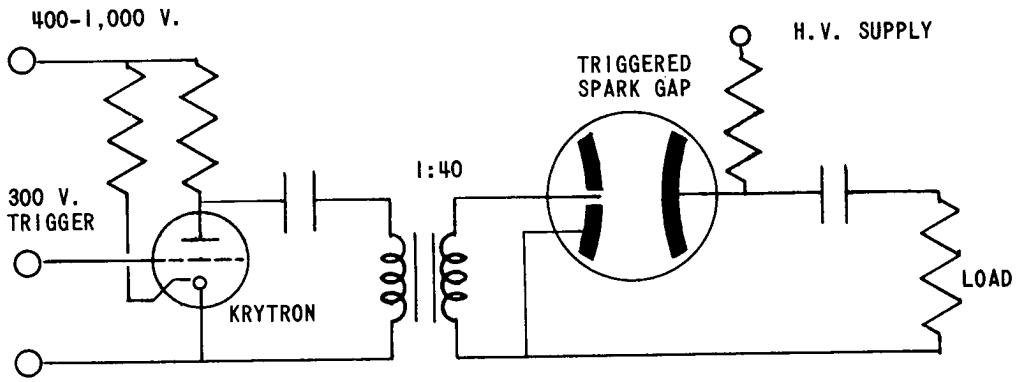

CONVENTIONAL TRIGGER AND DISCHARGE CIRCUIT

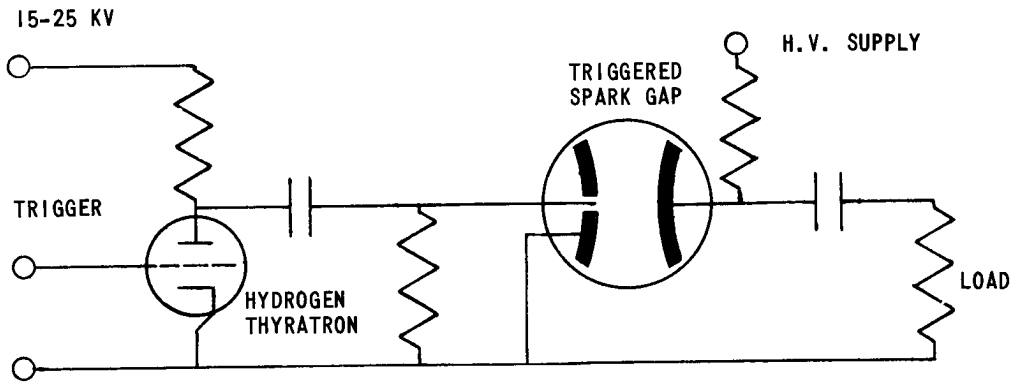

FAST RISE THYRATRON TRIGGER CIRCUIT

FEDERAL MERCURY VAPOR Half-Wave Rectifier Type F-857-B

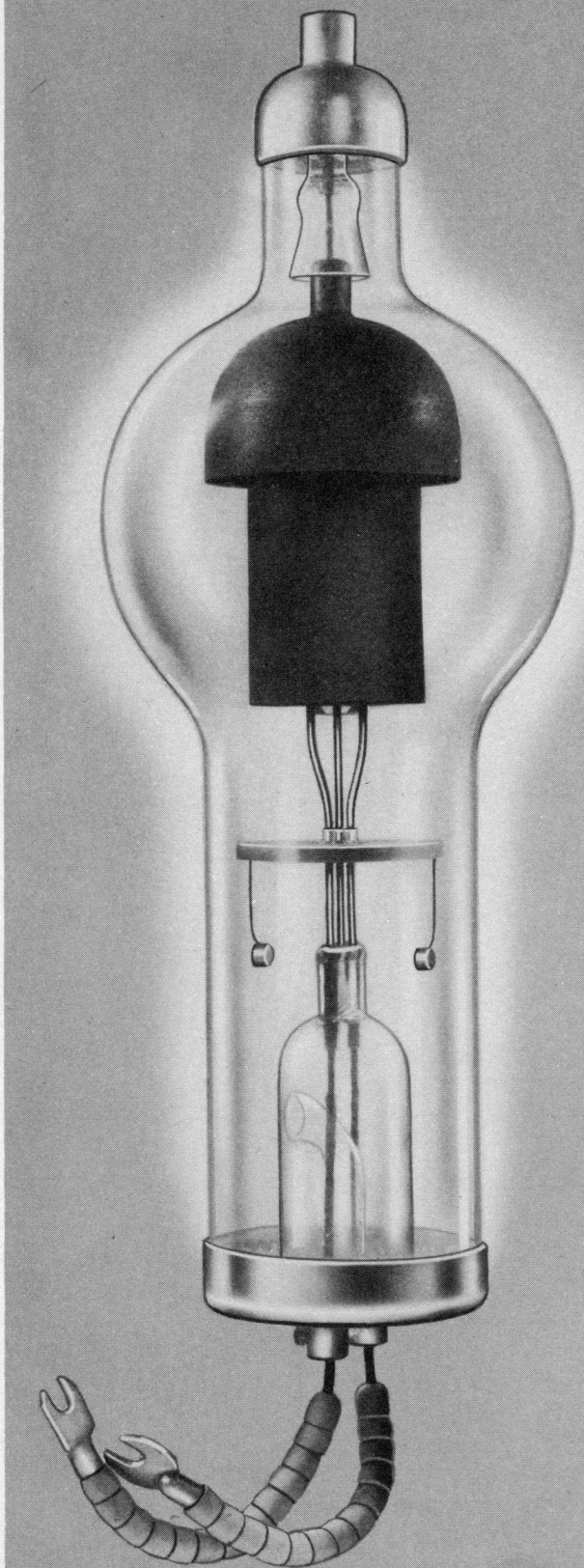

GENERAL DATA

DESCRIPTION:

Federal's F-857-B is a mercury vapor, half-wave rectifier for use in high-voltage rectifier circuits.

Electrical:

Filament Voltage	5 Volts
Filament Current	30 Amperes
Cathode Heating Time Required	60 Seconds
Anode Voltage Drop	15 Volts
Critical Anode Voltage	100 Volts

Mechanical

Type of Cooling—Convection or Forced Air	
Equilibrium Condensed Mercury Temperature Rise Over Ambient	
No Load—Approx.	11.5 Centigrade
Full Load—Approx.	15 Centigrade
Mounting Position—Vertical, Base Down	
Net Weight, Maximum	3.8 Pounds

Maximum Ratings, Absolute Values:

Maximum Peak Inverse Anode Voltage	10,000	22,000 Volts
Condensed Mercury Temperature Limits	25 to 60	30 to 40 Centigrade
Max. Cathode Current		
Peak	40	40 Amperes
Average	10	10 Amperes
Surge (maximum duration 0.2 sec.)	400	400 Amperes
Max. Averaging Time	30	30 Seconds
Max. Frequency	150	150 Cycles/sec.

Copyright 1950, Federal Telephone and Radio Corporation

FEDERAL MERCURY VAPOR
Half-Wave Rectifier
Type F-857-B

To the complete satisfaction of the user, Federal tubes are doing the work they were designed to do, doing it longer, better, more economically.

TYPICAL RECTIFIER CIRCUITS

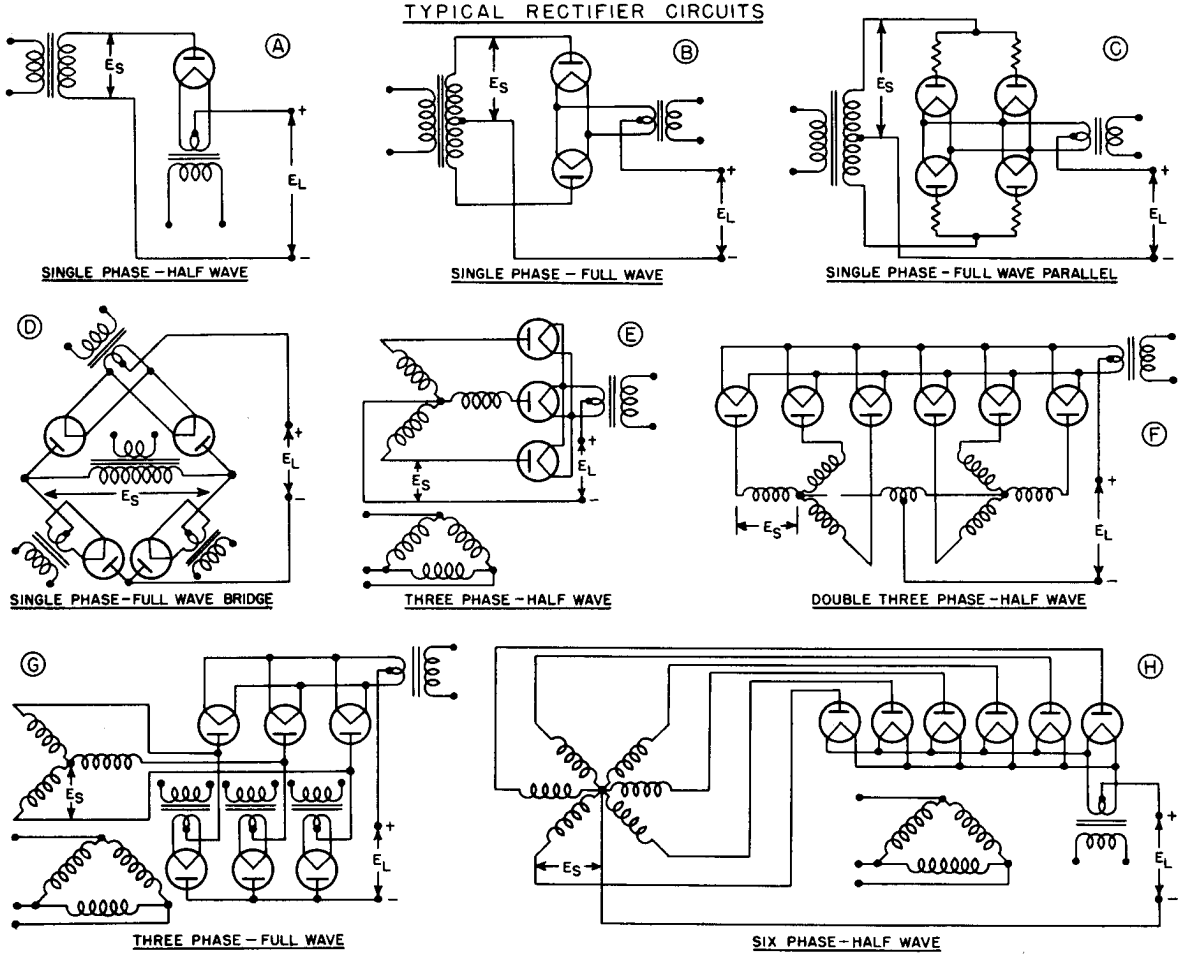

TYPICAL OPERATION FOR MAXIMUM OUTPUT*

Circuit	R.M.S Trans. Sec. Volt. (E_S)	DC Voltage to Filter (E_L)	Max. DC Load Current
A	15,500	7,000	10
B	7,750	7,000	20
C	7,750	7,000	40
D	15,500	14,000	20
E	9,000	10,500	30
F	9,000	10,500	60
G	9,000	21,000	30
H	7,750	10,500	60

*For sine wave input and choke input filter to maintain output current substantially constant.

An IT&T Associate

Tube performance is the yardstick by which most Federal customers measure the extent of their satisfaction. It is significant, that they are all "old" customers.

FEDERAL MERCURY VAPOR Half-Wave Rectifier Type F-857-B

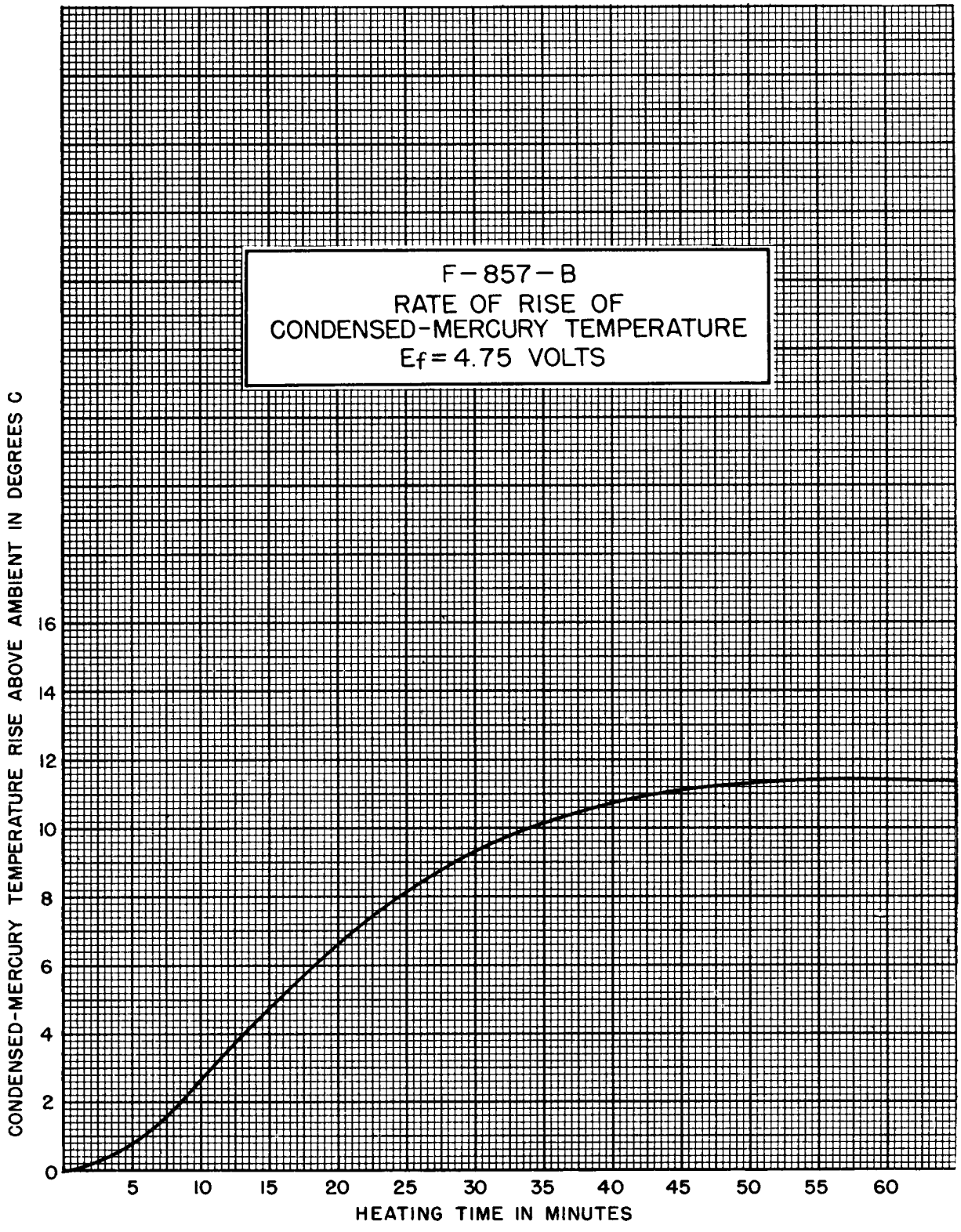

FEDERAL MERCURY VAPOR
Half-Wave Rectifier
Type F-857-B

Authentic designs, finer materials, improved manufacturing processes, and an experienced personnel . . . these are the factors which tell why Federal always has made better tubes.

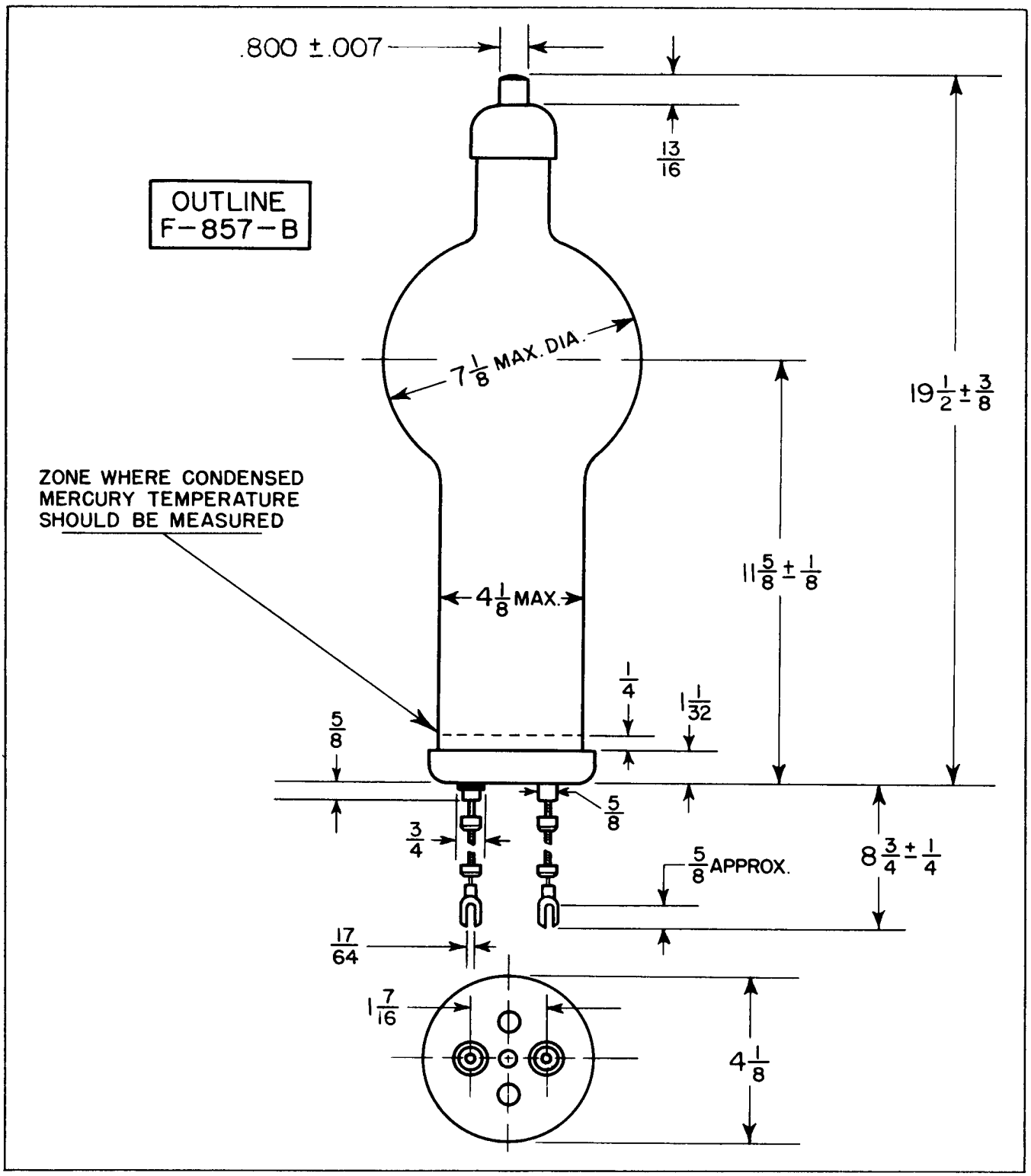

Form FJ-188 Printed in U. S. A.

An IT&T Associate

Federal Telephone and Radio Corporation
100 Kingsland Road Clifton, New Jersey

FEDERAL POWER TRIODE
Type F-862-A
100 Kilowatts Plate Dissipation

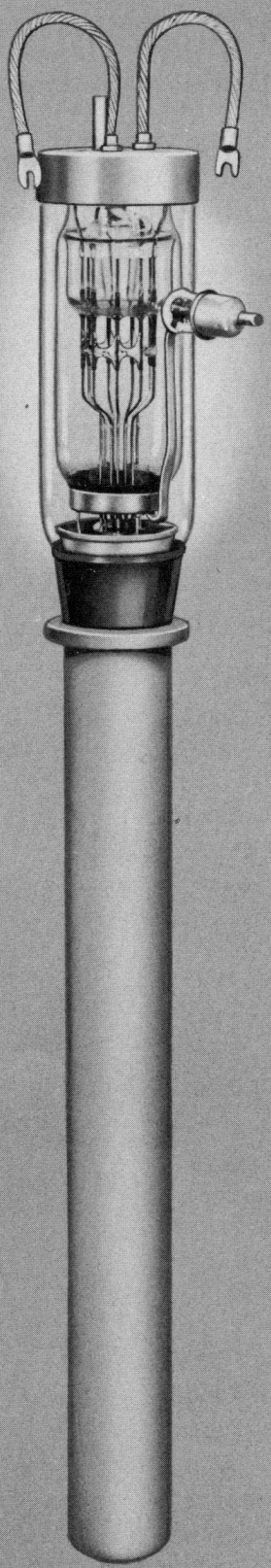

GENERAL DATA

DESCRIPTION:

Federal's F-862-A is a three-electrode tube engineered for use as a radio-frequency amplifier, oscillator, or as a Class B modulator. The water-cooled anode is capable of dissipating 100 kilowatts. The cathode is a pure tungsten filament. Maximum ratings apply up to 1.6 megacycles.

Electrical:

Filament Voltage	33 Volts
Filament Current	207 Amperes
Filament Starting Current	400 Amperes max.
Filament Cold Resistance	.014 Ohms
Amplification Factor, at I_b = 3 amps., E_c = —100 volts	45
Interelectrode Capacitances	
Grid-Plate	64 $\mu\mu$f
Grid-Filament	56 $\mu\mu$f
Plate-Filament	4.7 $\mu\mu$f

Mechanical:

Mounting Position— Vertical, anode down	
Type of Cooling— Water and Forced Air	
Minimum Water Flow on Anode	20 GPM
Maximum Outgoing Water Temperature	70° C
Air Flow (to bulb and seals)	15 CFM
Maximum Glass Temperature	150° C
Net Weight, approximate	37 Pounds

Copyright 1949, Federal Telephone and Radio Corporation

FEDERAL POWER TRIODE
Type F-862-A
100 Kilowatts Plate Dissipation

In all parts of the U. S. A. Federal's F-862-A is giving an excellent account of itself in 50 kilowatt, low level modulated transmitters.

Maximum Ratings and Typical Operating Conditions

AUDIO-FREQUENCY POWER AMPLIFIER AND MODULATOR—CLASS B

Maximum Ratings, Absolute Values

DC Plate Voltage	15,000 Volts
Max. Signal DC Plate Current†	7.5 Amperes
Max. Signal Plate Input†	100 Kilowatts
Plate Dissipation†	50 Kilowatts

Typical Operation

(Unless otherwise specified, values are for two tubes)

DC Plate Voltage	12,000 Volts
DC Grid Voltage	0 Volts
Peak A-F Grid-to-Grid Voltage	2,000 Volts
Zero Signal DC Plate Current	3 Amperes
Max. Signal DC Plate Current	13 Amperes
Effective Load Resistance (plate to plate)	1,800 Ohms
Max. Signal Driving Power, approx.	450 Watts
Max. Signal Power Output, approx.	90 Kilowatts

†Averaged over any audio-frequency cycle of sine-wave form.

RADIO-FREQUENCY POWER AMPLIFIER—CLASS B

(Carrier conditions per tube for use with a maximum modulation factor of 1.0)

Maximum Ratings, Absolute Values

DC Plate Voltage	20,000 Volts
DC Plate Current	5.0 Amperes
Plate Input	100 Kilowatts
Plate Dissipation	75 Kilowatts

Typical Operation

DC Plate Voltage	18,000 Volts
DC Grid Voltage	—200 Volts
Peak R-F Grid Voltage	750 Volts
DC Plate Current	4.2 Amperes
Driving Power, approx.‡	1.1 Kilowatts
Power Output, approx.	25 Kilowatts

‡At crest of audio-frequency cycle with modulation factor of 1.0.

PLATE-MODULATED RADIO-FREQUENCY POWER AMPLIFIER—CLASS C TELEPHONY

(Carrier conditions per tube for use with a maximum modulation factor of 1.0)

Maximum Ratings, Absolute Values

DC Plate Voltage	12,000 Volts
DC Grid Voltage	—3,000 Volts
DC Plate Current	5.0 Amperes
DC Grid Current	1.25 Amperes
Plate Input	60 Kilowatts
Plate Dissipation	50 Kilowatts

Typical Operation

DC Plate Voltage	12,000 Volts
DC Grid Voltage	—800 Volts
Peak R-F Grid Voltage	2,000 Volts
DC Plate Current	5 Amperes
DC Grid Current, approx.	1 Ampere
Driving Power, approx.	2 Kilowatts
Power Output, approx.	45 Kilowatts

RADIO-FREQUENCY POWER AMPLIFIER AND OSCILLATOR—CLASS C TELEGRAPHY

(Key-down conditions per tube without amplitude Modulation)¶

Maximum Ratings, Absolute Values

DC Plate Voltage	20,000 Volts
DC Grid Voltage	—3,000 Volts
DC Plate Current	10 Amperes
DC Grid Current	1.0 Ampere
Plate Input	200 Kilowatts
Plate Dissipation	100 Kilowatts

Typical Operation

DC Plate Voltage	18,000 Volts
DC Grid Voltage	—1,000 Volts
Peak R-F Grid Voltage	2,550 Volts
DC Plate Current	8.33 Amperes
DC Grid Current, approx.	0.9 Amperes
Driving Power, approx.	2.4 Kilowatts
Power Output, approx.	100 Kilowatts

¶Modulation essentially negative may be used if the positive peak of the envelope does not exceed 115 per cent of carrier conditions.

An IT&T Associate

It's the internal construction of the F-862-A and F-898-A which contributes to the *smoother* performance of these Federal tubes in 50 kilowatt Doherty amplifiers.

FEDERAL POWER TRIODE
Type F-862-A
100 Kilowatts Plate Dissipation

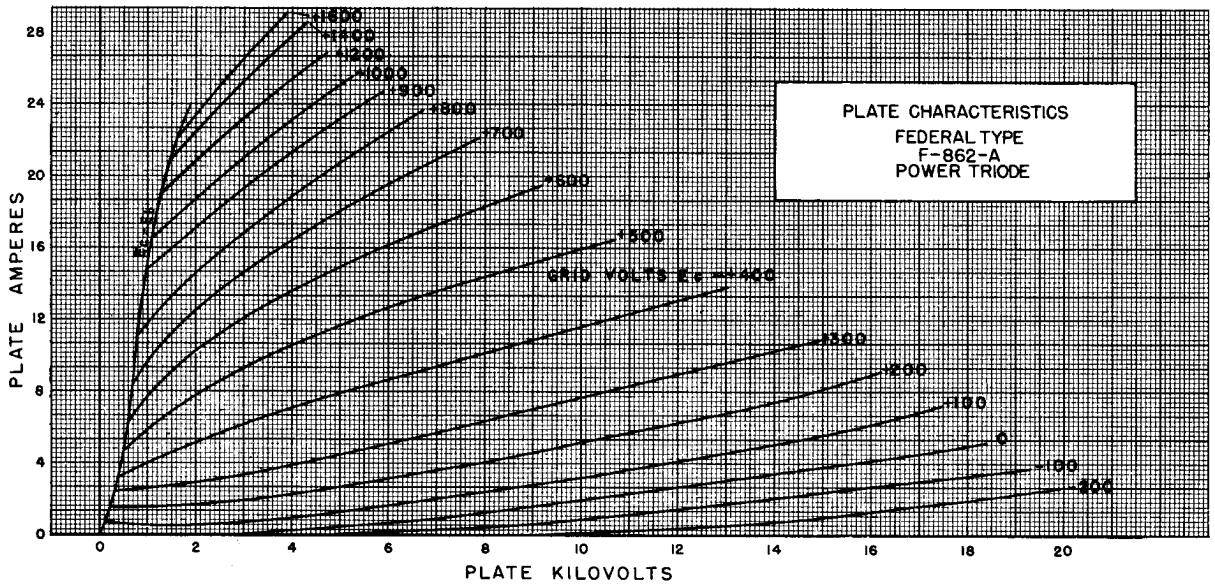

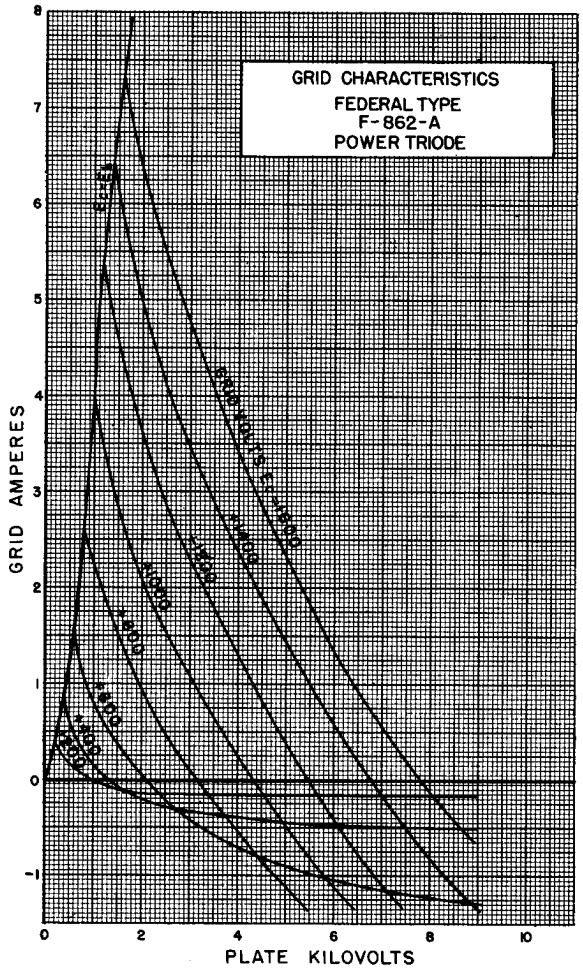

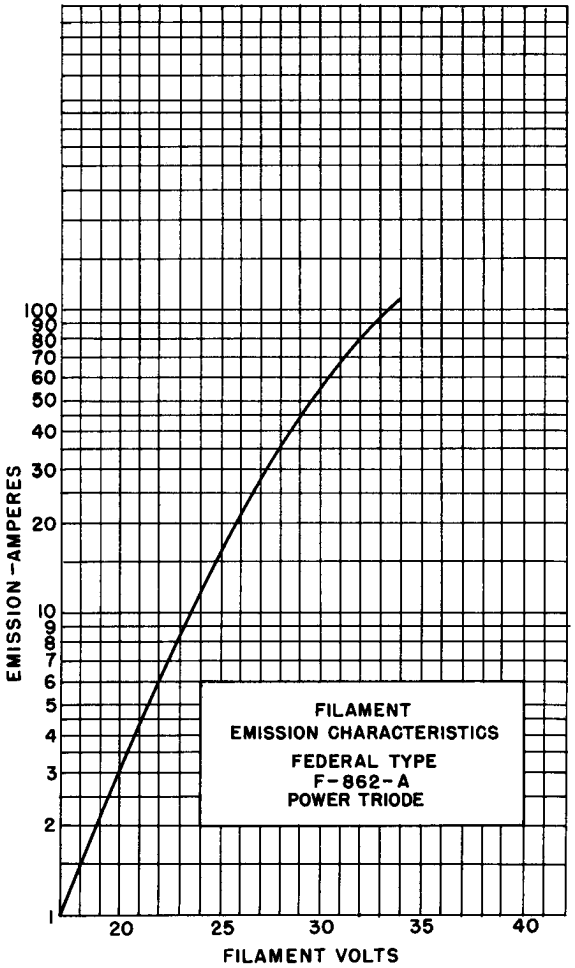

FEDERAL POWER TRIODE
Type F-862-A
100 Kilowatts Plate Dissipation

Federal tubes are precision-designed to meet the specific needs of communications and industrial applications . . . are produced under the most rigid standards of quality-control.

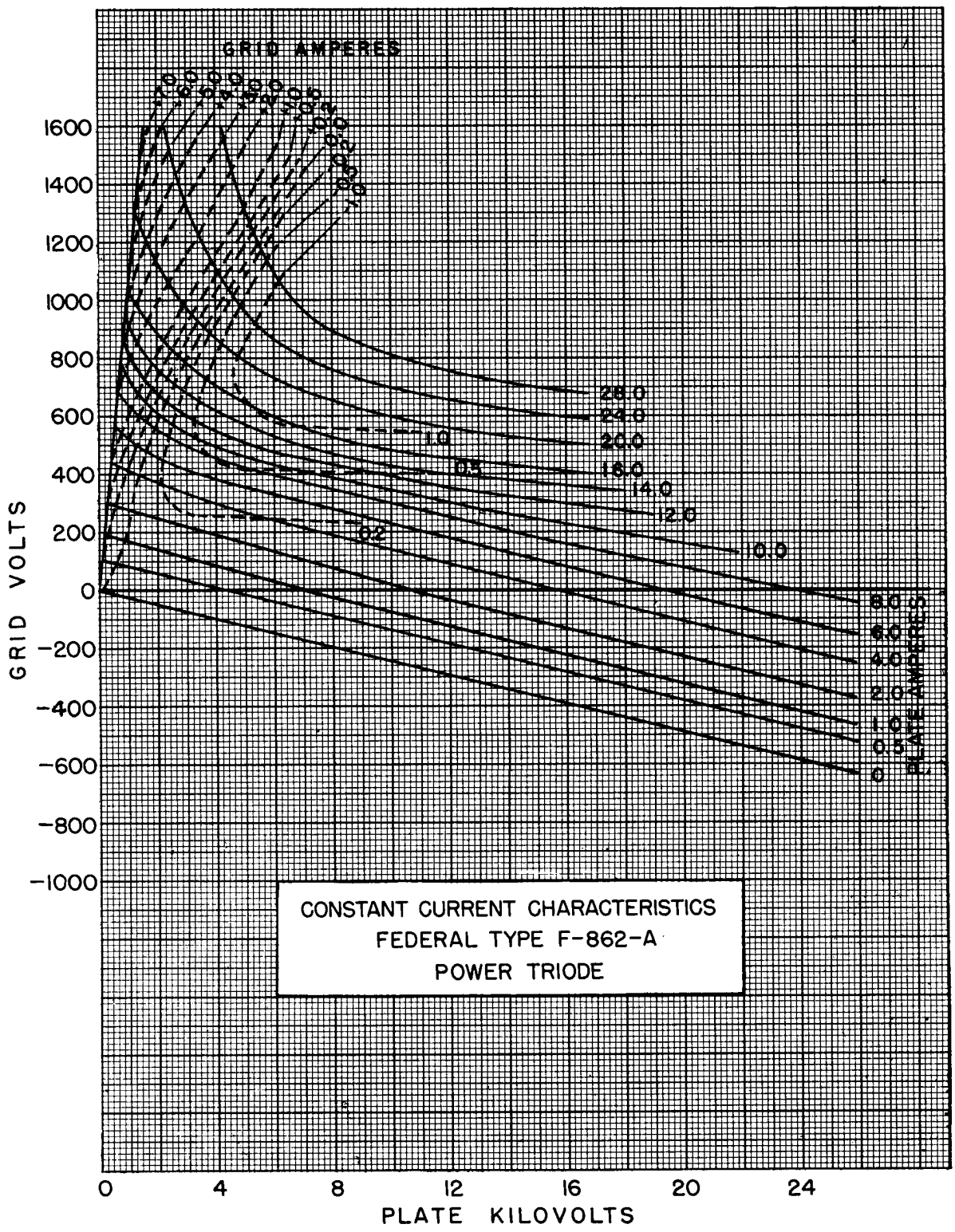

Federal's best tube advertisement is the tube itself, its performance, its service, its long life span.

FEDERAL POWER TRIODE
Type F-862-A
100 Kilowatts Plate Dissipation

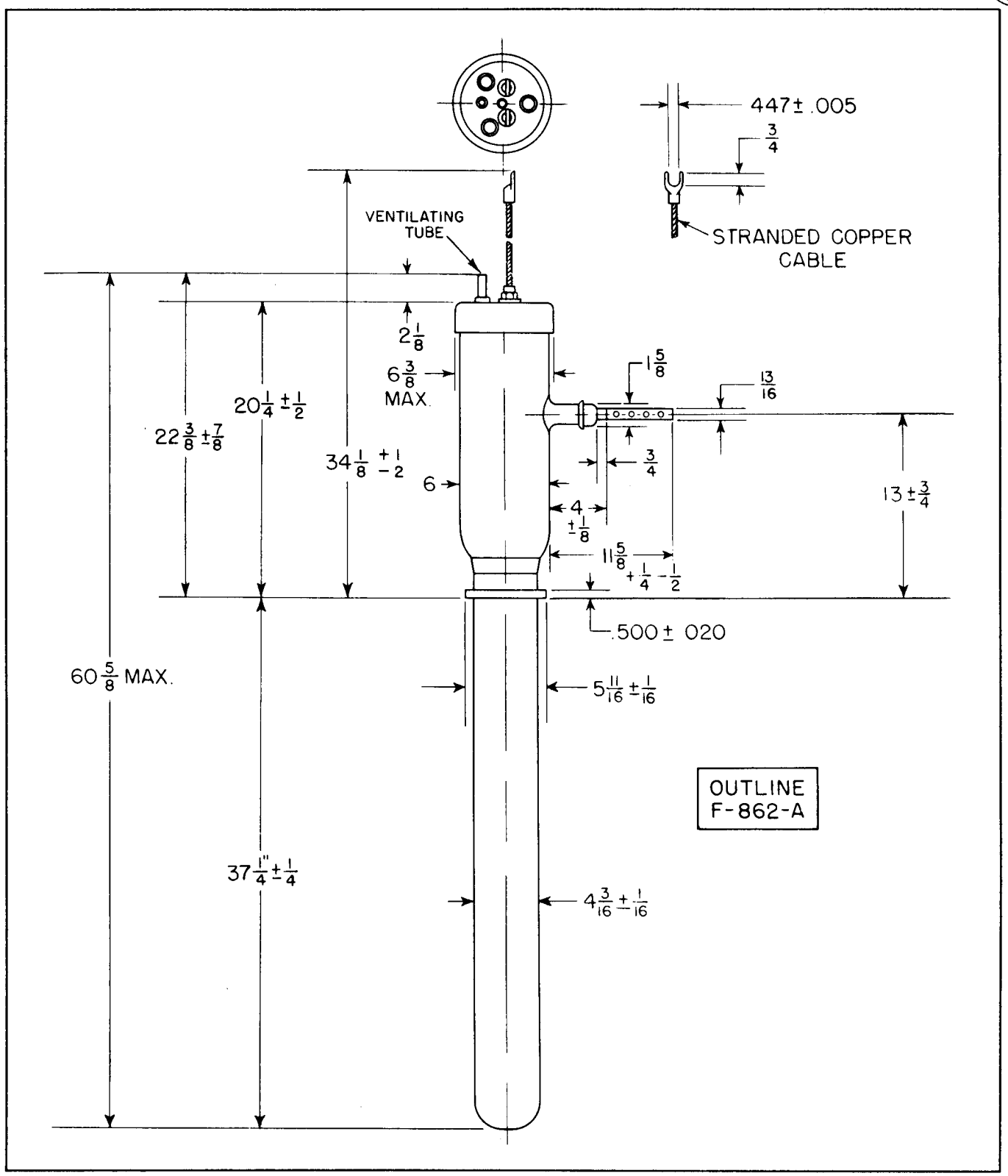

Federal Telephone and Radio Corporation
100 Kingsland Road Clifton, New Jersey

AN IT&T ASSOCIATE

Federal Always Has
Made Better Tubes

Form FJ-156. Printed in U. S. A.

FEDERAL MERCURY VAPOR
Half-Wave Rectifier
Type F-869-B

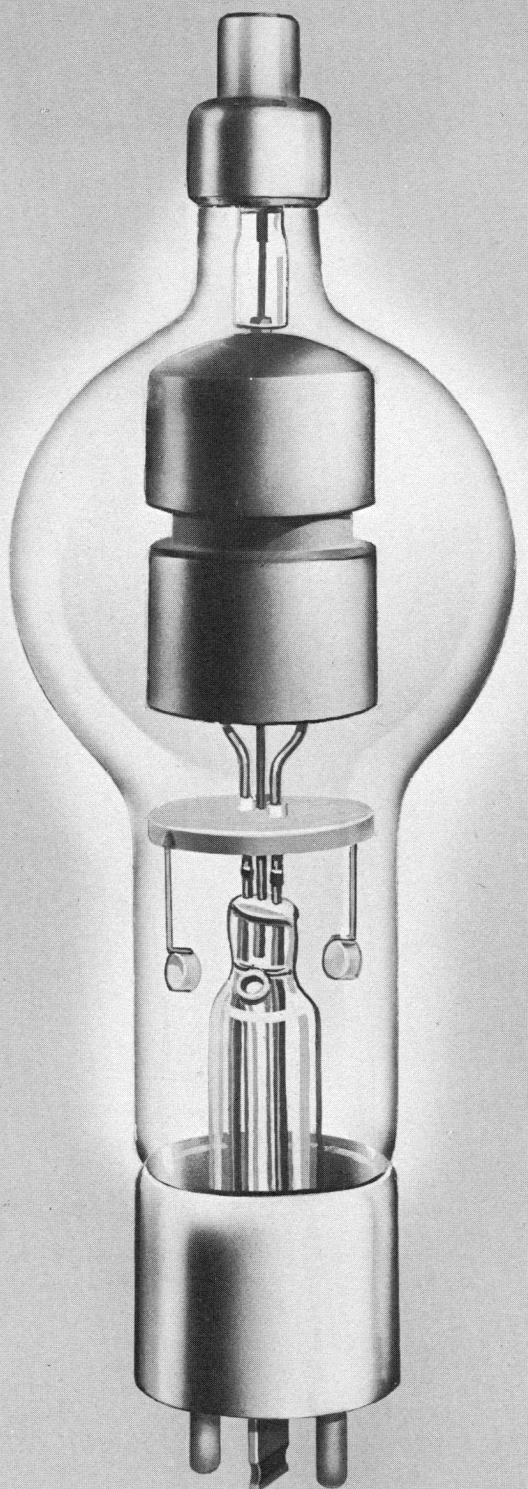

GENERAL DATA

DESCRIPTION:

Federal's F-869-B is a mercury vapor, half-wave rectifier for use in high-voltage rectifier circuits.

Electrical:

Filament Voltage	5 Volts
Filament Current	20 Amperes
Cathode Heating Time Required	60 Seconds
Anode Voltage Drop	15 Volts
Critical Anode Voltage	100 Volts

Mechanical:

Type of Cooling—Convection or Forced Air	
Equilibrium Condensed Mercury Temperature Rise Over Ambient	
No Load—Approx.	15°Centigrade
Full Load—Approx.	20°Centigrade
Mounting Position—Vertical, Base Down	
Net Weight, Maximum	3.8 Pounds

Maximum Ratings, Absolute Values

Maximum Peak Inverse Anode Voltage	15,000	20,000 Volts
Condensed Mercury Temperature Limits	30° to 50°	30° to 40° Centigrade
Max. Cathode Current		
Peak	10	10 Amperes
Average	2.5	2.5 Amperes
Surge (maximum duration 0.1 sec.)	100	100 Amperes
Max. Averaging Time	30	30 Seconds
Max. Frequency	150	150 Cycles/sec.

Copyright 1953, Federal Telephone and Radio Company

FEDERAL MERCURY VAPOR
Half-Wave Rectifier
Type F-869-B

Federal produces tubes of only the highest quality, satisfying the most exacting users.

TYPICAL RECTIFIER CIRCUITS

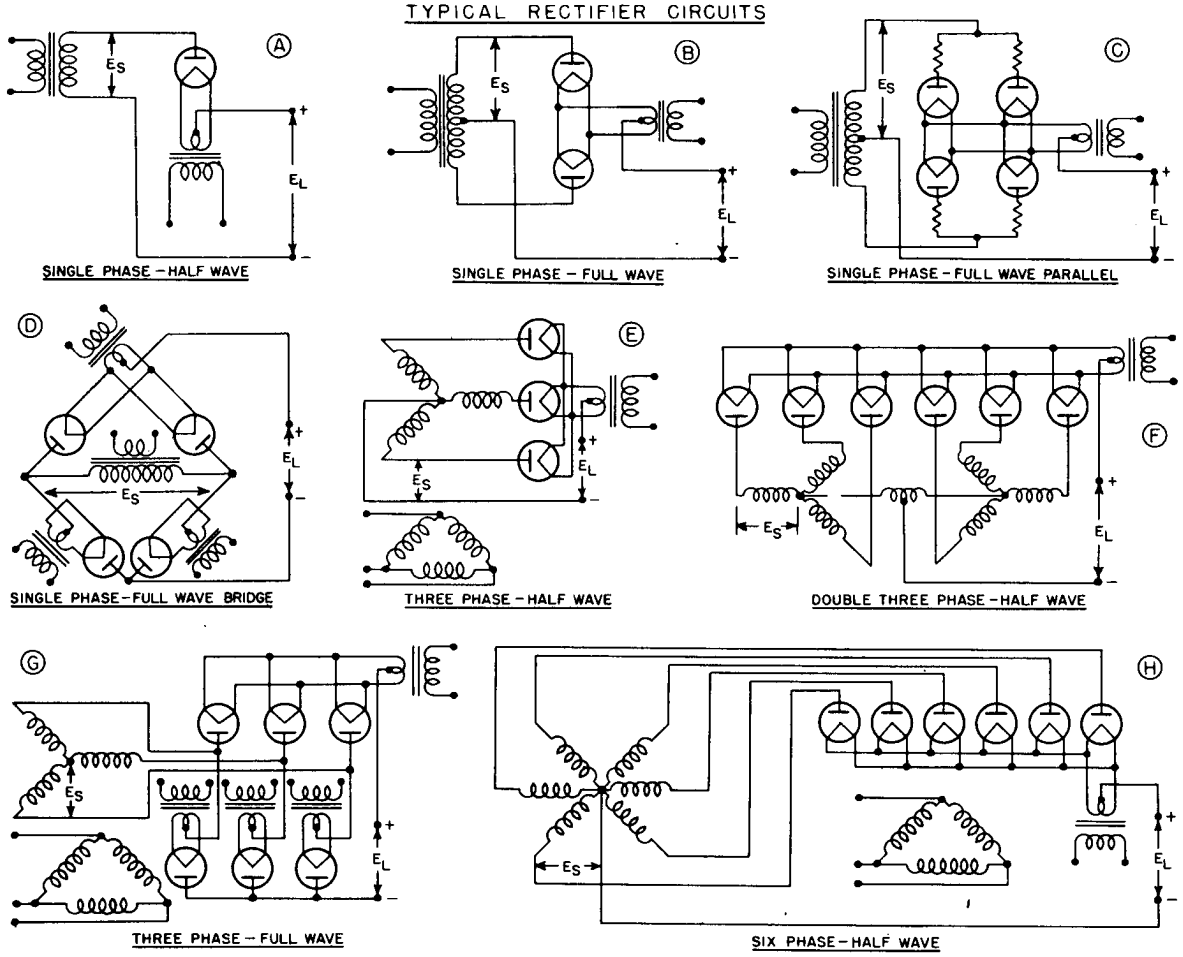

TYPICAL OPERATION FOR MAXIMUM OUTPUT*

Circuit	*R.M.S. Trans. Sec. Volt (E_S)*	*DC Voltage to Filter (E_L)*	*Max. DC Load Current*
A	14,000	6,300	2.5
B	7,000	6,300	5.0
C	7,000	6,300	10.0
D	14,000	12,700	5.0
E	8,100	9,500	7.5
F	8,100	9,500	15
G	8,100	19,000	7.5
H	7,000	9,500	9.5

*For sine wave input and choke input filter to maintain output current substantially constant.

DIVISION OF I T&T

Federal's longer tube life means lower costs. Increase the life of the tubes in your equipment, and unit costs per hour go down.

FEDERAL MERCURY VAPOR
Half-Wave Rectifier
Type F-869-B

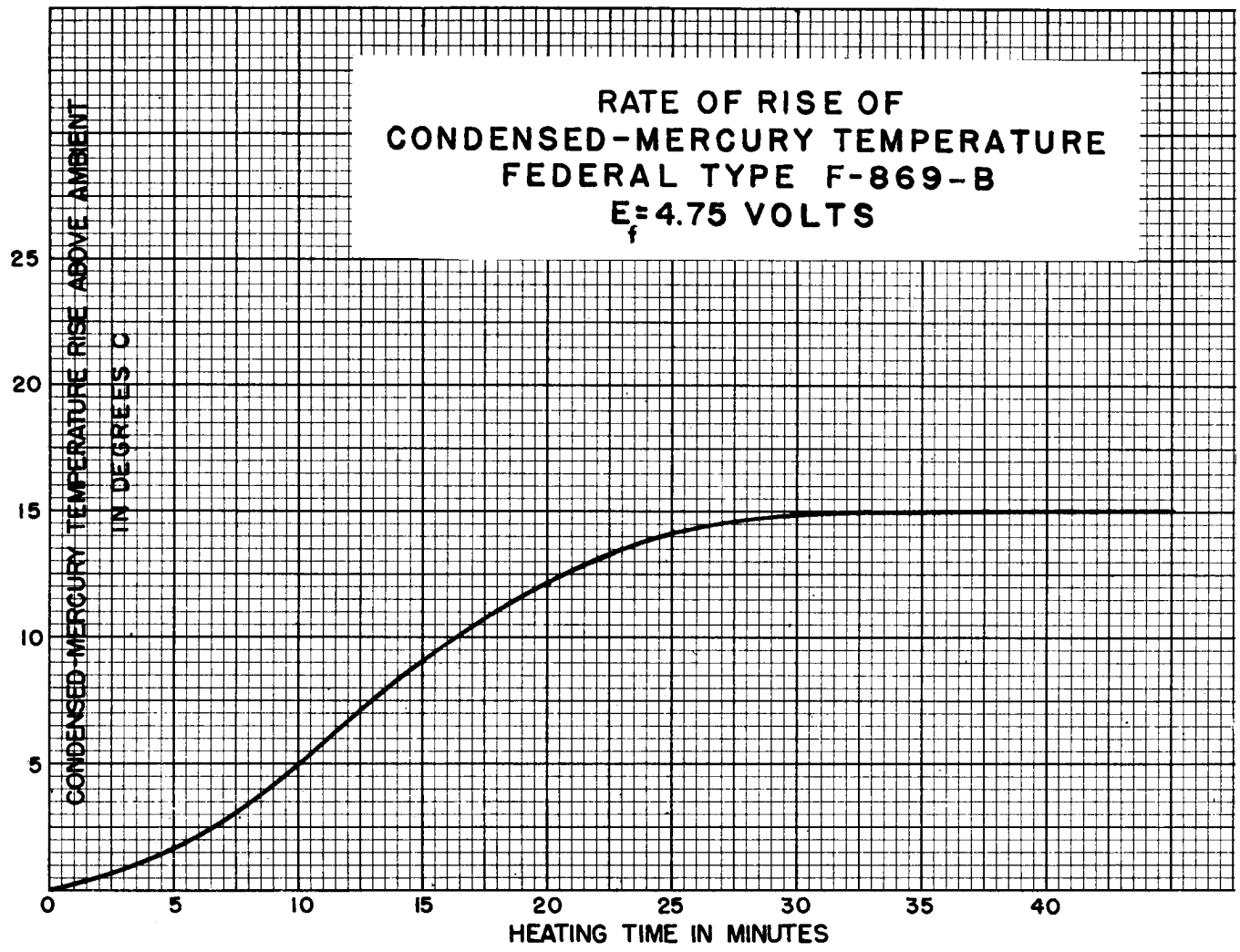

FEDERAL MERCURY VAPOR
Half-Wave Rectifier
Type F-869-B

In *satisfying* the customer and winning his confidence, Federal has reduced tube selling to a formula.

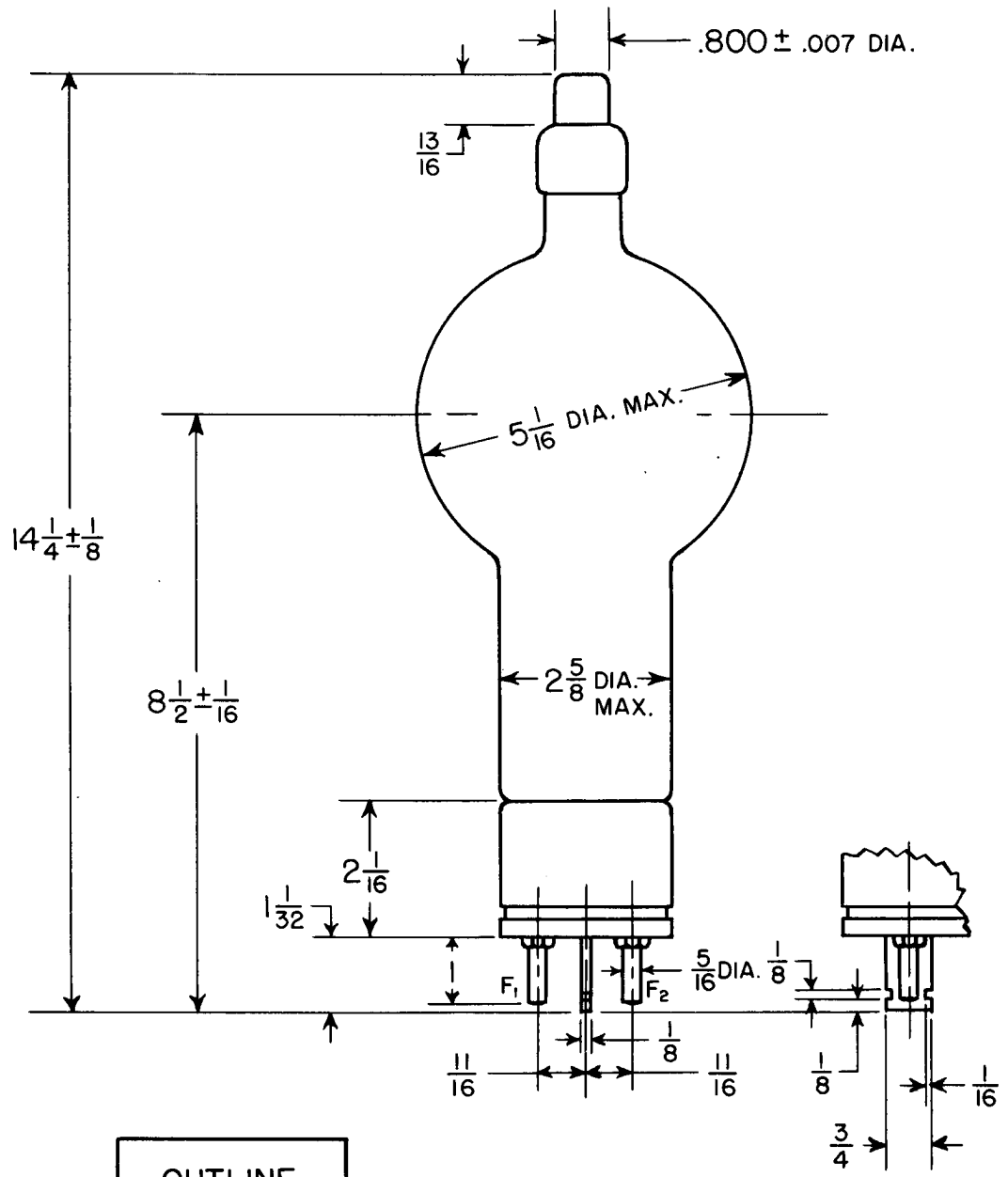

OUTLINE
F-869-B

Form F-597 Printed in U. S. A.

DIVISION OF IT&T

Federal Telephone and Radio Company
100 Kingsland Road Clifton, New Jersey

FEDERAL POWER TRIODE
Type F-880
20 Kilowatts Plate Dissipation

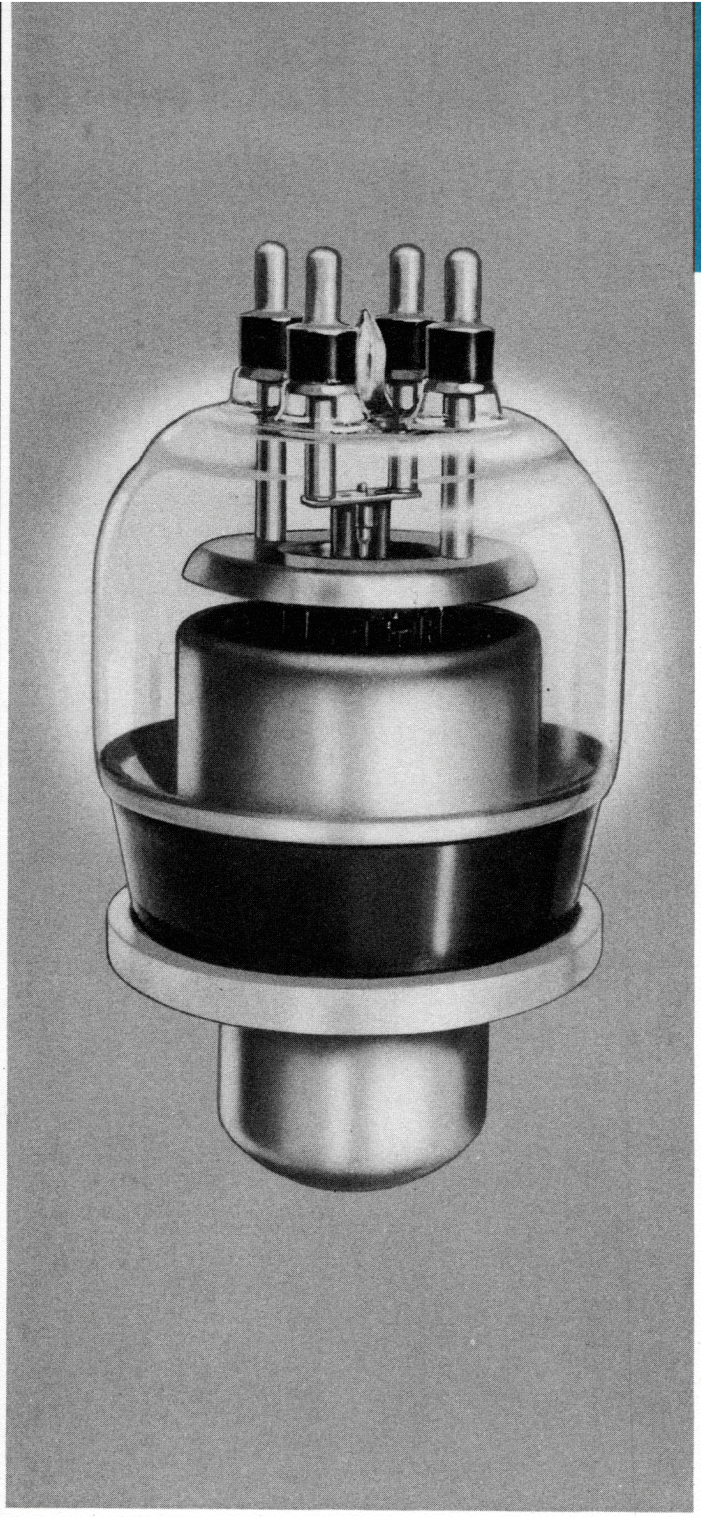

GENERAL DATA

DESCRIPTION:

Federal's F-880 is a three-electrode tube built for use as a radio-frequency amplifier, oscillator, or a Class B modulator. The anode is water-cooled, capable of dissipating 20 kilowatts. The cathode is a pure tungsten filament of individual "hairpin" design, and is spring-loaded to prevent filament bowing. The design of the terminal mount connections and the re-entrant anode minimize lead inductance, make the tube particularly suitable for high-frequency applications up to 25 megacycles at full ratings, 100 megacycles at reduced ratings.

Electrical:

Filament Voltage	12.6 Volts
Filament Current	320 Amperes
Filament Starting Current	480 Amperes max.
Filament Cold Resistance	.003 Ohms
Amplification Factor, at I_b = 2.0 amps., E_c = —100 volts	20
Interelectrode Capacitances	
Grid-Plate	24 $\mu\mu$f
Grid-Filament	35 $\mu\mu$f
Plate-Filament	2 $\mu\mu$f

Mechanical:

Mounting Position— Vertical, anode down	
Type of Cooling— Water and Forced Air	
Water Flow on Anode	20 GPM
Maximum Outgoing Water Temperature	70° C
Air Flow (to bulb and seals) from a 3-inch diameter nozzle	20 CFM
Maximum Glass Temperature	150° C
Net Weight, approximate	7 Pounds

In the development and production of vacuum tubes Federal carries on extensive laboratory experimentation: new techniques, new processes, new applications.

Copyright 1949, Federal Telephone and Radio Corporation

FEDERAL POWER TRIODE
Type F-880
20 Kilowatts Plate Dissipation

Maximum Ratings vs. Operating Frequency

Frequency	25	50	100 Megacycles
Percentage of Maximum Rated Plate Voltage and Plate Input			
Class B—Max. Plate Voltage	100	80	60 Per Cent
Max. Plate Input	100	94	75 Per Cent
Class C—Plate Modulated	100	72	45 Per Cent
Class C—Unmodulated	100	75	50 Per Cent

Maximum Ratings and Typical Operating Conditions

AUDIO-FREQUENCY POWER AMPLIFIER AND MODULATOR—CLASS B

Maximum Ratings, Absolute Values

DC Plate Voltage	10,500 Volts
Maximum Signal DC Plate Current†	5 Amperes
Maximum Signal Plate Input†	40 Kilowatts
Plate Dissipation†	15 Kilowatts

Typical Operation

(Unless otherwise specified, values are for two tubes)

DC Plate Voltage	7,500	10,000 Volts
DC Grid Voltage	—340	—450 Volts
Peak A-F Grid-to-Grid Voltage	1,450	1,680 Volts
Zero Signal DC Plate Current	1.0	1.0 Amperes
Maximum Signal DC Plate Current	6.7	7.0 Amperes
Effective Load Resistance, Plate to Plate	2,300	3,100 Ohms
Maximum Signal Driving Power, Approx.	490	540 Watts
Maximum Signal Power Output, Approx.	31.5	46 Kilowatts

†Averaged over any audio frequency cycle of sine-wave form.

RADIO-FREQUENCY POWER AMPLIFIER—CLASS B

(Carrier conditions per tube for use with a maximum modulation factor of 1.0)

Maximum Ratings, Absolute Values

DC Plate Voltage	10,500 Volts
DC Plate Current	4 Amperes
Plate Input	32 Kilowatts
Plate Dissipation	20 Kilowatts

Typical Operation

DC Plate Voltage	7,500	10,000 Volts
DC Grid Voltage	—340	—460 Volts
Peak R-F Grid Voltage	570	595 Volts
DC Plate Current	3.3	2.75 Amperes
DC Grid Current, approximate	.013	.009 Amperes
Driving Power, approximate‡	1,250	900 Watts
Power Output, approximate	8	9 Kilowatts

‡At crest of audio-frequency cycle with modulation factor of 1.0.

PLATE-MODULATED RADIO-FREQUENCY POWER AMPLIFIER—CLASS C TELEPHONY

(Carrier conditions per tube for use with a maximum modulation factor of 1.0)

Maximum Ratings, Absolute Values

DC Plate Voltage	10,500 Volts
DC Grid Voltage	—1,200 Volts
DC Plate Current	3.6 Amperes
DC Grid Current	0.8 Amperes
Plate Input	36 Kilowatts
Plate Dissipation	12 Kilowatts

Typical Operation

DC Plate Voltage	7,500	10,000 Volts
DC Grid Voltage	—1,000	—1,200 Volts
Peak R-F Grid Voltage	1,560	1,840 Volts
DC Plate Current	3.0	3.6 Amperes
DC Grid Current, approximate	0.57	0.64 Amperes
Driving Power, approximate	850	1,100 Watts
Power Output, approximate	16	27 Kilowatts

RADIO-FREQUENCY POWER AMPLIFIER AND OSCILLATOR—CLASS C TELEGRAPHY

(Key-down conditions per tube without amplitude Modulation)¶

Maximum Ratings, Absolute Values

DC Plate Voltage	10,500	15,000* Volts
DC Grid Voltage	—1,200	—1,600* Volts
DC Plate Current	6.0	4.5* Amperes
DC Grid Current	0.8	1.0* Amperes
Plate Input	60	67.5* Kilowatts
Plate Dissipation	20	20* Kilowatts

Typical Operation

DC Plate	7,500	10,000	10,000 Volts
DC Grid Voltage	—600	—800	—1,000 Volts
Peak R-F Grid Voltage	1,250	1,460	1,830 Volts
DC Plate Current	4.8	4.5	6.0 Amperes
DC Grid Current, approximate	0.79	0.78	0.8 Amperes
Driving Power, approximate	920	1,000	1,500 Watts
Power Output, approximate	24	33	40 Kilowatts

¶Modulation essentially negative may be used if the positive peak of the envelope does not exceed 115 per cent of carrier conditions.

*These ratings apply only at a frequency of 1,500 kilocycles or less.

An IT&T Associate

FEDERAL POWER TRIODE
Type F-880
20 Kilowatts Plate Dissipation

The new and improved filament design in Federal's Type F-880 reduces the tendency to filament bowing.

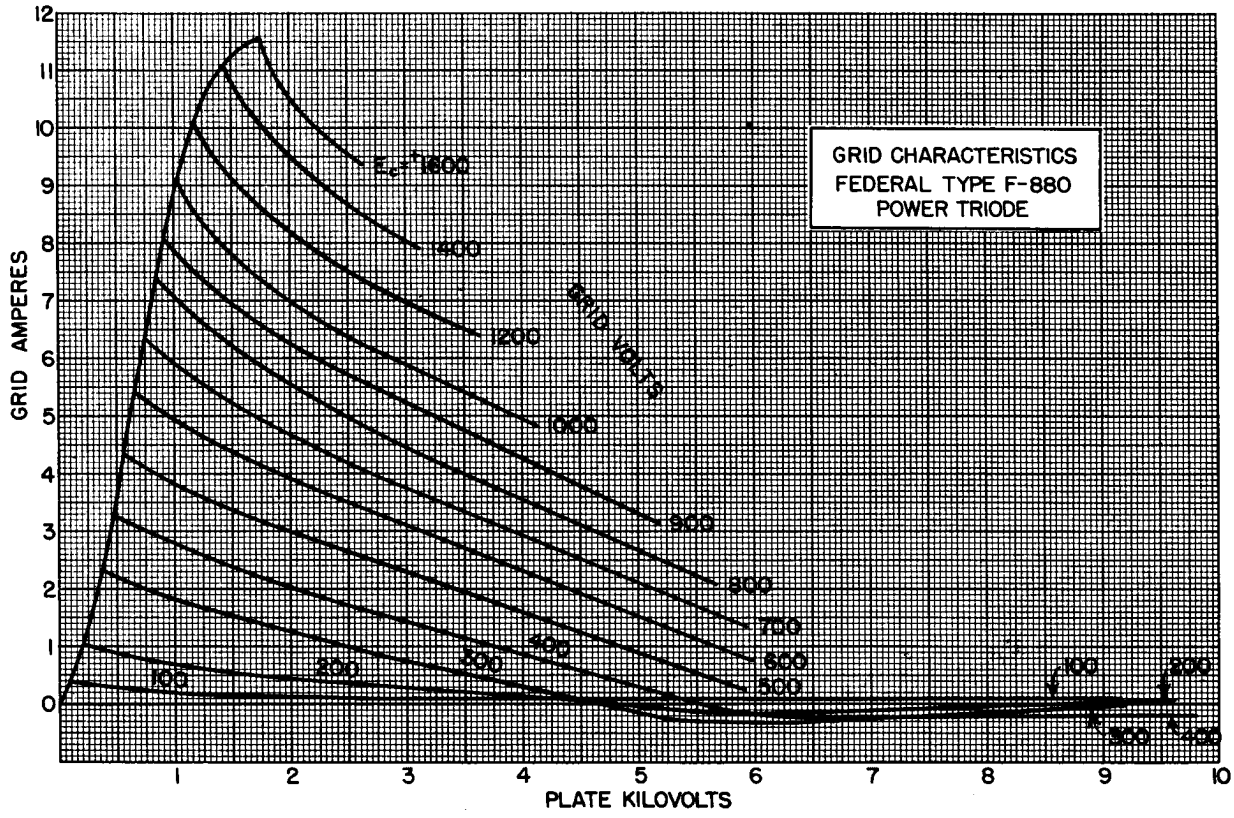

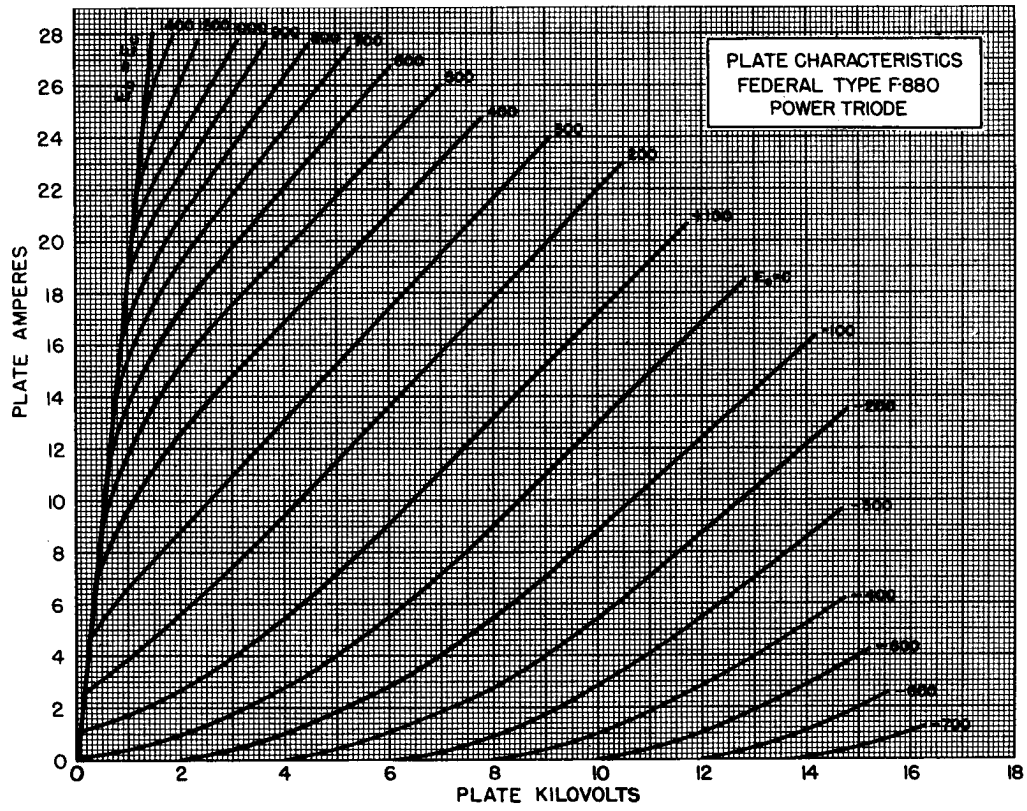

FEDERAL POWER TRIODE
Type F-880
20 Kilowatts Plate Dissipation

Backed by years of engineering and manufacturing experience, Federal tubes have consistently set the world's *standards of performance* in broadcast service.

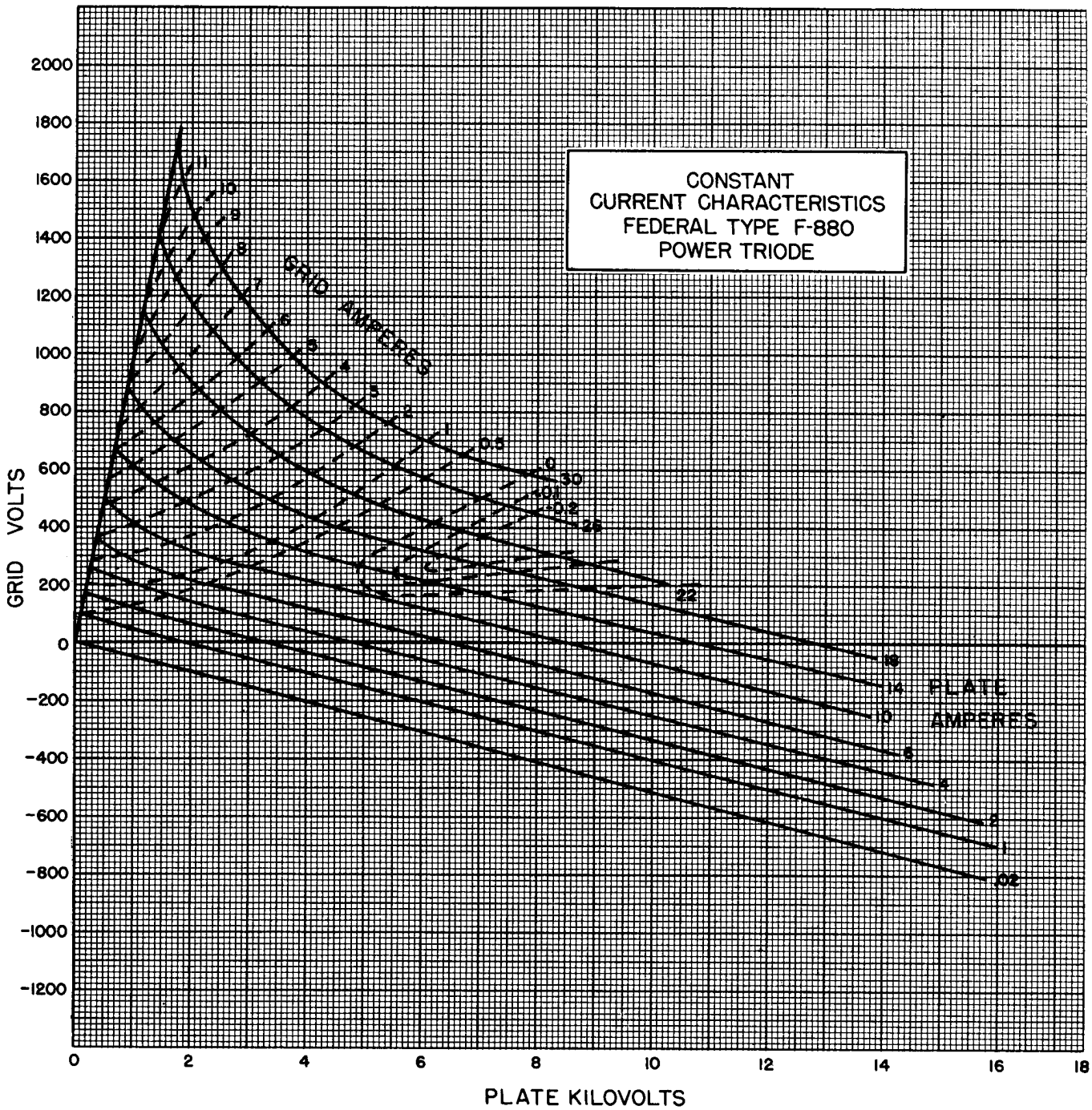

More than 100,000 letters requesting copies of Federal's *Handbook of Tube Operation* have been received from engineers in all parts of the world. Would you care for a copy?

FEDERAL POWER TRIODE
Type F-880
20 Kilowatts Plate Dissipation

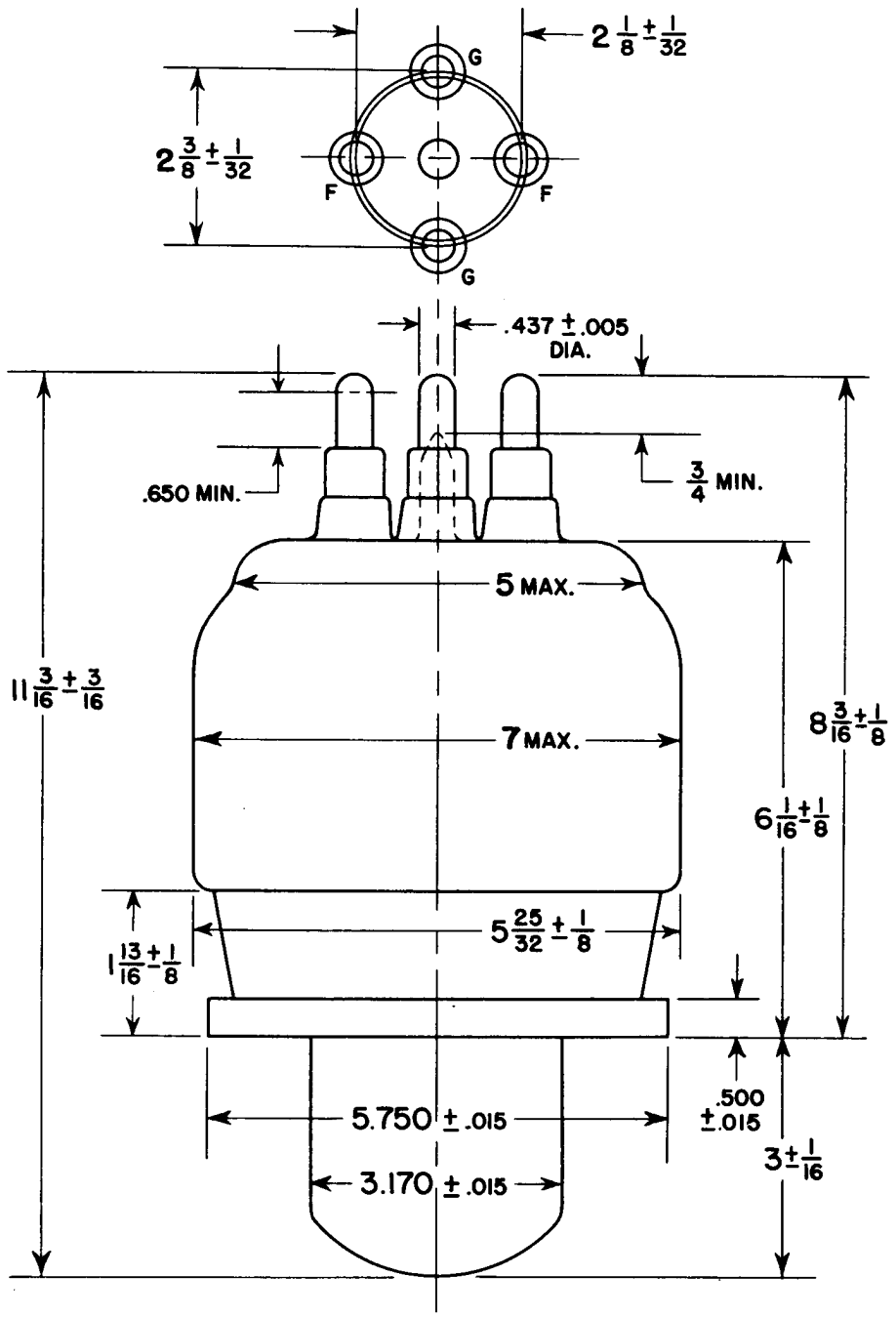

OUTLINE DRAWING
F-880

Federal Telephone and Radio Corporation
100 Kingsland Road Clifton, New Jersey

AN IT&T ASSOCIATE

Federal Always Has
Made Better Tubes

Form FJ-415 Printed in U. S. A.

FEDERAL POWER TRIODE
Type F-891
6 Kilowatts Plate Dissipation

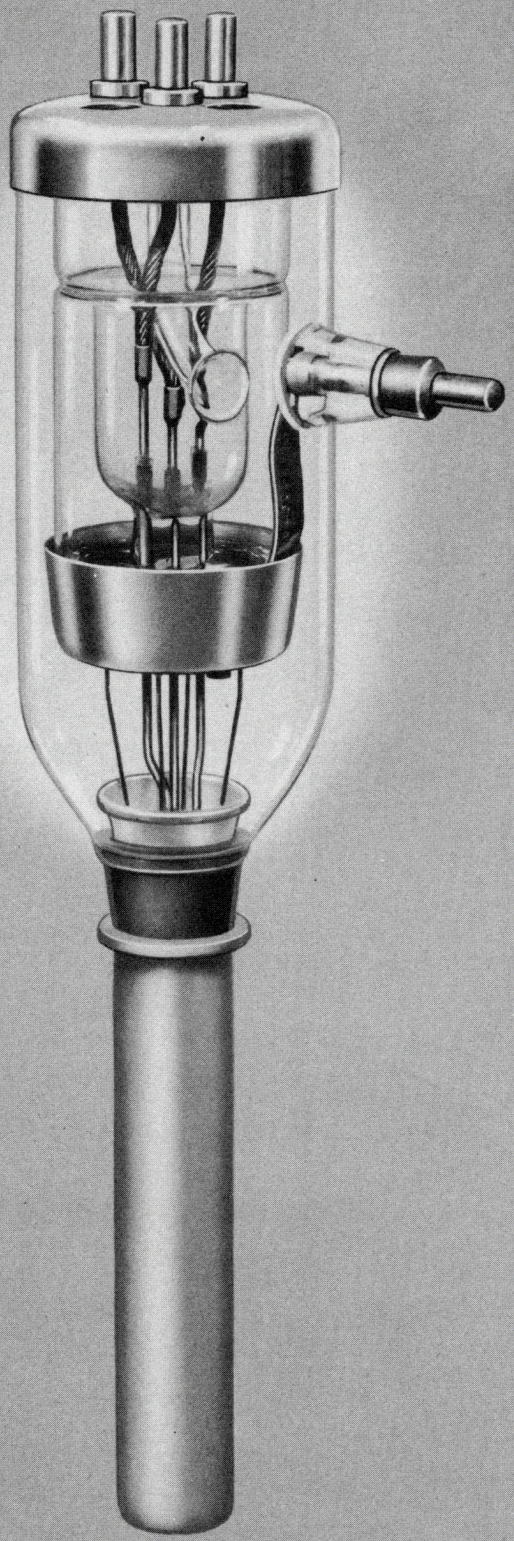

GENERAL DATA

DESCRIPTION:

Federal's F-891 is a three-electrode tube designed for use as a modulator, amplifier, and oscillator. The anode is water-cooled, capable of dissipating 6 kilowatts. The cathode is a pure tungsten filament. Maximum ratings apply up to 1.6 megacycles, with operation up to 20 megacycles permissible at reduced ratings.

Electrical:

Filament Voltage	22 Volts
Filament Current	60 Amperes
Filament Starting Current	120 Amperes max.
Filament Cold Resistance	0.031 Ohms
Peak Cathode Current	9 Amperes
Amplification Factor, I_b = 0.75 amps., E_c = —500 volts	8.5
Interelectrode Capacitances	
Grid-Plate	27 $\mu\mu$f
Grid-Filament	19 $\mu\mu$f
Plate-Filament	2 $\mu\mu$f

Mechanical:

Mounting Position— Vertical, anode down	
Type of Cooling—Water	
Minimum Water Flow on Anode	3 GPM
Maximum Outgoing Water Temperature	70° C
Maximum Glass Temperature	150° C
Net Weight, approximate	3½ Pounds

Copyright 1949, Federal Telephone and Radio Corporation

FEDERAL POWER TRIODE
Type F-891
6 Kilowatts Plate Dissipation

Maximum Ratings vs. Operating Frequency			
Frequency	1.6	7.5	20.0 Megacycles
Percentage of Maximum Rated Plate Voltage and Plate Input Class C—Telegraphy	100	75	50 Per Cent

Maximum Ratings and Typical Operating Conditions

AUDIO-FREQUENCY POWER AMPLIFIER AND MODULATOR—CLASS B

Maximum Ratings, Absolute Values

DC Plate Voltage	15,000 Volts
Maximum Signal DC Plate Current†	2.0 Amperes
Maximum Signal Plate Input†	20 Kilowatts
Plate Dissipation†	5 Kilowatts

Typical Operation

(Unless otherwise specified, values are for two tubes)

DC Plate Voltage	6,000	10,000	12,500 Volts
DC Grid Voltage	—630	—1,100	—1,450 Volts
Peak A-F Grid to Grid Voltage	2,060	3,060	3,760 Volts
Zero Signal DC Plate Current	0.5	0.5	0.4 Amperes
Max. Signal DC Plate Current	2.5	2.4	2.5 Amperes
Effective Load Resistance (plate to plate)	5,000	10,000	12,000 Ohms
Max. Signal Driving Power, approx.	110	225	245 Watts
Max. Signal Power Output, approx.	8	16	22 Kilowatts

†Averaged over any audio-frequency cycle of sine-wave form.

RADIO-FREQUENCY POWER AMPLIFIER AND OSCILLATOR—CLASS C TELEGRAPHY

(Key-down conditions per tube without amplitude Modulation)¶

Maximum Ratings, Absolute Values

DC Plate Voltage	12,000 Volts
DC Grid Voltage	—3,000 Volts
DC Plate Current	2.0 Amperes
DC Grid Current	0.15 Amperes
Plate Input	18 Kilowatts
Plate Dissipation	6 Kilowatts

Typical Operation

DC Plate Voltage	8,000	10,000 Volts
DC Grid Voltage	—1800	—2,000 Volts
Peak R-F Grid Voltage	2400	2,700 Volts
DC Plate Current	1.15	1.33 Amperes
DC Grid Current, approx.	0.09	0.14 Amperes
Driving Power, approx.	215	375 Watts
Power Output, approx.	6.5	10 Kilowatts

¶Modulation essentially negative may be used, if the positive peak of the envelope does not exceed 115 per cent of carrier conditions.

DC EXCITATION

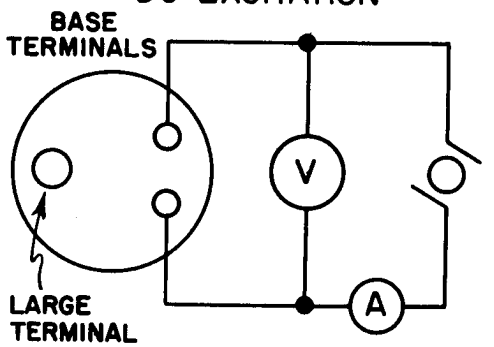

V = 22 VOLTS A = 60 AMPERES

SINGLE PHASE AC EXCITATION

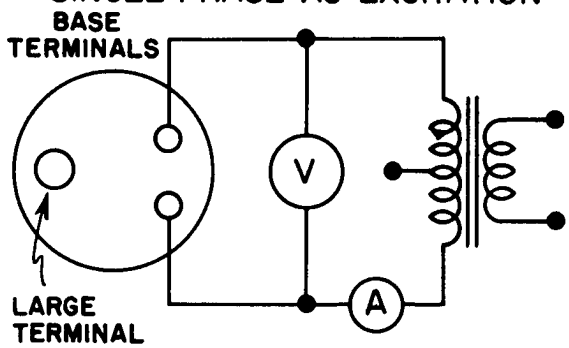

V = 22 VOLTS A = 60 AMPERES

TWO PHASE AC EXCITATION

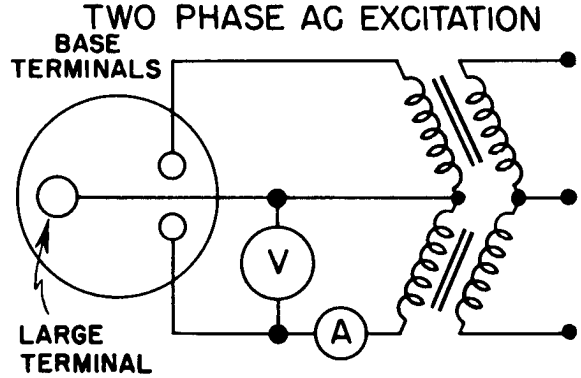

V = 11 VOLTS A = 60 AMPERES

FEDERAL F—891
FILAMENT CONNECTIONS

Federal's tube experience goes back to the pioneer days . . . one of the oldest manufacturers in the industry.

FEDERAL POWER TRIODE
Type F-891
6 Kilowatts Plate Dissipation

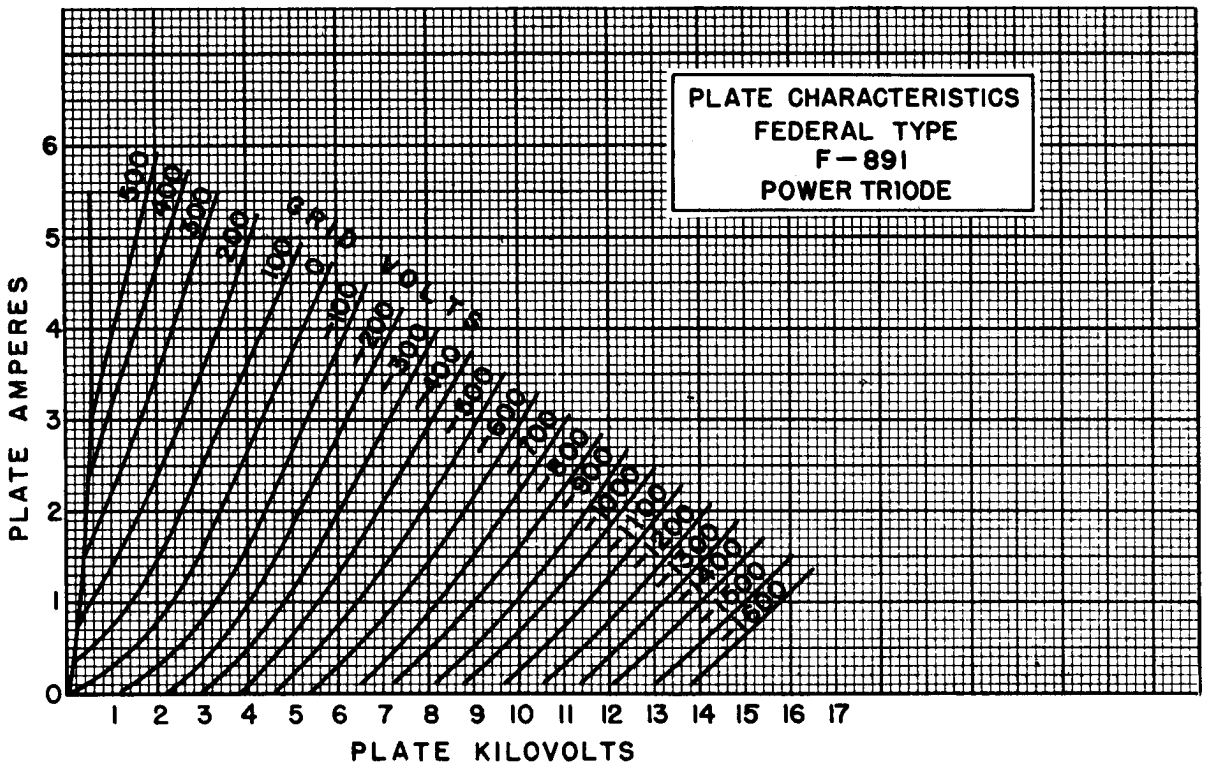

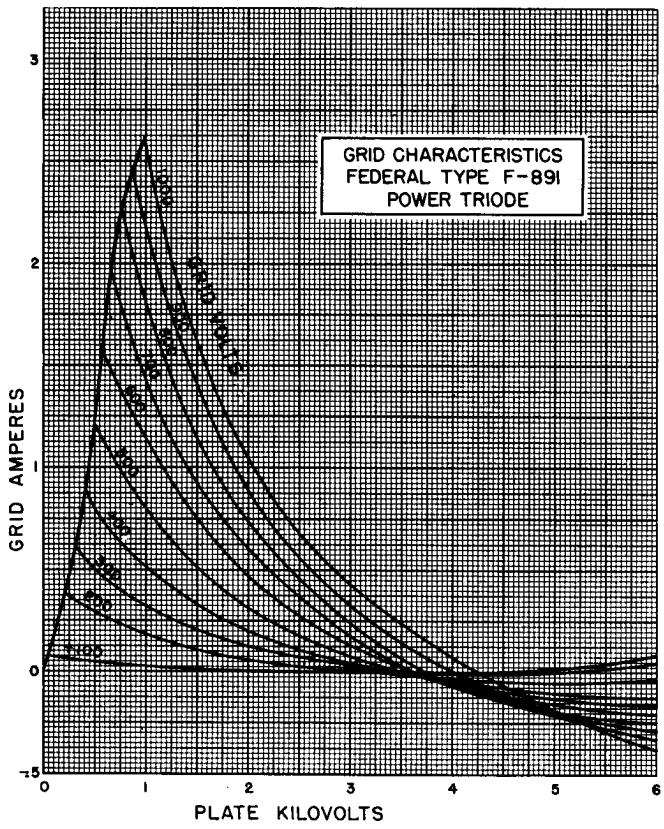

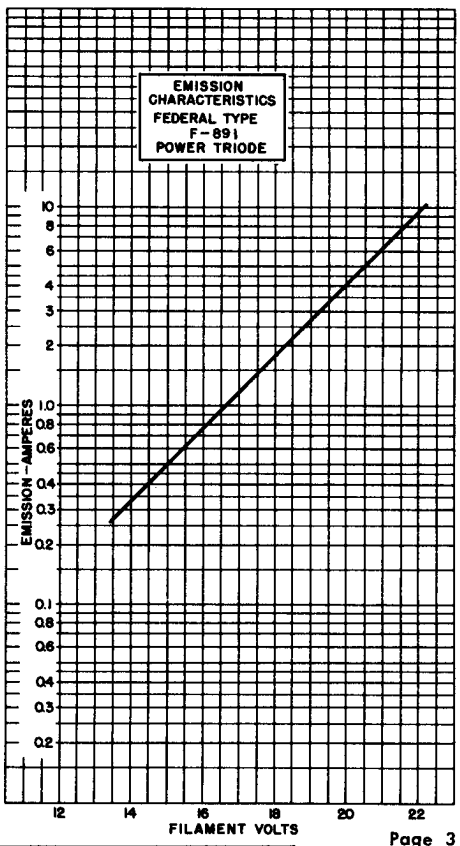

FEDERAL POWER TRIODE
Type F-891
6 Kilowatts Plate Dissipation

Federal tubes are in service around the world: Transmitting tubes, Industrial tubes, Rectifying tubes, Special Purpose tubes.

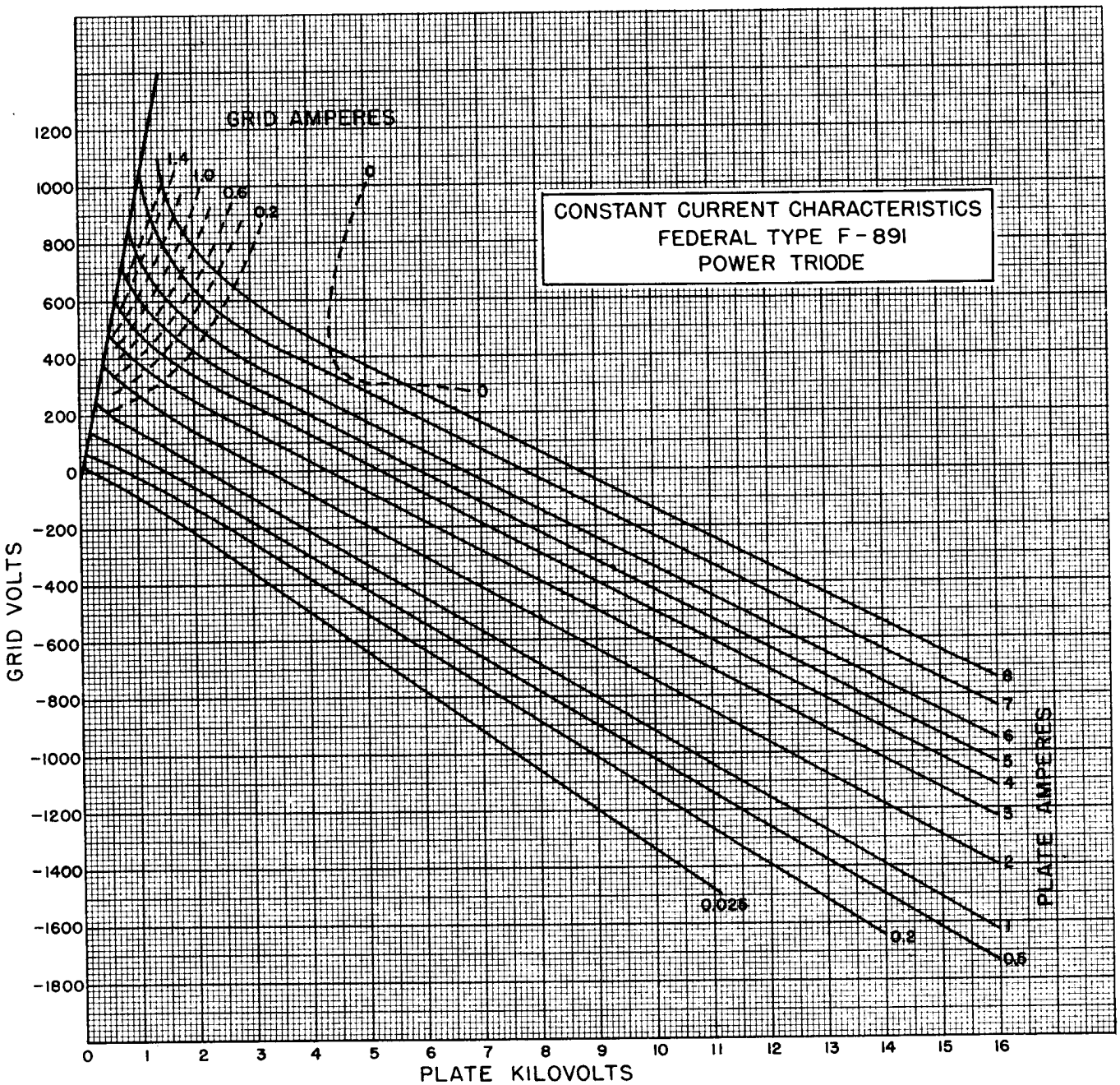

Long recognized as a maker of better tubes, Federal now leads with new production methods giving longer tube life.

FEDERAL POWER TRIODE
Type F-891
6 Kilowatts Plate Dissipation

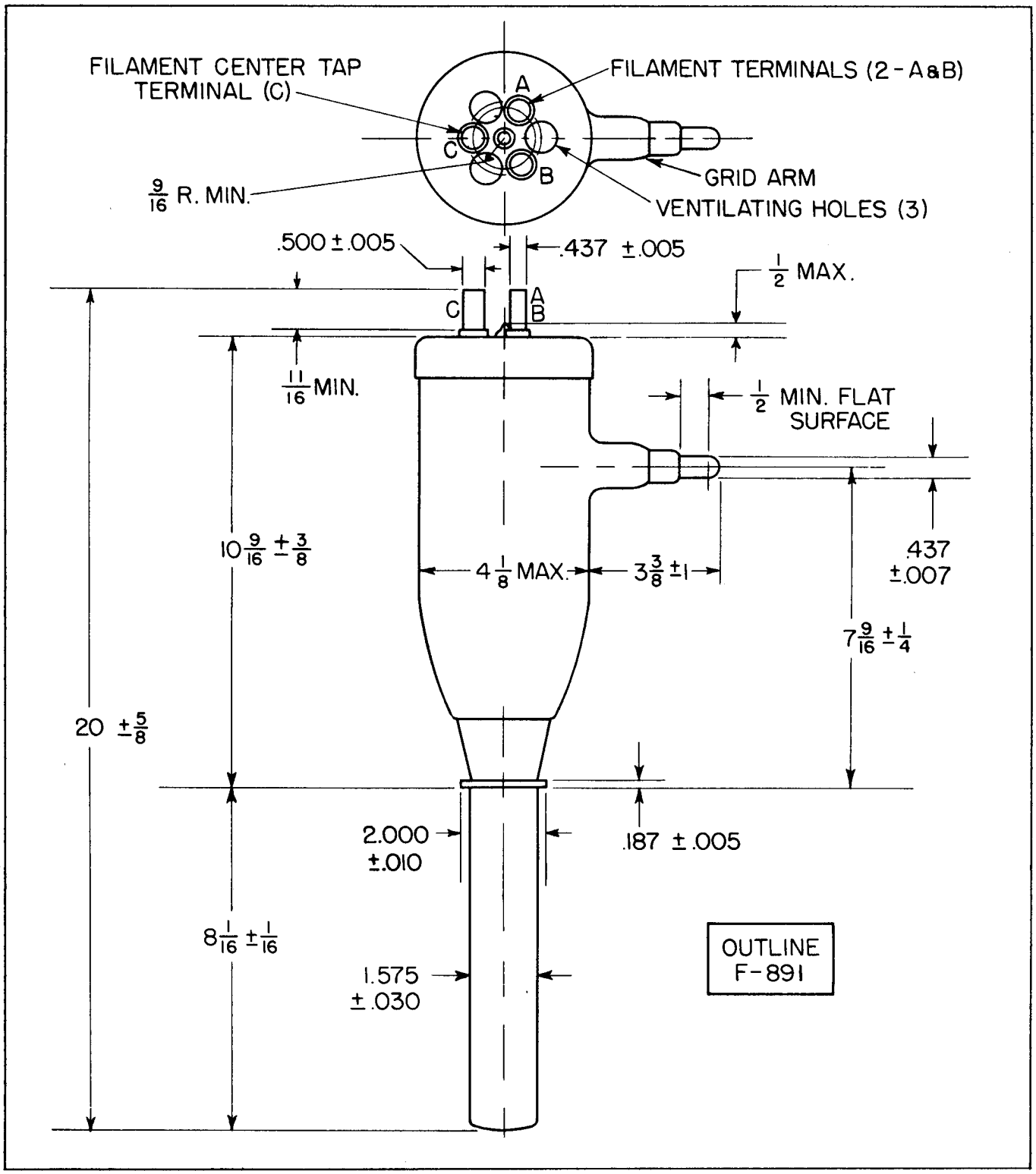

Federal Telephone and Radio Corporation
100 Kingsland Road Clifton, New Jersey

An IT&T Associate

Federal Always Has
Made Better Tubes

Form FJ-111. Printed in U. S. A.

FEDERAL POWER TRIODE
Type F-891-R
4 Kilowatts Plate Dissipation

GENERAL DATA

DESCRIPTION:

Federal's F-891-R is a three-electrode tube engineered for use as a radio-frequency power amplifier, oscillator, and Class B modulator. The anode is forced-air-cooled, capable of dissipating 4 kilowatts. The cathode, a pure tungsten filament, is designed and built to permit operation from single-phase or two-phase alternating current, and from direct current. Maximum ratings apply up to 1.6 megacycles. Operation is permissible up to 20 megacycles at reduced ratings.

Electrical:

Filament Voltage	22 Volts
Filament Current	60 Amperes
Filament Starting Current	120 Amperes Max.
Filament Cold Resistance	.031 Ohms
Peak Cathode Current	9 Amperes
Amplification Factor, $E_c = -50$ V; $I_b = 0.45$ A	8.5
Interelectrode Capacitances	
Grid-Plate	28 $\mu\mu$f
Grid-Filament	19 $\mu\mu$f
Plate-Filament	2.5 $\mu\mu$f

Mechanical:

Mounting Position—Vertical, Anode Down			
Type of Cooling—Forced Air			
Maximum Incoming Air Temperature			45° C
Required Air Flow on Anode			
Plate Dissipation (Kilowatts)	4	3.2	2.4
Air Flow—Cubic Feet per Min.	450	380	300
Pressure—Inches Water	0.5	0.36	0.2
Maximum Glass Temperature			150° C
Max. Radiator Temperature (Measured in Well)			180° C
Net Weight, Approximate			46 Pounds

The name "Federal" always has been synonymous with *leadership* in tube development and construction.

Copyright 1949, Federal Telephone and Radio Corporation

FEDERAL POWER TRIODE
Type F-891-R
4 Kilowatts Plate Dissipation

Maximum Ratings vs. Operating Frequency

Frequency	1.6	7.5	20 Megacycles
Percentage of Maximum Rated Plate Voltage and Plate Input			
Class C—Telegraphy	100	75	50 Per Cent

Maximum Ratings and Typical Operating Conditions

AUDIO-FREQUENCY POWER AMPLIFIER AND MODULATOR—CLASS B

Maximum Ratings, Absolute Values

DC Plate Voltage	10,000 Volts
Maximum Signal DC Plate Current†	2 Amperes
Maximum Signal Plate Input†	10.5 Kilowatts
Plate Dissipation†	3.5 Kilowatts

Typical Operation

(Unless otherwise specified, values are for two tubes)

DC Plate Voltage	6,000	8,000 Volts
DC Grid Voltage	—630	—860 Volts
Peak A-F Grid-to-Grid Voltage	2,060	2,260 Volts
Zero Signal DC Plate Current	0.5	0.5 Amperes
Maximum Signal DC Plate Current	2.5	2.1 Amperes
Effective Load Resistance, Plate to Plate	5,000	8,000 Ohms
Maximum Signal Driving Power, Approx.	110	50 Watts
Maximum Signal Power Output, Approx.	8	10 Kilowatts

†Averaged over any audio-frequency cycle of sine-wave form.

RADIO-FREQUENCY POWER AMPLIFIER AND OSCILLATOR—CLASS C TELEGRAPHY

(Key-down conditions per tube without amplitude Modulation)¶

Maximum Ratings, Absolute Values

DC Plate Voltage	10,000 Volts
DC Grid Voltage	—3,000 Volts
DC Plate Current	2 Amperes
DC Grid Current	0.15 Amperes
Plate Input	15 Kilowatts
Plate Dissipation	4 Kilowatts

Typical Operation

DC Plate Voltage	8,000	10,000 Volts
DC Grid Voltage	—1,800	—2,000 Volts
Peak R-F Grid Voltage	2,400	2,700 Volts
DC Plate Current	1.14	1.33 Amperes
DC Grid Current, approximate	0.09	0.14 Amperes
Driving Power, approximate	215	375 Watts
Power Output, approximate	6.5	10 Kilowatts

¶Modulation essentially negative may be used if the positive peak of the envelope does not exceed 115 per cent of carrier conditions.

DC EXCITATION

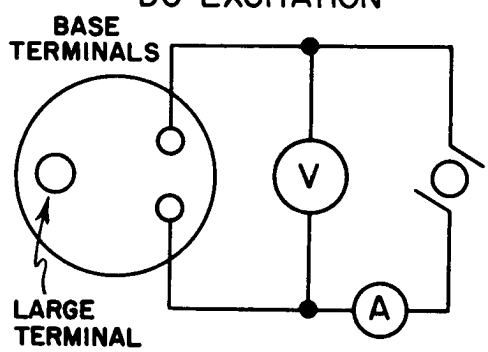

V = 22 VOLTS
A = 60 AMPERES

SINGLE PHASE AC EXCITATION

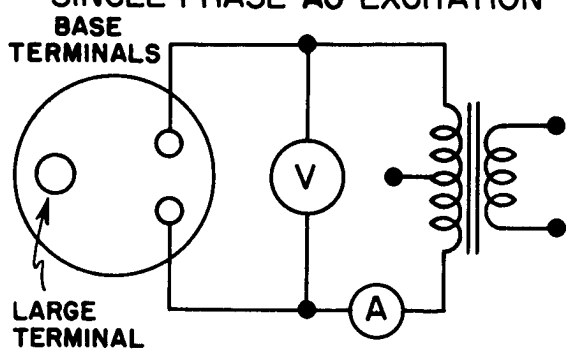

V = 22 VOLTS
A = 60 AMPERES

TWO PHASE AC EXCITATION

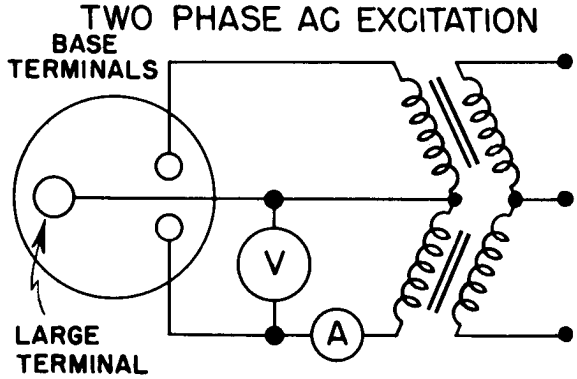

V = 11 VOLTS
A = 60 AMPERES

FEDERAL F—891-R
FILAMENT CONNECTIONS

As in other Federal types, the F-891-R is manufactured under the most rigid quality control, assuring continuous performance according to rating.

FEDERAL POWER TRIODE
Type F-891-R
4 Kilowatts Plate Dissipation

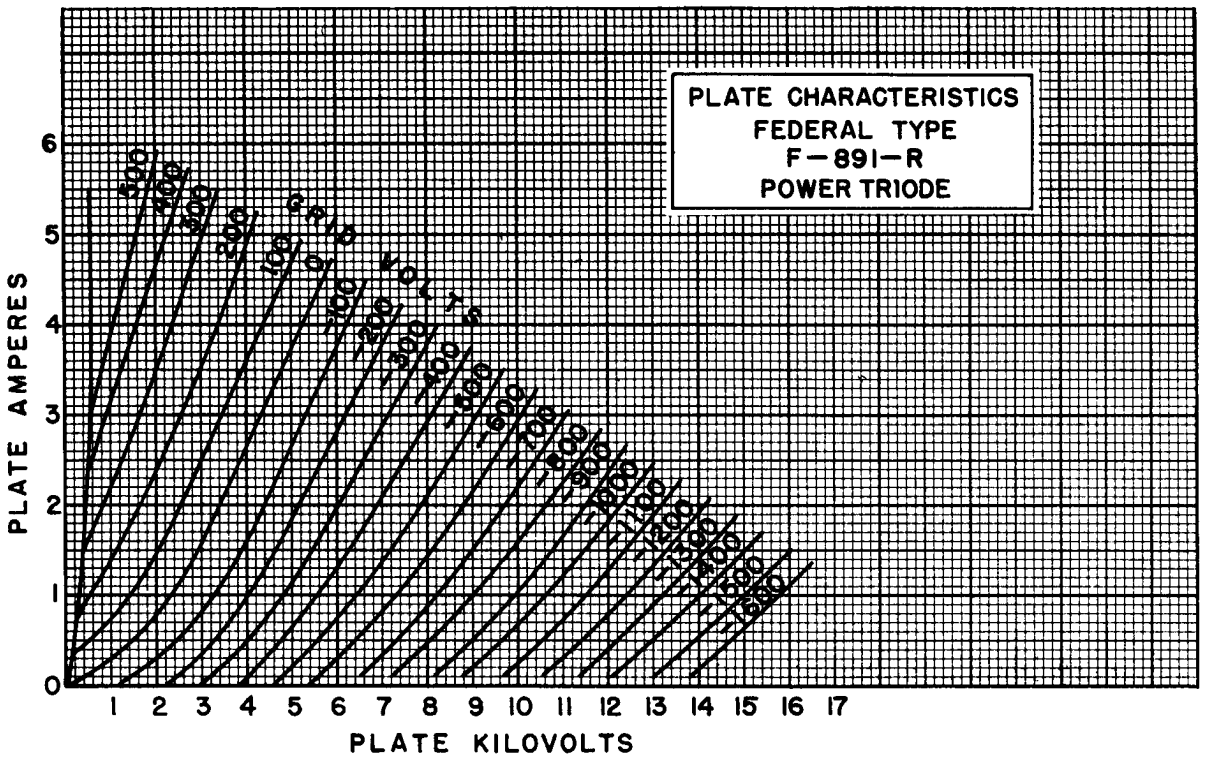

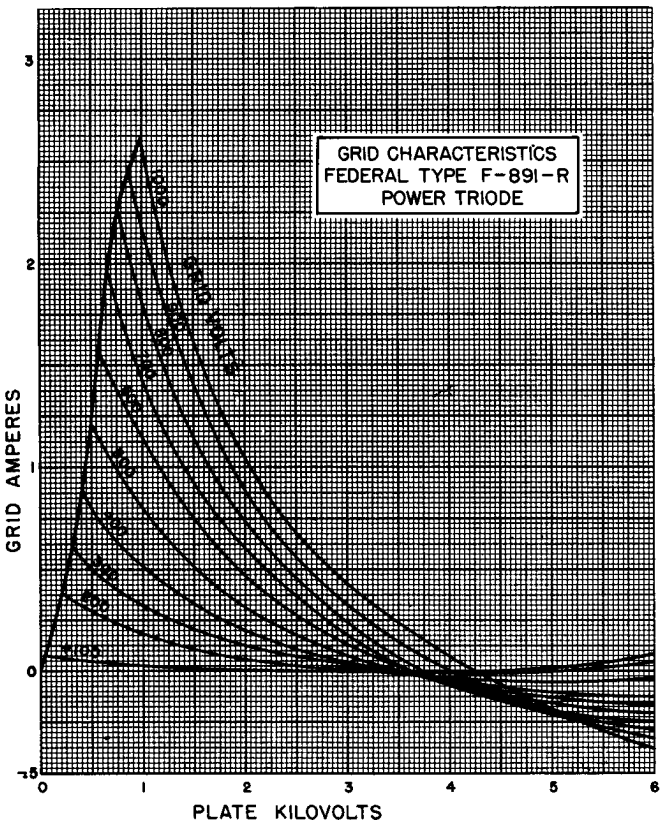

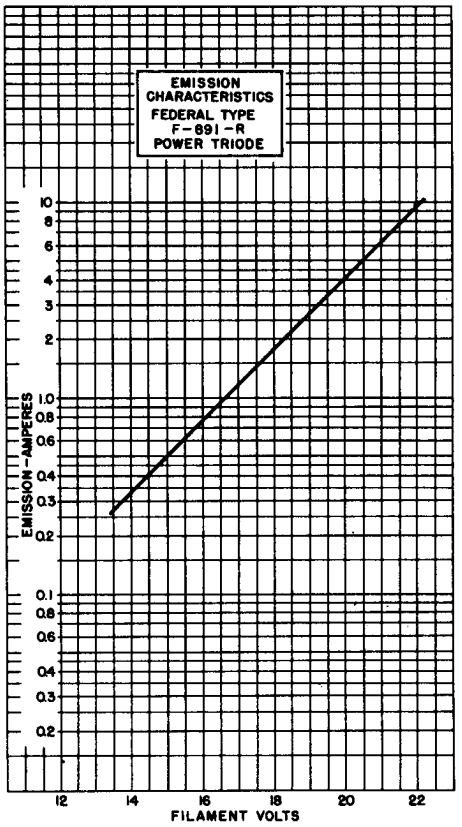

FEDERAL POWER TRIODE
Type F-891-R
4 Kilowatts Plate Dissipation

In nation-wide service as a modulator in low powered transmitters, Federal's F-891-R is proving its exceptional abilities *everywhere*, every day.

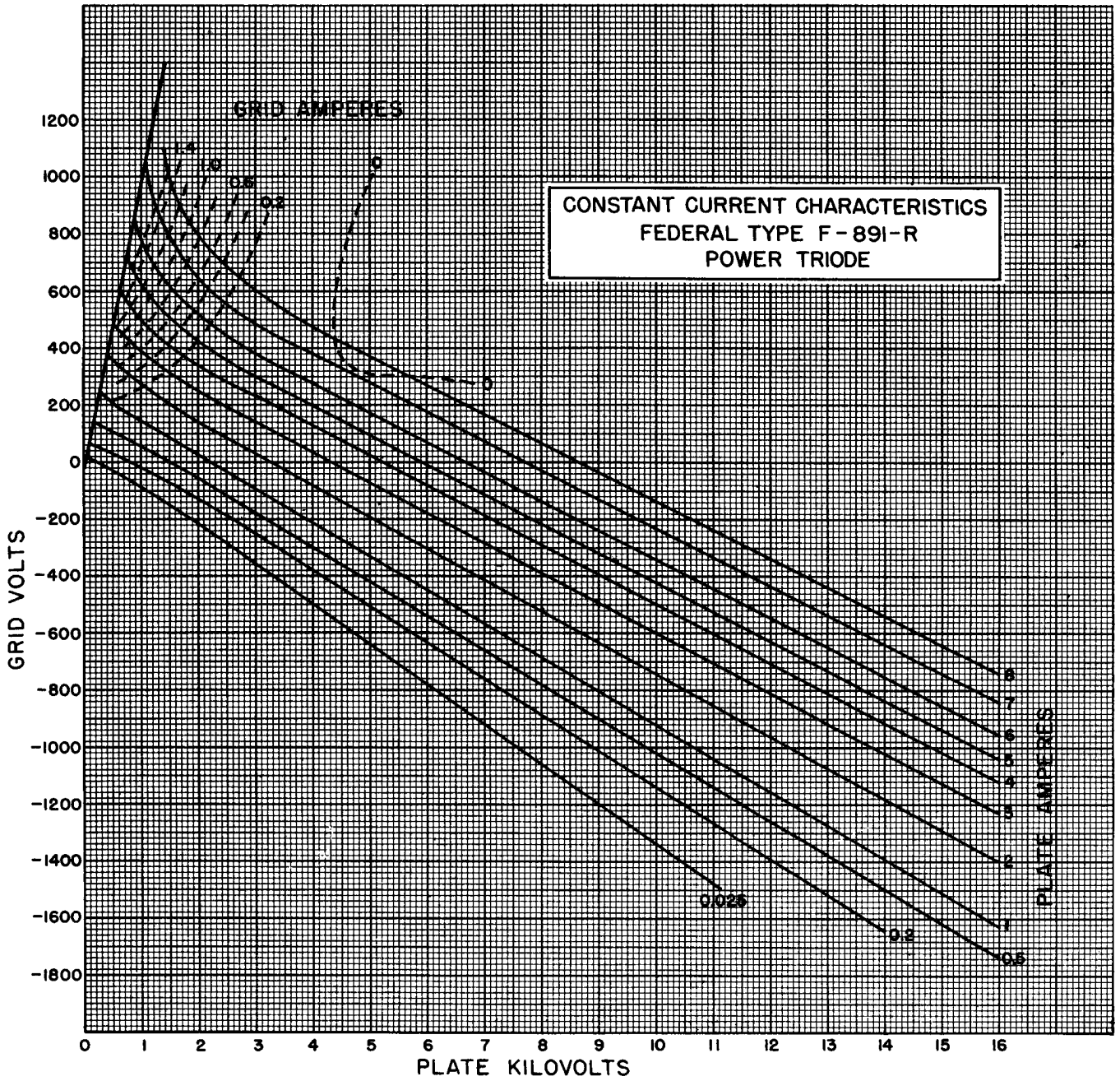

The all-round superiority of the F-891-R is due in part to the first-quality materials and components used *plus* first-rank engineering based on international experience.

FEDERAL POWER TRIODE
Type F-891-R
4 Kilowatts Plate Dissipation

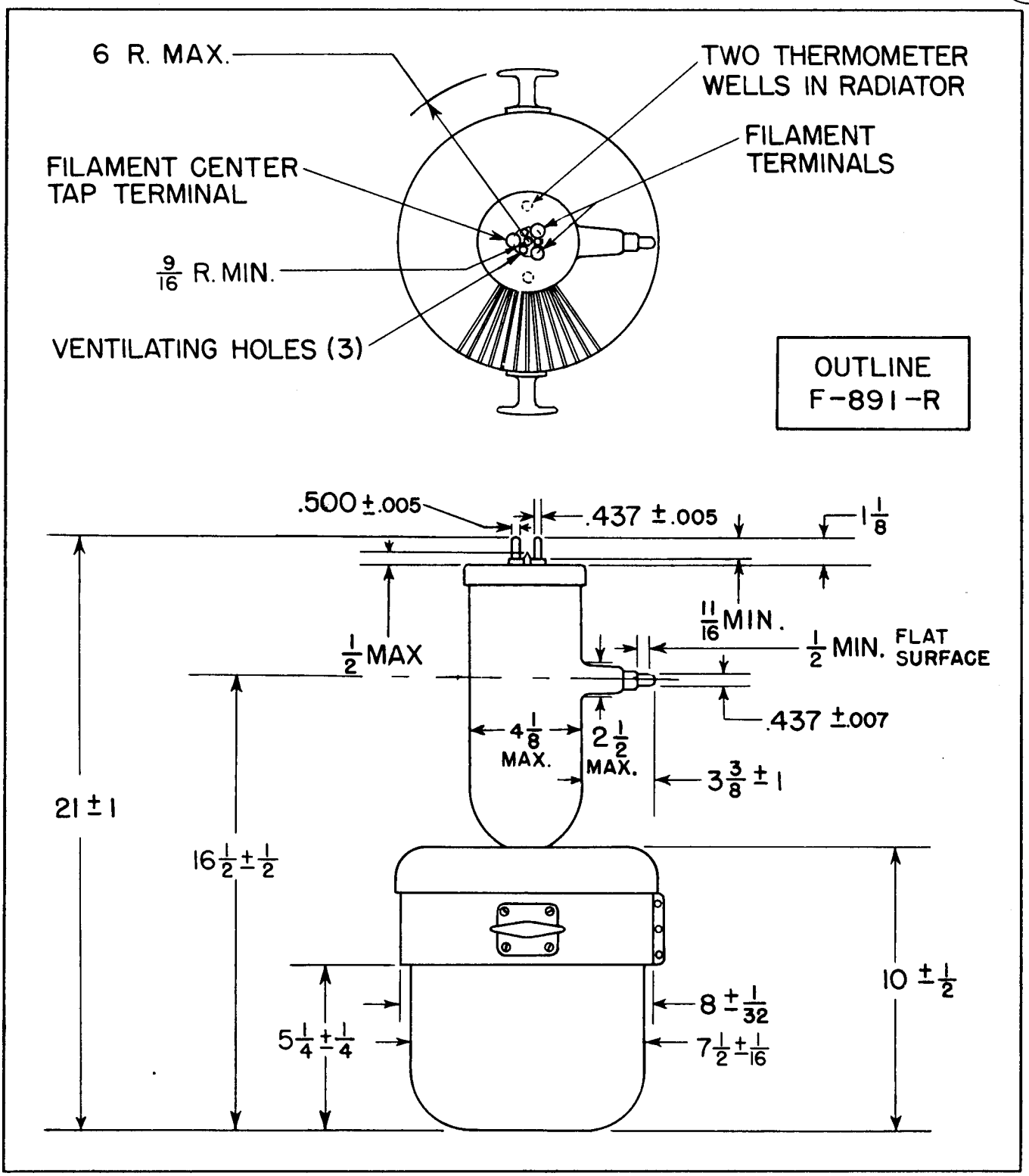

Federal Telephone and Radio Corporation
100 Kingsland Road Clifton, New Jersey

Federal Always Has
Made Better Tubes

Form FJ-166. Printed in U. S. A.

FEDERAL POWER TRIODE
Type F-895
40 Kilowatts Plate Dissipation

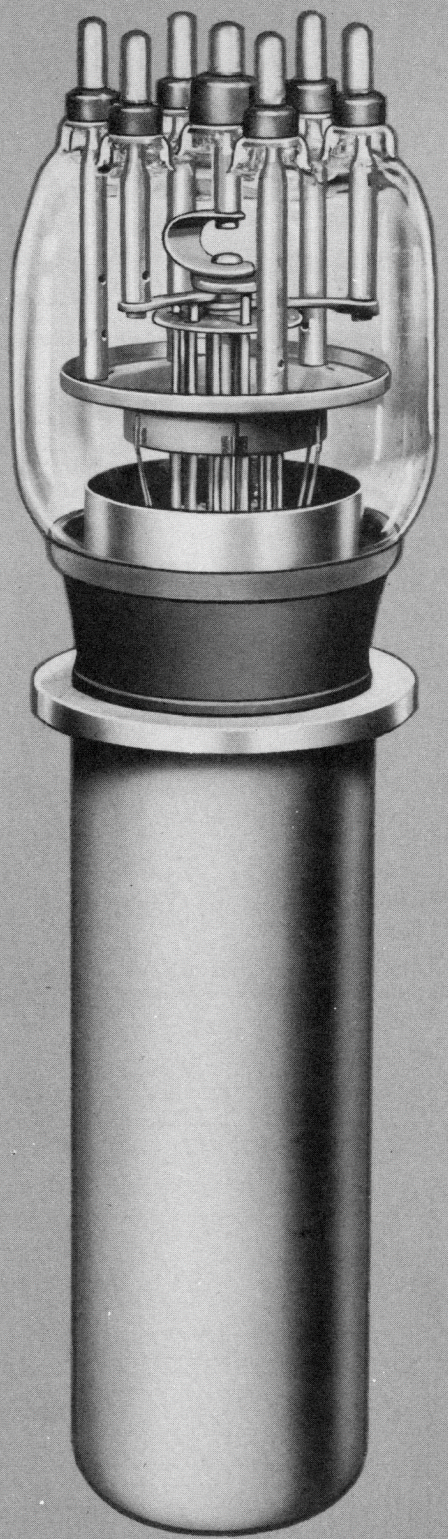

GENERAL DATA

DESCRIPTION:

The F-895 is a three electrode tube, designed for use as a radio-frequency amplifier, oscillator, or Class B modulator. The anode, water-cooled, is capable of dissipating 40 kilowatts. The cathode is a pure tungsten filament, operated on three-phase, alternating current excitation. Maximum rating apply up to 6 megacycles, and operation is permissable up to 25 megacycles at reduced ratings.

Electrical:

Filament Voltage, to Neutral	19 Volts
Filament Current, per Phase	138 Amperes
Filament Starting Current	210 Amperes max.
Filament Cold Resistance	.013 Ohms
Peak Cathode Current	62 Amperes
Amplification Factor, at $E_c = -200V$ $I_b = 1.6A$	37
Interelectrode Capacitances	
Grid-Plate	40 $\mu\mu$f
Grid-Filament	80 $\mu\mu$f
Plate-Filament	8 $\mu\mu$f

Mechanical:

Mounting Position—Vertical, anode down	
Type of Cooling—Water and Forced Air	
Minimum Water Flow on Anode	25 GPM.
Maximum Outgoing Water Temperature	70° C
Maximum Glass Temperature	150° C
Air Flow on Grid and Filament Terminals	5 CFM.
Net Weight, approximate	25 Pounds

Copyright 1952, Federal Telephone and Radio Corporation

FEDERAL POWER TRIODE
Type F-895
40 Kilowatts Plate Dissipation

Maximum Ratings vs. Operating Frequency

Frequency	6	12	25 Megacycles
Percentage of Maximum Rated Plate Voltage and Plate Input			
Class C—Plate Modulated	100	90	81 Per Cent
Class C—Unmodulated	100	85	70 Per Cent

Maximum Ratings and Typical Operating Conditions

AUDIO-FREQUENCY POWER AMPLIFIER AND MODULATOR—CLASS B

Maximum Ratings, Absolute Values

DC Plate Voltage	17,000 Volts
Maximum Signal DC Plate Current†	9 Amperes
Maximum Signal Plate Input†	100 Kilowatts
Plate Dissipation†	40 Kilowatts

Typical Operation

(Unless otherwise specified, values are for two tubes)

DC Plate Voltage	10,000	10,000	Volts
DC Grid Voltage	—200	—200	Volts
Peak A-F Grid-to-Grid Voltage	800	1200	Volts
Zero Signal DC Plate Current	2.0	2.0	Amperes
Maximum Signal DC Plate Current	5.1	11.5	Amperes
Effective Load Resistance, Plate to Plate	3600	2100	Ohms
Maximum Signal Driving Power, approximate	75	600	Watts
Maximum Signal Power Output, approximate	30	70	Kilowatts

†Averaged over any audio frequency cycle of sine-wave form.

PLATE-MODULATED RADIO-FREQUENCY POWER AMPLIFIER—CLASS C TELEPHONY

(Carrier conditions per tube for use with a maximum modulation factor of 1.0)

Maximum Ratings, Absolute Values

DC Plate Voltage	12,500 Volts
DC Grid Voltage	—3,000 Volts
DC Plate Current	9 Amperes
DC Grid Current	1.5 Amperes
Plate Input	70 Kilowatts
Plate Dissipation	40 Kilowatts

Typical Operation

DC Plate Voltage	10,000 Volts
DC Grid Voltage	—1,500 Volts
Peak R-F Grid Voltage	2,000 Volts
DC Plate Current	3.35 Amperes
DC Grid Current, approximate	0.75 Amperes
Driving Power, approximate	1.3 Kilowatts
Power Output, approximate	25 Kilowatts

RADIO-FREQUENCY POWER AMPLIFIER AND OSCILLATOR—CLASS C TELEGRAPHY

(Key-down conditions per tube without amplitude modulation)¶

Maximum Ratings, Absolute Values

DC Plate Voltage	17,000 Volts
DC Grid Voltage	—3,000 Volts
DC Plate Current	9 Amperes
DC Grid Current	1.5 Amperes
Plate Input	140 Kilowatts
Plate Dissipation	40 Kilowatts

Typical Operation

DC Plate Voltage	10,000	17,000	Volts
DC Grid Voltage	—1,000	—1,000	Volts
Peak R-F Grid Voltage	1,700	1,700	Volts
DC Plate Current	7.15	7.5	Amperes
DC Grid Current, approximate	1.2	1	Ampere
Driving Power, approximate	1.9	1.7	Kilowatts
Power Output, approximate	50	100	Kilowatts

¶Modulation essentially negative may be used if the positive peak of the envelope does not exceed 115 per cent of carrier conditions.

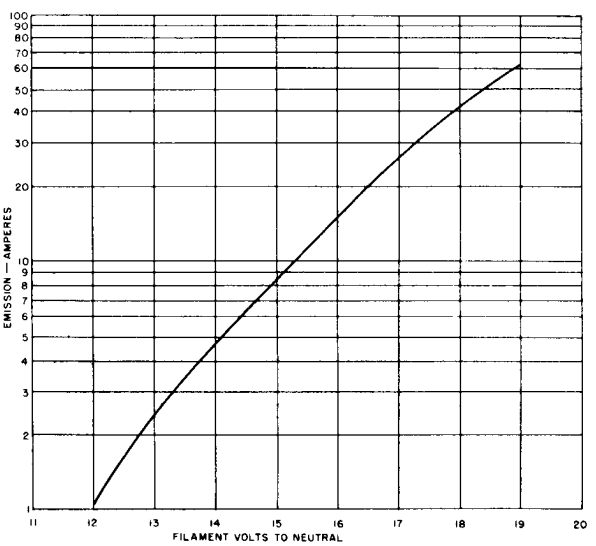

Filament Emission Characteristics
Federal Type F-895 Power Triode

An IT&T Associate

Federal's engineers are ready to consult with you on the application of Federal tubes to *your* design. No obligation for consultation.

FEDERAL POWER TRIODE
Type F-895
40 Kilowatts Plate Dissipation

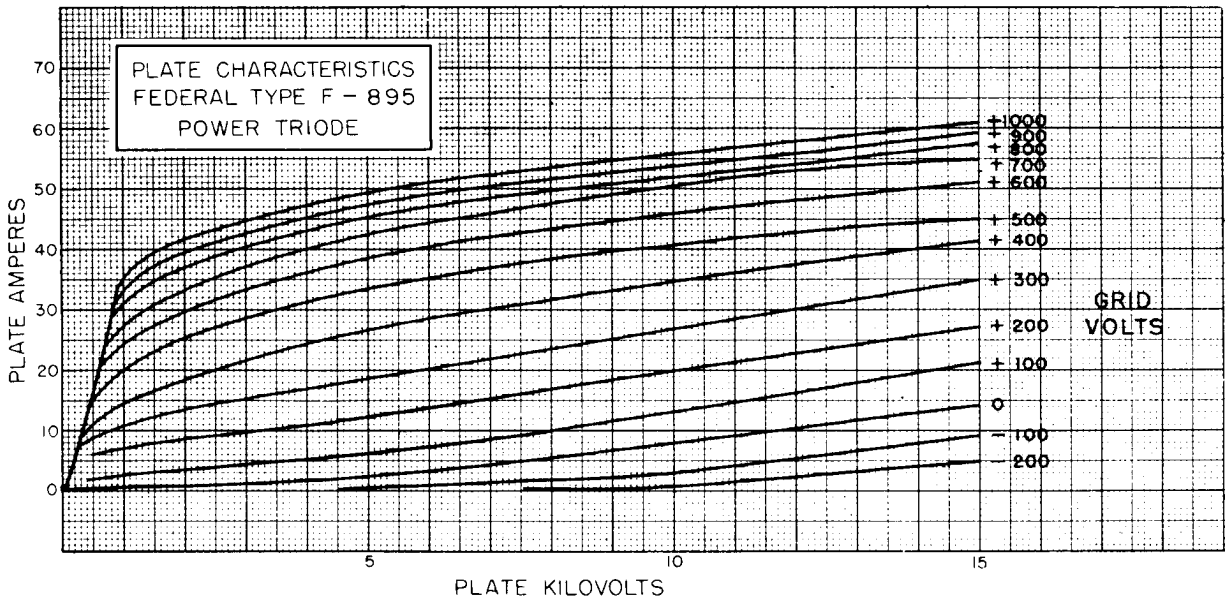

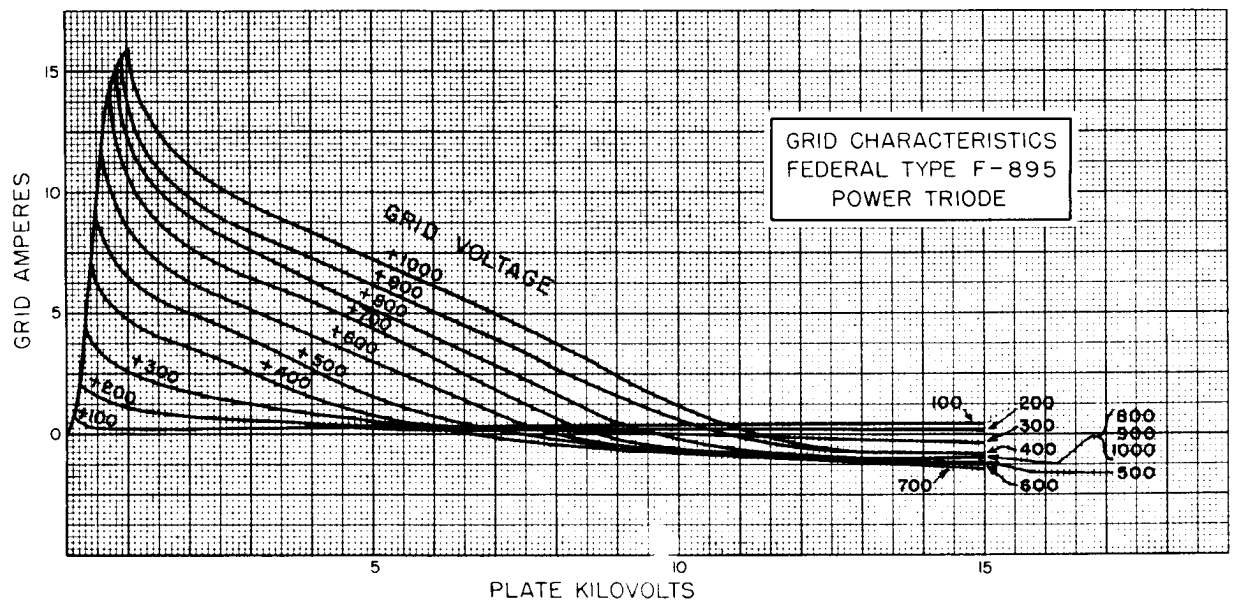

FEDERAL POWER TRIODE
Type F-895
40 Kilowatts Plate Dissipation

Federal has been distinguished for precision craftsmanship since the earliest days of tube manufacture. It's a tradition you can count on.

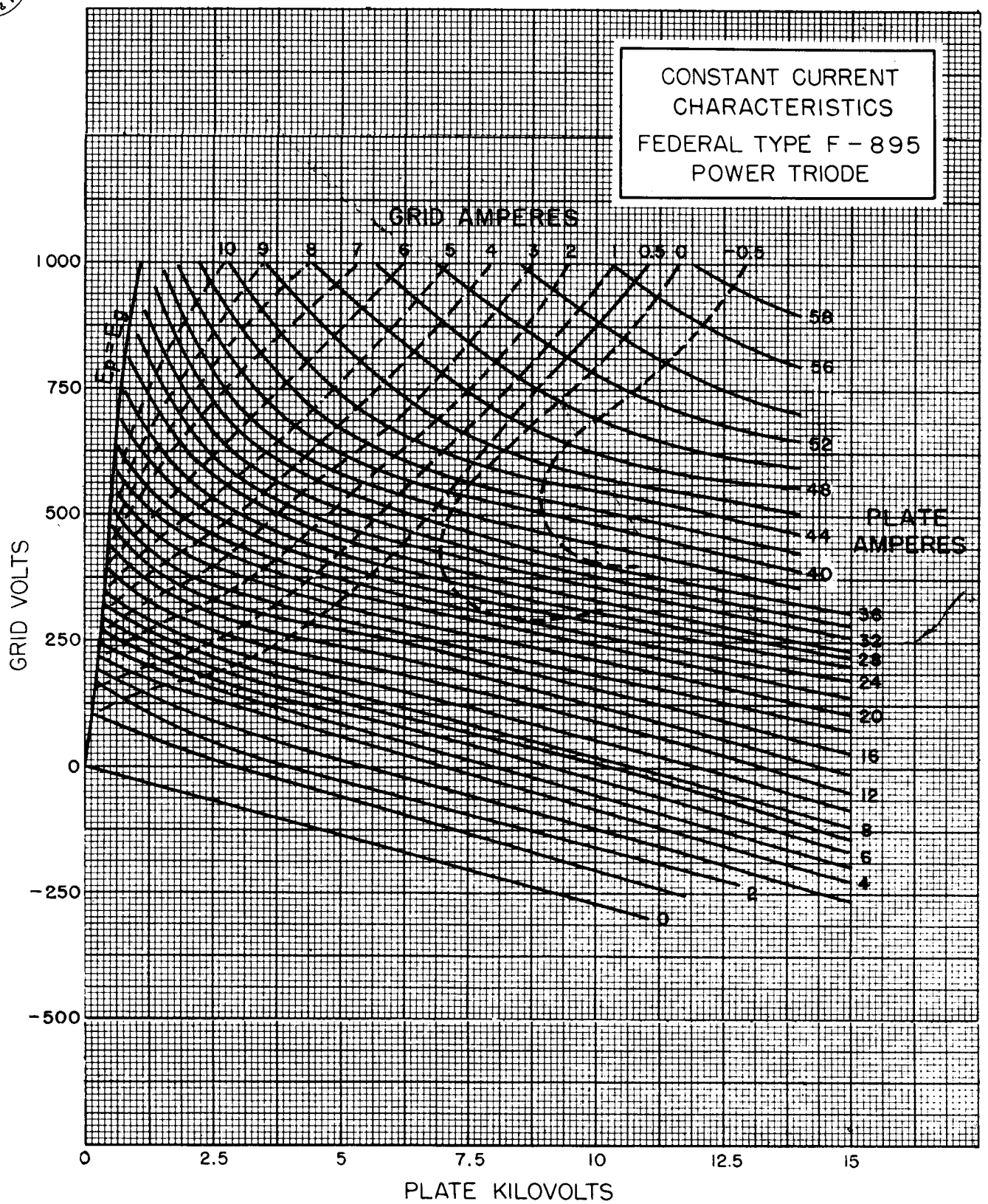

Federal's *Handbook of Tube Operation* offers a wealth of technical information on tubes—their characteristics, functions, applications. Write for your free copy.

FEDERAL POWER TRIODE
Type F-895
40 Kilowatts Plate Dissipation

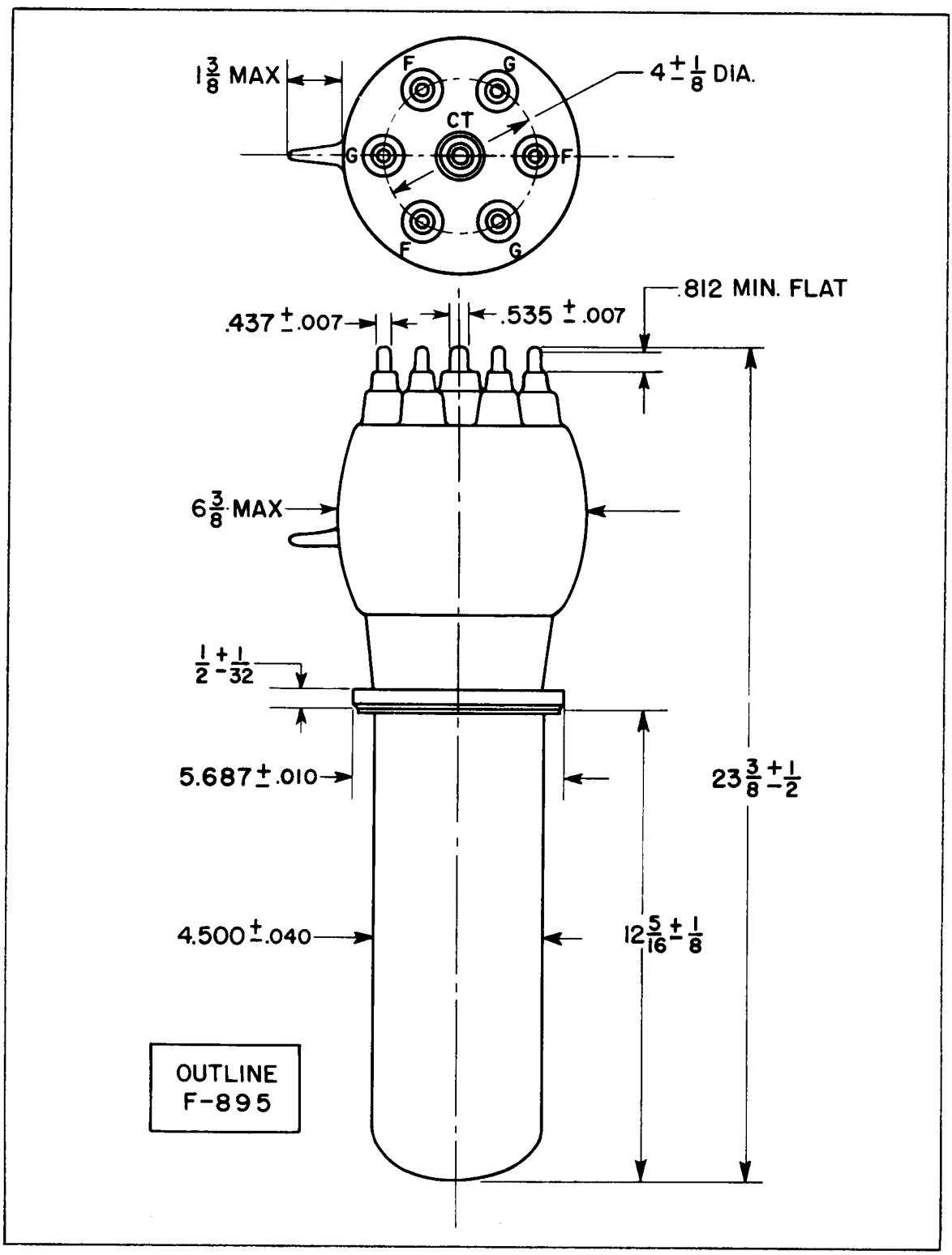

Federal Telephone and Radio Corporation
100 Kingsland Road Clifton, New Jersey

An IT&T Associate

When you are developing projects wherein tubes are components, consult Federal's engineers, let them advise and assist you . . . no obligation is incurred.

Over the years, hundreds of manufacturers, designers, technicians have taken advantage of this Federal service . . . with benefits both to their products and services.

Form F-511 Printed in U. S. A.

ELECTRON TUBE DIVISION
BOX 100 EASTON, PA. 18043
INTERNATIONAL TELEPHONE AND TELEGRAPH CORPORATION

F-1087
HYDROGEN
THYRATRON

TENTATIVE

DESCRIPTION

The F-1087 is the first in a family of new generation hydrogen thyratrons, operating at levels of 100,000 volts or more. The F-1087 is a multigap metal-ceramic hydrogen thyratron capable of switching over 15 megawatts peak power at greater than 25 kilowatts average power at a peak forward voltage of 100,000 volts. It is a zero bias unit consisting of six elements designed for operation in oil. The novel iterative gradient grid structure of the tube produces favorable anode take-over time and relatively low minimum anode take-over voltage characteristics. Other features of the tube include a planar type oxide coated cathode and a titanium hydride reservoir which combine to produce long life with exceptional range stability.

GENERAL CHARACTERISTICS

Electrical Data	Nom.	Min.	Max.	
Cathode Heater Voltage	6.3	5.8	6.8	Volts AC
Cathode Heater Current (at 6.3 volts)	6.0	5.5	6.5	Amperes AC
Reservoir Voltage	5.0	2.5	6.8	Volts AC
Reservoir Current (at 4.5V)		4.0	6.0	Amperes AC
Cathode and Reservoir Heaters (See Note 1)				
Minimum Heating Time		5		Minutes

Mechanical Data		
Mounting Position		Any
Base (Per Outline)		Flange
Cooling/Insulation Medium		See Note 2
Net Weight		1-1/4 Pounds
Dimensions (Per Outline)	Seated Height 6.25	Inches

MAXIMUM RATINGS

(See Note 3)

Max. Peak Anode Voltage, Forward	100.0	Kilovolts
Min. Anode Supply Voltage (Note 5)	5.0	Kilovolts DC
Max. Peak Anode Current	350	Amperes
Max. Average Anode Current	500	Milliamperes
Max. RMS Anode Current (Note 6)	7.0	Amperes AC
Max. epy x ib x prr	20×10^9	
Max. Anode Current Rate of Rise	2500	A/Microseconds
Peak Trigger Voltage		See Note 7
Max. Anode Delay Time (Note 8)	1.0	Microsecond
Max. Anode Delay Time Drift	0.10	Microsecond
Max. Time Jitter (Note 9)	0.005	Microsecond

WARNING: Operation of this tube may produce X-rays, which constitute a health hazard. Adequate rayproof shielding must therefore be provided in the equipment.

MAXIMUM RATINGS (Cont'd)

Note 1: See Outline Drawing, Figure 1.

Note 2: For operation above 25KV peak forward voltage the tube should be immersed in regular transformer insulating oil (Esso 35 or equivalent), Freon or sulfahexaflorine.

Provision should be made to cool the insulating medium so that the temperature is less than 50°C.

Note 3: Absolute values should not normally be allowed to occur simultaneously. For specific applications, consult the ITT Electron Tube Division, Applications Section.

Note 4: During the first 25 usec after conduction, the peak inverse voltage shall not exceed 20KV.

Note 5: A resistance divider of 40 megohms shall be connected between anode and cathode. The divider shall be tapped in four equal sections and connected to the tube per Figure 2. It is recommended that this arrangement be employed whether low voltage operation is required or not. This divider is a necessity for keyed grid operation.

Note 6: The root mean square anode current shall be computed as the square root of the product of peak current and the average current.

Note 7: The pulse produced by the driver circuit shall have the following characteristics when viewed at the F-1087 mounting plate with the tube grid disconnected:

A.	Amplitude	200-500 Volts
B.	Duration	2 usec (at 70% Points)
C.	Rate of Rise	0.35 usec (Max.)
D.	Impedance	50-500 ohms

The limits of anode delay time, delay time drift, and time jitter are based on the minimum trigger. Using the highest permissible trigger voltage and the lowest trigger source impedance materially reduces those values below the limits specified.

Note 8: The time of anode delay is measured between the 26 percent point on the rising portion of the unloaded grid voltage pulse and the point at which anode conduction begins.

Note 9: Time jitter is measured at the 50% point on the leading edge of the current pulse.

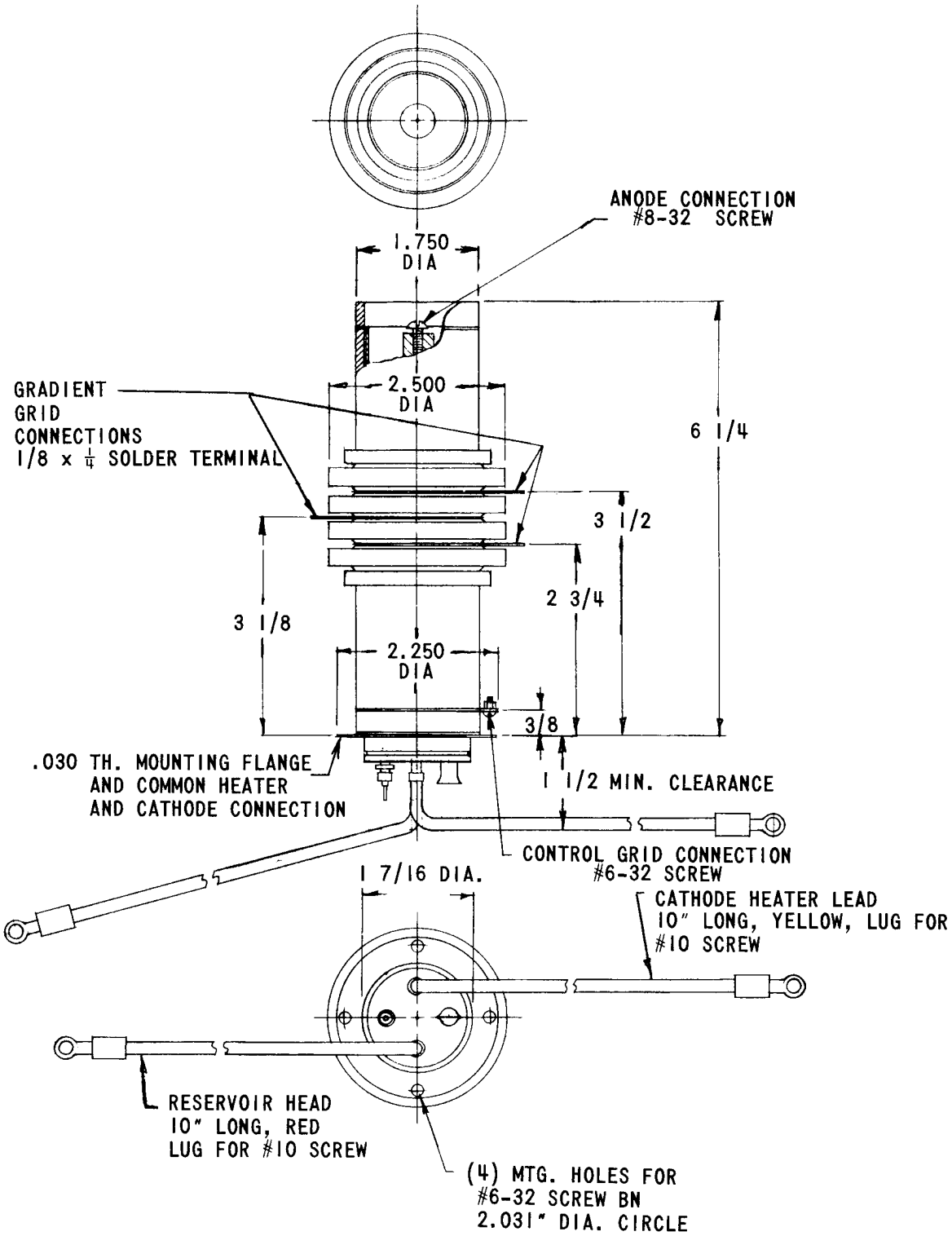

F-1087 OUTLINE
FIGURE 1

10/66

ELECTRON TUBE DIVISION
BOX 100 EASTON, PA. 18043
INTERNATIONAL TELEPHONE AND TELEGRAPH CORPORATION

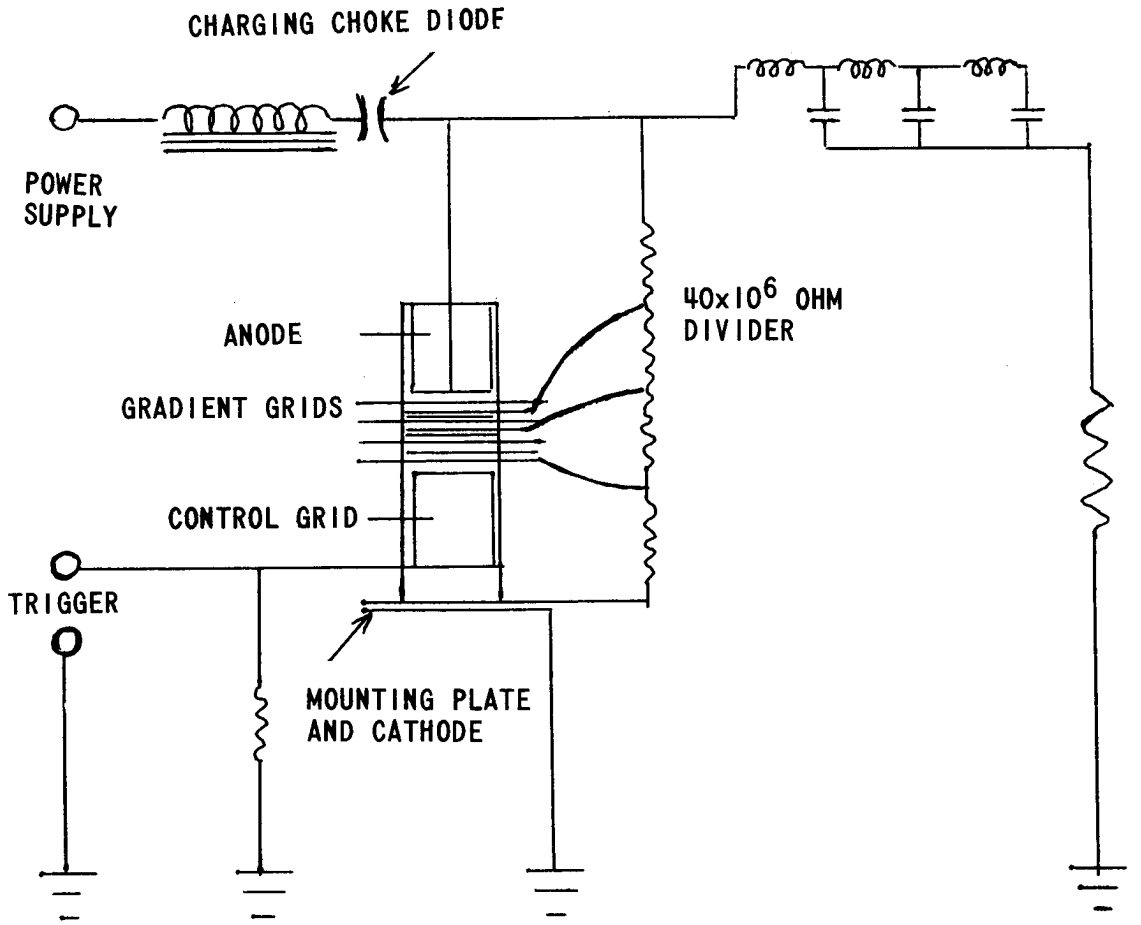

F-1087 OUTLINE
FIGURE 2

ITT

ITT COMPONENTS GROUP EUROPE

NEWS RELEASE

Release date : April 1st,1968

No. : 1063 E

ITT TESTS WORLD'S MOST POWERFUL TRIODE

Just prior to the opening of the 1968 Paris Components Salon, ITT Electron Tube Division announced the successful testing of the world's most powerful conventional triode. The monster tube, weighing more than 300 pounds and capable of dissipating 390 kilowatts, is under test-set evaluation as a hard-tube modulator.

The giant tube, shown beside ITT girl Connie Picone, requires 30 kW of filament power alone. Peak power output is 90 MW with 1000 microsecond long pulses at 1 percent duty.

End.

Caption to photograph 1063

(Please read last sentence of this Release).

YOUR LOCAL CONTACT IS :

Please see address list
on pocket Press pack.

ITT

ITT COMPONENTS GROUP EUROPE

NEWS RELEASE

Release date : 1er avril 1968

No. : 1063 F

ESSAIS SATISFAISANTS SUR LA NOUVELLE TRIODE ITT LA PLUS PUISSANTE AU MONDE.

Alors que va s'ouvrir le Salon des Composants 1968 à Paris, ITT Electron Tube Division fait savoir que les essais réalisés sur la triode conventionnelle la plus puissante au monde se sont avérés satisfaisants. Le tube géant, pesant plus de 150 kg et capable de dissiper 390 kilowatts, est actuellement soumis à des tests visant à démontrer sa robustesse exceptionnelle.

Le filament de ce tube géant ITT nécessite, à lui seul, une puissance de 30 kW. La puissance de sortie de pointe est de 90 MW pour des impulsions de 1000 microsecondes et un rendement de 1%.

Légende de la photo 1063

Voir dernière phrase du texte ci-dessus.

YOUR LOCAL CONTACT IS :

Voir liste d'adresses sur la pochette du dossier Presse.

ITT

ITT COMPONENTS GROUP EUROPE

NEWS RELEASE

Release date : Den 1. April 1968

No. : 1063 D

DER WELT GRÖSSTE LEISTUNGSTRIODE AUF DEM ITT PRÜFSTAND

Zur Eröffnung des Pariser Bauelemente Salons gibt die ITT Electron Tube Division den erfolgreichen Abschluss des Prüfprogrammes für die grösste Leistungstriode der Welt bekannt. Diese Riesenröhre mit einem Gewicht von über 135 kg und einer Verlustleistung von 390 kW wurde unter den Bedingungen von Hochvakuum - Modulatorröhren geprüft.

Diese Riesenröhre benötigt allein eine Heizleistung von 30 kW. Die Ausgangsspitzenleistung ist grösser als 90 MW, gemessen mit Impulsen von 1ms und einem Tastverhältnis von 1 : 100.

Bildunterschrift 1063

Siehe letzten Satz im obigen Text.

YOUR LOCAL CONTACT IS :

Die einzelnen Anschriften der Verkaufsbüros finden Sie auf der Klappe der Presse Informations Mappe.

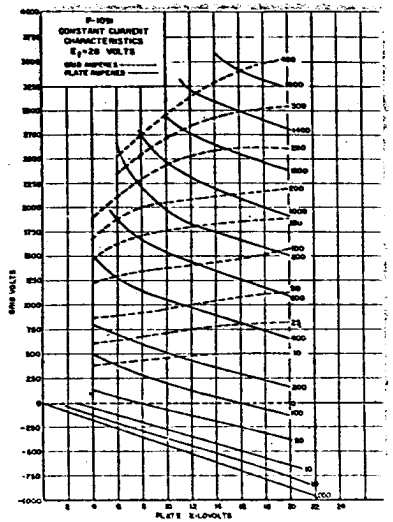

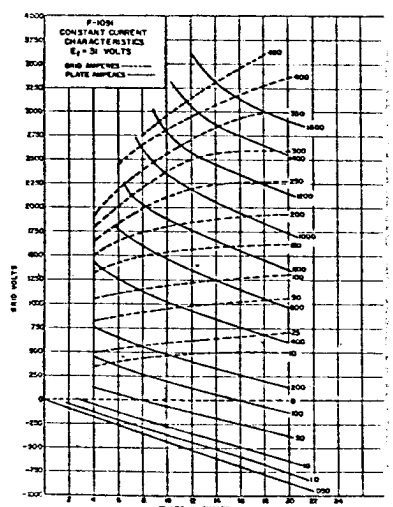

Measured POWER OUTPUT of 50 MEGAWATTS

ITT type F-1091 pictured here has recently undergone successful tests in the hard-tube modulator at the high power laboratory located at Rome Air Development Center. Fifty megawatts peak power output was obtained from the tube in each of the following two sets of operating conditions:

	Condition One	Condition Two
Plate Supply Voltage	65 KV	55 KV
Output Pulse Voltage	56 KV	38.8 KV
Tube Drop	9 KV	16.2 KV
Peak Plate Current	900 Amperes	1340 Amperes
Peak Positive Grid Voltage	1400 Volts	1800 Volts
Peak Grid Current	170 Amperes	200 Amperes
Load Resistance	62 Ohms	29 Ohms
Peak Power Output	50.4 Megawatts	52 Megawatts

The combined weight of the F-1091 and its water jacket is approximately 300 pounds. It is 43 inches long and sixteen inches in diameter at the ceramic to metal seals. The thoriated tungsten cathode is of mesh construction and operates at 31 volts and 975 amperes. The F-1091 was developed at the ITT plant in Easton, Pennsylvania.

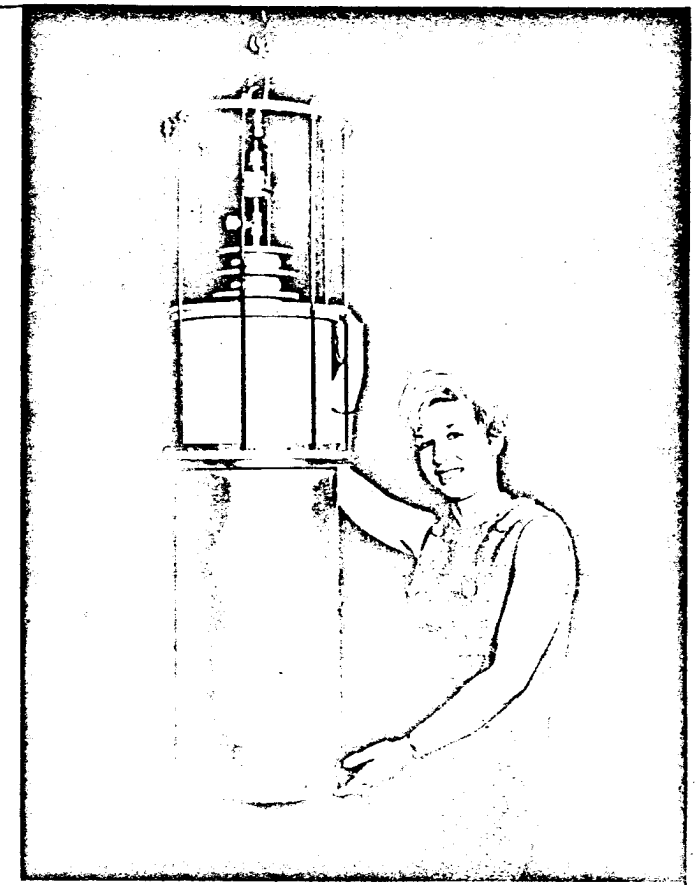

ELECTRON TUBE DIVISION
P. O. Box 100, Easton, Pa. 18042

ITT ELECTRON TUBE DIVISION
CLIFTON, NEW JERSEY
INTERNATIONAL TELEPHONE AND TELEGRAPH CORPORATION

F-2057 TRAVELING WAVE TUBE

TENTATIVE

GENERAL DESCRIPTION:

The F-2057 is a 1000 watt pulse traveling wave amplifier tube having 30db gain and designed primarily for use in the 2000 to 4000 mc frequency range. It is constructed in a rugged metal envelope with a helix type slow wave structure. The integral matching circuit is in 50 ohm coaxial line and is provided with UG 19 B/U Type connectors. The tube is focused by a periodic permanent magnet which is integral with the tube. A convergent beam gun and oxide impregnated cathode are used. Duty cycles up to .01 and pulse widths up to 100 microseconds can be used.

ELECTRICAL RATINGS, ABSOLUTE VALUES

Heater Voltage	6.3 (±10%)	volts	Maximum R-F Input Power	2	watts average
Heater Current	3.0	amperes	Maximum R-F Output Power	30	watts average
Maximum Anode Voltage (Note 1)	8000	volts	Maximum Duty Cycle	.01	
Maximum Shell Current	0.8	ampere peak	Maximum Pulse Width (beam)	100	microseconds
Maximum Collector Voltage	8000	volts	Maximum Cathode Current	2.0	ampere peak
Maximum Collector Dissipation	160	watts average			

ELECTRICAL INFORMATION

Maximum Frequency (Note 2)	4000	mc	Minimum Cold Transmission Loss	50	db
Minimum Frequency (Note 2)	2000	mc			

MECHANICAL INFORMATION

Type of Cathode	Oxide Impregnated Unipotential	Weight	10 pounds	maximum
Base	JETEC Designation B12-43	R-F Connections	UG-19 B/U	
Type of Envelope	Metal	Cooling Data	2 cfm of air	
Mounting Position	Any			

TYPICAL OPERATION AS POWER AMPLIFIER

Frequency	2000 to 4000	mc	Power Output (Minimum)	1000	watts peak
Anode Voltage (Note 1)	7300	volts	Gain	30	db
Cathode Current	1.4	amperes peak	Duty	.01	
Collector Voltage (tied to shell)	7300	volts	Pulse Width	5	microseconds
Collector Current	0.9	amperes peak			

NOTE 1: All voltages shown are with respect to cathode. The shell is normally operated at ground potential and the anode connection is made to the shell of the package.

NOTE 2: Useful gain and power output exists below 2000 mc and above 4000 mc and can be utilized by adjusting anode voltage to optimize the frequency range desired. However, bandwidth cannot be extended both upward and downward simultaneously and maximum gain and power output outside the normal bandwidth will be lower than rated values.

NOTE 3: Heater warmup of two minutes before applying high voltage is recommended.

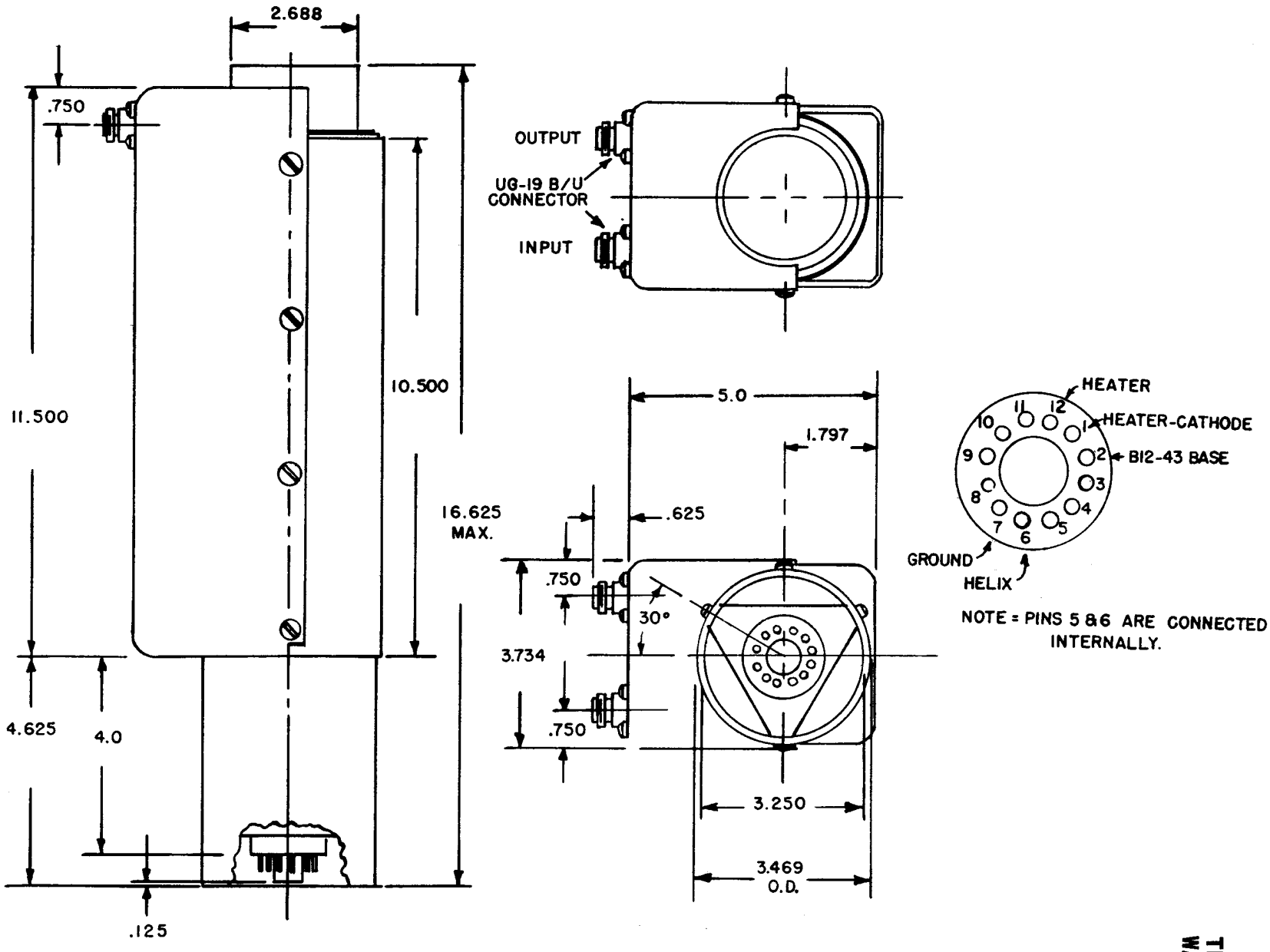

F-2057
TRAVELING
WAVE TUBE

ITT ELECTRON TUBE DIVISION
CLIFTON, NEW JERSEY
INTERNATIONAL TELEPHONE AND TELEGRAPH CORPORATION

F-2058 TRAVELING WAVE TUBE

TENTATIVE

GENERAL DESCRIPTION

The F-2058 is a 1000 watt pulse traveling wave amplifier tube having 30 db gain and designed primarily for use in the 2900 to 3100 mc frequency range. It is constructed in a rugged metal envelope with a helix type slow wave structure. The integral matching circuit is in 50 ohm coaxial line and is provided with type "TNC" connectors. The tube is focused by a periodic permanent magnet which is integral with the tube. A convergent beam gun and oxide impregnated cathode are used. Duty cycles up to .01 and pulse widths up to 100 microseconds can be used.

ELECTRICAL RATINGS, ABSOLUTE VALUES

Heater Voltage	6.3 (±10%)	volts	Maximum R-F Input Power	2	watts average
Heater Current	3.0	amperes	Maximum R-F Output Power	30	watts average
Maximum Anode Voltage (Note 1)	8000	volts	Maximum Duty Cycle	.01	
Maximum Shell Current	0.8	ampere peak	Maximum Pulse Width (beam)	100	microseconds
Maximum Collector Voltage	8000	volts	Maximum Cathode Current	2.0	ampere peak
Maximum Collector Dissipation	160	watts average			

ELECTRICAL INFORMATION

Maximum Frequency (Note 2)	3100	mc	Minimum Cold Transmission Loss	50	db
Minimum Frequency (Note 2)	2900	mc			

MECHANICAL INFORMATION

Type of Cathode	Oxide Impregnated Unipotential	Weight	10 Pounds	Maximum
Base	(See Outline)	R-F Connections	Type "TNC"	
Type of Envelope	Metal	Cooling Data	25 cfm of air	
Mounting Position	Any			

TYPICAL OPERATION AS POWER AMPLIFIER

Frequency	2900 to 3100	mc	Power Output (minimum)	1000	watts peak
Anode Voltage (Note 1)	7300	volts	Gain	30	db
Cathode Current	1.4	amperes peak	Duty	.01	
Collector Voltage (tied to shell)	7300	volts	Pulse Width	5	microseconds
Collector Current	0.9	amperes peak			

NOTE 1: All voltages shown are with respect to cathode. The shell is normally operated at ground potential and the anode connection is made to the shell of the package.

NOTE 2: Useful gain and power output exists below 2900 mc and above 3100 mc and can be utilized by adjusting anode voltage to optimize the frequency range desired. However, bandwidth cannot be extended both upward and downward simultaneously and maximum gain and power output outside the normal bandwidth will be lower than rated.

NOTE 3: Heater warm up of two minutes before applying high voltage is recommended.

F-2058
TRAVELING
WAVE TUBE

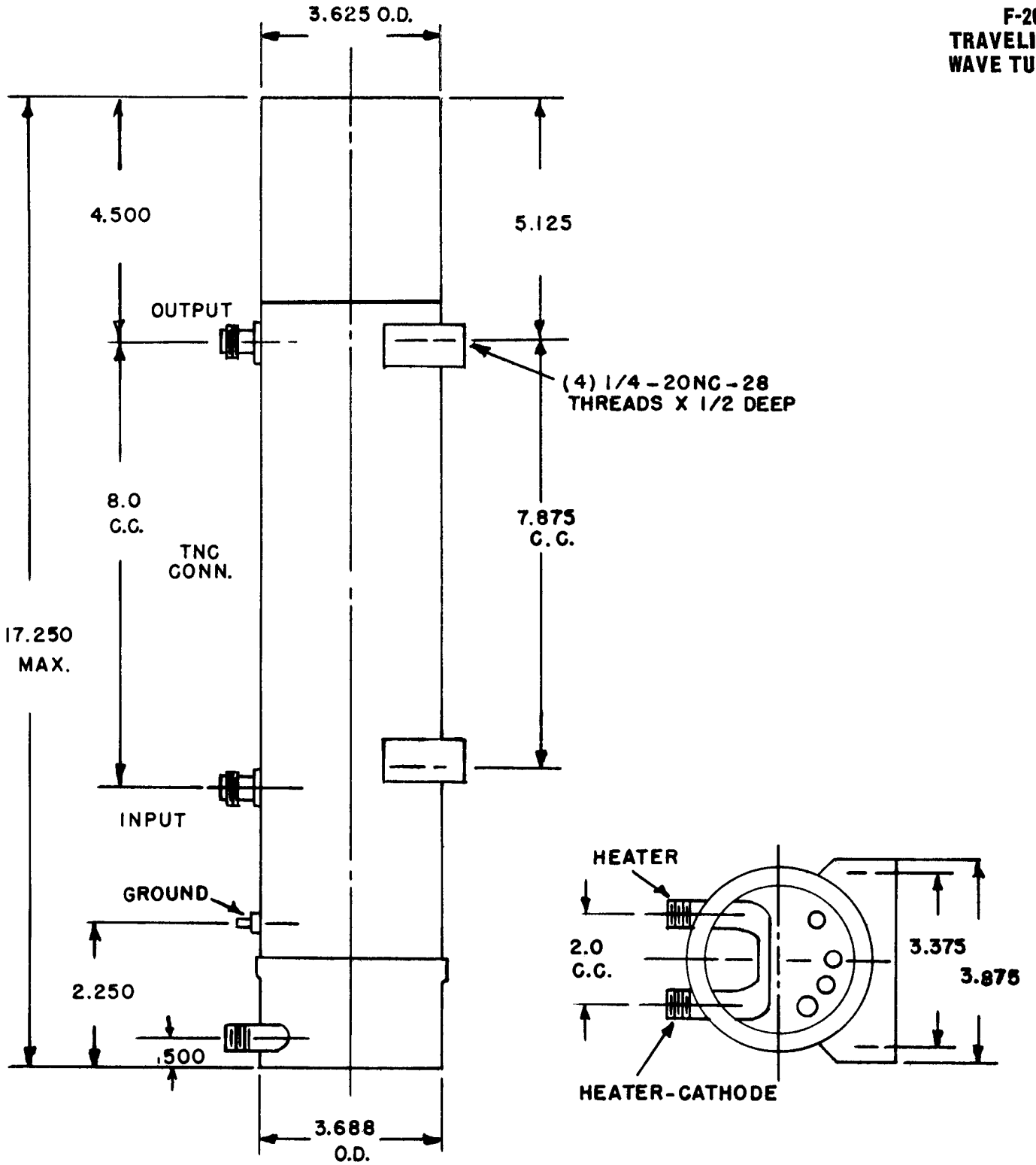

ITT ELECTRON TUBE DIVISION
CLIFTON, NEW JERSEY
INTERNATIONAL TELEPHONE AND TELEGRAPH CORPORATION

F-2059 TRAVELING WAVE TUBE

TENTATIVE

GENERAL DESCRIPTION

The F-2059 is a 100 watt pulse traveling wave amplifier tube having 46 db gain and designed primarily for use in the 2700 to 2900 mc frequency range. It is constructed in a rugged metal envelope with a helix type slow wave structure. The integral matching circuit is in 50 ohm coaxial line and is provided with type "TNC" connectors. The tube is focused by a periodic permanent magnet which is integral with the tube. A convergent beam gun and oxide impregnated cathode are used. Duty cycles up to .01 and pulse widths up to 10 microseconds can be used. A control grid suitablefor grid pulsing is provided.

ELECTRICAL RATINGS, ABSOLUTE VALUES

Heater Voltage	6.3 (±10%)	volts	Maximum Duty Cycle	.01	
Heater Current	3.0	amperes	Maximum Pulse Width (beam)	10	microseconds
Maximum Anode Voltage (Note 1)	5000	volts	Maximum Cathode Current	1.0	ampere peak
Maximum Shell Current	0.5	ampere peak	Maximum Grid Voltage		
Maximum Collector Voltage	5000	volts	Negative	−100	volts
Maximum Collector Dissipation	20	watts average	Positive (with respect to cathode)	200	volts
Maximum R-F Output Power	5	watts average			

ELECTRICAL INFORMATION

Maximum Frequency (Note 2)	2900	mc	Capacitance		
Minimum Frequency (Note 2)	2700	mc	Control Grid to All Other Elements	20	uufd
Minimum Cold Transmission Loss	50	db			

MECHANICAL INFORMATION

Type of Cathode	Oxide Impregnated Unipotential	Weight	10 Pounds	Maximum
Base	(See Outline)	R-F Connections	Type "TNC"	
Type of Envelope	Metal	Type of Cooling		Convection
Mounting Position	Any			

TYPICAL OPERATION AS POWER AMPLIFIER

Frequency	2700 to 2900	mc	Gain	46	db
Anode Voltage (Note 1)	4400	volts	Duty	.01	
Cathode Current	0.5	amperes peak	Pulse Width	5	microseconds
Collector Voltage (tied to shell	4400	volts	Grid Bias (for cut-off)	−30	volts
Collector Current	0.3	amperes peak	Grid Voltage during Pulse	175	volts
Power Output (minimum)	100	watts peak			

NOTE 1: All voltages shown are with respect to cathode. The shell is normally operated at ground potential and the anode connection is made to the shell of the package.

NOTE 2: Useful gain and power output exists below 2700 mc and above 2900 mc and can be utilized by adjusting anode voltage to optimize the frequency range desired. However, bandwidth cannot be extended both upward and downward simultaneously and maximum gain and power output outside the normal bandwidth will be lower than rated values.

NOTE 3: Heater warm up of two minutes before applying high voltage is recommended.

NOTE 4: High voltage must be applied in the absence of proper grid bias.

F-2059
TRAVELING
WAVE TUBE

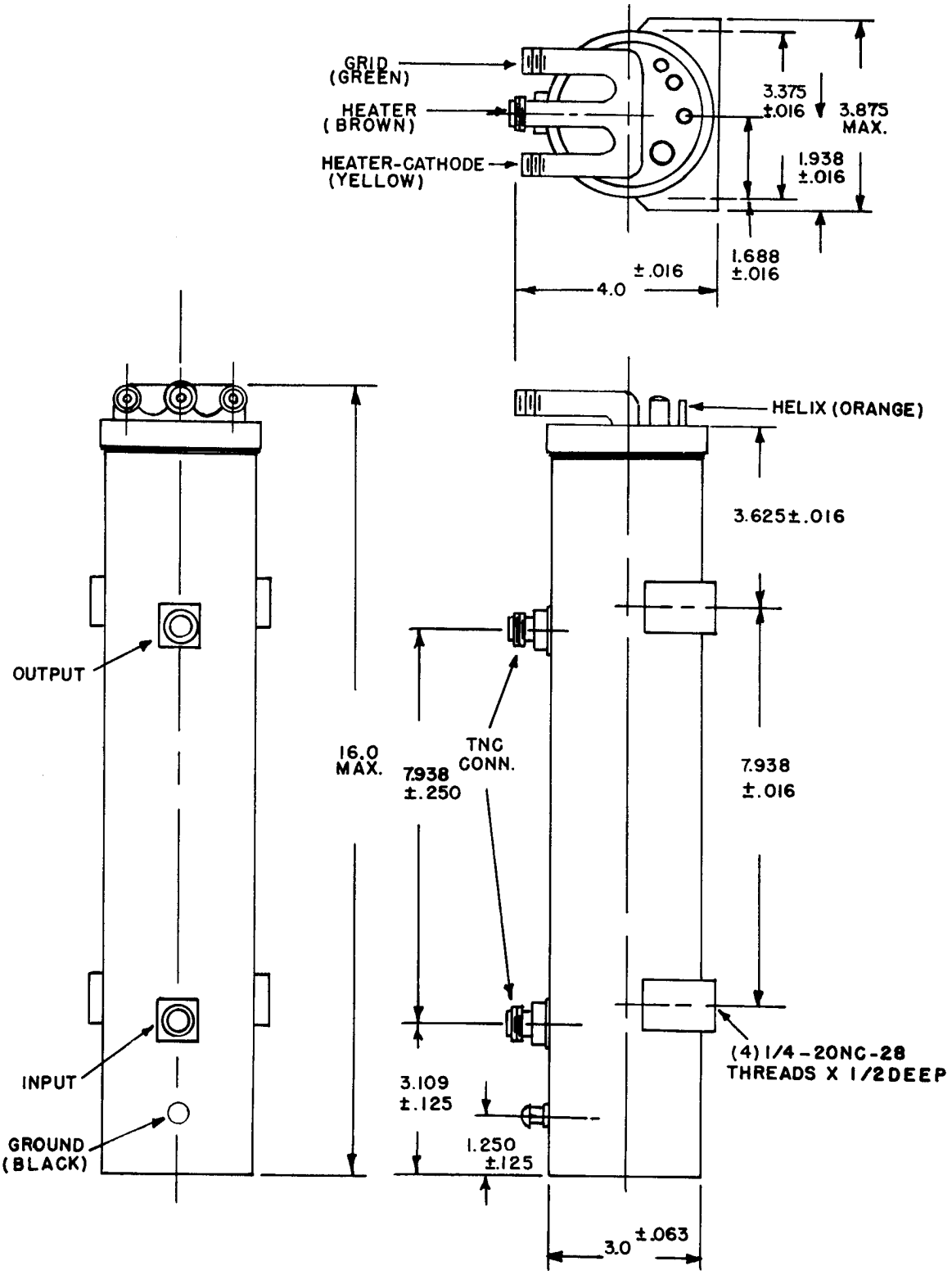

ITT ELECTRON TUBE DIVISION
CLIFTON, NEW JERSEY
INTERNATIONAL TELEPHONE AND TELEGRAPH CORPORATION

F-2060
TRAVELING
WAVE TUBE

TENTATIVE

GENERAL DESCRIPTION:

The F-2060 is a 1500 watt pulse traveling wave amplifier tube having 32 db gain and designed primarily for use in the 3350 to 3650 mc frequency range. It is constructed in a rugged metal envelope with a helix type slow wave structure. The integral matching circuit is in 50 ohm coaxial line and is provided with type "TNC" connectors. The tube is focused by a periodic permanent magnet which is integral with the tube. A convergent beam gun and oxide impregnated cathode are used. Duty cycles up to .01 and pulse widths up to 100 microseconds can be used.

ELECTRICAL RATINGS, ABSOLUTE VALUES

Heater Voltage	6.3 (±10%)	volts	Maximum R-F Input Power	2	watts average
Heater Current	3.0	amperes	Maximum R-F Output Power	30	watts average
Maximum Anode Voltage (Note 1)	8000	volts	Maximum Duty Cycle	.01	
Maximum Helix Current	0.8	ampere peak	Maximum Pulse Width (beam)	100	microseconds
Maximum Collector Voltage	8000	volts	Maximum Cathode Current	2.0	ampere peak
Maximum Collector Dissipation	160	watts average			

ELECTRICAL INFORMATION

Maximum Frequency (Note 2)	3650	mc	Minimum Cold Transmission Loss	50	db
Minimum Frequency (Note 2)	3350	mc			

MECHANICAL INFORMATION

Type of Cathode	Oxide Impregnated Unipotential	Weight (not including magnet)	10 pounds Maximum
Base	(See Outline Drawing)	R-F Connections	"TNC"
Type of Envelope	Metal	Cooling Data	25 cfm of air
Mounting Position	Any		

TYPICAL OPERATION AS POWER AMPLIFIER

Frequency	3350 to 3650	mc	Gain	32	db
Anode Voltage (Note 1)	7200	volts	Duty	.01	
Cathode Current	1.4	amperes peak	Pulse Width	5	microseconds
Collector Voltage (tied to shell)	7200	volts	Small Signal Gain Variation	3	db
Collector Current	0.9	amperes peak	Saturated Power Variation	3	db
Power Output (Minimum)	1500	watts peak			

NOTE 1: All Voltages shown are with respect to cathode. The shell is normally operated at ground potential and the anode connection is made to the shell of the package.

NOTE 2: Useful gain and power output exists below 3350 mc and above 3650 mc and can be utilized by adjusting anode voltage to optimize the frequency range desired. However, bandwidth cannot be extended both upward and downward simultaneously and maximum gain and power output outside the normal bandwidth may be lower than rated values.

NOTE 3: Heater warm up of two minutes before applying high voltage is recommended.

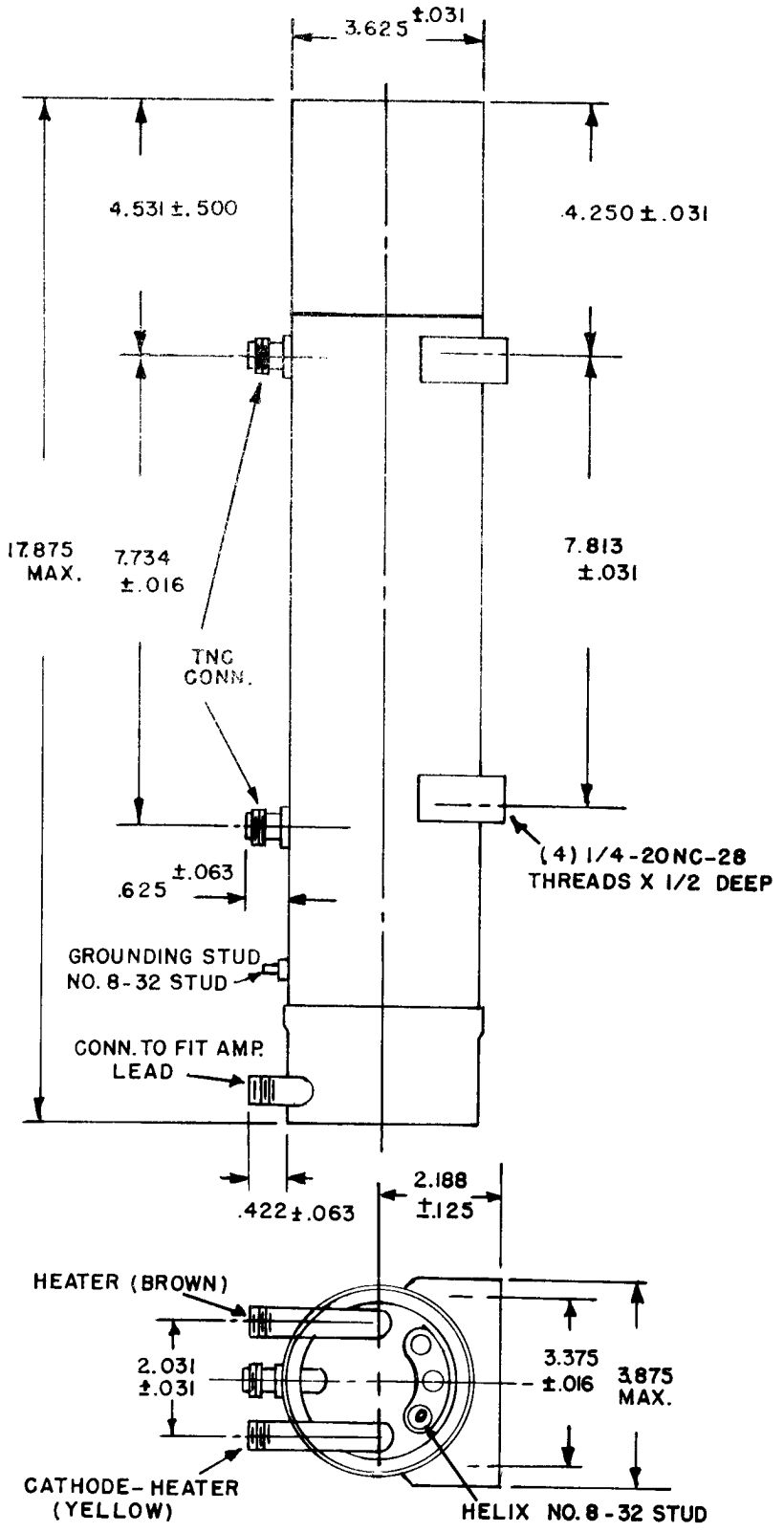
3.625 ±.031
4.531 ± .500
4.250 ± .031
17.875
MAX.
7.734
± .016
7.813
± .031
TNC
CONN.
(4) 1/4-20NC-2B
THREADS X 1/2 DEEP
.625 ±.063
GROUNDING STUD
NO. 8-32 STUD
CONN. TO FIT AMP.
LEAD
.422 ± .063
2.188
± .125
HEATER (BROWN)
2.031
± .031
3.375
± .016
3.875
MAX.
CATHODE-HEATER
(YELLOW)
HELIX NO. 8-32 STUD

ITT ELECTRON TUBE DIVISION
CLIFTON, NEW JERSEY
INTERNATIONAL TELEPHONE AND TELEGRAPH CORPORATION

F-2061 TRAVELING WAVE TUBE

T E N T A T I V E

GENERAL DESCRIPTION:

The F-2061 is a 1000 watt pulse traveling wave amplifier tube having 30 db gain and designed primarily for use in the 2900 to 3100 mc frequency range. It is constructed in a rugged metal envelope with a helix type slow wave structure. The integral matching circuit is in 50 ohm coaxial line and is provided with type "TNC" connectors. The tube is focused by a periodic permanent magnet which is integral with the tube. A convergent beam gun and oxide impregnated cathode are used. Duty cycles up to .02 and pulse widths up to 50 microseconds can be used.

ELECTRICAL RATINGS, ABSOLUTE VALUES

Heater Voltage	6.3 (±10%)	volts	Maximum R-F Input Power	2	watts average
Heater Current	3.0	amperes	Maximum R-F Output Power	40	watts average
Maximum Anode Voltage (Note 1)	8000	volts	Maximum Duty Cycle	.02	
Maximum Shell Current	0.8	ampere peak	Maximum Pulse Width (beam)	50	microseconds
Maximum Collector Voltage	8000	volts	Maximum Cathode Current	2.0	ampere peak
Maximum Collector Dissipation	200	watts average			

ELECTRICAL INFORMATION

Maximum Frequency (Note 2)	3100	mc	Minimum Cold Transmission Loss	50	db
Minimum Frequency (Note 2)	2900	mc			

MECHANICAL INFORMATION

Type of Cathode	Oxide Impregnated Unipotential		Weight	10 pounds	Maximum
Base	(See Outline)		R-F Connections	Type "TNC"	
Type of Envelope		Metal	Cooling Data	25 cfm of air	
Mounting Position		Any			

TYPICAL OPERATION AS POWER AMPLIFIER

Frequency	2900 to 3100	mc	Power Output (minimum)	1000	watts peak
Anode Voltage (Note 1)	7300	volts	Gain	30	db
Cathode Current	1.4	amperes peak	Duty	.02	
Collector Voltage (tied to shell)	7300	volts	Pulse Width	5	microseconds
Collector Current	0.9	amperes peak			

NOTE 1: All voltages shown are with respect to cathode. The shell is normally operated at ground potential and the anode connection is made to the shell of the package.

NOTE 2: Useful gain and power output exists below 2900 mc and above 3100 mc and can be utilized by adjusting anode voltage to optimize the frequency range desired. However, bandwidth cannot be extended both upward and downward simultaneously and maximum gain and power output outside the normal bandwidth will be lower than rated values.

NOTE 3: Heater warm up of two minutes before applying high voltage is recommended.

F-2061
TRAVELING
WAVE TUBE

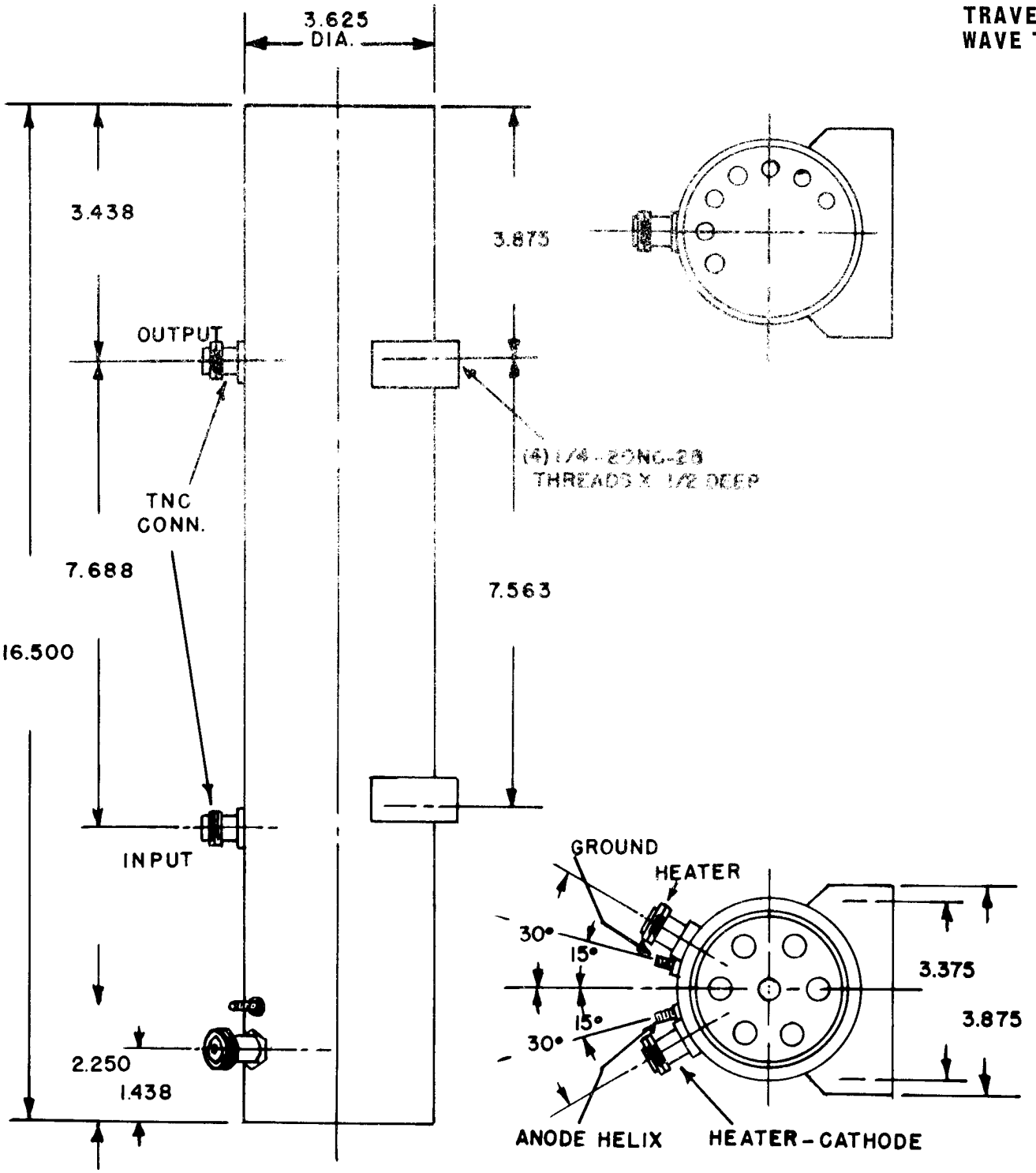

ELECTRON TUBE DIVISION
CLIFTON, NEW JERSEY
INTERNATIONAL TELEPHONE AND TELEGRAPH CORPORATION

F-2062 TRAVELING WAVE TUBE

T E N T A T I V E

GENERAL DESCRIPTION:

The F-2062 is a 1000 watt pulse traveling wave amplifier tube having 30 db gain and designed primarily for use in the 2000 to 4000 mc frequency range. It is constructed in a rugged metal envelope with a helix type slow wave structure. The integral matching circuit is in 50 ohm coaxial line and is provided with type "TNC" connectors. The tube is focused by a periodic permanent magnet which is integral with the tube. A convergent beam gun and oxide impregnated cathode are used. Duty cycles up to .01 and pulse widths up to 10 microseconds can be used. A control grid suitable for grid pulsing is provided.

ELECTRICAL RATINGS, ABSOLUTE VALUES

Heater Voltage	6.3 (±10%)	volts	Maximum R-F Output Power	30	watts average
Heater Current	3.0	amperes	Maximum Duty Cycle	.01	
Maximum Anode Voltage (Note 1)	8000	volts	Maximum Pulse Width (beam)	10	microseconds
Maximum Helix Current	0.8	ampere peak	Maximum Cathode Current	2.0	ampere peak
Maximum Collector Voltage	8000	volts	Maximum Grid Voltage		
Maximum Collector Dissipation	120	watts average	Negative	-100	volts
			Positive (with respect to cathode)	200	volts

ELECTRICAL INFORMATION

Maximum Frequency (Note 2)	4000	mc	Capacitance		
Minimum Frequency (Note 2)	2000	mc	Control Grid to All Other Elements	20	uufd
Minimum Cold Transmission Loss	50	db			

MECHANICAL INFORMATION

Type of Cathode	Oxide Impregnated Unipotential		Weight	10 pounds	Maximum
Base	(See Outline)		R-F Connections	Type "TNC"	
Type of Envelope	Metal		Cooling Data	25 cfm of air	
Mounting Position	Any				

TYPICAL OPERATION AS POWER AMPLIFIER

Frequency	2000 to 4000	mc	Power Output (minimum)	1000	watts peak
Anode Voltage (Note 1)	7500	volts	Gain	30	db
Cathode Current	1.5	amperes peak	Duty	.01	
Collector Voltage (tied to shell)	7500	volts	Pulse Width	5	microseconds
Collector Current	1.0	amperes peak	Grid Bias (for cut-off)	-30	volts
			Grid Voltage during Pulse	175	volts

NOTE 1: All voltages shown are with respect to cathode. The shell is normally operated at ground potential and the anode connection is made to the shell of the package.

NOTE 2: Useful gain and power output exists below 2000 mc and above 4000 mc and can be utilized by adjusting anode voltage to optimize the frequency range desired. However, bandwidth cannot be extended both upward and downward simultaneously and maximum gain and power output outside the normal bandwidth will be lower than rated values.

NOTE 3: Heater warm up of two minutes before applying high voltage is recommended.

NOTE 4: High voltage must not be applied in the absence of proper grid bias.

F-2062
TRAVELING
WAVE TUBE

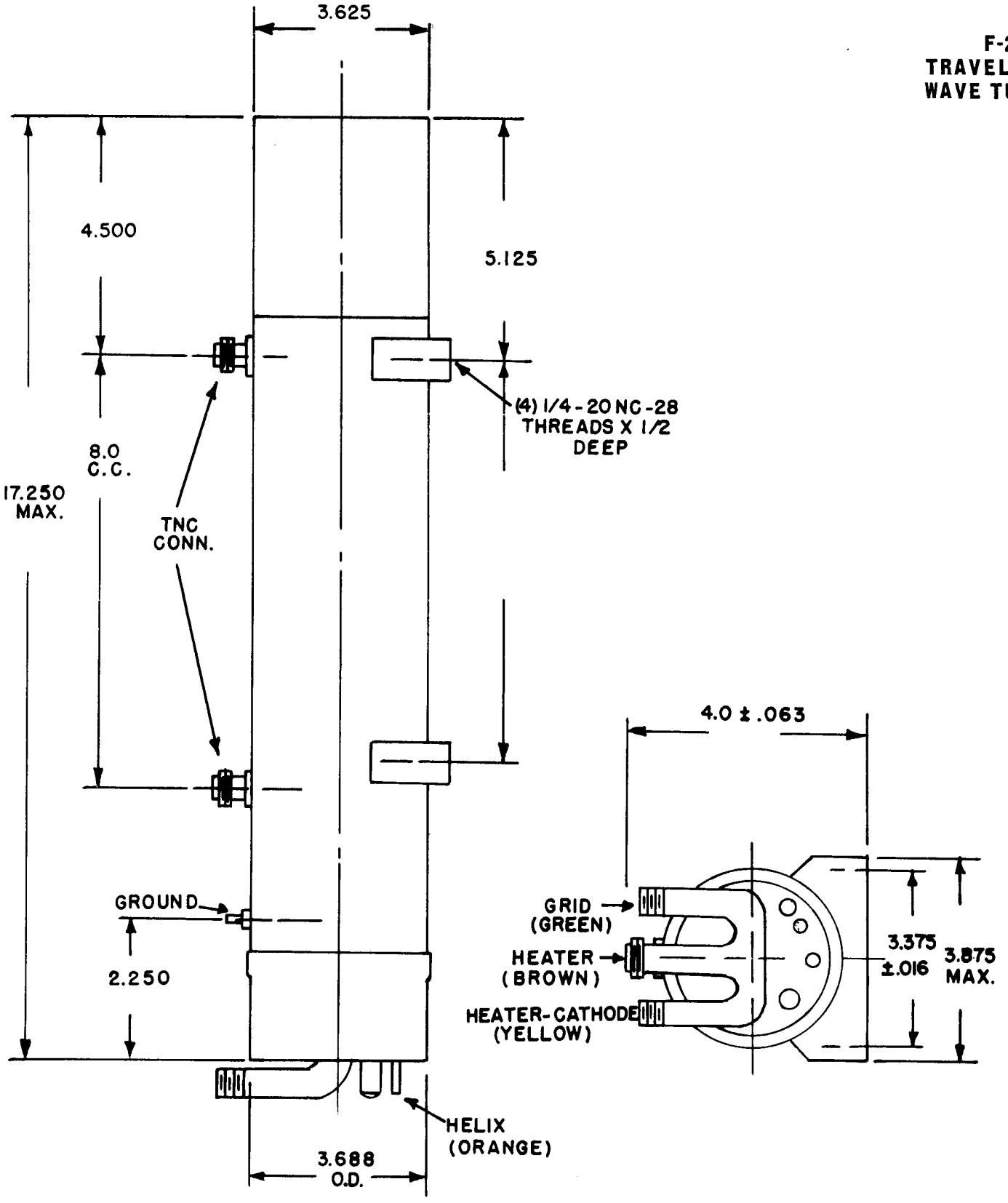

ITT ELECTRON TUBE DIVISION
CLIFTON, NEW JERSEY
INTERNATIONAL TELEPHONE AND TELEGRAPH CORPORATION

F-2063 TRAVELING WAVE TUBE

TENTATIVE

GENERAL DESCRIPTION:

The F-2063 is a 1000 watt pulse traveling wave amplifier tube having 33 db gain and designed primarily for use in the 2500 to 4000 mc frequency range. It is constructed in a rugged metal envelope with a helix type slow wave structure. The integral matching circuit is in 50 ohm coaxial line and is provided with type "TNC" connectors. The tube is focused by a periodic permanent magnet which is integral with the tube. A convergent beam gun and oxide impregnated cathode are used. Duty cycles up to .01 and pulse widths up to 10 microseconds can be used. A control grid suitable for grid pulsing is provided.

ELECTRICAL RATINGS, ABSOLUTE VALUES

Heater Voltage	6.3 (±10%)	volts	Maximum Duty Cycle	.01	
Heater Current	3.0	amperes	Maximum Pulse Width (beam)	10	microseconds
Maximum Anode Voltage (Note 1)	8000	volts	Maximum Cathode Current	20	ampere peak
Maximum Helix Current	0.8	ampere peak	Maximum Grid Voltage		
Maximum Collector Voltage	8000	volts	Negative	-100	volts
Maximum Collector Dissipation	120	watts average	Positive (with respect to cathode)	200	volts
Maximum R-F Output Power	30	watts average			

ELECTRICAL INFORMATION

Maximum Frequency (Note 2)	4000	mc	Capacitance		
Minimum Frequency (Note 2)	2500	mc	Control Grid to All Other Elements	20	uufd
Minimum Cold Transmission Loss	50	db			

MECHANICAL INFORMATION

Type of Cathode	Oxide Impregnated Unipotential		Weight	10 pounds	Maximum
Base	(See Outline)		R-F Connections	Type "TNC"	
Type of Envelope		Metal	Cooling Data	25 cfm of air	
Mounting Position		Any			

TYPICAL OPERATION AS POWER AMPLIFIER

Frequency	2500 to 4000	mc	Power Output (minimum)	1000	watts peak
Anode Voltage (Note 1)	7500	volts	Gain	33	db
Cathode Current	1.5	amperes peak	Duty	.01	
Collector Voltage (tied to shell)	7500	volts	Pulse Width	5	microseconds
Collector Current	1.0	amperes peak	Grid Bias (for cut-off)	-30	volts
			Grid Voltage during Pulse	175	volts

NOTE 1: All voltages shown are with respect to cathode. The shell is normally operated at ground potential and the anode connection is made to the shell of the package.

NOTE 2: Useful gain and power output exists below 2500 mc and above 4000 mc and can be utilized by adjusting anode voltage to optimize the frequency range desired. However, bandwidth cannot be extended both upward and downward simultaneously and maximum gain and power output outside the normal bandwidth will be lower than rated values.

NOTE 3: Heater warm up of two minutes before applying high voltage is recommended.

NOTE 4: High voltage must not be applied in the absence of proper grid bias.

F-2063
TRAVELING
WAVE TUBE

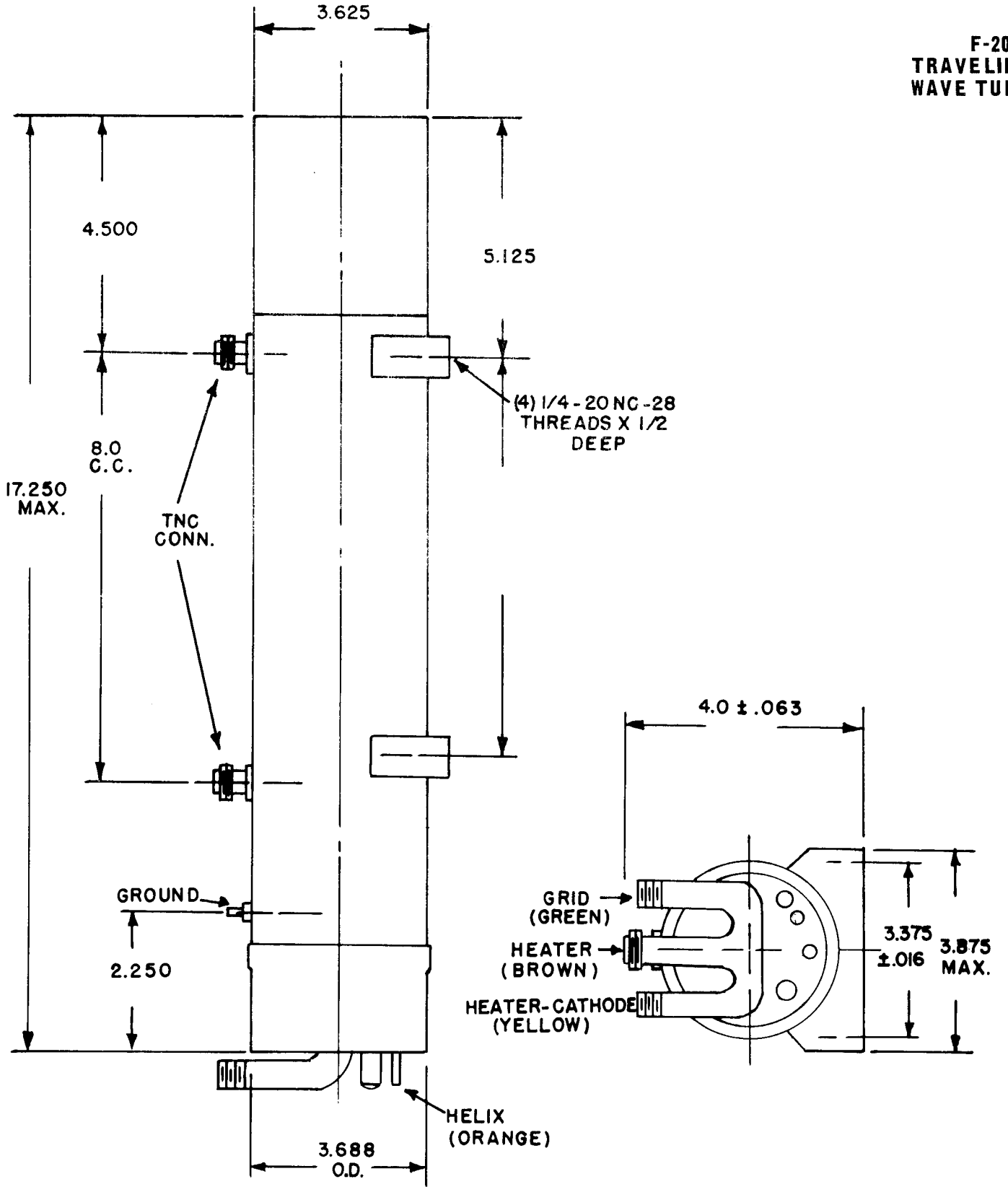

ITT ELECTRON TUBE DIVISION
CLIFTON, NEW JERSEY
INTERNATIONAL TELEPHONE AND TELEGRAPH CORPORATION

F-2064 TRAVELING WAVE TUBE

TENTATIVE

GENERAL DESCRIPTION:

The F-2064 is a 2000 watt pulse traveling wave amplifier tube having 33 db gain and designed primarily for use in the 2800 to 3500 mc frequency range. It is constructed in a rugged metal envelope with a helix type slow wave structure. The integral matching circuit is in 50 ohm coaxial line and is provided with type "TNC" connectors. The tube is focused by a periodic permanent magnet which is integral with the tube. A convergent beam gun and oxide impregnated cathode are used. Duty cycles up to .01 and pulse widths up to 10 microseconds can be used. A control grid suitable for grid pulsing is provided.

ELECTRICAL RATINGS, ABSOLUTE VALUES

Heater Voltage	6.3 (+10%)	volts	Maximum Duty Cycle	.01	
Heater Current	3.0	amperes	Maximum Pulse Width (beam)	10	microseconds
Maximum Anode Voltage (Note 1)	8000	volts	Maximum Cathode Current	2.0	ampere peak
Maximum Helix Current	0.8	ampere peak	Maximum Grid Voltage		
Maximum Collector Voltage	8000	volts	Negative	-100	volts
Maximum Collector Dissipation	120	watts average	Positive (with respect to cathode)	200	volts
Maximum R-F Output Power	30	watts average			

ELECTRICAL INFORMATION

Maximum Frequency (Note 2)	3500	mc	Capacitance		
Minimum Frequency (Note 2)	2800	mc	Control Grid to All Other Elements	20	uufd
Minimum Cold Transmission Loss	50	db			

MECHANICAL INFORMATION

Type of Cathode	Oxide Impregnated Unipotential	Weight	10 pounds	Maximum
Base	(See Outline)	R-F Connections	Type "TNC"	
Type of Envelope	Metal	Cooling Data	25 cfm of air	
Mounting Position	Any			

TYPICAL OPERATION AS POWER AMPLIFIER

Frequency	2800 to 3500	mc	Power Output (minimum)	1000	watts peak
Anode Voltage (Note 1)	7500	volts	Gain	33	db
Cathode Current	1.5	amperes peak	Duty	.01	
Collector Voltage (tied to shell)	7500	volts	Pulse Width	5	microseconds
Collector Current	1.0	amperes peak	Grid Bias (for cut-off)	-30	volts
			Grid Voltage during Pulse	175	volts

NOTE 1: All voltages shown are with respect to cathode. The shell is normally operated at ground potential and the anode connection is made to the shell of the package.

NOTE 2: Useful gain and power output exists below 2800 mc and above 3500 mc and can be utilized by adjusting anode voltage to optimize the frequency range desired. However, bandwidth cannot be extended both upward and downward simultaneously and maximum gain and power output outside the normal bandwidth will be lower than rated values.

NOTE 3: Heater warm up of two minutes before applying high voltage is recommended.

NOTE 4: High voltage must not be applied in the absence of proper grid bias.

F-2064
TRAVELING
WAVE TUBE

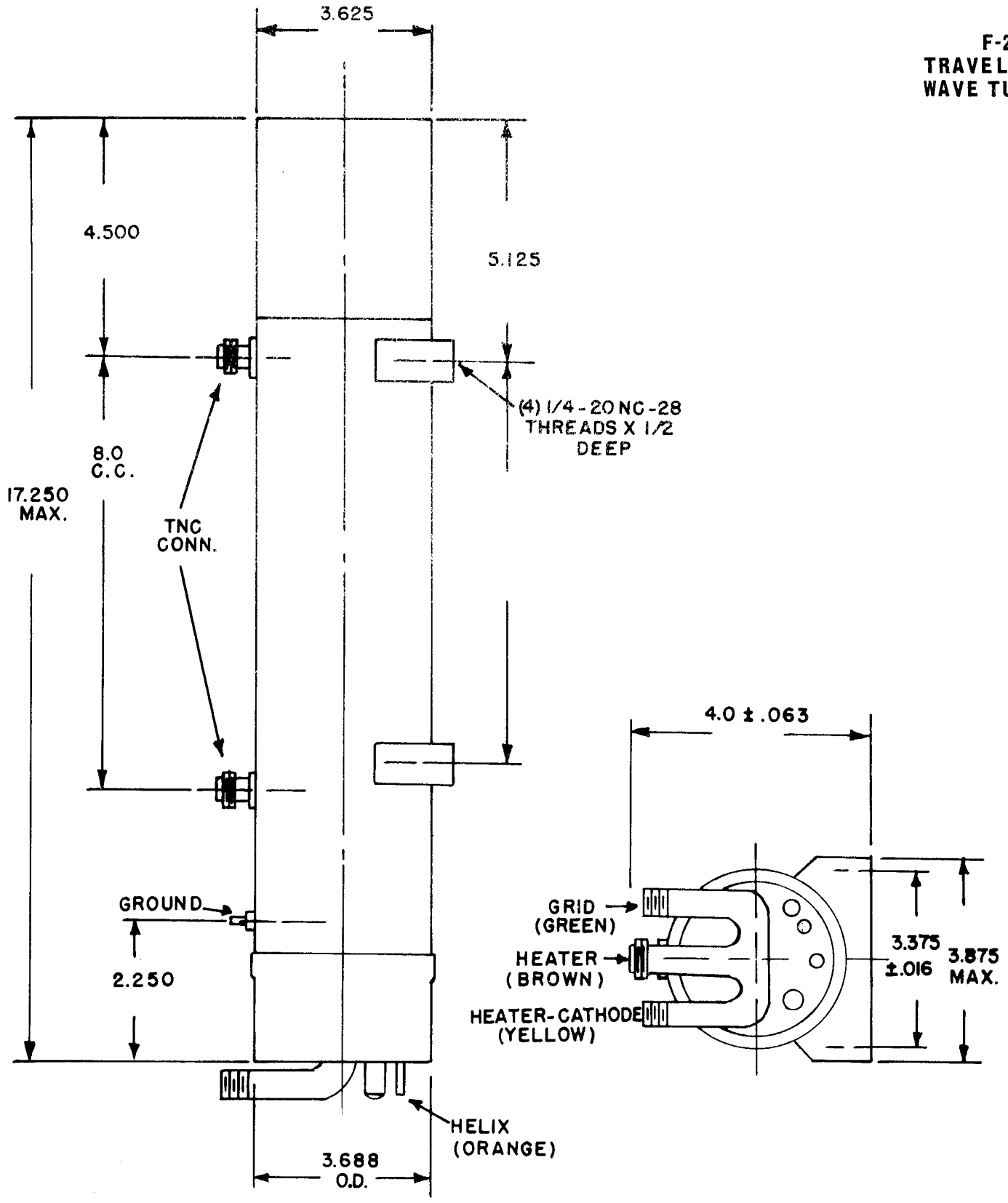

ITT ELECTRON TUBE DIVISION
CLIFTON, NEW JERSEY
INTERNATIONAL TELEPHONE AND TELEGRAPH CORPORATION

F-2065 TRAVELING WAVE TUBE

TENTATIVE

GENERAL DESCRIPTION:

The F-2065 is a 1000 watt pulse traveling wave amplifier tube having 31 db gain and designed primarily for use in the 2000 to 4000 mc frequency range. It is constructed in a rugged metal envelope with a helix type slow wave structure. The integral matching circuit is in 50 ohm coaxial line and is provided with type "TNC" connectors. The tube is focused by a periodic permanent magnet which is integral with the tube. A convergent beam gun and oxide impregnated cathode are used. Duty cycles up to .01 and pulse widths up to 100 microseconds can be used.

ELECTRICAL RATINGS, ABSOLUTE VALUES

Heater Voltage	6.3 (±10%)	volts	Maximum R-F Input Power	2	watts average
Heater Current	3.0	amperes	Maximum R-F Output Power	30	watts average
Maximum Anode Voltage (Note 1)	8000	volts	Maximum Duty Cycle	.01	
Maximum Shell Current	0.8	ampere peak	Maximum Pulse Width (beam)	100	microseconds
Maximum Collector Voltage	8000	volts	Maximum Cathode Current	2.0	ampere peak
Maximum Collector Dissipation	160	watts average			

ELECTRICAL INFORMATION

Maximum Frequency (Note 2)	4000	mc	Minimum Cold Transmission Loss	50	db
Minimum Frequency (Note 2)	2000	mc			

MECHANICAL INFORMATION

Type of Cathode	Oxide Impregnated Unipotential	Weight	10 pounds	Maximum
Base	(See Outline)	R-F Connections	Type "TNC"	
Type of Envelope	Metal	Cooling Data	25 cfm of air	
Mounting Position	Any			

TYPICAL OPERATION AS POWER AMPLIFIER

Frequency	2000 to 4000	mc	Power Output (minimum)	1000	watts peak
Anode Voltage (Note 1)	7300	volts	Gain	31	db
Cathode Current	1.4	amperes peak	Duty	.01	
Collector Voltage (tied to shell)	7300	volts	Pulse Width	5	microseconds
Collector Current	0.9	amperes peak			

NOTE 1: All voltages shown are with respect to cathode. The shell is normally operated at ground potential and the anode connection is made to the shell of the package.

NOTE 2: Useful gain and power output exists below 2000 mc and above 4000 mc and can be utilized by adjusting anode voltage to optimize the frequency range desired. However, bandwidth cannot be extended both upward and downward simultaneously and maximum gain and power output outside the normal bandwidth will be lower than rated.

NOTE 3: Heater warm up of two minutes before applying high voltage is recommended.

F-2065
TRAVELING
WAVE TUBE

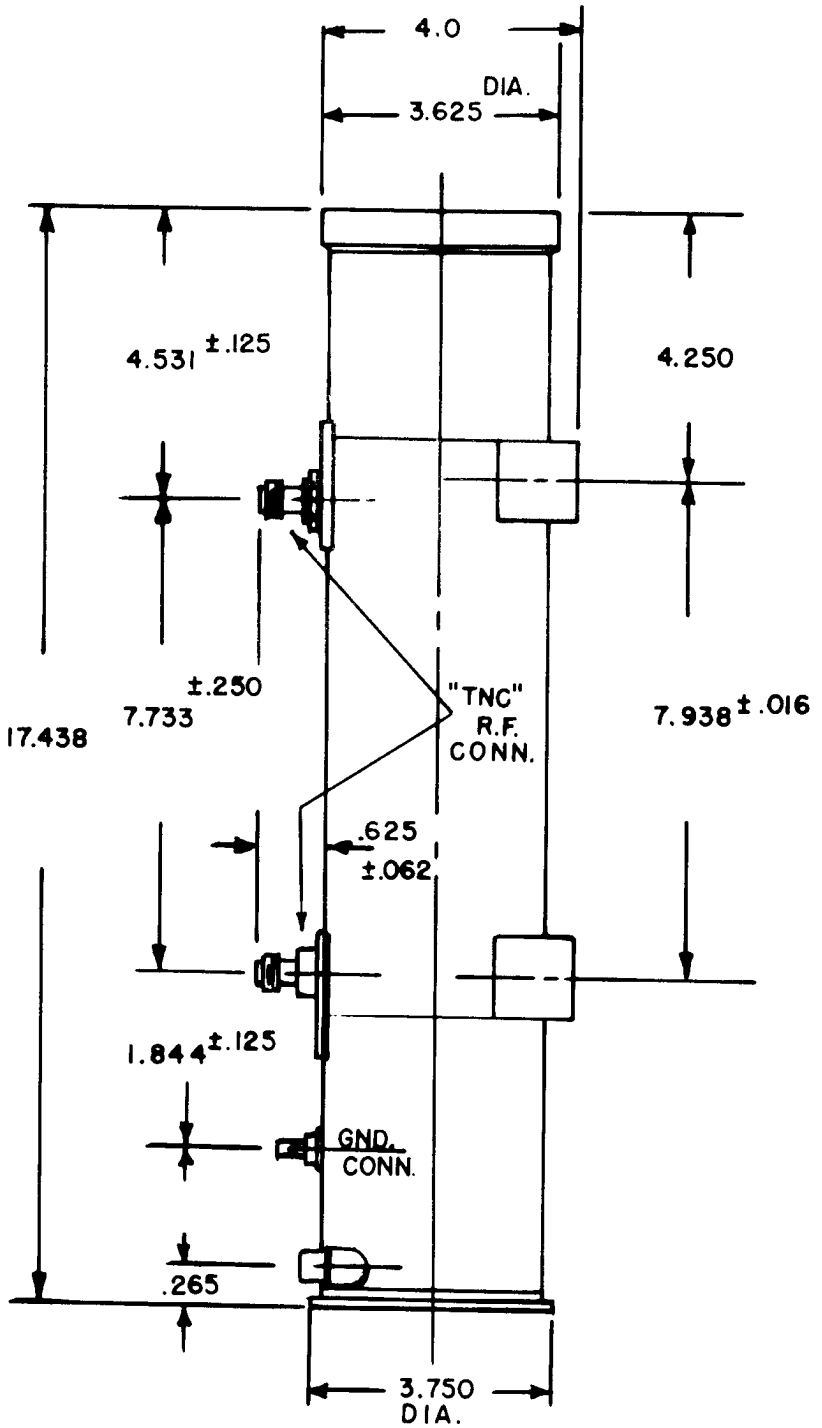

ELECTRON TUBE DIVISION
P.O. Box 100
Easton, Pennsylvania 18042
Telephone 215 252-7331

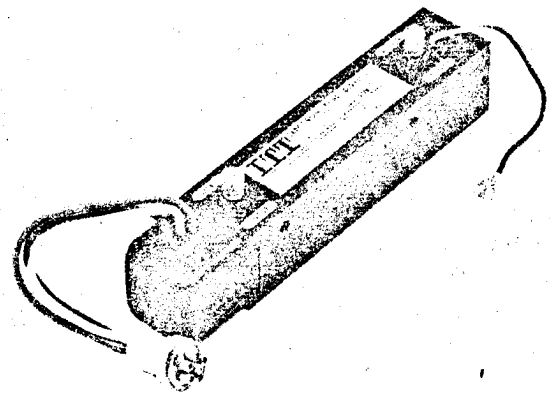

F-2085

TRAVELING WAVE TUBE

DESCRIPTION

The tube type F-2085 is a 1.0 kilowatt grid pulsed traveling-wave amplifier having a minimum gain of 34 db over a frequency range of 7.0 to 11.0 GH_z. The tube is a helix type TWT, PPM focused and of metal-ceramic construction for rugged environmental applications. The tube is conduction cooled and may be mounted in any position. The maximum operating duty cycle is 1.0 percent at a maximum pulse width of 10 microseconds. The F-2085 has type TNC coaxial RF connectors and an isolated collector for monitoring electron beam transmission.

RF PERFORMANCE

	Typical Values	Performance Limits
Frequency	7.0-11.0 GH_z	7.0-11.0 GH_z
Pk Power Output	1200 Watts	1000 Watts Min.
Gain at 1.0 KW Pk Pwr (Note 2)	37 db	34 db Min.
Small Signal Gain (Note 3)	43 db	40 db Min.
Duty Cycle	.01	.01

ELECTRICAL REQUIREMENTS

	Typical Values	Performance Limits		
		Min.	Max.	Units
Cathode Voltage	-10.5	-9.5	-11.0	KV
Cathode Current	1.5		1.7	Amp Pk
Heater Volts	6.3	6.0	6.6	Volts
Heater Current	3.1	3.0	4.0	Amp
Grid Bias Voltage (Notes 1,2)	-90	-90	-200	Volts
Grid Pulse Voltage (Note 1)	200	160	270	Volts
Grid Capacitance to all	24		25	uuf
Cathode Capacitance to all	23		25	uuf
Grid Current	.200		.400	Amp Pk

MECHANICAL

RF Connections	TNC
DC Connections	Winchester-PM6P-LSH Type II
Cooling (Note 4)	Conduction
Weight	6.0 lbs.
Mounting Position (Note 5)	Any
Construction	Metal-Ceramic
Focusing	PPM

ENVIRONMENTAL

Shock	60G, 11 millisec pulse
Vibration	10G, cycles 5-500
Operating Temperature	0°C to 75°C
Non-Oper. Temperature	-62°C to +75°C
Altitude	Any

NOTE 1 Voltages with respect to cathode.

NOTE 2 High voltage must NOT be applied in absence of proper Grid bias.

NOTE 3 Modified tubes with small signal and power gains flat to within ±2 db can be provided upon special request.

NOTE 4 For proper conduction cooling the tube must be securely fastened to a flat heat sink surface. The use of heat sink compound (Astrodyne Conductive Compound 829 or equivalent) is recommended, and the temperature of the heat sink must NOT exceed 90° C.

NOTE 5 Mounting screws must be of non-magnetic material.

ELECTRON TUBE DIVISION
P.O. BOX 100
Easton, Pennsylvania 18042
Telephone 215 252-7331

F-2131

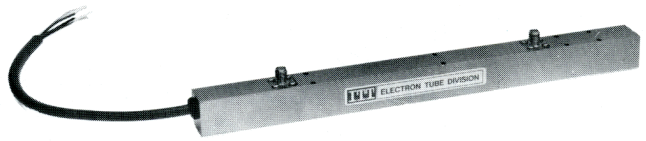

TRAVELING WAVE TUBE

DESCRIPTION

The tube type 2131 is a miniature, lightweight, 25 watt CW traveling wave tube amplifier covering the frequency range of 7.0 to 17 GHz with 50 dB small signal gain. The tube uses a helix type slow wave structure and is PPM focused with samarium cobalt magnets. It is of metal-ceramic construction for rugged environmental applications. The tube is conduction cooled and may be mounted in any position. The collector is isolated and may be depressed up to 50% of the cathode voltage. Type SMA coaxial fittings are provided for RF input and output. An anode electrode is provided that may be used for gain, current control and ion trapping.

RF PERFORMANCE

	Typical Values	Performance Limits
Frequency	7.0-17.0 GHz	7.0-17.0 GHz
Output Power	30 Watts	20 Watts Min.
Power Gain	57 dB	45 dB Min.
Noise Figure	30 dB	32 dB Max.
Duty Cycle	CW	CW

ELECTRICAL REQUIREMENTS

	Typical	Performance Limits		
	Values	Min.	Max.	Units
Cathode Voltage	—3900	—3600	—4000	Volts
Cathode Current	95	—	130	mA
Anode Voltage	180	—4000	500	Volts
Heater Voltage	6.3	6.0	6.6	Volts
Heater Current	.7	—	.8	Amp
Helix Current	5	—	12	mA
Collector Voltage	—1950	—	—2000	Volts

MECHANICAL

RF Connections	SMA Female
DC Connections	Flying Leads
Cooling (NOTE 1)	Conduction
Weight	.75 Pounds
Mounting Position	Any
Construction	Metal-Ceramic
Focusing	PPM

ENVIRONMENTAL

Shock	40G, 11 millisec
Vibration	30G, 5-2000 cycles
Temperature	—45 to +85° C

NOTE 1: For proper conduction cooling the tube must be securely fastened to a flat heat sink surface. The use of heat sink compound (astrodyne 829 or equivalent) is recommended.

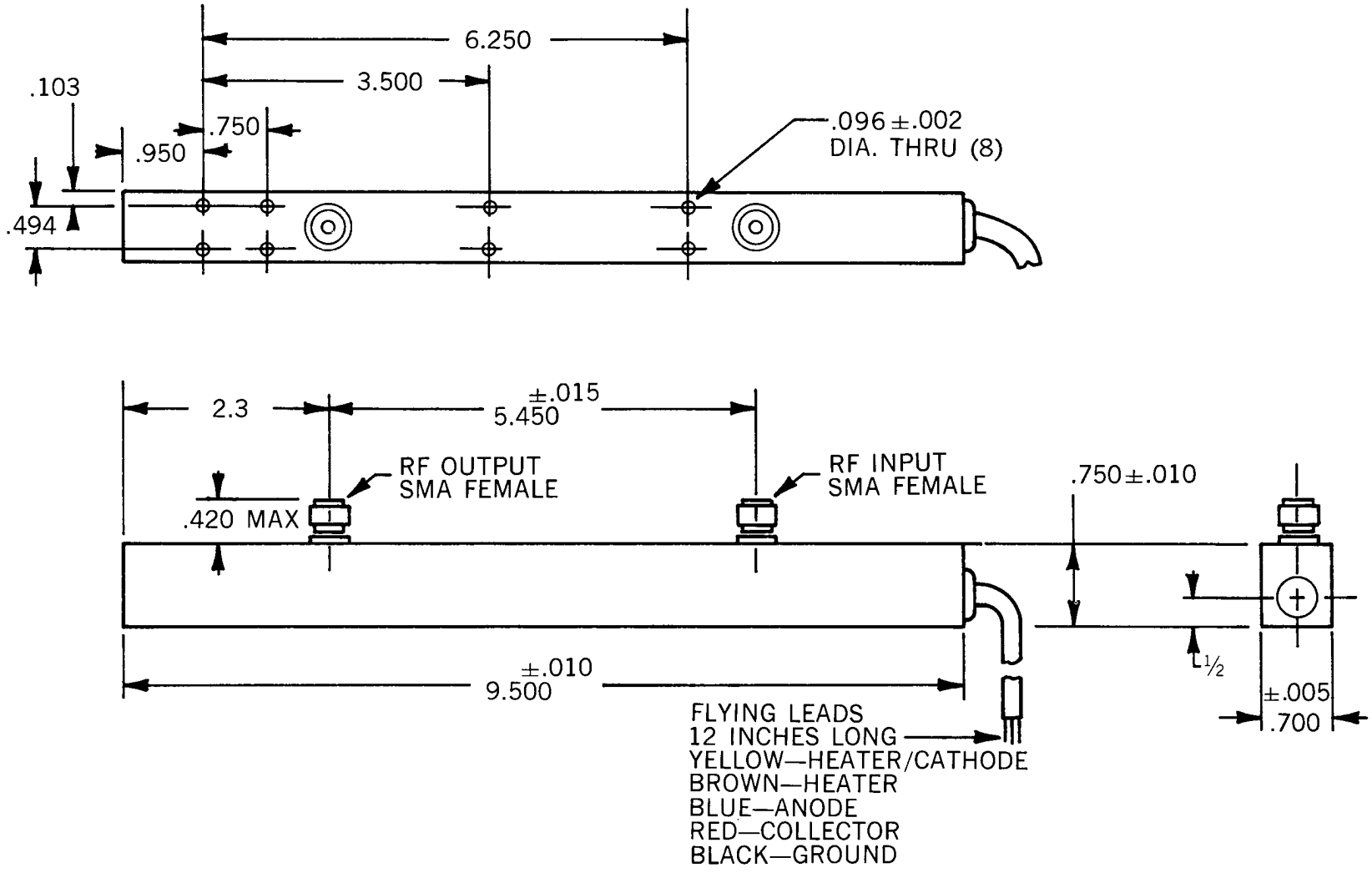

F-2131 OUTLINE

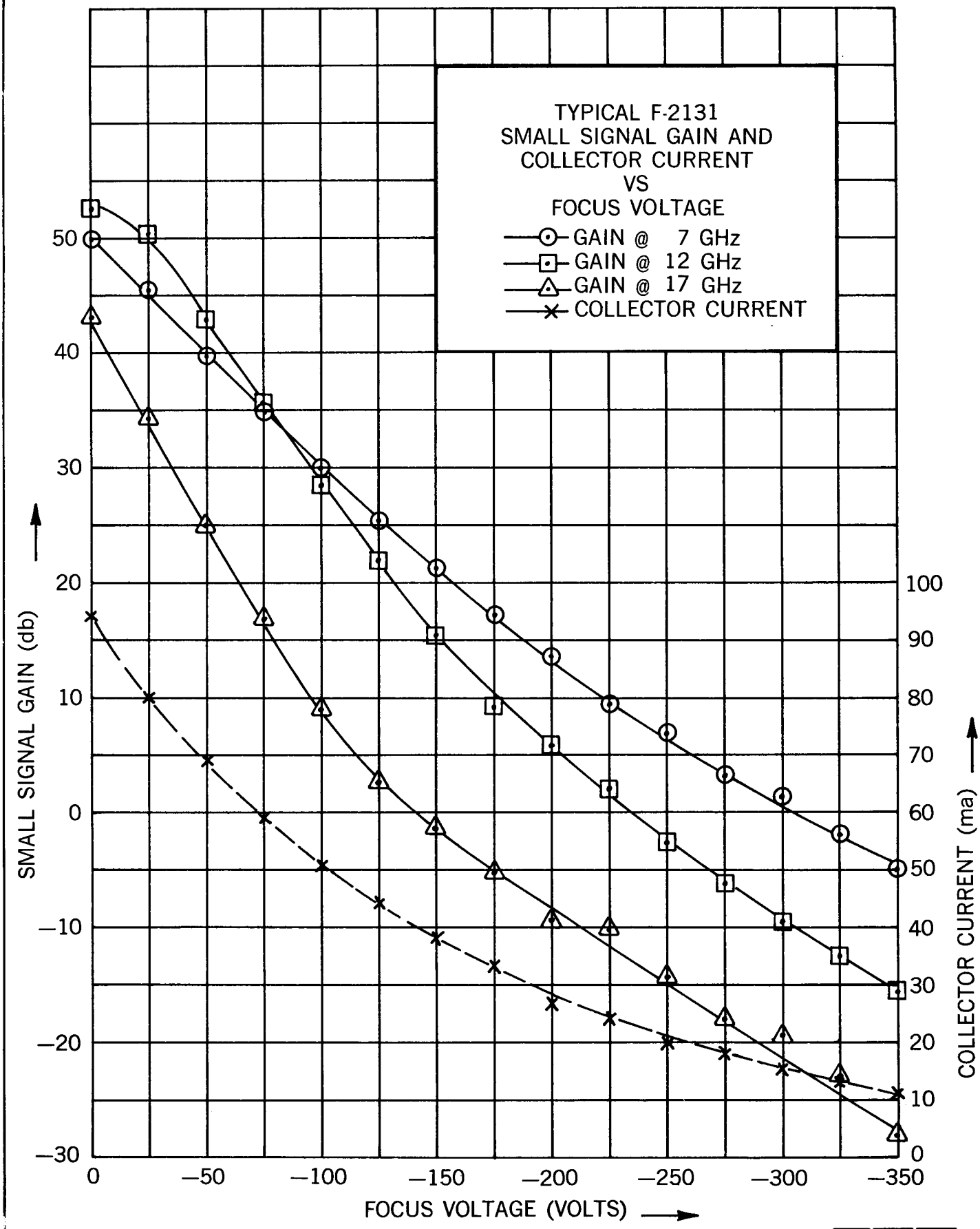

3/76

ELECTRON TUBE DIVISION ITT
P.O. Box 100 Easton, Pennsylvania 18042

F-2131

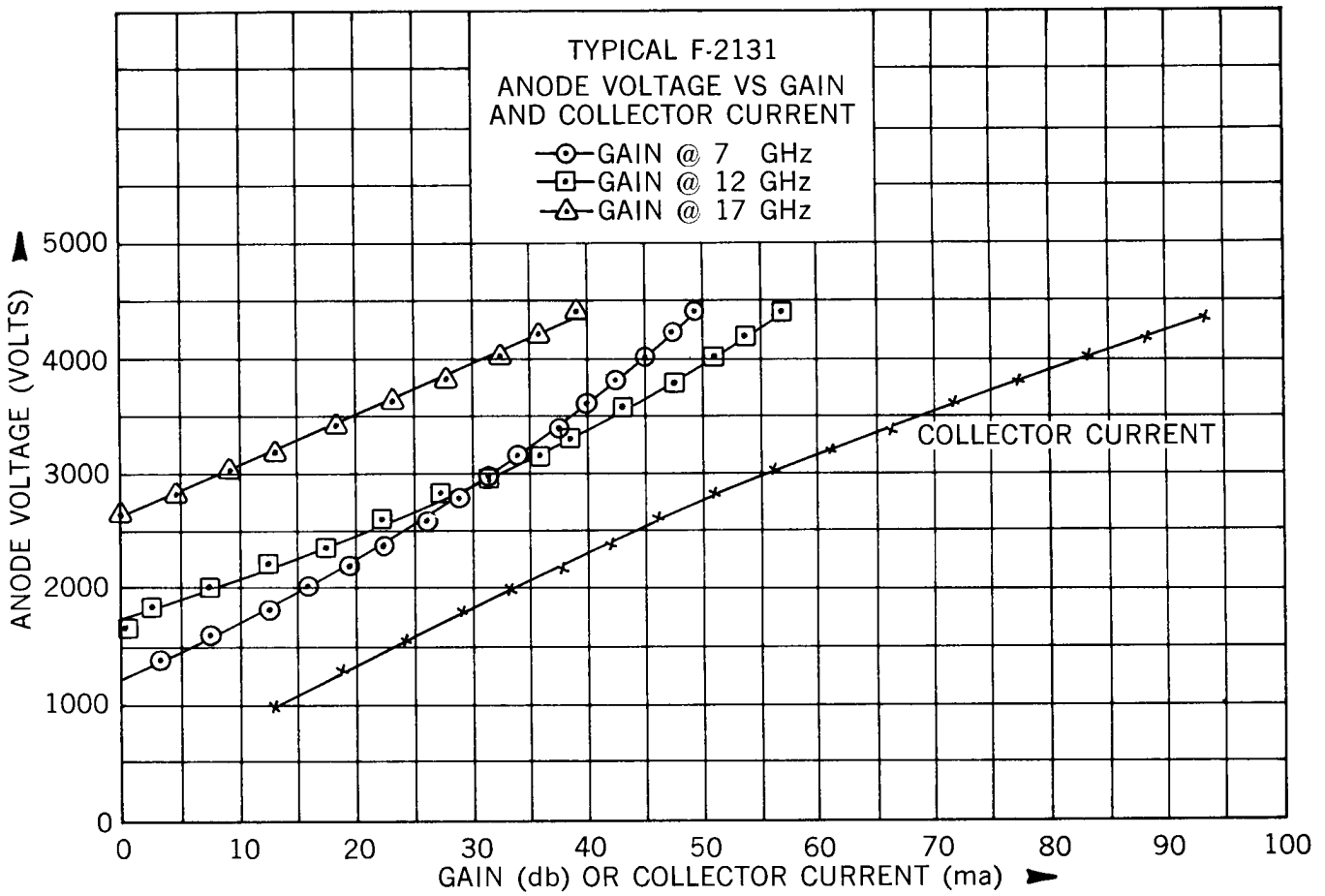
TYPICAL F-2131
ANODE VOLTAGE VS GAIN
AND COLLECTOR CURRENT
GAIN @ 7 GHz
GAIN @ 12 GHz
GAIN @ 17 GHz
COLLECTOR CURRENT
ANODE VOLTAGE (VOLTS)
0
1000
2000
3000
4000
5000
0
10
20
30
40
50
60
70
80
90
100
GAIN (db) OR COLLECTOR CURRENT (ma)

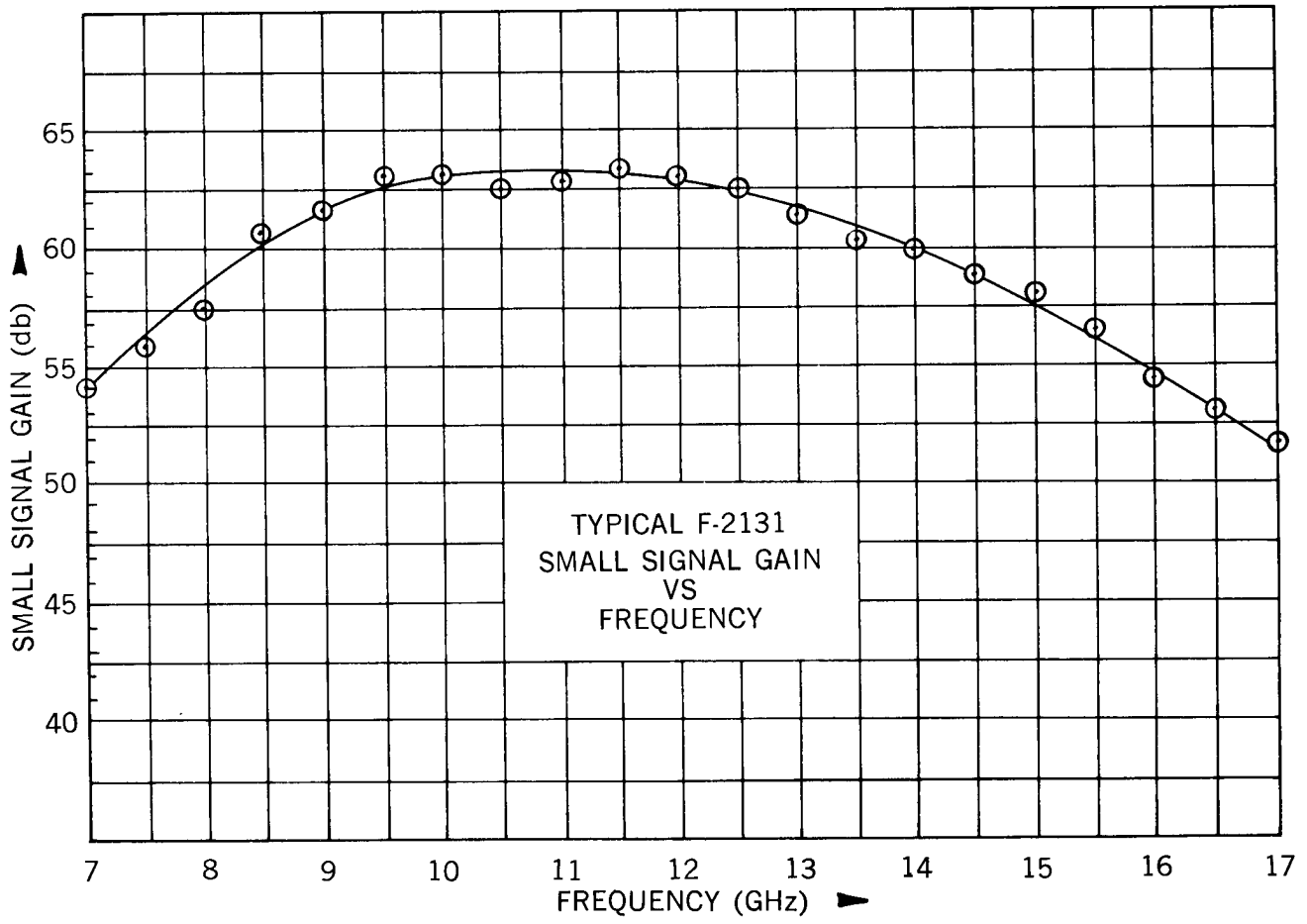
TYPICAL F-2131
SMALL SIGNAL GAIN
VS
FREQUENCY
SMALL SIGNAL GAIN (db)
40
45
50
55
60
65
7
8
9
10
11
12
13
14
15
16
17
FREQUENCY (GHz)

F-2131

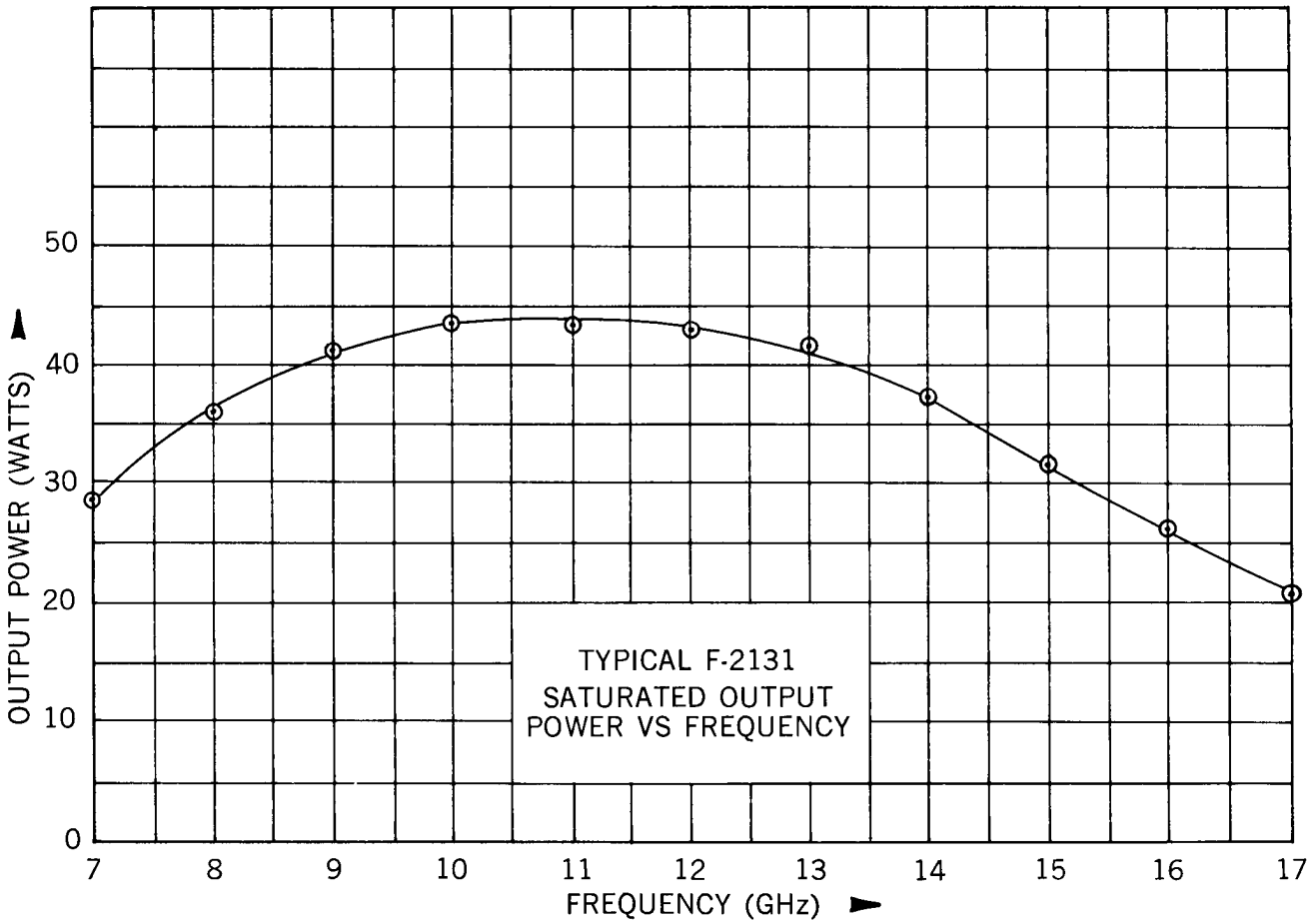

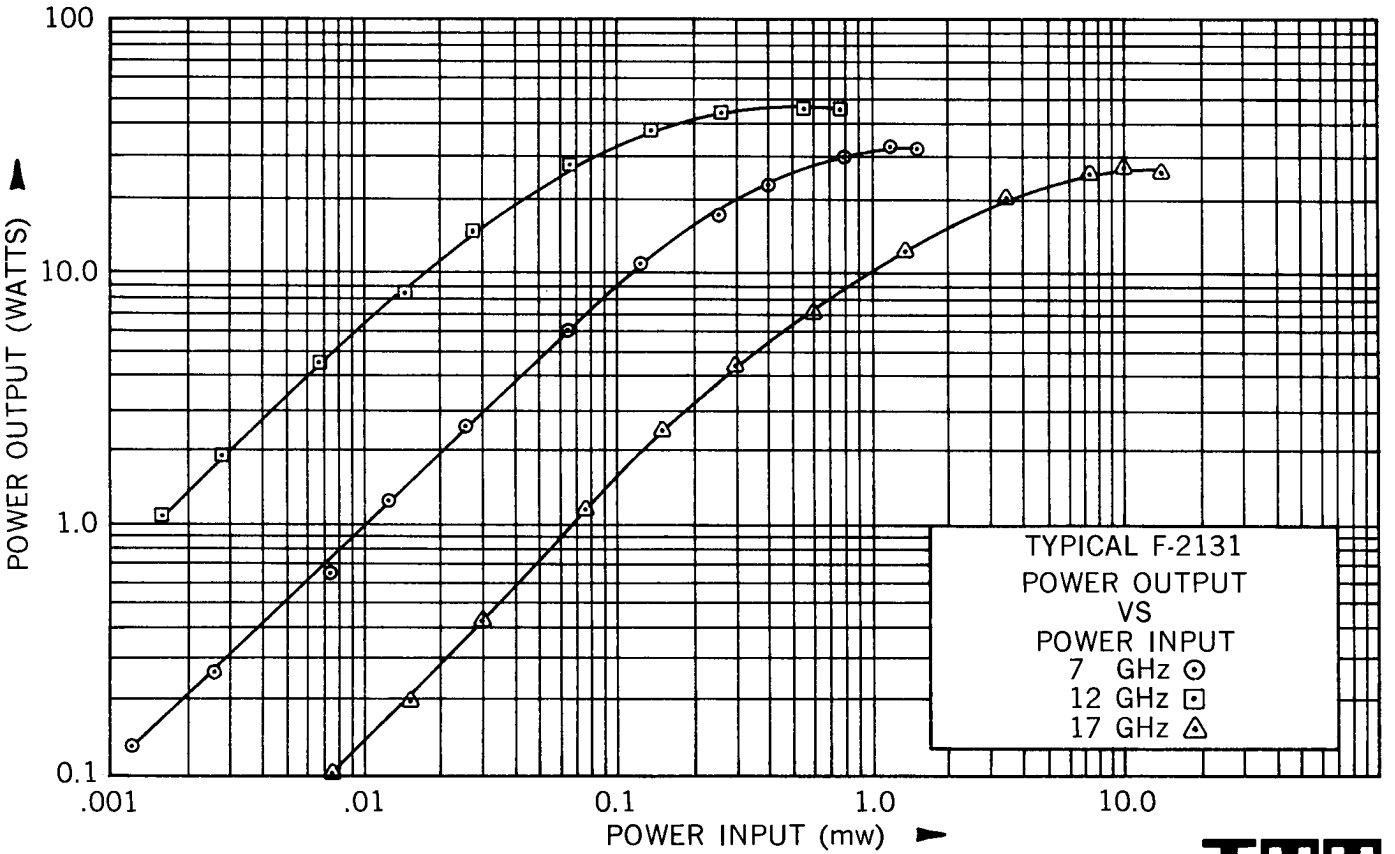

ELECTRON TUBE DIVISION ITT

Box 100, Easton, Pennsylvania 18042 Telephone (215) 252-7331

2/76

ELECTRON TUBE DIVISION
P.O. BOX 100
Easton, Pennsylvania 18042
Telephone 215 252-7331

F-2147

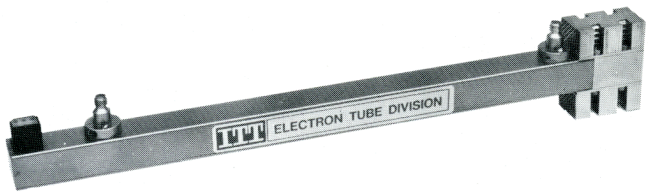

TRAVELING WAVE TUBE

DESCRIPTION

The tube type 2147 is a miniature, lightweight, very broad band 12 watt CW traveling wave tube amplifier covering the frequency range of 2.5 to 7.5 GHz with 50 dB small signal gain. The tube uses a helix type slow-wave structure and is PPM focused with samarium cobalt magnets. It is of metal-ceramic construction for rugged environmental applications. The tube can be either conduction or air cooled and may be mounted in any position. The collector is isolated and may be depressed up to 50% of the cathode voltage. Type SMA coaxial fittings are provided for RF input and output. The tube may also be equipped with QRM RF fittings which make the tube completely plug-in in a blind rack and panel mounting fashion. A very small AMP six-pin subminiature plug (#862584-1) is used for d.c. connection to the tube. An anode electrode is provided that may be used for gain, current control and ion trapping. A focus control is also provided which can also be used for gain control.

RF PERFORMANCE

	Typical Values	Performance Limits
Frequency	2.5-7.5 GHz	2.5-7.5 GHz
Output Power	15 Watts	12 Watts Min.
Power Gain	47 dB	45 dB Min.
Noise Figure	29 dB	32 dB Max.
Duty Cycle	CW	CW

ELECTRICAL REQUIREMENTS

	Typical Values	Performance Limits Min.	Max.	Units
Cathode Voltage	—2150	—2100	—2200	Volts
Cathode Current	80	—	95	mA
Anode Voltage	180	—2200	500	Volts
Heater Voltage	6.3	6.0	6.6	Volts
Heater Current	.8	—	1.0	Amp
Helix Current	5	—	16	mA
Collector Voltage	—950	—	—1075	Volts

MECHANICAL

RF Connections	SMA Female
DC Connections	AMP Six-Pin Subminiature #862584-1
Cooling (NOTE 1)	Conduction or Air Cooling
Weight	1.0 Pounds
Mounting Position	Any
Construction	Metal-Ceramic
Focusing	PPM

ENVIRONMENTAL

Shock	40G, 11 Millisec
Vibration	30G, 5-2000 Cycles
Temperature	—40 to +85° C

NOTE 1: For proper conduction cooling, the tube must be securely fastened to a flat heat sink surface. The use of heat sink compound (Astrodyne 829 or equivalent) is recommended. Air cooling fins can also be supplied to make the tube air cooled.

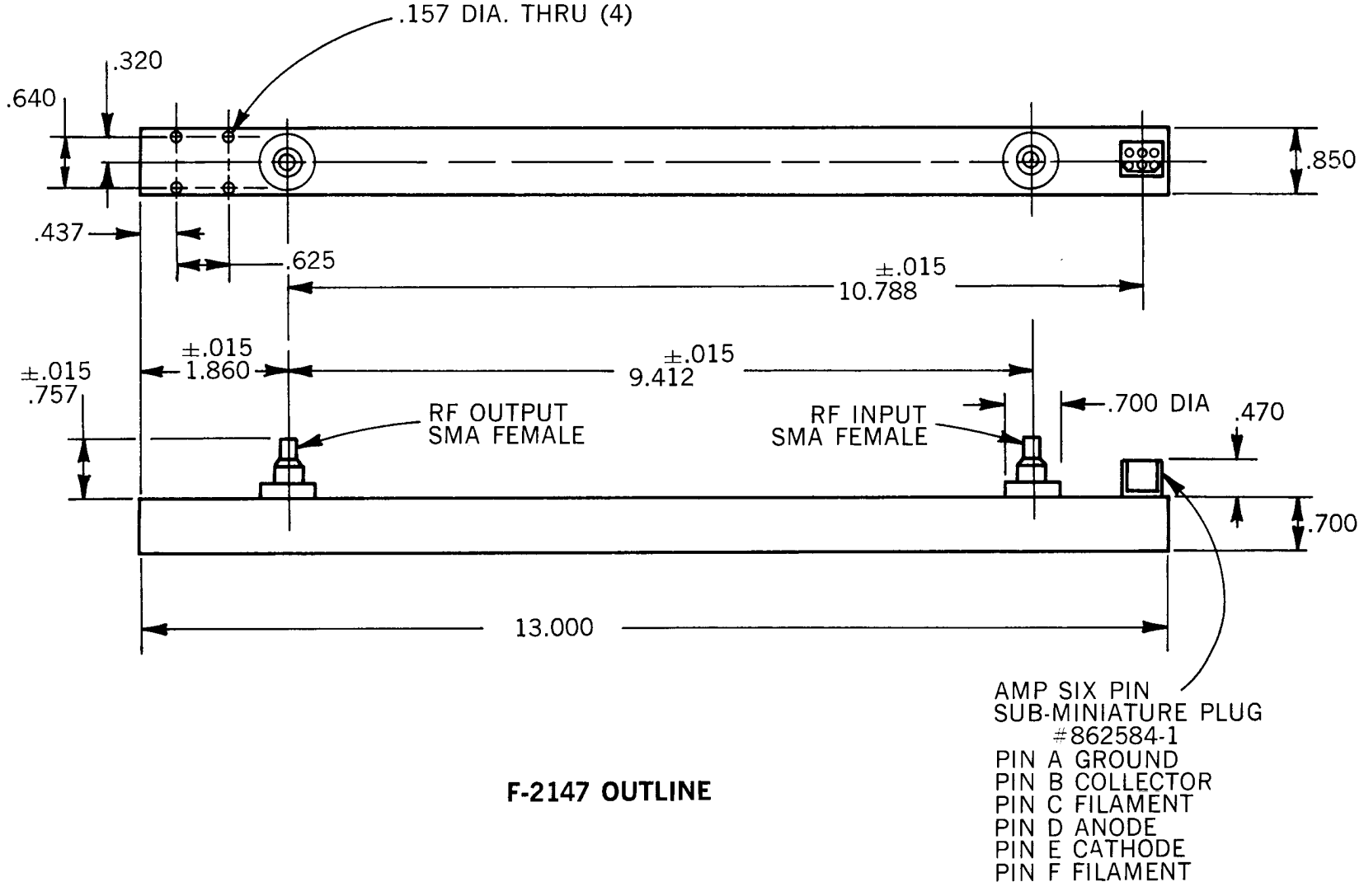

F-2147 OUTLINE

F-2147

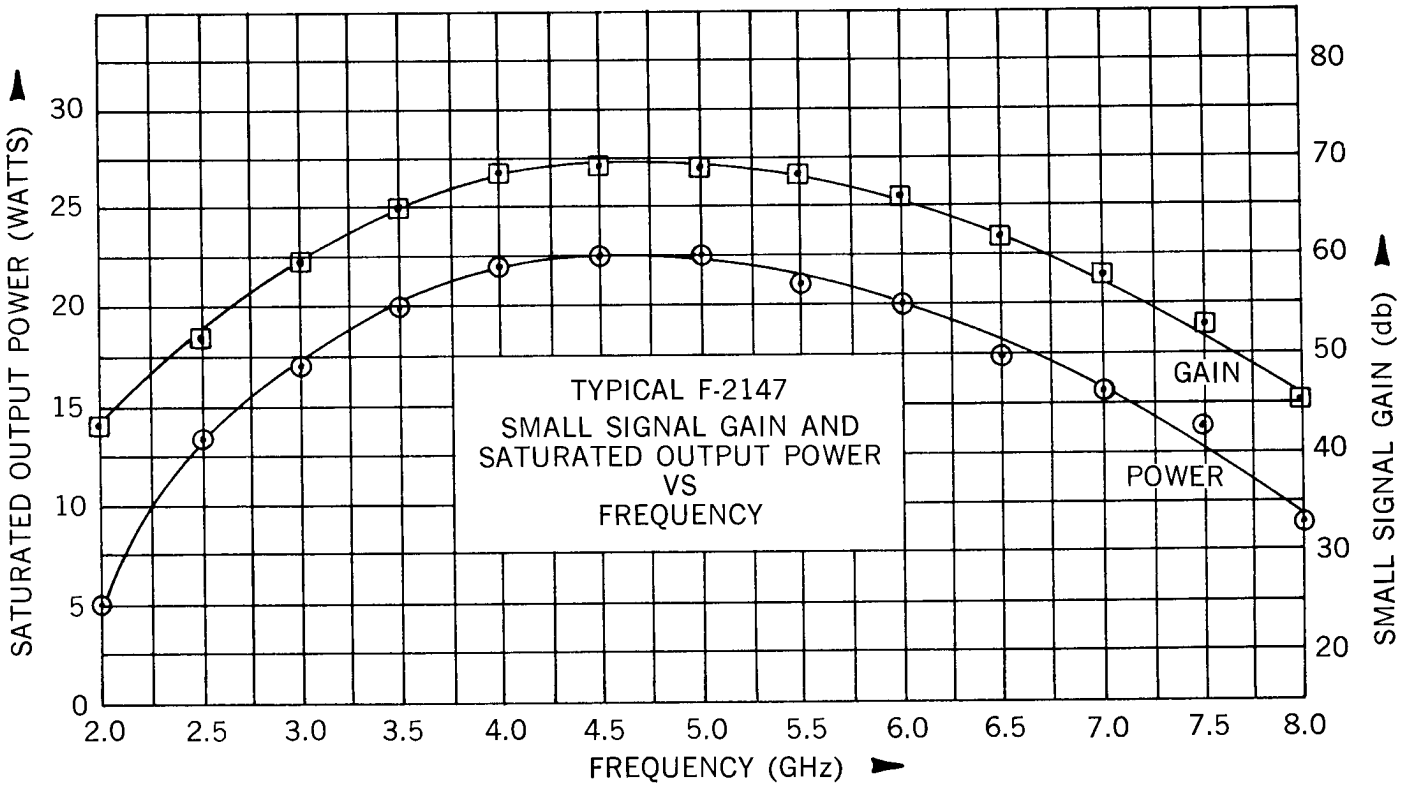
SATURATED OUTPUT POWER (WATTS)
SMALL SIGNAL GAIN (db)
FREQUENCY (GHz)
TYPICAL F-2147
SMALL SIGNAL GAIN AND
SATURATED OUTPUT POWER
VS
FREQUENCY
GAIN
POWER
0
5
10
15
20
25
30
20
30
40
50
60
70
80
2.0
2.5
3.0
3.5
4.0
4.5
5.0
5.5
6.0
6.5
7.0
7.5
8.0

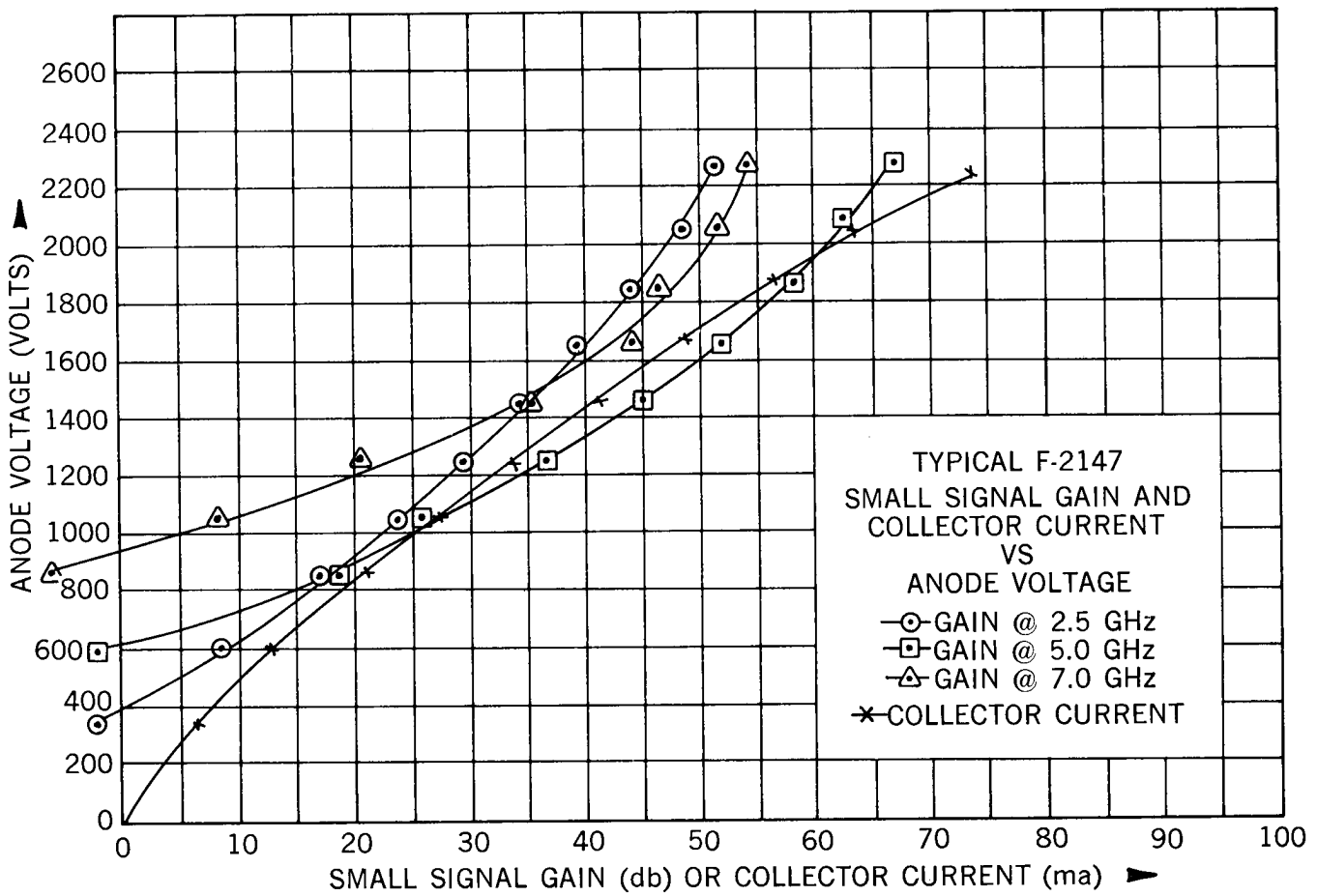
ANODE VOLTAGE (VOLTS)
SMALL SIGNAL GAIN (db) OR COLLECTOR CURRENT (ma)
TYPICAL F-2147
SMALL SIGNAL GAIN AND
COLLECTOR CURRENT
VS
ANODE VOLTAGE
GAIN @ 2.5 GHz
GAIN @ 5.0 GHz
GAIN @ 7.0 GHz
COLLECTOR CURRENT
0
200
400
600
800
1000
1200
1400
1600
1800
2000
2200
2400
2600
0
10
20
30
40
50
60
70
80
90
100

F-2147

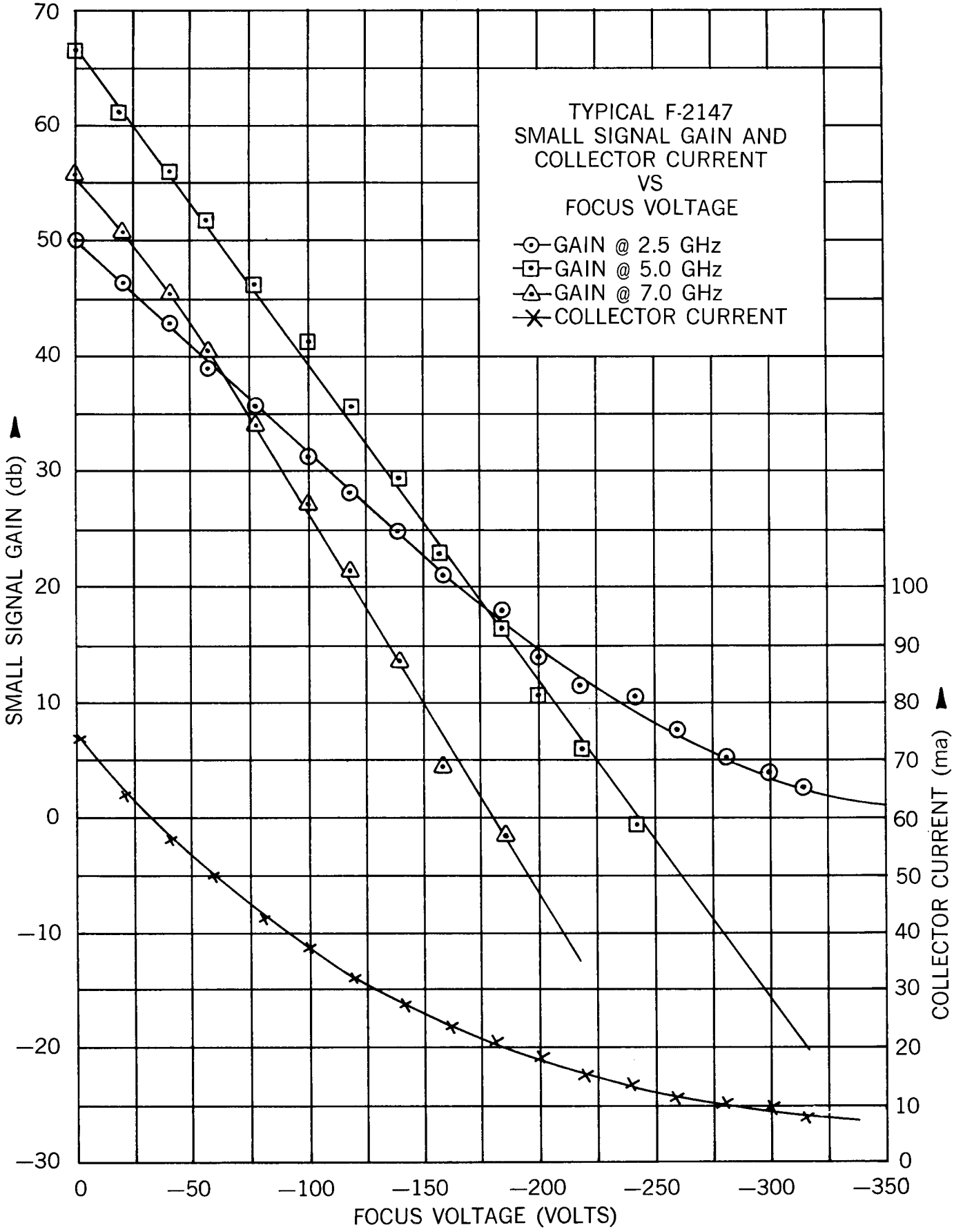

ELECTRON TUBE DIVISION ITT
Box 100, Easton, Pennsylvania 18042 Telephone (215) 252-7331

2/76

ELECTRON TUBE DEPARTMENT ■ COMPONENTS DIVISION
INTERNATIONAL TELEPHONE AND TELEGRAPH CORPORATION, CLIFTON, NEW JERSEY

F-2502 TRAVELING WAVE TUBE

TENTATIVE

DESCRIPTION:

The F-2502 is a cathode-pulsed traveling wave amplifier capable of providing 1000 watts peak output in the frequency band of 4000 - 8000 mc. The tube is of all-metal/ceramic structure and is contained in a periodic permanent magnet focusing mount. The fundamental parameters of this tube are listed below:

Frequency	2000 - 4000	mc
Power Output	1	kw min.
Gain (Power)	30	db. min.
Beam Voltage	8000	Volts
Cathode Current	1.5	Amperes max.
Pulse Width	50	usec. max.
Duty	.02	(.05 objective)
Heater Voltage	6.3	V
Heater Current	3.0	max.
Focusing		PPM
Weight	7	lbs.
Cooling		Forced Air
Overall Length	17	inches, approx.

Additional information for specific applications can be obtained from the

Electron Tube Applications Section
ITT Electron Tube Division
Post Office Box 104
Clifton, New Jersey

ITT ELECTRON TUBE DIVISION
CLIFTON, NEW JERSEY
INTERNATIONAL TELEPHONE AND TELEGRAPH CORPORATION

F-2507 BACKWARD WAVE OSCILLATOR

TENTATIVE

GENERAL

The F-2507 is a voltage-tunable, wide-band oscillator with a minimum output power of 100 milliwatts over its rated operating frequency range. This permanent magnet focused, highly stable device finds applications as a swept signal source in signal generators; master oscillator for frequency diversity transmitters; or typically as a local oscillator in radar or ECM receivers. The tube features a bifilar helix contained in a rugged envelope of simple mechanical design thus providing a highly reliable, compact unit. No cooling is required when the environment is below +60°C ambient temperature.

ELECTRICAL

	TYPICAL	ABSOLUTE	UNITS
Frequency	1.8 - 2.8	Note 1	Gcs
Power Output	110 - 190	100 min.	mw
Power Output Variation	3	4 max.	db
Fine Grain Variation, Note 2	± .8	+ 1 max.	db/100 mc
VSWR	2.5:1	3:1 max.	—
Output Impedance	50	50	Ohms
Heater Voltage	6.3	6.0 min/ 6.6 max.	Volts
Heater Current	0.96	1.2 max.	Amps
Anode Voltage (with respect to cathode)	95	250 max.	Volts
Anode Current	0.15	1.0 max.	Ma
Cathode Current	11.0	15.0 max.	Ma
Helix Voltage (with respect to cathode)	250 to 700	200 to 850	Volts
Helix Current	1.5	3.0 max.	Ma
Cathode Voltage	Zero (Ground)	Zero (Ground)	Volts

	TYPICAL	ABSOLUTE	UNITS
Grid Voltage for no Oscillation (RF Cutoff) (with respect to cathode)	-11	-30 max.	Volts
Collector Voltage (with respect to Helix)	+100	+150 max.	Volts
Capacitance, Cathode to All Electrodes	39	45 max.	$\mu\mu$fd.
Capacitance, Grid to all Electrodes	34	45 max.	$\mu\mu$fd.
Capacitance, Helix to all other Electrodes and Capsule	180	250 max.	$\mu\mu$fd.
Spurious Output Below Signal	50	40 min.	db.

NOTE 1 The F-2507 will operate over the frequency range of 1.782 to 2.828 Gcs. with a 3 db reduction in the rated minimum output power.

NOTE 2 This value is determined by selecting the 100 mc region of the frequency range which has the greatest differences in power output. The difference between these power levels is divided by two and the plus or minus sign is affixed to denote the difference from an average power level.

MECHANICAL

Package Length	9.90	9.95 max.	Inches
Package Diameter	3.00	3.02 max.	Inches
Package Weight	9 lbs. -14 oz.	10 max.	Pounds
Power Cable Length (to end of MS 3106B18-1P Plug)	12	11 min/13 max.	Inches
Output Cable Length (to end of Type "N" Connector)	15	14 min/16 max.	Inches

Additional information for specific applications can be obtained from the

Electron Tube Applications Section
ITT Electron Tube Division
Post Office Box 104
Clifton, New Jersey

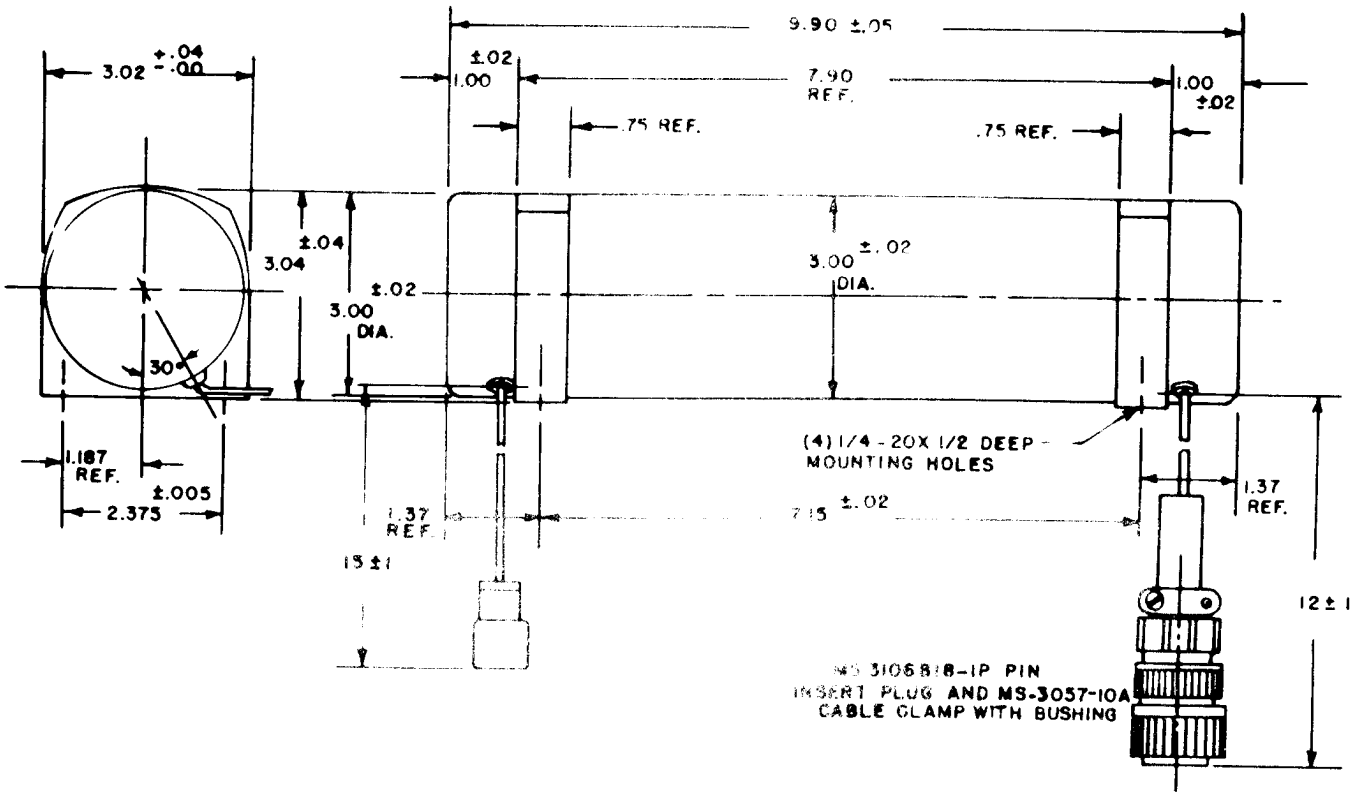
9.90 ±.05
3.02 +.04 -.00
±.02
1.00
7.90 REF.
1.00 ±.02
.75 REF.
.75 REF.
±.04
3.04
±.02
3.00 DIA.
3.00 ±.02 DIA.
30°
1.187 REF.
±.005
2.375
1.37 REF.
7.15 ±.02
1.37 REF.
15 ±1
12 ±1
(4) 1/4 - 20X 1/2 DEEP MOUNTING HOLES
MS 3106B-18-1P PIN INSERT PLUG AND MS-3057-10A CABLE CLAMP WITH BUSHING

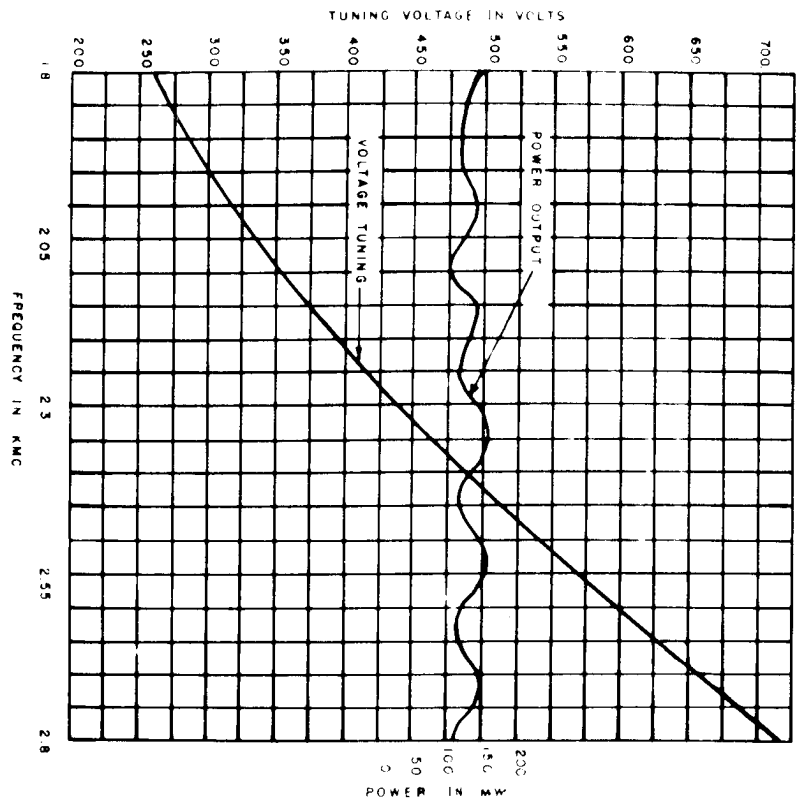
TUNING VOLTAGE IN VOLTS
200
250
300
350
400
450
500
550
600
650
700
VOLTAGE TUNING
POWER OUTPUT
FREQUENCY IN KMC
2.8
2.55
2.3
2.05
1.8
0
50
100
150
200
POWER IN MW

ITT ELECTRON TUBE DIVISION
CLIFTON, NEW JERSEY
INTERNATIONAL TELEPHONE AND TELEGRAPH CORPORATION

F-2508 BACKWARD WAVE OSCILLATOR

TENTATIVE

GENERAL

The F-2508 is a voltage-tunable, wide-band oscillator with a minimum output power of 100 milliwatts over its rated operating frequency range. This permanent magnet focused, highly stable device finds applications as a swept signal source in signal generators; master oscillator for frequency diversity transmitters; or typically as a local oscillator in radar or ECM receivers. The tube features a bifilar helix contained in a rugged envelope of simple mechanical design thus providing a highly reliable, compact unit. No cooling is required when the environment is below +60°C ambient temperature.

ELECTRICAL

	TYPICAL	ABSOLUTE	UNITS
Frequency	1.0 - 2.0	Note 1	Gcs
Power Output	100 - 800	100 min.	mw.
Power Output Variation	9	10 max.	db
Fine Grain Variation, Note 2	±1.5	±2.5 max.	db 100 mc
VSWR	2.5:1	3:1 max.	—
Output Impedance	50	50	Ohms
Heater Voltage	6.3	6.0 min/ 6.6 max.	Volts
Heater Current	.96	1.2 max.	Amps
Anode Voltage (with respect to Cathode)	+120	+ 250 max.	Volts
Anode Current	0.2	1.0 max.	Ma
Cathode Current	15	25 max.	Ma
*Helix Voltage	Zero	Zero	Volts
Helix Current	8.0	10.0 max.	Ma
*Cathode Voltage (with respect to Helix)	-250 to -1150	-200 to -1300	Volts

	TYPICAL	ABSOLUTE	UNITS
*Grid Voltage for no Oscillation (RF Cutoff) (with respect to Cathode)	-20	-30 max.	Volts
*Collector Voltage, with respect to Helix	+100	+150 max.	Volts
Capacitance, Cathode to all Electrodes	42	50 max.	$\mu\mu$fd.
Capacitance, Grid to all Electrodes	30	45 max.	$\mu\mu$fd.
Capacitance, Helix to all other Electrodes and Capsule	210	300 max.	$\mu\mu$fd.
Spurious Output below Signal	50	40 min.	db

*The above data shows tube operation with the helix at ground potential (Zero volts). If desired as an alternate, any one of the asterisked elements may be operated at ground potential provided the other electrode potentials are set at the appropriate relative levels.

NOTE 1 The F-2508 will operate over the frequency range of .99 to 2.02 Gcs. with a 3 db reduction in the rated minimum output power.

NOTE 2 This value is determined by selecting the 100 mc region of the frequency range which has the greatest difference in power output. The difference between these power levels is divided by two and the plus or minus sign is affixed to denote the difference from an average power level.

MECHANICAL

Package Length	11.40	11.45 max.	Inches
Package Diameter	3.25	3.27 max.	Inches
Package Weight	14 lbs. -4 oz.	14.5 max.	Pounds
Power Cable Length (to end of Winchester PM6P Connector)	12	11 min/13 max.	Inches
Output Cable Length (to end of Type "N" Connector)	15	14 min/16 max.	Inches

Additional information for specific applications can be obtained from the

Electron Tube Applications Section
ITT Electron Tube Division
Post Office Box 104
Clifton, New Jersey

TENTATIVE

PERMANENT – MAGNET BACKWARD-WAVE OSCILLATOR

F-2508

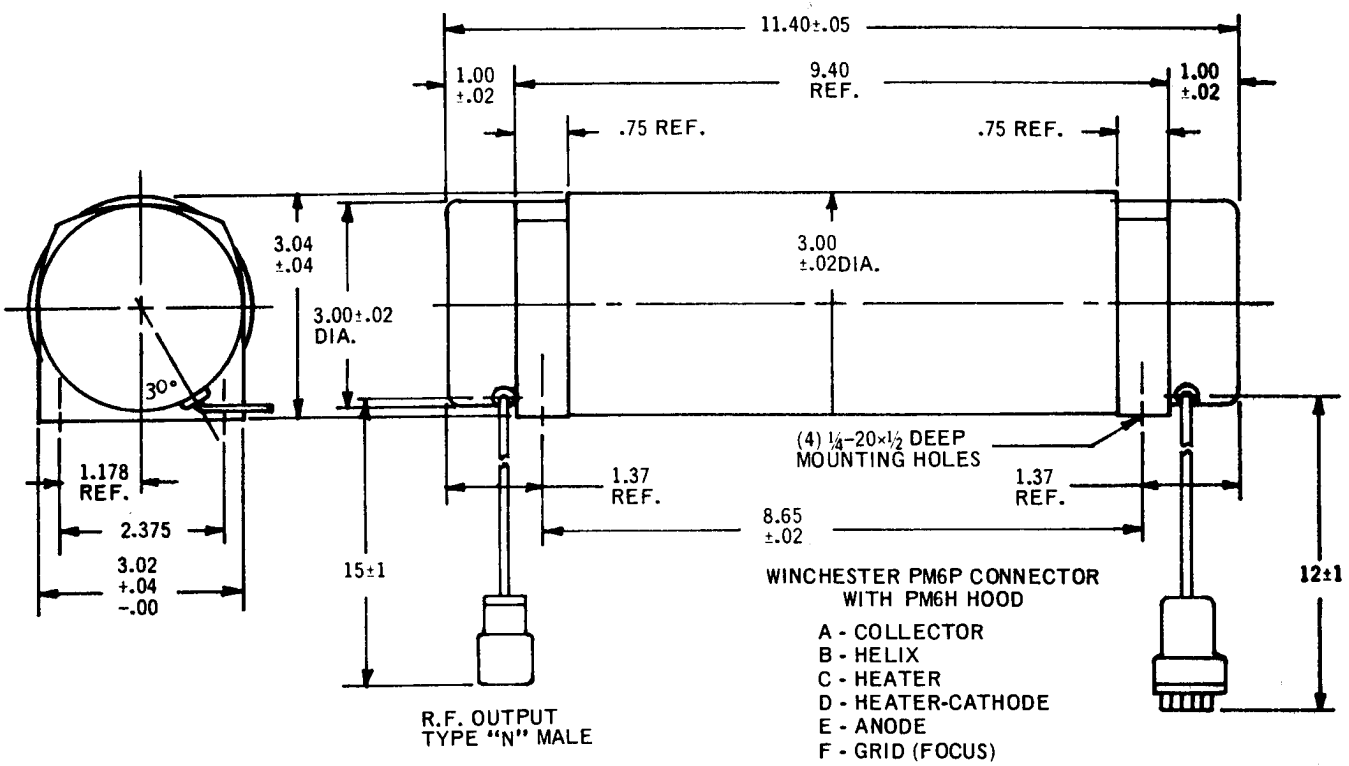

TYPICAL TUNING CURVE AND POWER OUTPUT
BWO TYPE F-2508

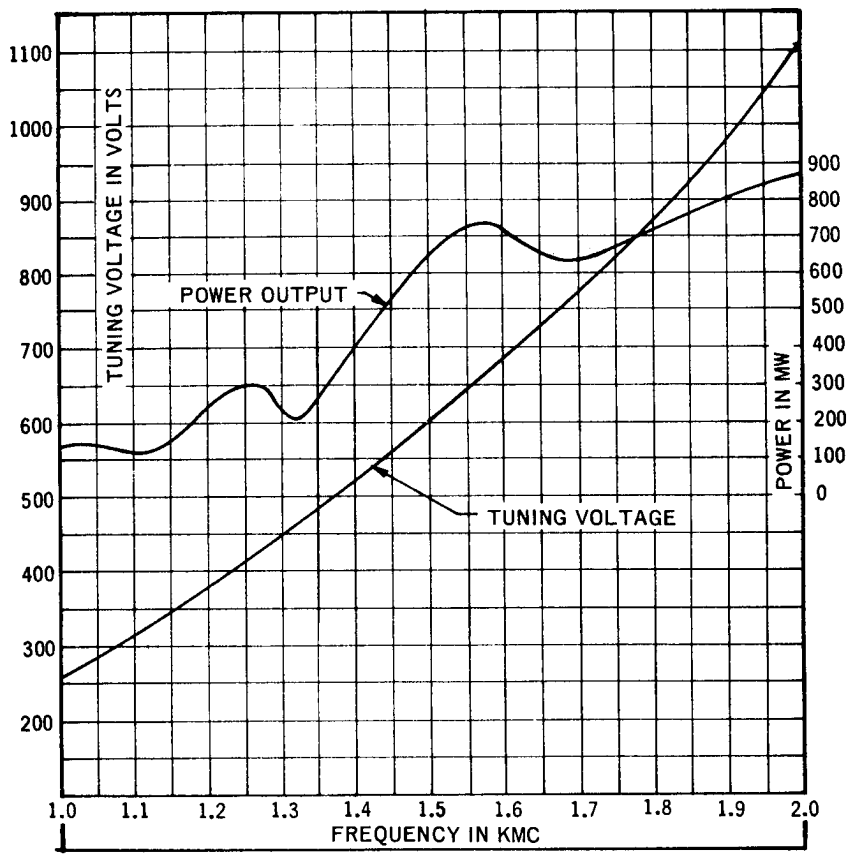

ITT ELECTRON TUBE DIVISION
CLIFTON, NEW JERSEY
INTERNATIONAL TELEPHONE AND TELEGRAPH CORPORATION

F-2509 BACKWARD WAVE OSCILLATOR

TENTATIVE

GENERAL

The F-2509 is a voltage-tunable, wide-band oscillator with a minimum output power of 100 milliwatts over its rated operating frequency range. This permanent magnet focused, highly stable device finds applications as a swept signal source in signal generators; master oscillator for frequency diversity transmitters; or typically as a local oscillator in radar or ECM receivers. The tube features a bifilar helix contained in a rugged envelope of simple mechanical design thus providing a highly reliable, compact unit. No cooling is required when the environment is below +60°C ambient temperature.

ELECTRICAL

	TYPICAL	ABSOLUTE	UNITS
Frequency	2.0 - 4.0	Note 1	Gcs
Power Output	100 - 250	100 min.	mw
Power Output Variation	5	6 max.	db
Fine Grain Variation, Note 2	±1.0	±1.5 max.	db/200 mc
VSWR	2.0:1	2.5:1	—
Output Impedance	50	50	Ohms
Heater Voltage	6.3	6.0 min./6.6 max.	Volts
Heater Current	.96	1.2 max.	Amps
Anode Voltage (with respect to Cathode)	106	250 max.	Volts
Anode Current	0.15	1.0 max.	Ma
Cathode Current	10.4	15 max.	Ma
*Helix Voltage	Zero	Zero	Volts
Helix Current	1.9	3.0 max.	Ma
*Cathode Voltage (with respect to Helix)	-300 to -1800	-200 to -2100	Volts

	TYPICAL	ABSOLUTE	UNITS
*Grid Voltage for no Oscillation (RF Cutoff) (with respect to Cathode)	-11	-30 max.	Volts
*Collector Voltage (with respect to Helix)	+100	+150 max.	Volts
Capacitance, Cathode to all Electrodes	42	50 max.	$\mu\mu$fd.
Capacitance, Grid to all Electrodes	30	45 max.	$\mu\mu$fd.
Capacitance, Helix to all other Electrodes and Capsule	210	300 max.	$\mu\mu$fd.
Spurious Output below Signal	50	40 min.	db

*The above data shows tube operation with the helix at ground potential (Zero volts). If desired as an alternate, any one of the asterisked elements may be operated at ground potential provided the other electrode potentials are set at the appropriate relative levels.

NOTE 1 The F-2509 will operate over the frequency range of 1.98 to 4.04 Gcs. with a 3 db reduction in the rated minimum output power.

NOTE 2 This value is determined by selecting the 200 mc region of the frequency range which has the greatest differences in power output. The difference between these power levels is divided by two and the plus or minus sign is affixed to denote the difference from an average power level.

MECHANICAL

Package Length	11.40	11.45 max.	Inches
Package Diameter	3.00	3.02 max.	Inches
Package Weight	14 lbs-4 oz.	14.5 max.	Pounds
Power Cable Length (to end of Winchester PM6P Connector)	12	11 min/13 max.	Inches
Output Cable Length (to end of Type "N" Connector)	15	14 min/16 max.	Inches

Additional information for specific applications can be obtained from the

Electron Tube Applications Section
ITT Electron Tube Division
Post Office Box 104
Clifton, New Jersey

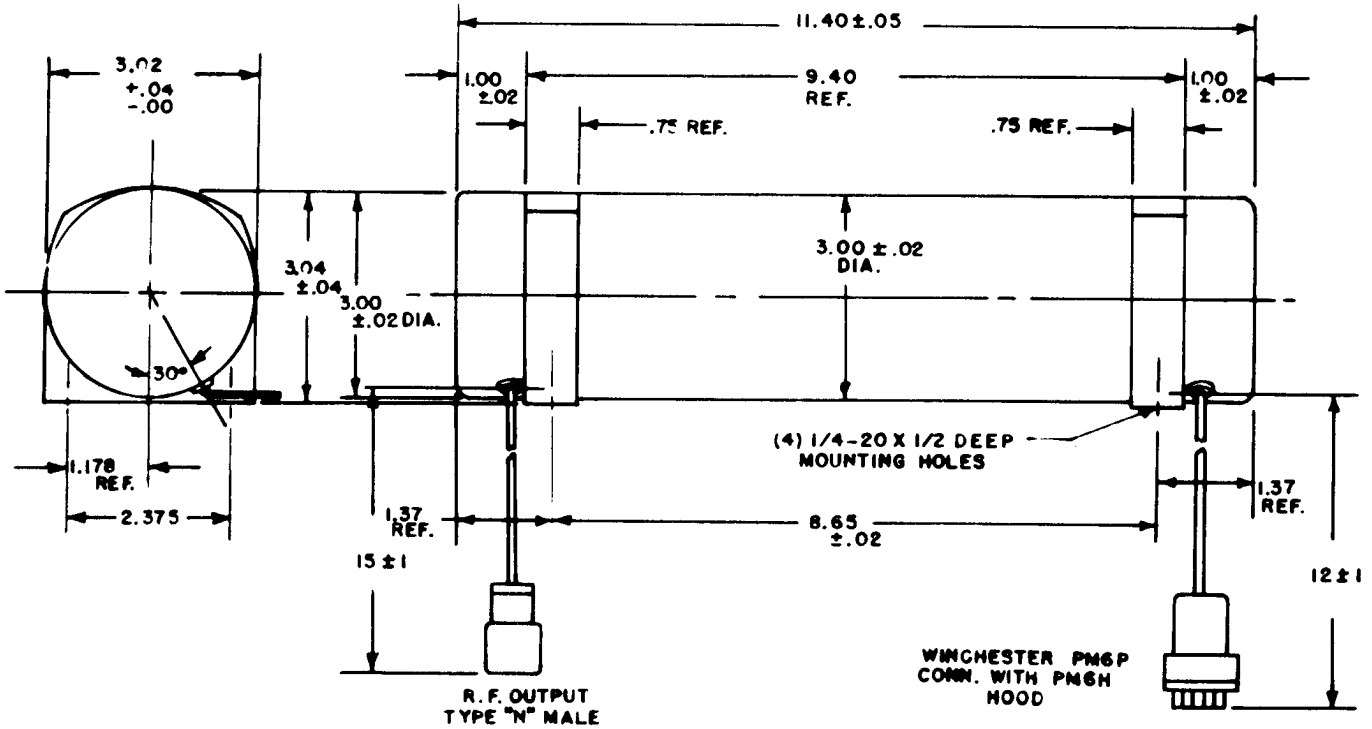
11.40±.05
3.02
+.04
-.00
1.00
±.02
9.40
REF.
1.00
±.02
.75 REF.
.75 REF.
3.04
±.04
3.00
±.02 DIA.
3.00 ± .02
DIA.
30°
(4) 1/4-20 X 1/2 DEEP
MOUNTING HOLES
1.178
REF.
2.375
1.37
REF.
8.65
±.02
1.37
REF.
15 ± 1
12 ± 1
R.F. OUTPUT
TYPE "N" MALE
WINCHESTER PM6P
CONN. WITH PM6H
HOOD

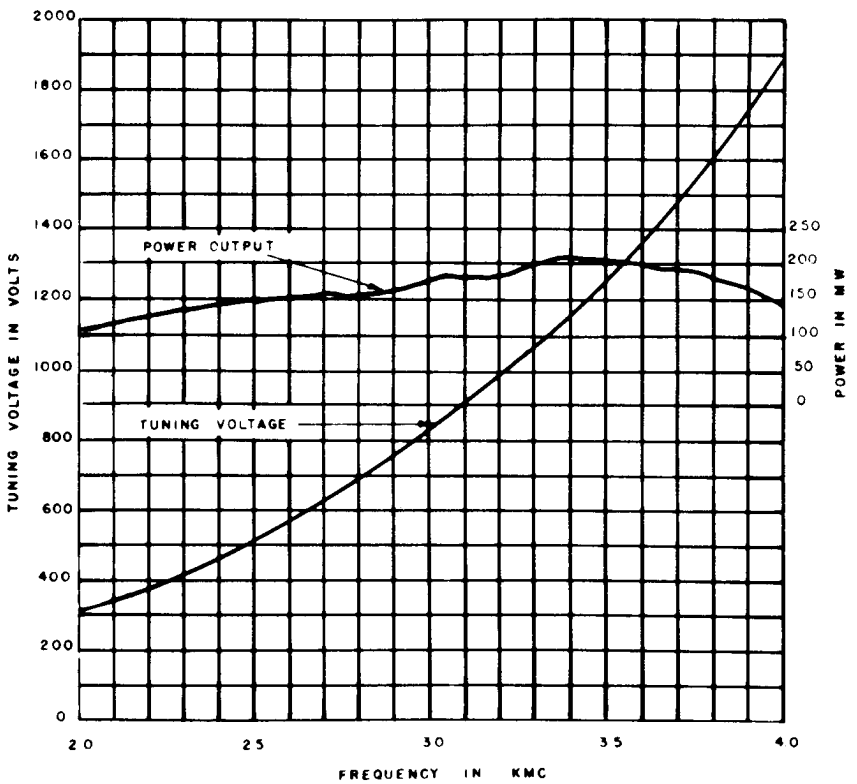
2000
1800
1600
1400
1200
1000
800
600
400
200
0
TUNING VOLTAGE IN VOLTS
POWER OUTPUT
TUNING VOLTAGE
250
200
150
100
50
0
POWER IN MW
20
25
30
35
40
FREQUENCY IN KMC

ITT ELECTRON TUBE DIVISION
CLIFTON, NEW JERSEY
INTERNATIONAL TELEPHONE AND TELEGRAPH CORPORATION

F-2510 BACKWARD WAVE OSCILLATOR

TENTATIVE

GENERAL

The F-2510 is a voltage-tunable, wide-band oscillator with a minimum output power of 25 milliwatts over its rated operating frequency range. This permanent magnet focused, highly stable device finds applications as a swept signal source in signal generators; master oscillator for frequency diversity transmitters; or typically as a local oscillator in radar or ECM receivers. The tube features a unifilar helix contained in a rugged envelope of simple mechanical design thus providing a highly reliable, compact unit. No cooling is required when the environment is below +60°C ambient temperature.

ELECTRICAL

	TYPICAL	ABSOLUTE	UNITS
Frequency	4.0 - 8.2	Note 1	Gcs
Power Output	25 - 175	25 min.	mw
Power Output Variation	8	10 max.	db
Fine Grain Variation, Note 2	±1.5	±2 max.	db/420 mc
VSWR	2.5:1	3:1 max.	—
Output Impedance	50	50	Ohms
Heater Voltage	6.3	6.0 min./ 6.6 max.	Volts
Heater Current	.96	1.2 max.	Amps
Anode Voltage (with respect to Cathode)	150	250 max.	Volts
Anode Current	0.3	1.0 max.	Ma
Cathode Current	12	15 max.	Ma
*Helix Voltage	Zero	Zero	Volts

	TYPICAL	ABSOLUTE	UNITS
Helix Current	3.5	6.0 max.	Ma
*Cathode Voltage (with respect to Helix)	-250 to -2400	-200 to -2500	Volts
*Grid Voltage for no Oscillation (RF Cutoff) (with respect to Cathode)	-13	-30 max.	Volts
*Collector Voltage (with respect to Helix)	+100	+150 max.	Volts
Capacitance, Cathode to all Electrodes	39	50 max.	μμfd.
Capacitance, Grid to all Electrodes	32	45 max.	μμfd.
Capacitance, Helix to all other Electrodes and Capsule	150	200 max.	μμfd.
Spurious Output below Signal	50	40 min.	db

*The above data shows tube operation with the helix at ground potential (Zero volts). If desired as an alternate, any one of the asterisked elements may be operated at ground potential provided the other electrode potentials are set at the appropriate relative levels.

NOTE 1 The F-2510 will operate over the frequency range of 3.96 to 8.282 Gcs with a 3 db reduction in the rated minimum output power.

NOTE 2 This value is determined by selecting the 420 mc region of the frequency range which has the greatest differences in power output. The difference between these power levels is divided by two and the plus or minus sign is affixed to denote the difference from an average power level.

MECHANICAL

Package Length	9.90	9.95 max.	Inches
Package Diameter	3.00	3.02 max.	Inches
Package Weight	9 lbs - 14 oz.	10 max.	Pounds
Power Cable Length (to end of Winchester PM6P Connector)	12	11 min./13 max.	Inches
Output Cable Length (to end of Type "N" Connector)	15	14 min./16 max.	Inches

Additional information for specific applications can be obtained from the

Electron Tube Applications Section
ITT Electron Tube Division
Post Office Box 104
Clifton, New Jersey

F-2510

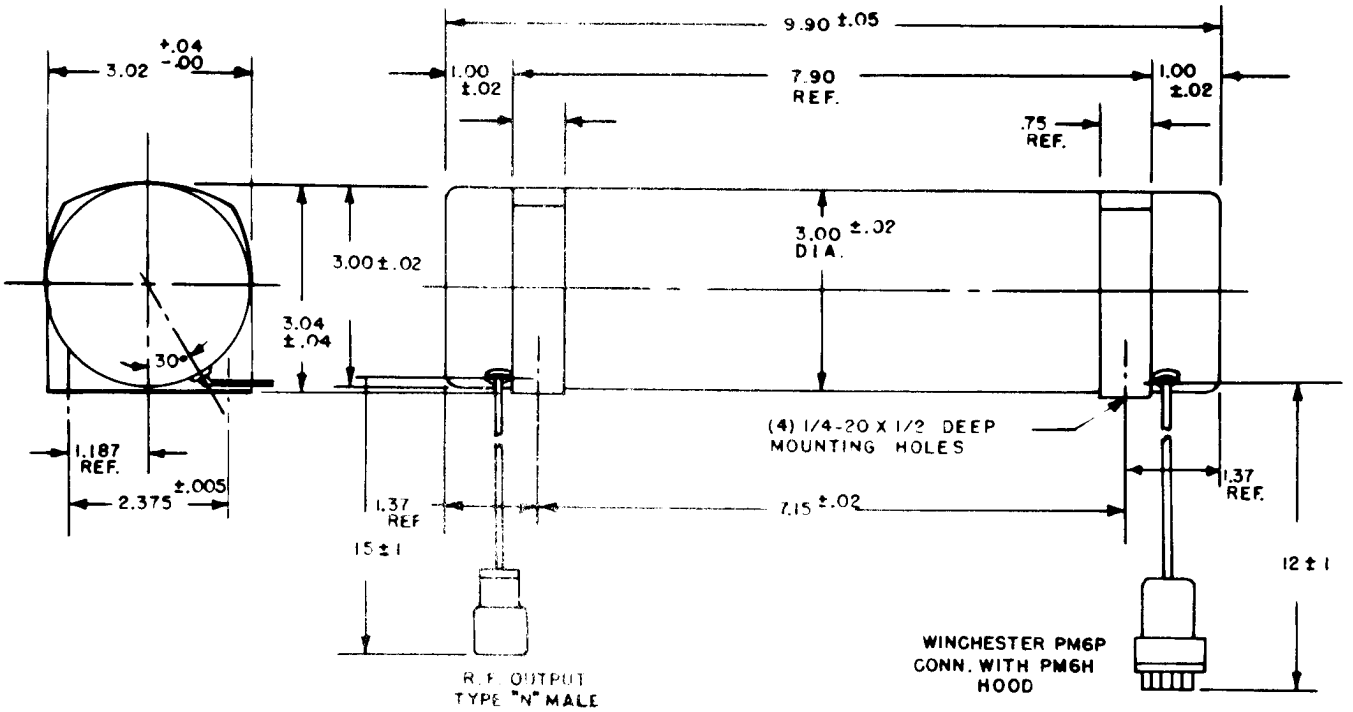
9.90 ±.05
3.02 +.04 -.00
1.00 ±.02
7.90 REF.
1.00 ±.02
.75 REF.
3.00 ±.02
3.00 ±.02 DIA.
3.04 ±.04
30°
(4) 1/4-20 X 1/2 DEEP MOUNTING HOLES
1.187 REF.
2.375 ±.005
1.37 REF
7.15 ±.02
1.37 REF.
15 ± 1
12 ± 1
R.F. OUTPUT TYPE "N" MALE
WINCHESTER PM6P CONN. WITH PM6H HOOD

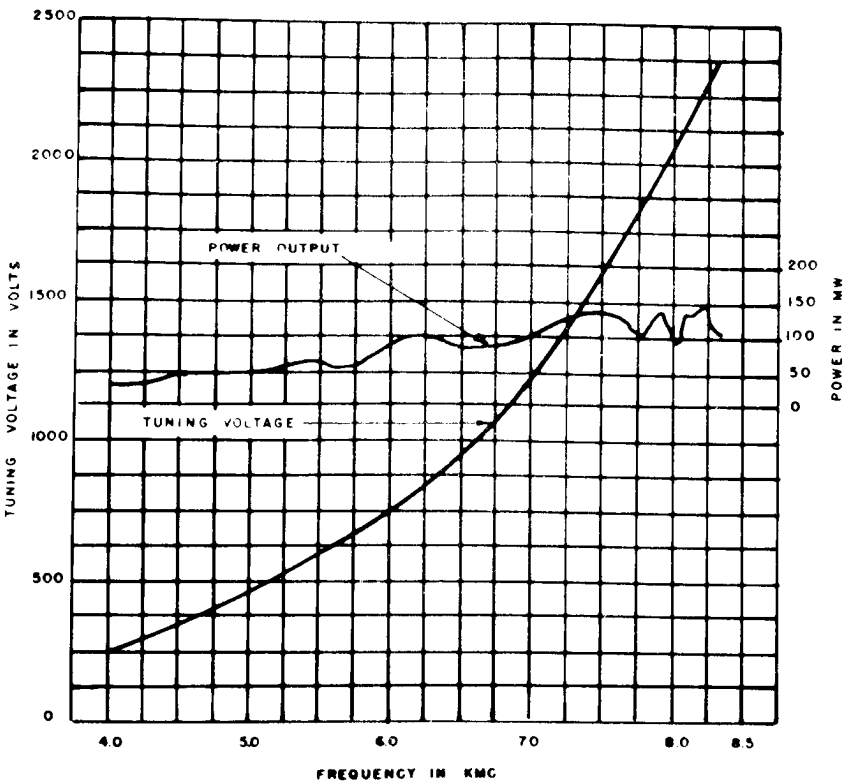
2500
2000
1500
1000
500
0
TUNING VOLTAGE IN VOLTS
POWER OUTPUT
TUNING VOLTAGE
200
150
100
50
0
POWER IN MW
4.0
5.0
6.0
7.0
8.0
8.5
FREQUENCY IN KMC

ELECTRON TUBE DIVISION
CLIFTON, NEW JERSEY
INTERNATIONAL TELEPHONE AND TELEGRAPH CORPORATION

F-2511 BACKWARD WAVE OSCILLATOR

TENTATIVE

GENERAL

The F-2511 is a voltage-tunable, wide-band oscillator with a minimum output power of 25 milliwatts over its rated operating frequency range. This permanent magnet focused, highly stable device finds applications as a swept signal source in signal generators; master oscillator for frequency diversity transmitters; or typically as a local oscillator in radar or ECM receivers. The tube features a unifilar helix contained in a rugged envelope of simple mechanical design thus providing a highly reliable, compact unit. No cooling is required when the environment is below +60°C ambient temperature.

ELECTRICAL

	TYPICAL	ABSOLUTE	UNITS
Frequency	8.0 - 12.4	Note 1	Gcs
Power Output	25 - 130	25 min.	mw
Power Output Variation	8	9 max.	db
Fine Grain Variation, Note 2	±1.5	±2 max.	db 440 mc
VSWR	2.5:1	3:1 max.	—
Output Impedance	50	50	Ohms
Heater Voltage	6.3	6.0 min. 6.6 max.	Volts
Heater Current	.96	1.2 max.	Amps
Anode Voltage (with respect to Cathode)	150	250 max.	Volts
Anode Current	0.5	1.0 max.	Ma
Cathode Current	10.0	15 max.	Ma
*Helix Voltage	Zero	Zero	Volts
Helix Current	4.0	6.0 max.	Ma
*Cathode Voltage (with respect to Helix)	-550 to -2400	-450 to -2500	Volts

	TYPICAL	ABSOLUTE	UNITS
*Grid Voltage for no Oscillation (RF Cutoff) (with respect to Cathode)	-15	-30 max.	Volts
*Collector Voltage (with respect to Helix)	+100	+150 max.	Volts
Capacitance, Cathode to all Electrodes	40	50 max.	$\mu\mu$fd.
Capacitance, Grid to all Electrodes	29	45 max.	$\mu\mu$fd.
Capacitance, Helix to all other Electrodes and Capsule	80	150 max.	$\mu\mu$fd.
Spurious Output below Signal	50	40 min.	db

*The above data shows tube operation with helix at ground potential (Zero Volts). If desired as an alternate, any one of the asterisked elements may be operated at ground potential, provided the other electrode potentials are set at the appropriate relative levels.

NOTE 1 The F-2511 will operate over the frequency range of 7.92 to 12.524 Gcs. with a 3 db reduction in the rated minimum output power.

NOTE 2 This value is determined by selecting the 440 mc region of the frequency range which has the greatest differences in power output. The difference between these power levels is divided by two and the plus or minus sign is affixed to denote the difference from an average power level.

MECHANICAL

Package Length	9.9	9.95 max.	Inches
Package Diameter	3.0	3.02 max.	Inches
Package Weight	9 lbs. -14 oz.	10 max.	Pounds
Power Cable Length (to end of Winchester PM6P Connector)	12	11 min./13 max.	Inches
Output Cable Length (to end of Type "N" Connector)	15	14 min./16 max.	Inches

Additional information for specific applications can be obtained from the

Electron Tube Applications Section
ITT Electron Tube Division
Post Office Box 104
Clifton, New Jersey

F-2511

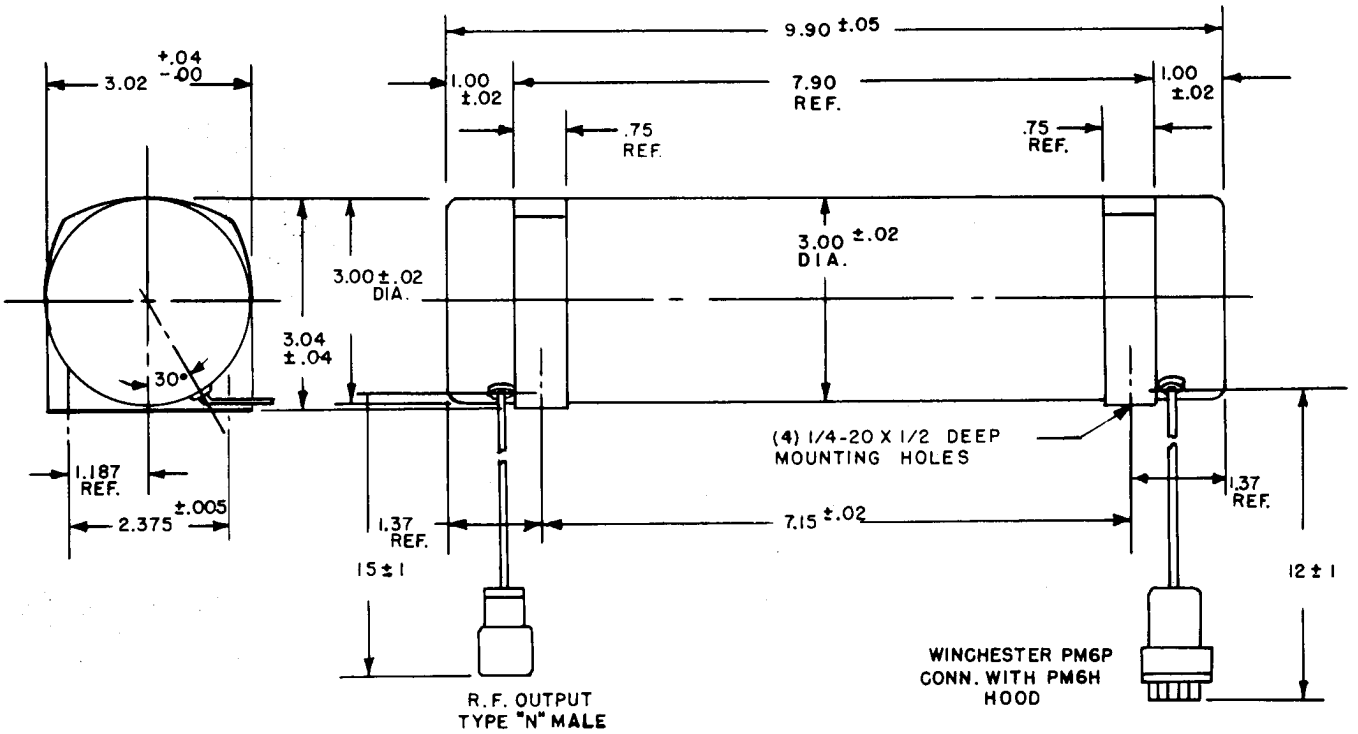

A-COLLECTOR
B-HELIX
C-HEATER
D-HEATER, CATHODE
E-ANODE
F-GRID (FOCUS)

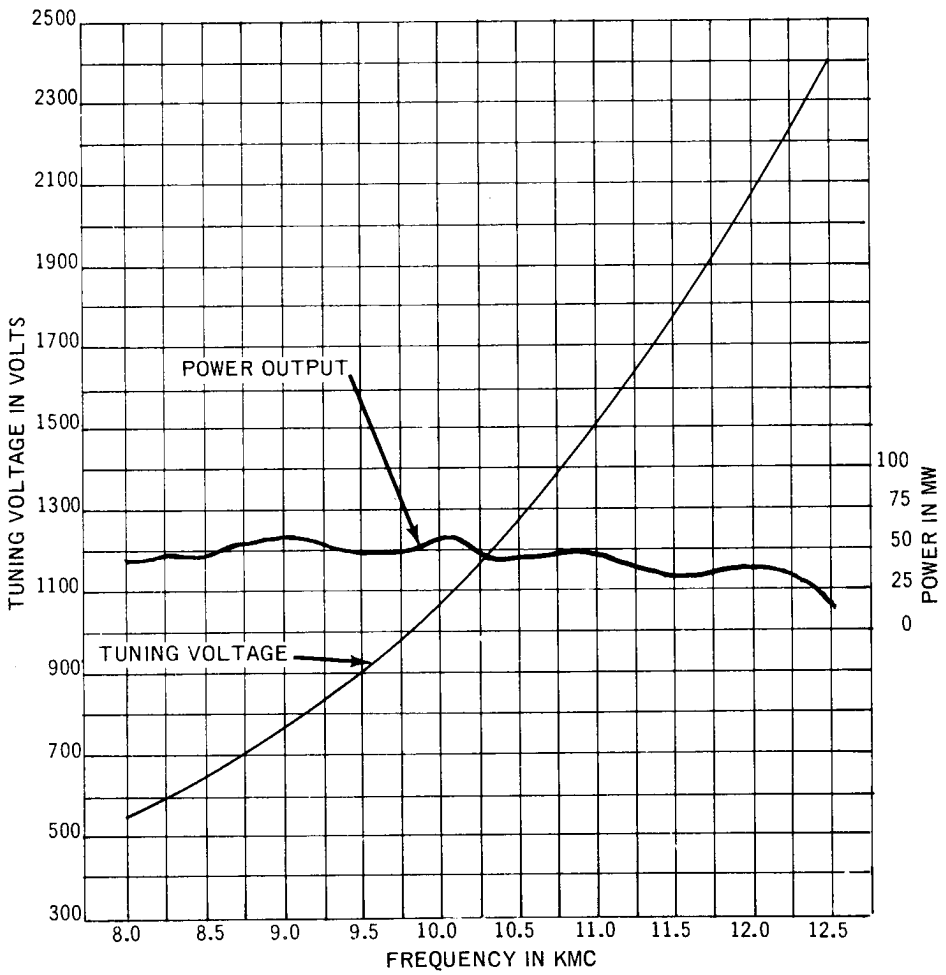

ELECTRON TUBE DIVISION
CLIFTON, NEW JERSEY
INTERNATIONAL TELEPHONE AND TELEGRAPH CORPORATION

F-2513 BACKWARD WAVE OSCILLATOR

TENTATIVE

GENERAL

The F-2513 is a voltage-tunable, wide-band oscillator with a minimum output power of 25 milliwatts over its rated operating frequency range. This permanent magnet focused, highly stable device finds applications as a swept signal source in signal generators; master oscillator for frequency diversity transmitters; or typically as a local oscillator in radar or ECM receivers. The tube features a bifilar helix contained in a rugged envelope of simple mechanical design thus providing a highly reliable, compact unit. No cooling is required when the environment is below +60°C ambient temperature.

ELECTRICAL

	TYPICAL	ABSOLUTE	UNITS
Frequency	1.0 - 4.0	Note 1	Gcs
Power Output	25 - 150	25 min.	mw
Power Output Variation	11	15 max.	db
Fine Grain Variation, Note 2	±3	±3 max.	db/300 mc
VSWR	2.5:1	3:1 max.	—
Output Impedance	50	50	Ohms
Heater Voltage	6.3	6.0 min./ 6.6 max.	Volts
Heater Current	.96	1.2 max.	Amps
Anode Voltage (with respect to Cathode)	95	250 max.	Volts
Anode Current	.15	1.0 max.	Ma
Cathode Current	12	20 max.	Ma
*Helix Voltage	Zero	Zero	Volts
Helix Current	5	8 max.	Ma
*Cathode Voltage (with respect to Helix)	-100 to -2400	-90 to -2500	Volts

	TYPICAL	ABSOLUTE	UNITS
*Grid Voltage for no Oscillation (RF Cutoff) (with respect to Cathode)	-11	-20 max.	Volts
*Collector Voltage (with respect to Helix)	+100	+150 max.	Volts
Capacitance, Cathode to all Electrodes	42	50 max.	$\mu\mu$fd.
Capacitance, Grid to all Electrodes	30	45 max.	$\mu\mu$fd.
Capacitance, Helix to all other Electrodes and Capsule	220	300 max.	$\mu\mu$fd.
Spurious Output below Signal	50	40 min.	db

*The above data shows tube operation with helix at ground potential (Zero Volts). If desired as an alternate, any one of the asterisked elements may be operated at ground potential, provided the other electrode potentials are set at the appropriate relative levels.

NOTE 1 The F-2513 will operate over the frequency range of .99 to 4.04 Gcs. with a 3 db reduction in the rated minimum output power.

NOTE 2 This value is determined by selecting the 300 mc region of the frequency range which has the greatest differences in power output. The difference between these power levels is divided by two and the plus or minus sign is affixed to denote the difference from an average power level.

MECHANICAL

Package Length	11.40	11.45 max.	Inches
Package Diameter	3.00	3.02 max.	Inches
Package Weight	14 lbs. -4 oz.	14.5 max.	Pounds
Power Cable Length (to end of Winchester PM6P Connector)	12	11 min./13 max.	Inches
Output Cable Length (to end of Type "N" Connector)	15	14 min./16 max.	Inches

Additional information for specific applications can be obtained from the

Electron Tube Applications Section
ITT Electron Tube Division
Post Office Box 104
Clifton, New Jersey

F-2513

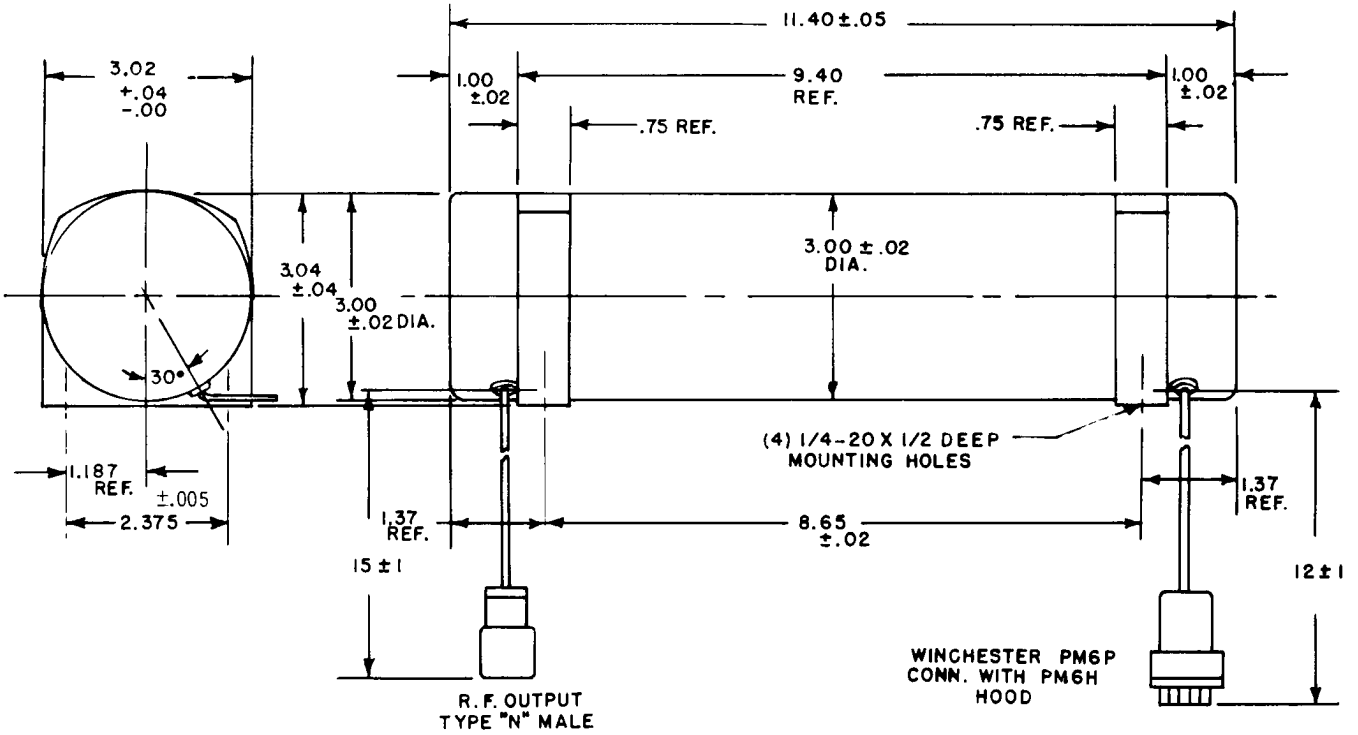

A-COLLECTOR
B-HELIX
C-HEATER
D-HEATER-CATHODE
E-ANODE
F-GRID (FOCUS)

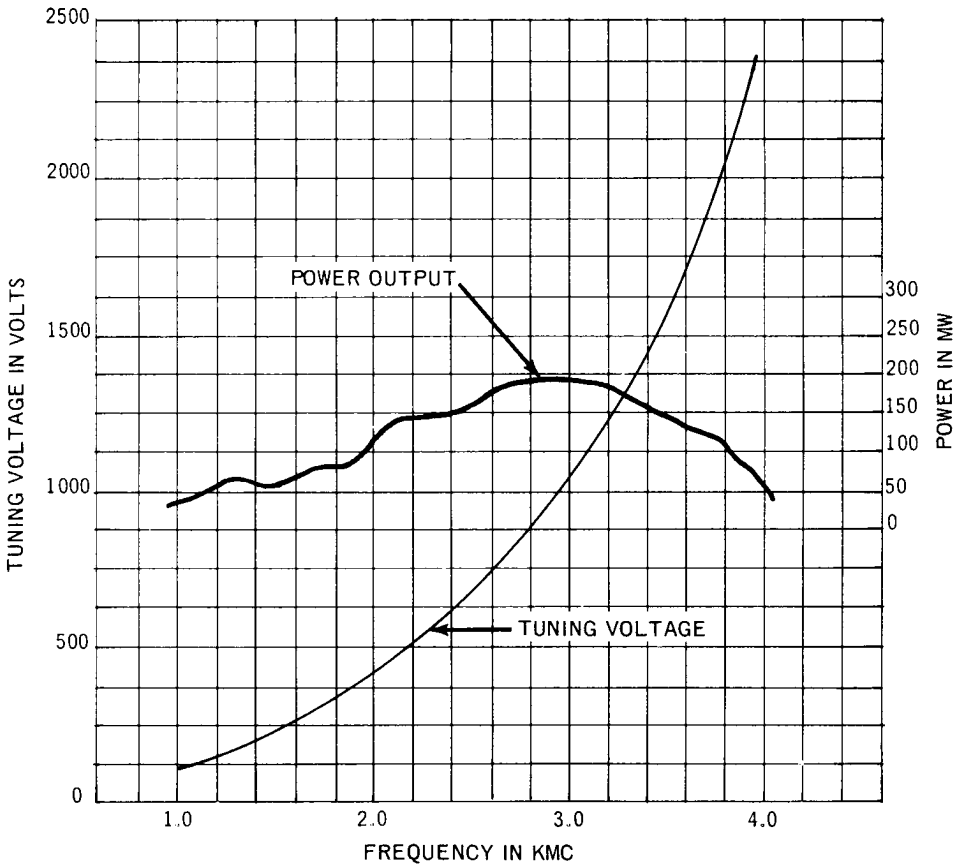

ITT ELECTRON TUBE DIVISION
CLIFTON, NEW JERSEY
INTERNATIONAL TELEPHONE AND TELEGRAPH CORPORATION

F-2516 BACKWARD WAVE OSCILLATOR

TENTATIVE

GENERAL

The F-2516 is a voltage-tunable, wide-band oscillator with a minimum output power of 20 milliwatts over its rated operating frequency range. This permanent magnet focused, highly stable device finds applications as a swept signal source in signal generators; master oscillators for frequency diversity transmitters; or typically as a local oscillator in radar or ECM receivers. The tube features a bifilar helix contained in a rugged envelope of simple mechanical design thus providing a highly reliable, compact unit. No cooling is required when the environment is below +60°C ambient temperature.

ELECTRICAL

	TYPICAL	ABSOLUTE	UNITS
Frequency	5.3 - 10.3	Note 1	Gcs
Power Output	25 - 200	20 min.	mw
Power Output Variation	9	10 max.	db
Fine Grain Variation, Note 2	±2	±2.5	db/500 mc
VSWR	2.5:1	3.5:1	—
Output Impedance	50	50	Ohms
Heater Voltage	6.3	6.0 min./ 6.6 max.	Volts
Heater Current	0.96	1.2 max.	Amps
Anode Voltage (with respect to Cathode)	200	250 max.	Volts
Anode Current	.25	1.0 max.	Ma
Cathode Current	10	15 max.	Ma
*Helix Voltage	Zero	Zero	Volts
Helix Current	4.0	6.0	Ma
*Cathode Voltage (with respect to Helix)	-245 to -2400	-200 to -2500	Volts

	TYPICAL	ABSOLUTE	UNITS
*Grid Voltage for no Oscillation (RF Cutoff) (with respect to cathode)	-20	-30 max.	Volts
*Collector Voltage (with respect to Helix)	+100	+150 max.	Vdc
Capacitance, Cathode to all Electrodes	40	50 max.	$\mu\mu$fd.
Capacitance, Grid to all Electrodes	30	45 max.	$\mu\mu$fd.
Capacitance, Helex to all other Electrodes and Capsule	120	200 max.	$\mu\mu$fd.
Spurious Output below Signal	50	40 min.	db.

*The above data shows tube operation with helix at ground potential (Zero Volts). If desired as an alternate, any one of the asterisked elements may be operated at ground potential, provided the other electrode potentials are set at the appropriate relative levels.

NOTE 1 The F-2516 will operate over the frequency range of 5.247 to 10.4 Gcs. with a 3 db reduction in rated minimum output power.

NOTE 2 This value is determined by selecting the 500 mc region of the frequency range which has the greatest difference in power output. The difference between these power levels is divided by two and the plus or minus sign affixed to denote the difference from an average power level.

MECHANICAL

Package Length	9.90	9.95 max.	Inches
Package Diameter	3.00	3.02 max.	Inches
Package Weight	9 lbs. -14 oz.	10 max.	Pounds
Power Cable Length (to end of Winchester PM6P Connector)	12	11 min./13 max.	Inches
Output Cable Length (to end of Type "N" Connector)	15	14 min./16 max.	Inches

Additional information for specific applications can be obtained from the

Electron Tube Applications Section
ITT Electron Tube Division
Post Office Box 104
Clifton, New Jersey

F-2516

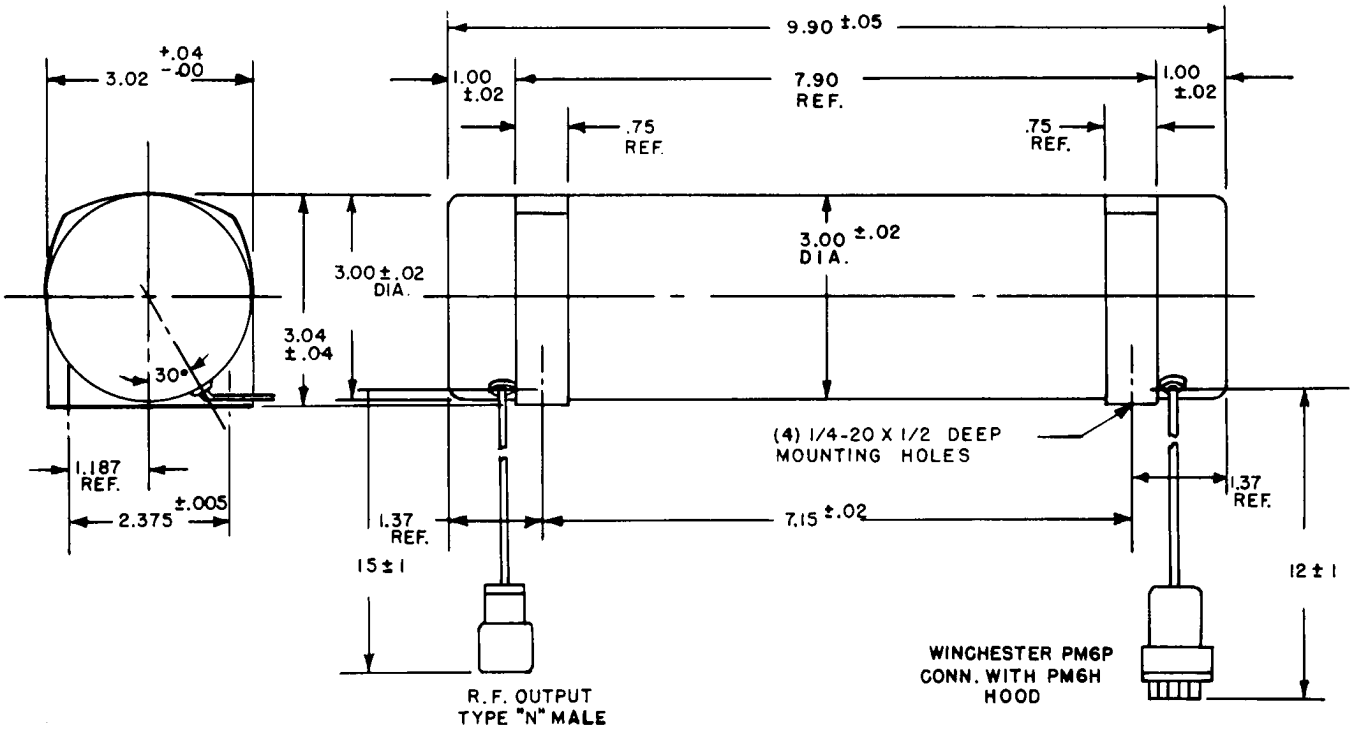

A-COLLECTOR
B-HELIX
C-HEATER
D-HEATER, CATHODE
E-ANODE
F-GRID (FOCUS)

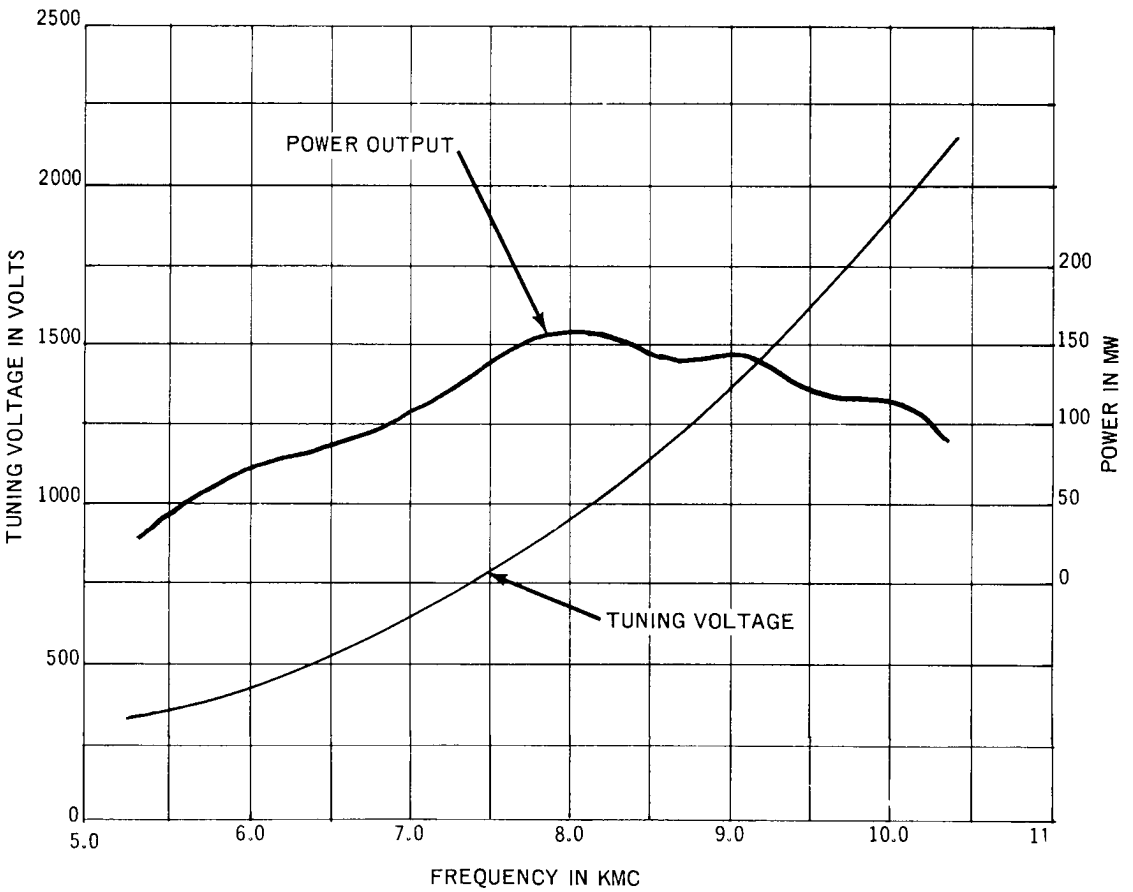

ITT ELECTRON TUBE DIVISION
CLIFTON, NEW JERSEY
INTERNATIONAL TELEPHONE AND TELEGRAPH CORPORATION

F-2517 BACKWARD WAVE OSCILLATOR

TENTATIVE

GENERAL

The F-2517 is a voltage-tunable, wide-band oscillator with a minimum output power of 50 milliwatts over its rated operating frequency range. This permanent magnet focused, highly stable device finds applications as a swept signal source in signal generators; master oscillator for frequency diversity transmitters; or typically as a local oscillator in radar or ECM receivers. The tube features a bifilar helix contained in a rugged envelope of simple mechanical design thus providing a highly reliable, compact unit. No cooling is required when the environment is below +60°C ambient temperature.

ELECTRICAL

	TYPICAL	ABSOLUTE	UNITS
Frequency	3.7 - 5.5	Note 1	Gcs
Power Output	50 - 250	50 min.	mw
Power Output Variation	7	8 max.	db
Fine Grain Variation, Note 2	±1.5	±2 max.	db 180 mc
VSWR	2.5:1	3:1 max.	—
Output Impedance	50	50	Ohms
Heater Voltage	6.3	6.0 min./ 6.6 max.	Volts
Heater Current	.98	1.20 max.	Amps
Anode Voltage	130	250 max.	Volts
Anode Current (with respect to Cathode)	.25	1.0 max.	Ma
Cathode Current	15.0	20 max.	Ma
Helix Voltage (with respect to Cathode	300 to 960	200 to 1100	Volts
Helix Current	1.5	3.0 max.	Ma
Cathode Voltage	Zero (ground)	Zero (ground)	Volts

	TYPICAL	ABSOLUTE	UNITS
Grid Voltage for no Oscillation (RF Cutoff) (with respect to Cathode)	-11	-30 max.	Volts
Collector Voltage (with respect to Helix)	+100	+150 max.	Volts
Capacitance, Cathode to all Electrodes	42	50 max.	$\mu\mu$fd.
Capacitance, Grid to all Electrodes	30	45 max.	$\mu\mu$fd.
Capacitance, Helix to all other Electrodes and Capsule	210	300 max.	$\mu\mu$fd.
Spurious Output below Signal	30	40 min.	db

NOTE 1 The F-2517 will operate over the frequency range of 3.663 to 5.555 Gcs. with a 3 db reduction in the rated minimum output power.

NOTE 2 This value is determined by selecting the 180 mc region of the frequency range which has the greatest differences in power output. The difference between these power levels is divided by two and the plus or minus sign is affixed to denote the difference from an average power level.

MECHANICAL

Package Length	9.90	9.95 max.	Inches
Package Diameter	3.00	3.02 max.	Inches
Package Weight	9 lbs. -14 oz.	10 max.	Pounds
Power Cable Length (to end of MS3106B18-IP Plug)	12	11 min./13 max.	Inches
Output Cable Length (to end of Type "N" Connector)	15	14 min./16 max.	Inches

Additional information for specific applications can be obtained from the

Electron Tube Applications Section
ITT Electron Tube Division
Post Office Box 104
Clifton, New Jersey

F-2517

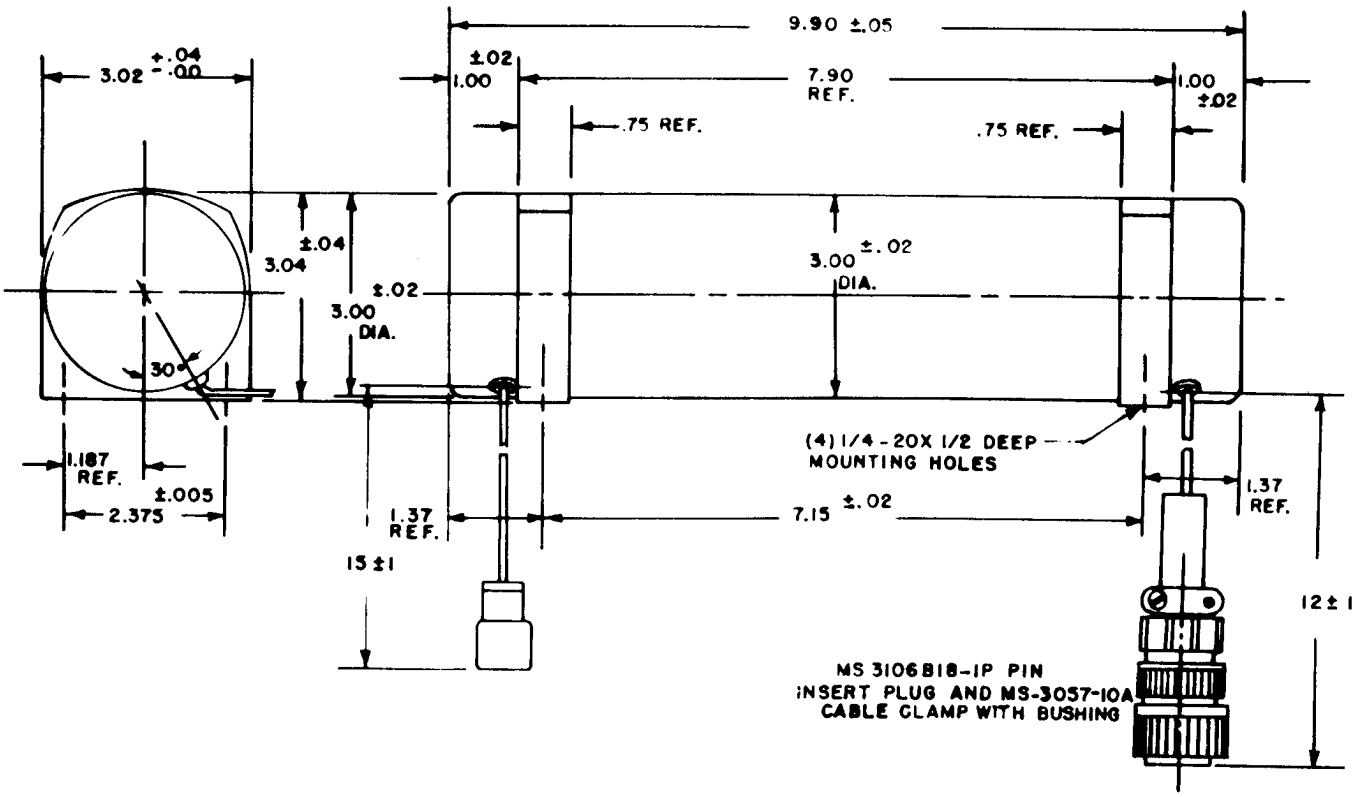
9.90 ±.05
3.02 +.04 -.00
±.02
1.00
7.90 REF.
1.00 ±.02
.75 REF.
.75 REF.
±.04
3.04
±.02
3.00 DIA.
3.00 ±.02 DIA.
30°
1.187 REF.
±.005
2.375
1.37 REF.
7.15 ±.02
15 ±1
(4) 1/4-20X 1/2 DEEP MOUNTING HOLES
1.37 REF.
12 ± 1
MS 3106B18-1P PIN INSERT PLUG AND MS-3057-10A CABLE CLAMP WITH BUSHING

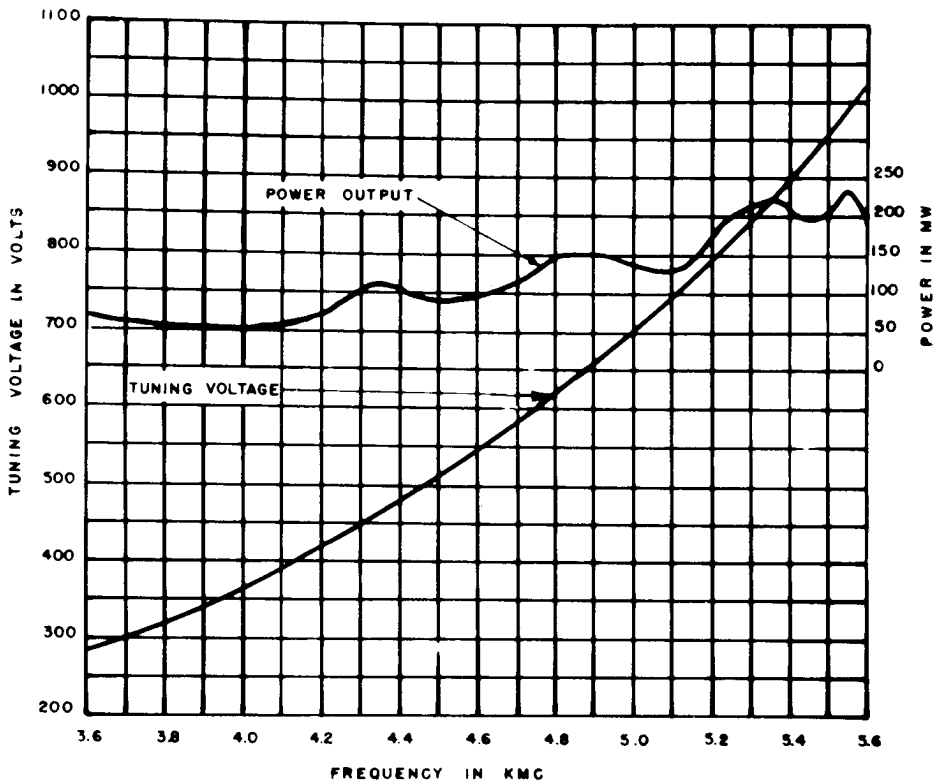
1100
1000
900
800
700
600
500
400
300
200
TUNING VOLTAGE IN VOLTS
POWER OUTPUT
TUNING VOLTAGE
250
200
150
100
50
0
POWER IN MW
3.6
3.8
4.0
4.2
4.4
4.6
4.8
5.0
5.2
5.4
5.6
FREQUENCY IN KMC

ITT ELECTRON TUBE DIVISION
CLIFTON, NEW JERSEY
INTERNATIONAL TELEPHONE AND TELEGRAPH CORPORATION

F-2518 BACKWARD WAVE OSCILLATOR

TENTATIVE

GENERAL

The F-2518 is a voltage-tunable, wide-band oscillator with a minimum output power of 50 milliwatts over its rated operating frequency range. This permanent magnet focused, highly stable device finds applications as a swept signal source in signal generators; master oscillator for frequency diversity transmitters; or typically as a local oscillator in radar or ECM receivers. The tube features a bifilar helix contained in a rugged envelope of simple mechanical design thus providing a highly reliable, compact unit. No cooling is required when the environment is below +60° C ambient temperature.

ELECTRICAL

	TYPICAL	ABSOLUTE	UNITS
Frequency	6.6 – 8.7	Note 1	Gcs
Power Output	50 – 150	50 min.	mw
Power Output Variation	5	6 max.	db
Fine Grain Variation, Note 2	±2.0	±2.5 max.	db/210 mc
VSWR	2.5:1	3:1 max.	–
Output Impedance	50	50	Ohms
Heater Voltage	6.3	6.0 min/6.6 max.	Volts
Heater Current	.97	1.2 max.	Amps
Anode Voltage (with respect to Cathode)	225	250 max.	Volts
Anode Current	0.5	1.0 max.	Ma
Cathode Current	8.0	12 max.	Ma
Helix Voltage (with respect to Cathode)	460 to 1025	400 to 1200	Volts

	TYPICAL	ABSOLUTE	UNITS
Helix Current	3.0	5.0 max.	Ma
Cathode Voltage	Zero (Ground)	Zero (Ground)	Volts
Grid Voltage for no Oscillation (RF Cutoff) (with respect to Cathode)	-15	-30 max.	Volts
Collector Voltage (with respect to Helix)	+100	+150 max.	Volts
Capacitance, Cathode to all Electrodes	40	50 max.	$\mu\mu$fd.
Capacitance, Grid to all Electrodes	33	45 max.	$\mu\mu$fd.
Capacitance, Helix to all other Electrodes and Capsule	101	200 max.	$\mu\mu$fd.
Spurious Output below Signal	50	40 min.	db

NOTE 1 The F-2518 will operate over the frequency range of 6.534 to 8.787 Gcs. with a 3 db reduction in the rated minimum output power.

NOTE 2 This value is determined by selecting the 210 mc region of the frequency range which has the greatest differences in power output. The difference between these power levels is divided by two and the plus or minus sign is affixed to denote the difference from an average power level.

MECHANICAL

Package Length	9.90	9.95 max.	Inches
Package Diameter	3.00	3.02 max.	Inches
Package Weight	9 lbs.-14 oz.	10 max.	Pounds
Power Cable Length (to end of MS3106B18-IP Plug)	12	11 min/13 max.	Inches
Output Cable Length (to end of Type "N" Connector)	6	5 min/7 max.	Inches

Additional information for specific applications can be obtained from the

Electron Tube Applications Section
ITT Electron Tube Division
Post Office Box 104
Clifton, New Jersey

F-2518

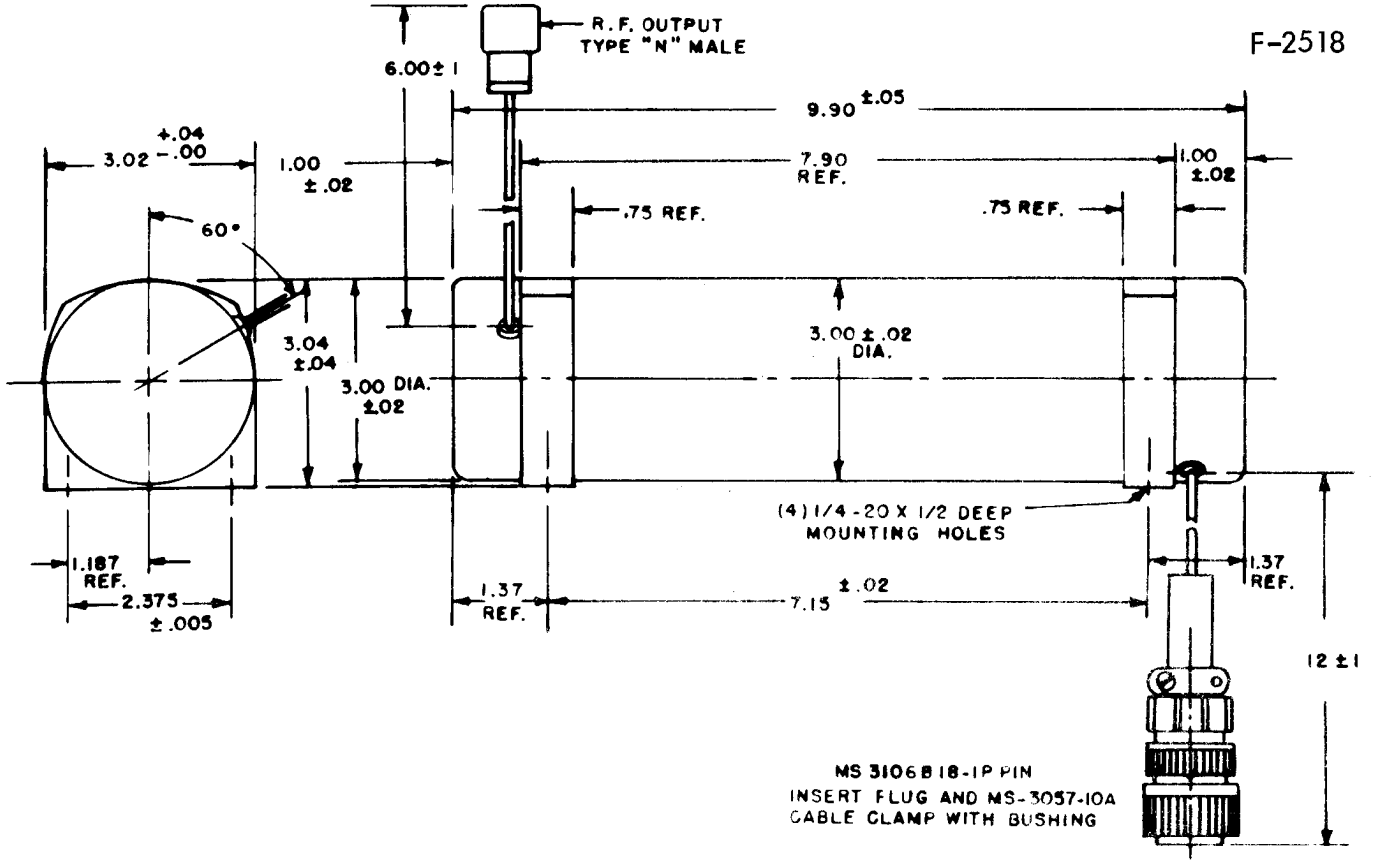
R. F. OUTPUT
TYPE "N" MALE
6.00 ± 1
9.90 ±.05
3.02 +.04 −.00
1.00 ±.02
7.90 REF.
1.00 ±.02
.75 REF.
.75 REF.
60°
3.04 ±.04
3.00 DIA. ±.02
3.00 ±.02 DIA.
(4) 1/4-20 X 1/2 DEEP MOUNTING HOLES
1.187 REF.
2.375 ±.005
1.37 REF.
7.15 ±.02
1.37 REF.
12 ± 1
MS 3106B 18-1P PIN
INSERT PLUG AND MS-3057-10A
CABLE CLAMP WITH BUSHING

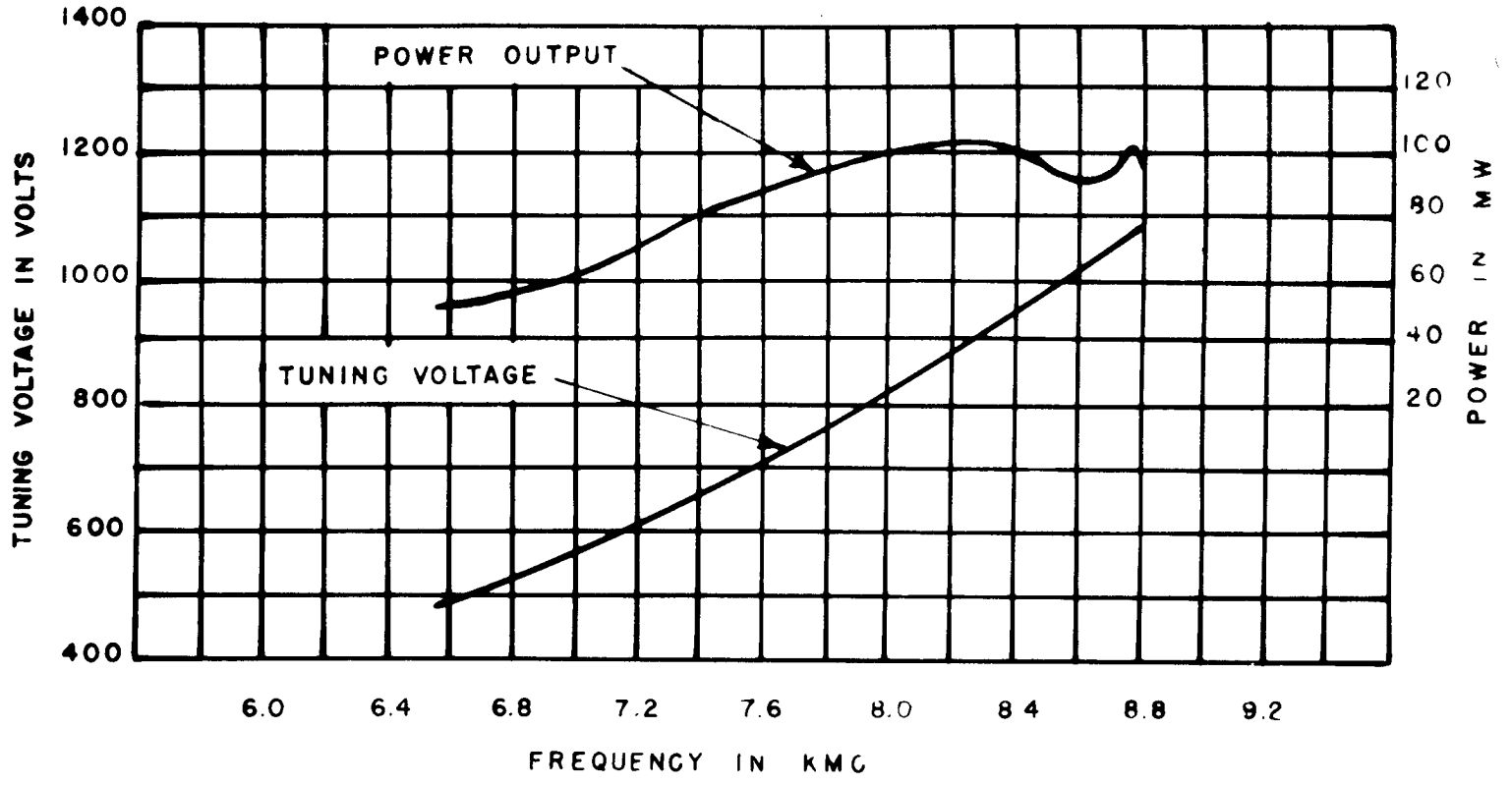
POWER OUTPUT
TUNING VOLTAGE
TUNING VOLTAGE IN VOLTS
1400
1200
1000
800
600
400
POWER IN MW
120
100
80
60
40
20
6.0
6.4
6.8
7.2
7.6
8.0
8.4
8.8
9.2
FREQUENCY IN KMC

ITT ELECTRON TUBE DIVISION
CLIFTON, NEW JERSEY
INTERNATIONAL TELEPHONE AND TELEGRAPH CORPORATION

F-2519 BACKWARD WAVE OSCILLATOR

TENTATIVE

GENERAL

The F-2519 is a voltage-tunable, wide-band oscillator with a minimum output power of 75 milliwatts over its rated operating frequency range. This permanent magnet focused, highly stable device finds applications as a swept signal source in signal generators; master oscillator for frequency diversity transmitters; or typically as a local oscillator in radar or ECM receivers. The tube features a bifilar helix contained in a rugged envelope of simple mechanical design thus providing a highly reliable, compact unit. No cooling is required when the environment is below +60° C ambient temperature.

ELECTRICAL

	TYPICAL	ABSOLUTE	UNITS
Frequency	2.4 -5.3	Note 1	Gcs
Power Output	75 - 300	75 min.	mw
Power Output Variation	6	8 max.	db
Fine Grain Variation, Note 2	+1.0	+1.5 max.	db 290 mc
VSWR	2.5:1	3:1 max.	—
Output Impedance	50	50	Ohms
Heater Voltage	6.3	6.0 min. 6.6 max.	Volts
Heater Current	.98	1.2 max.	Amps
Anode Voltage (with respect to Cathode)	120	250 max.	Volts
Anode Current	0.15	1.0 max.	Ma
Cathode Current	14.0	20 max.	Ma
*Helix Voltage	Zero	Zero	Volts
Helix Current	3.0	5.0 max.	Ma
*Cathode Voltage (with respect to Helix)	-220 to -1850	-150 to -2100	Volts

	TYPICAL	ABSOLUTE	UNITS
*Grid Voltage for no Oscillation (RF Cutoff) (with respect to Cathode)	-11	-30 max.	Volts
*Collector Voltage (with respect to Helix)	+100	+150 max.	Volts
Capacitance, Cathode to all Electrodes	42	50 max.	$\mu\mu$fd.
Capacitance, Grid to all Electrodes	30	45 max.	$\mu\mu$fd.
Capacitance, Helix to all other Electrodes and Capsule	220	300 max.	$\mu\mu$fd.
Spurious Output below Signal	50	40 min.	db.

*The above data shows tube operation with helix at ground potential (Zero Volts). If desired as an alternate, any one of the asterisked elements may be operated at ground potential, provided the other electrode potentials are set at the appropriate relative levels.

NOTE 1 The F-2519 will operate over the frequency range of 2.376 to 5.353 Gcs. with a 3 db reduction in the rated minimum output power.

NOTE 2 This value is determined by selecting the 290 mc region of the frequency range which has the greatest differences in power output. The difference between these power levels is divided by two and the plus or minus sign is affixed to denote the difference from an average power level.

MECHANICAL

Package Length	9.90	9.95 max.	Inches
Package Diameter	3.00	3.02 max.	Inches
Package Weight	9 lbs. 14 oz.	10 max.	Pounds
Power Cable Length (to end of Winchester PM6P Connector)	12	11 min./13 max.	Inches
Output Cable Length (to end of Type "N" Connector)	15	14 min./16 max.	Inches

Additional information for specific applications can be obtained from the

Electron Tube Applications Section
ITT Electron Tube Division
Post Office Box 104
Clifton, New Jersey

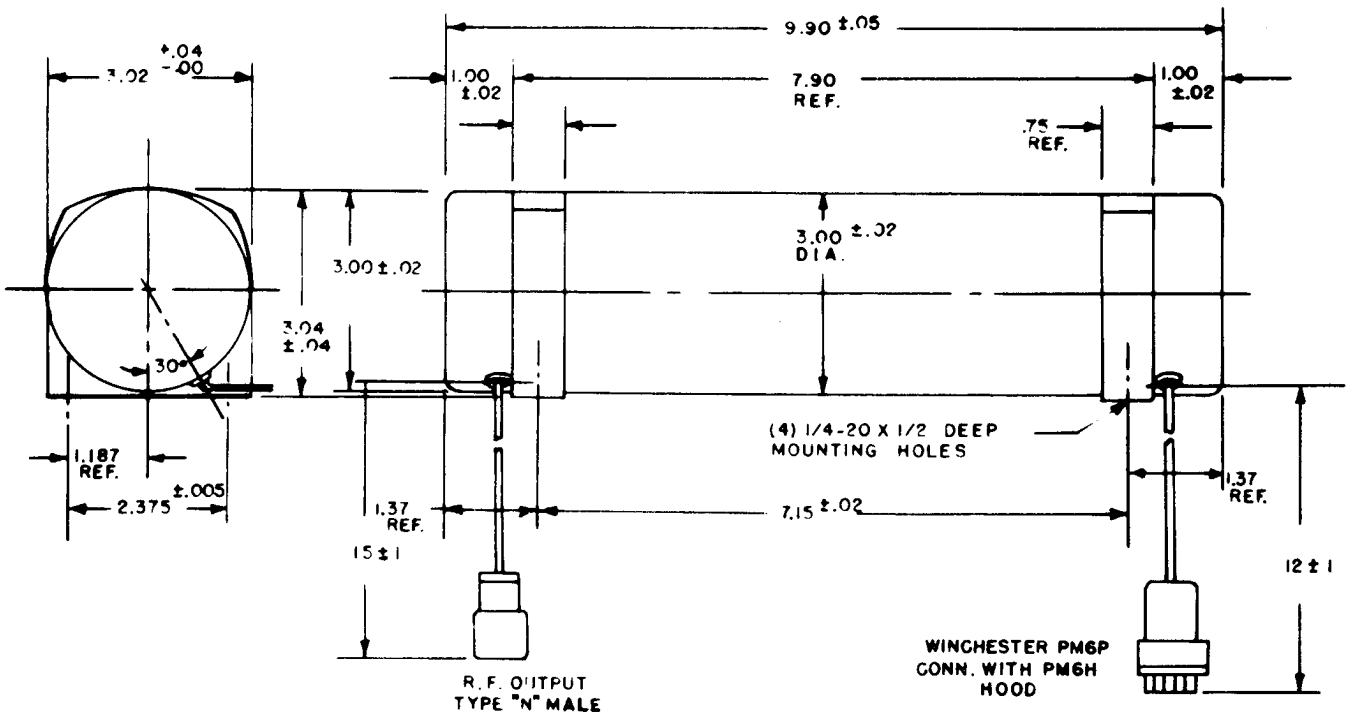
9.90 ±.05
3.02 +.04 -.00
1.00 ±.02
7.90 REF.
1.00 ±.02
.75 REF.
3.00 ±.02
3.00 DIA.
3.04 ±.04
30°
1.187 REF.
2.375 ±.005
(4) 1/4-20 X 1/2 DEEP MOUNTING HOLES
1.37 REF.
7.15 ±.02
1.37 REF.
15 ± 1
12 ± 1
R.F. OUTPUT TYPE "N" MALE
WINCHESTER PM6P CONN. WITH PM6H HOOD

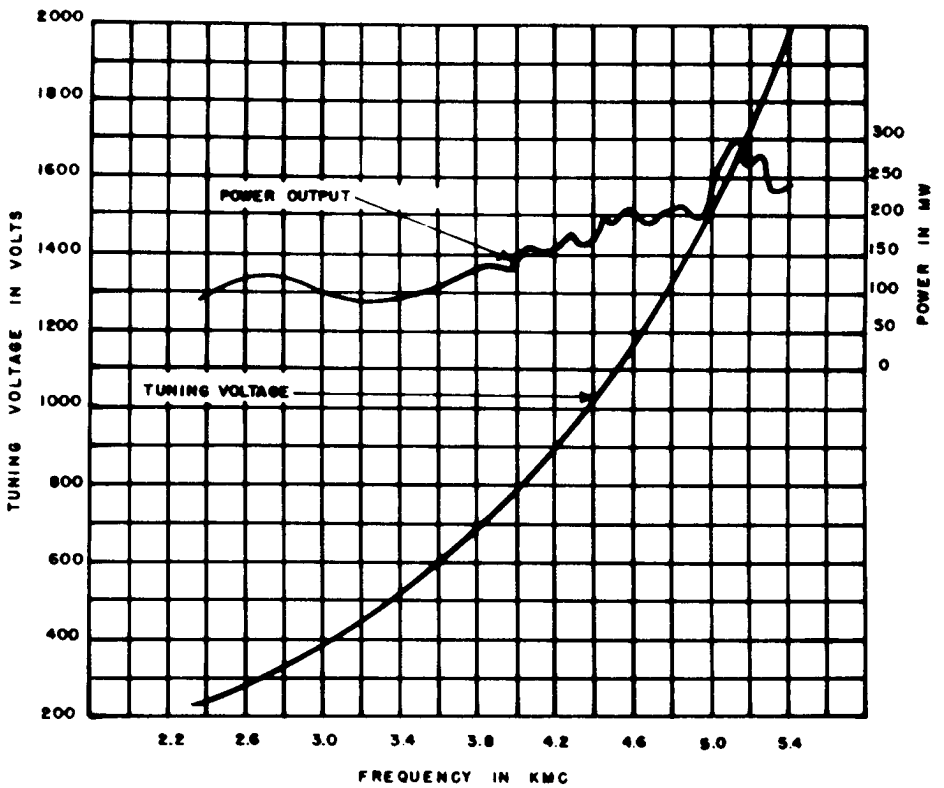
2000
1800
1600
1400
1200
1000
800
600
400
200
TUNING VOLTAGE IN VOLTS
300
250
200
150
100
50
0
POWER IN MW
POWER OUTPUT
TUNING VOLTAGE
2.2
2.6
3.0
3.4
3.8
4.2
4.6
5.0
5.4
FREQUENCY IN KMC

ELECTRON TUBE DIVISION
CLIFTON, NEW JERSEY
INTERNATIONAL TELEPHONE AND TELEGRAPH CORPORATION

F-2520 BACKWARD WAVE OSCILLATOR

TENTATIVE

GENERAL

The F-2520 is a voltage-tunable, wide-band oscillator with a minimum output power of 20 milliwatts over its rated operating frequency range. This permanent magnet focused, highly stable device finds applications as a swept signal source in signal generators: master oscillator for frequency diversity transmitters; or typically as a local oscillator in radar or ECM receivers. The tube features a unifilar helix contained in a rugged envelope of simple mechanical design thus providing a highly reliable, compact unit. No cooling is required when the environment is below +60°C ambient temperature.

ELECTRICAL

	TYPICAL	ABSOLUTE	UNITS
Frequency	7.0 - 12.4	Note 1	Gcs
Power Output	25 - 150	20 min.	mw
Power Output Variation	8	10 max.	db
Fine Grain Variation, Note 2	±1.5	±2 max.	db/540 mc
VSWR	2.5:1	3:1 max.	—
Output Impedance	50	50	Ohms
Heater Voltage	6.3	6.0 min/ 6.6 max.	Volts
Heater Current	.96	1.2 max.	Amps
Anode Voltage (with respect to Cathode)	200	250 max.	Volts
Anode Current	0.5	1.0 max.	Ma
Cathode Current	8.0	15 max.	Ma
*Helix Voltage	Zero	Zero	Volts
Helix Current	4.0	6.0 max.	Ma
*Cathode Voltage (with respect to Helix)	-390 to -2400	-300 to -2500	Volts

	TYPICAL	ABSOLUTE	UNITS
*Grid Voltage for no Oscillation (RF Cutoff) (with respect to Cathode)	-15	-30 max.	Volts
*Collector Voltage (with respect to Helix)	+100	+150	Volts
Capacitance, Cathode to all Electrodes	40	50 max.	μμfd.
Capacitance, Grid to all Electrodes	30	45 max.	μμfd.
Capacitance, Helix to all other Electrodes and Capsule	80	150 max.	μμfd.
Spurious Output below Signal	50	40 min.	db.

*The above data shows tube operation with helix at ground potential (Zero volts). If desired as an alternate, any one of the asterisked elements may be operated at ground potential, provided the other electrode potentials are set at the appropriate relative levels.

NOTE 1 The F-2520 will operate over the frequency range of 6.93 to 12.524 Gcs. with a 3 db reduction in the rated minimum output power.

NOTE 2 This value is determined by selecting the 540 mc region of the frequency range which has the greatest differences in power output. The difference between these power levels is divided by two and the plus or minus sign is affixed to denote the difference from an average power level.

MECHANICAL

Package Length	9.90	9.95 max.	Inches
Package Diameter	3.00	3.02 max.	Inches
Package Weight	9 lbs. -14 oz.	10 max.	Pounds
Power Cable Length (to end of Winchester PM6P Connector)	12	11 min/13 max.	Inches
Output Cable Length (to end of Type "N" Connector)	15	14 min/16 max.	Inches

Additional information for specific applications can be obtained from the

Electron Tube Applications Section
ITT Electron Tube Division
Post Office Box 104
Clifton, New Jersey

F-2520

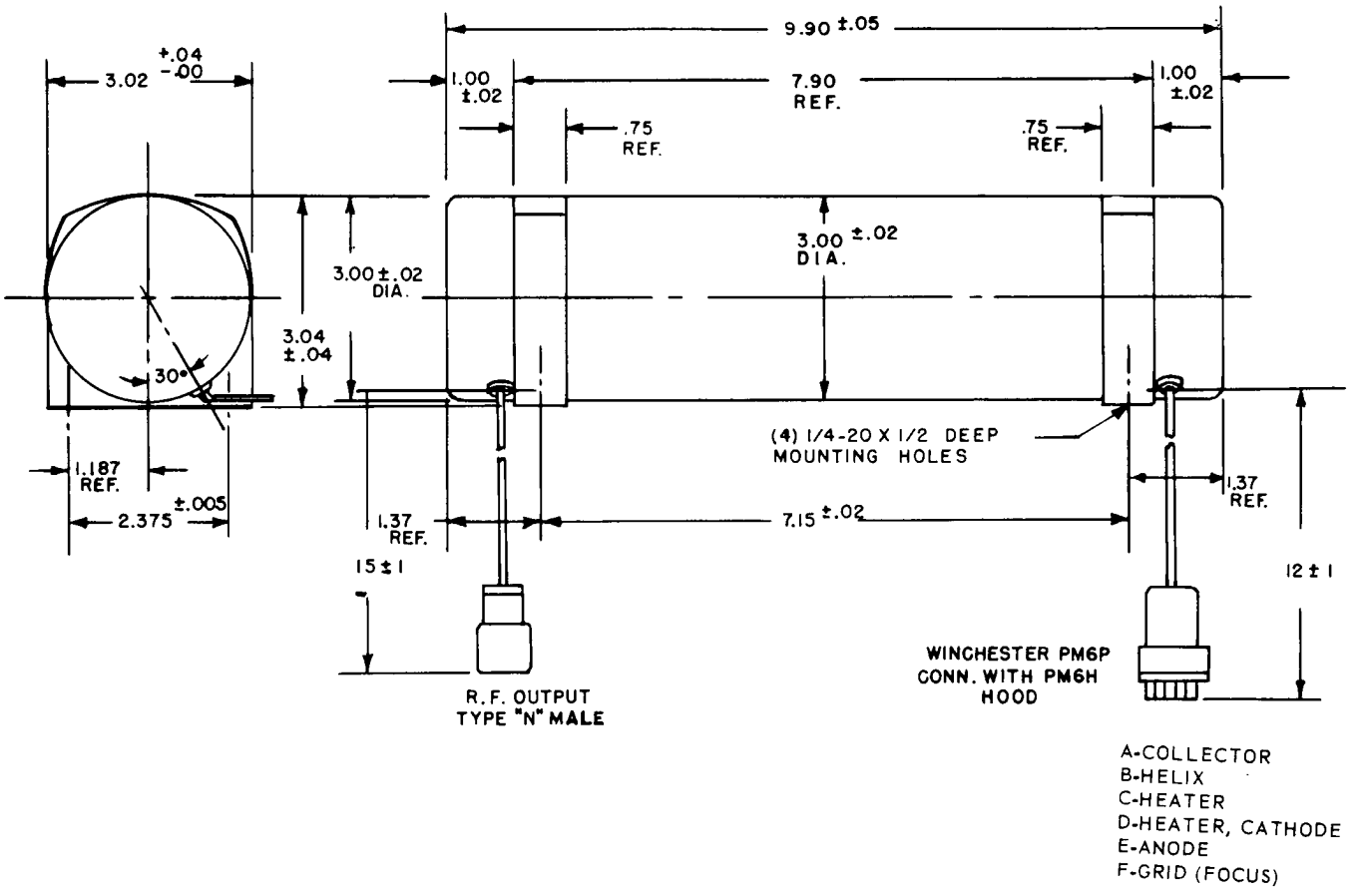
9.90 ±.05
3.02 +.04 -.00
1.00 ±.02
7.90 REF.
1.00 ±.02
.75 REF.
.75 REF.
3.00 ±.02 DIA.
3.00 ±.02 DIA.
3.04 ±.04
30°
1.187 REF.
2.375 ±.005
1.37 REF.
7.15 ±.02
1.37 REF.
15 ± 1
12 ± 1
(4) 1/4-20 X 1/2 DEEP MOUNTING HOLES
R.F. OUTPUT TYPE "N" MALE
WINCHESTER PM6P CONN. WITH PM6H HOOD
A-COLLECTOR
B-HELIX
C-HEATER
D-HEATER, CATHODE
E-ANODE
F-GRID (FOCUS)

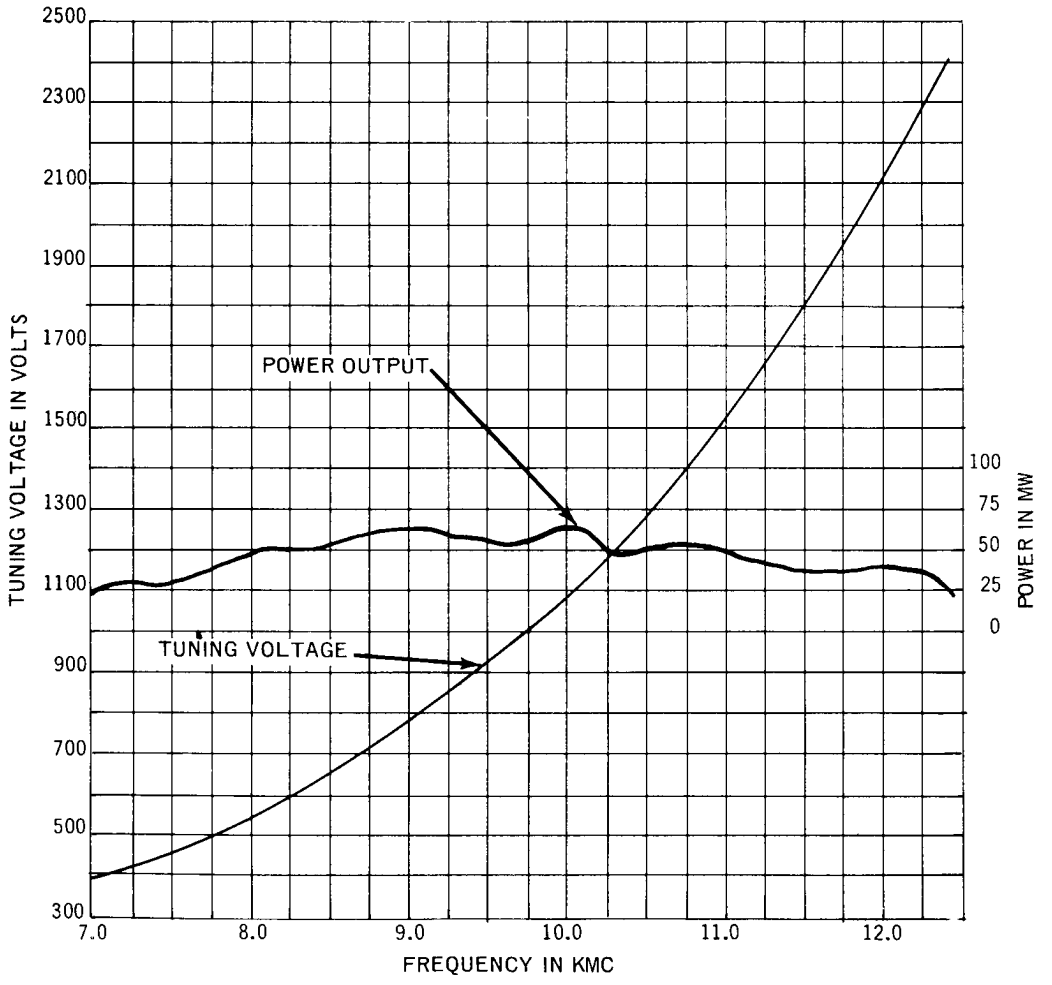
TUNING VOLTAGE IN VOLTS
2500
2300
2100
1900
1700
1500
1300
1100
900
700
500
300
POWER OUTPUT
TUNING VOLTAGE
100
75
50
25
0
POWER IN MW
7.0
8.0
9.0
10.0
11.0
12.0
FREQUENCY IN KMC

ITT ELECTRON TUBE DIVISION
CLIFTON, NEW JERSEY
INTERNATIONAL TELEPHONE AND TELEGRAPH CORPORATION

F-2521 BACKWARD WAVE OSCILLATOR

TENTATIVE

GENERAL

The F-2521 is a voltage-tunable, wide-band oscillator with a minimum output power of 250 milliwatts over its rated operating frequency range. This permanent magnet focused, highly stable device finds applications as a swept signal source in signal generators; master oscillator for frequency diversity transmitters; or typically as a local oscillator in radar or ECM receivers. The tube features a bifilar helix contained in a rugged envelope of simple mechanical design thus providing a highly reliable, compact unit. No cooling is required when the environment is below +60°C ambient temperature.

ELECTRICAL

	TYPICAL	ABSOLUTE	UNITS
Frequency	5.4-5.9	Note 1, Note 3	Gcs
Power Output	250-480	250 min.	mw
Power Output Variation	3	4 max.	db.
Fine Grain Variation, Note 2	±.8	±1.0 max.	db 50 mc
VSWR	2.5:1	3:1 max.	—
Output Impedance	50	50	Ohms
Heater Voltage	6.3	6.0 min. 6.6 max.	Volts
Heater Current	.96	1.2 max.	Amps
Anode Voltage (with respect to Cathode)	210	250 max.	Volts
Anode Current	.25	1.0 max.	Ma
Cathode Current	20	25 max.	Ma
*Helix Voltage	Zero	Zero	Volts
Helix Current	3.0	6.0 max.	Ma
*Cathode Voltage (with respect to Helix)	-937 to -1256	-800 to -1400	Volts

	TYPICAL	ABSOLUTE	UNITS
*Grid Voltage for no Oscillation (RF Cutoff) (with respect to cathode)	-25	-30 max.	Volts
*Collector Voltage (with respect to Helix)	+100	+150 max.	Volts
Capacitance, Cathode to all Electrodes	42	50 max.	$\mu\mu$fd.
Capacitance, Grid to all Electrodes	30	45 max.	$\mu\mu$fd.
Capacitance, Helix to all other Electrodes and Capsule	210	300 max.	$\mu\mu$fd.
Spurious Output below Signal	50	40 min.	db.

*The above data shows tube operation with helix at ground potential (Zero Volts). If desired as an alternate, any one of the asterisked elements may be operated at ground potential, provided the other electrode potentials are set at the appropriate relative levels.

NOTE 1 The F-2521 will operate over the frequency range of 5.346 to 5.959 Ccs. with a 3 db reduction in the rated minimum output power.

NOTE 2 This value is determined by selecting the 50 mc region of the frequency range which has the greatest differences in power output. The difference between these power levels is divided by two and the plus or minus sign is affixed to denote the difference from an average power level.

NOTE 3 The F-2521 will operate over the frequency range of 4 to 7 Gcs. at a reduced power output of not less than 20 milliwatts. Under this type of operation a typical cathode voltage range of -370 to -2390 volts will apply. However, caution must be observed that the cathode current does not exceed 14 ma and the cathode voltage does not exceed -2500 volts. A typical anode voltage of 125 volts will be required for this type of operation and the maximum anode voltage must be such that the cathode current does not exceed 14 ma.

MECHANICAL

Package Length	9.90	9.95 max.	Inches	Output Cable Length (to end of type "N" Connector)	15	14 min/16 max.	Inches
Package Diameter	3.00	3.02 max.	Inches				
Package Weight	9 lbs.-14 oz.	10 max.	Pounds				
Power Cable Length (to end of Winchester PM6P Connector)	12	11 min/13 max.	Inches				

Additional information for specific applications can be obtained from the

Electron Tube Applications Section
ITT Electron Tube Division
Post Office Box 104
Clifton, New Jersey

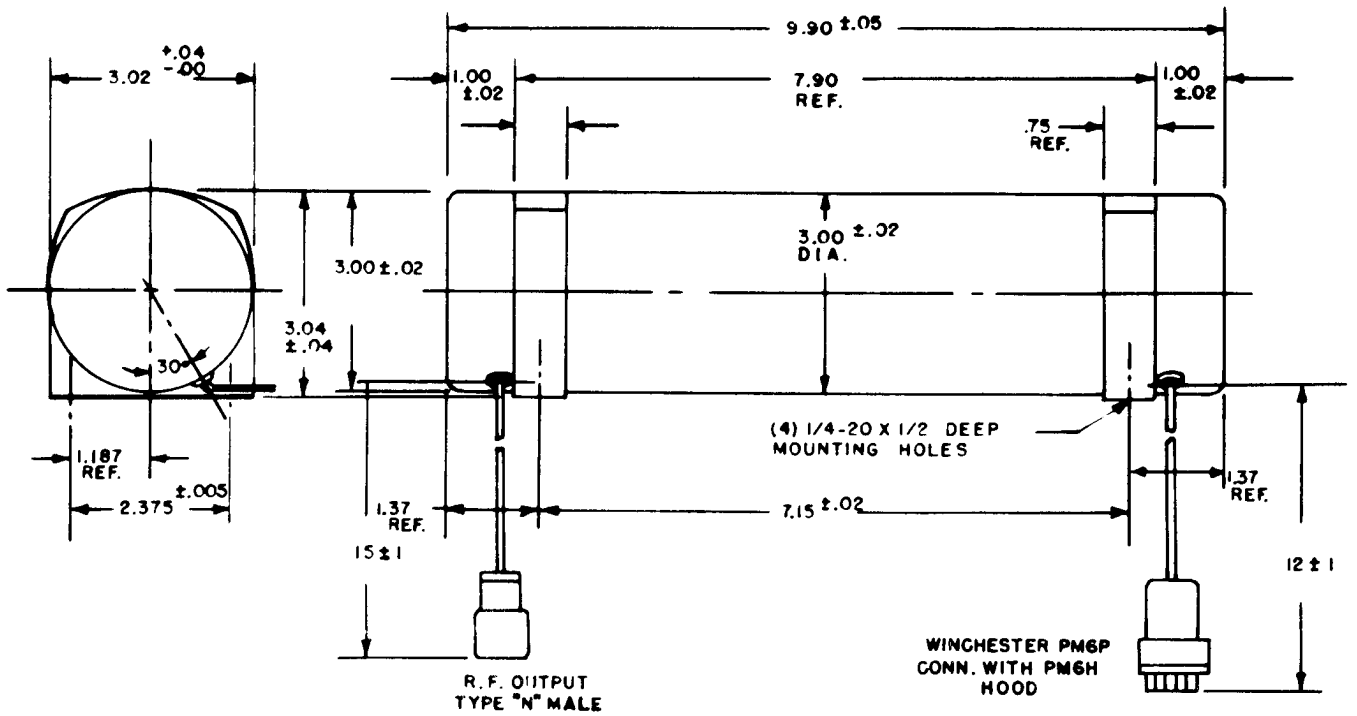
9.90 ±.05
3.02 +.04 -.00
1.00 ±.02
7.90 REF.
1.00 ±.02
.75 REF.
3.00 ±.02
3.00 ±.02 DIA.
3.04 ±.04
30°
(4) 1/4-20 X 1/2 DEEP MOUNTING HOLES
1.187 REF.
2.375 ±.005
1.37 REF.
7.15 ±.02
1.37 REF.
15 ±1
12 ±1
R.F. OUTPUT TYPE "N" MALE
WINCHESTER PM6P CONN. WITH PM6H HOOD

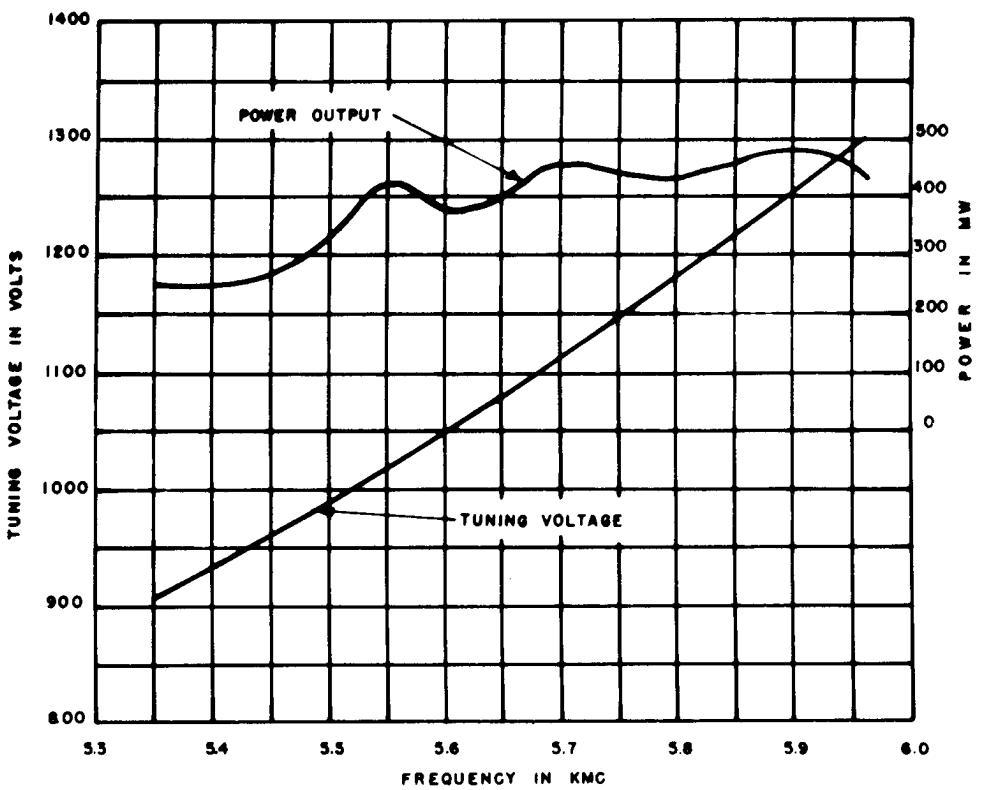
POWER OUTPUT
TUNING VOLTAGE
TUNING VOLTAGE IN VOLTS
1400
1300
1200
1100
1000
900
800
POWER IN MW
500
400
300
200
100
0
5.3
5.4
5.5
5.6
5.7
5.8
5.9
6.0
FREQUENCY IN KMC

ELECTRON TUBE DIVISION
CLIFTON, NEW JERSEY
INTERNATIONAL TELEPHONE AND TELEGRAPH CORPORATION

F-2544
Backward Wave
Oscillator

TENTATIVE

GENERAL:

The F-2544 is a voltage-tunable, wide-band oscillator with a minimum output power of 10 milliwatts over its rated operating frequency range. This permanent magnet focused, highly stable device finds applications as a swept signal source in signal generators; master oscillator for frequency diversity transmitters; or typically as a local oscillator in radar or ECM receivers. The tube features a unifilar helix contained in a rugged envelope of simple mechanical design thus providing a highly reliable, compact unit. No cooling is required when the environment is below +60°C ambient temperature.

ELECTRICAL:	Typical	Absolute	Units
Frequency	4.0 - 8.0	-	Gcs
Power Output	15 - 200	10 min.	mw
Power Output Variation	10	12 max.	db
Fine Gain Variation, Note 1	±2.0	±2.5 max.	db/400 mc
VSWR	2.5:1	3:1 max.	-
Output Impedance	50	50	Ohms
Heater Voltage	6.3	6.0 min./6.6 max.	Volts
Heater Current	.96	1.2 max.	Amps
Anode Voltage (with respect to cathode)	150	250 max.	Volts
Anode Current	0.3	1.0 max.	Ma
Cathode Current	12	15 max.	Ma

	Typical	Absolute	Units
Helix Voltage	Zero	Zero	Volts
Helix Current	3.5	6.0 max.	Ma
Cathode Voltage (with respect to helix)	-215 to -1700	-180 to -2000	Volts
Grid Voltage for no Oscillation (RF Cutoff) (with respect to cathode)	-13	-30 max.	Volts
Collector Voltage	Zero	Zero	Volts
Capacitance, Cathode to all Electrodes	18	25 max.	μfd.
Capacitance, Cathode to all Electrodes	15	25 max.	μfd.
Capacitance, Helix to all other Electrodes & Capsule	170	200 max.	μfd.
Spurious Output below Signal	50	40 min.	db

Note 1. This value is determined by selecting the 400 mc region of the frequency range which has the greatest differences in power output. The difference between these power levels is divided by two and the plus or minus sign is affixed to denote the difference from an average power level.

MECHANICAL:

Package Length	7.06	7.08 max.	Inches
Package Diameter	2.50	2.52 max.	Inches
Package Weight	3 lbs., 6 oz.	3.5 max.	Pounds
Power Cable Length (to end of Winchester PM6P Connector)	12	11 min./13 max.	Inches
Output Cable Length (to end of Type "N" Connector)	10 1/2	9 1/2 min./ 11 1/2 max.	Inches

Typical

Tuning Curve and Power Output

BWO Type F-2544

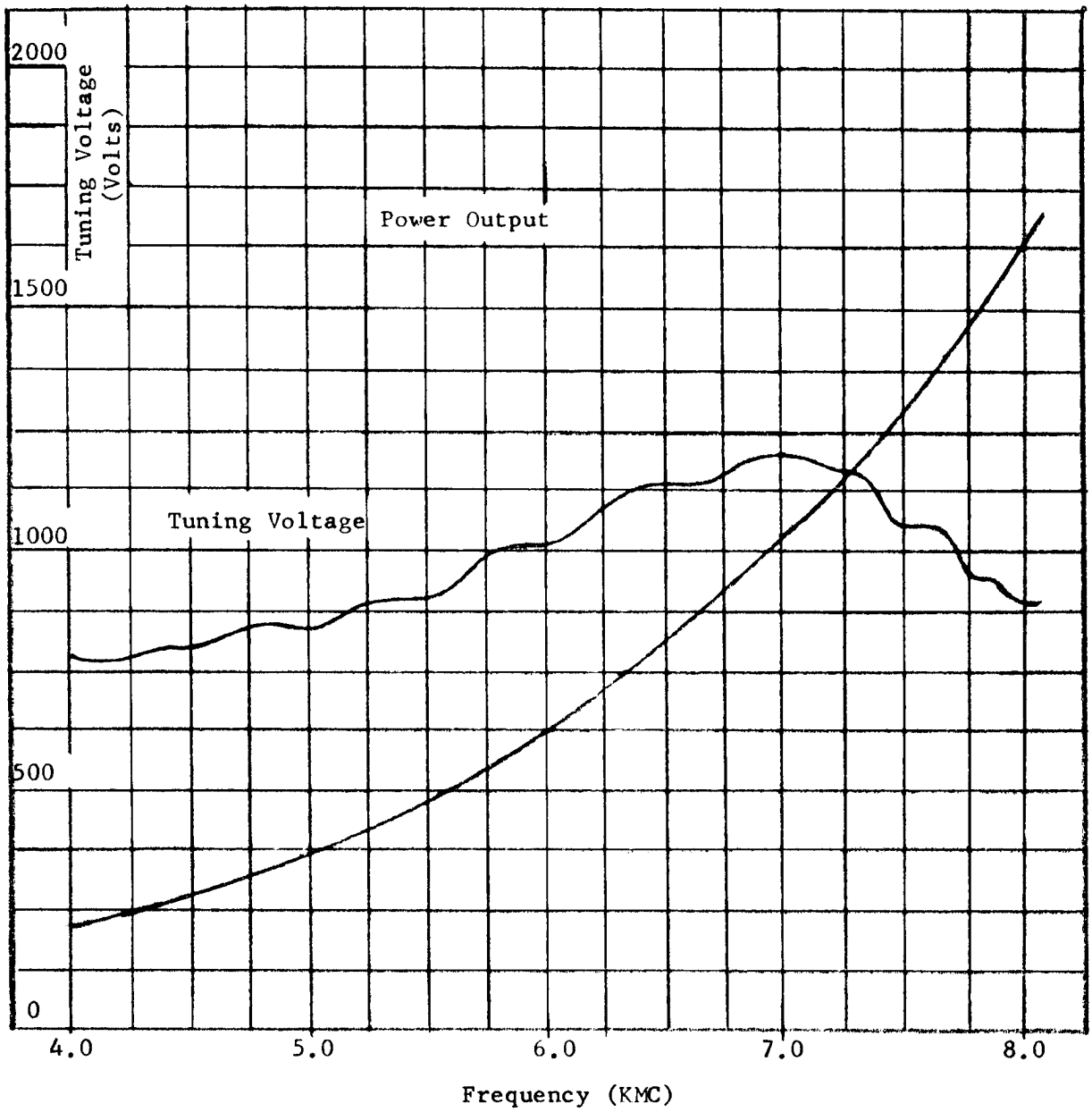

3/64

ITT ELECTRON TUBE DIVISION
CLIFTON, NEW JERSEY
INTERNATIONAL TELEPHONE AND TELEGRAPH CORPORATION

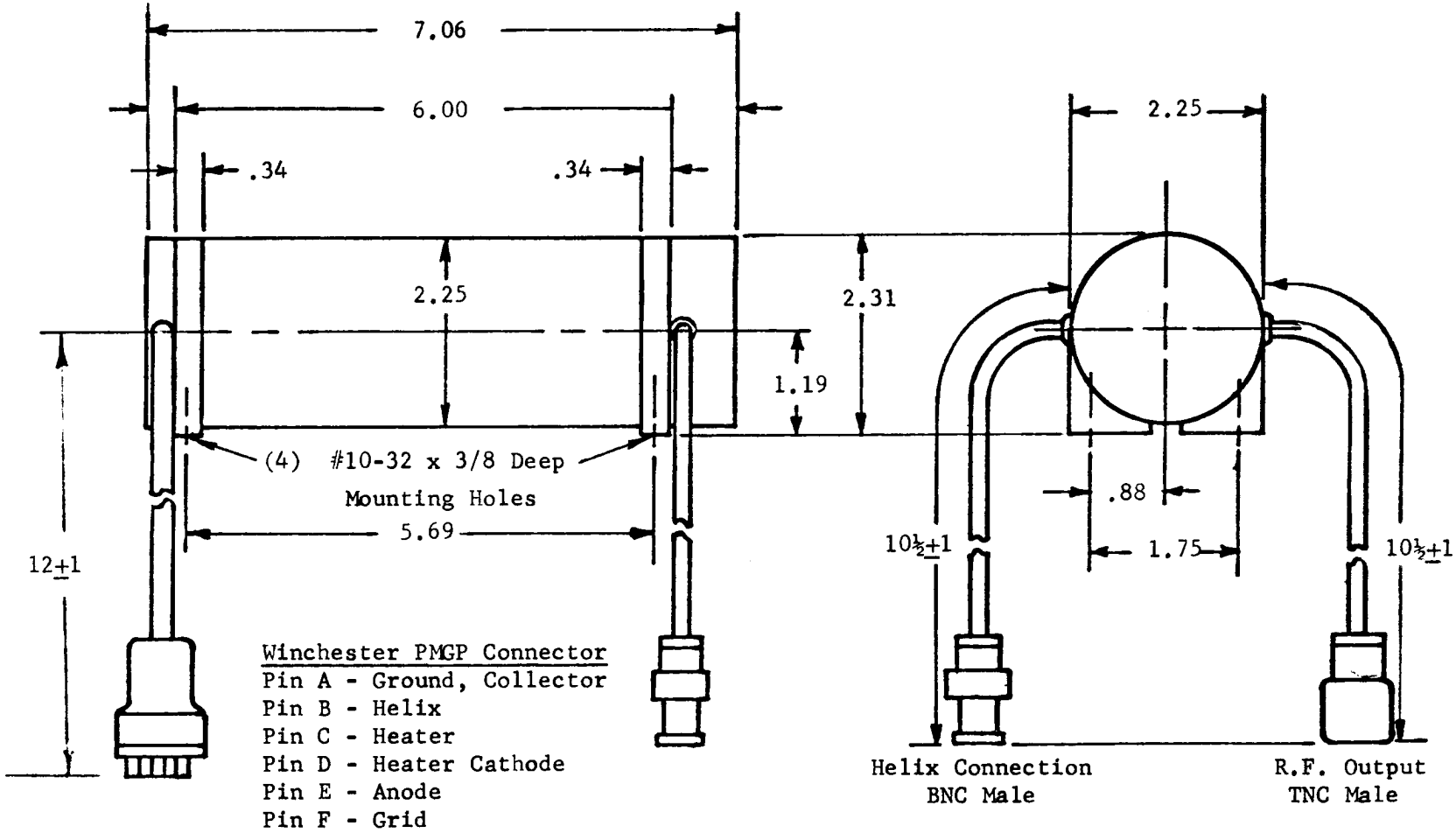

TENTATIVE

Permanent-Magnet Backward-Wave Oscillator

F-2544

3/64

ELECTRON TUBE DIVISION
CLIFTON, NEW JERSEY
INTERNATIONAL TELEPHONE AND TELEGRAPH CORPORATION

F-2900 REFLEX KLYSTRON

DESCRIPTION:

Type F-2900 Reflex Klystrons are millimeter wavelength tubes designed for operation in the 33 to 38 Gc frequency range. Each tube is fixed tuned and will deliver a minimum power output of one watt at its specific operating frequency in this range.*

The specific operating frequency may be shifted 2% while maintaining a minimum output of 1 watt, by using the MT-80 mechanical tuner which is available as an optional accessory.

The electronic tuning range as measured between the half power points is 0.1% of the specific operating frequency.

The small size and rugged construction of these tubes make them suitable as test equipment primary signal sources, receiver local oscillators, parametric amplifier pumps and low power transmitters.

TYPICAL OPERATION:

Operating Frequency	34.7	Gc	Grid Voltage (with respect to cathode)	−50	Volts
Beam Voltage	2000	Volts	Power Output	1.1	Watt
Beam Current	40	ma	Electronic Tuning (between 3 db points)	35	mc
Reflector Voltage (with respect to cathode)	−780	Volts	Heater Voltage	6.3	Volts
			Heater Current	1.2	Amperes

MAXIMUM RATINGS:

Beam Voltage	2500	Volts	Reflector Voltage	−25 to −1000	Volts
Beam Current	50	ma	Grid Voltage	0 to −100	Volts

MECHANICAL SPECIFICATIONS:

Cathode	Dispenser Type	Physical Dimensions		See Outline Drawing
Cooling	Forced Air	RF Connection	UG-381/U Flange	
Weight	20 oz.		RG-96/U Waveguide	
Base Connection	Flying Leads	Mounting Position		Any

* Specify frequency required when ordering.

F-2900

8mm REFLEX KLYSTRON OUTLINE

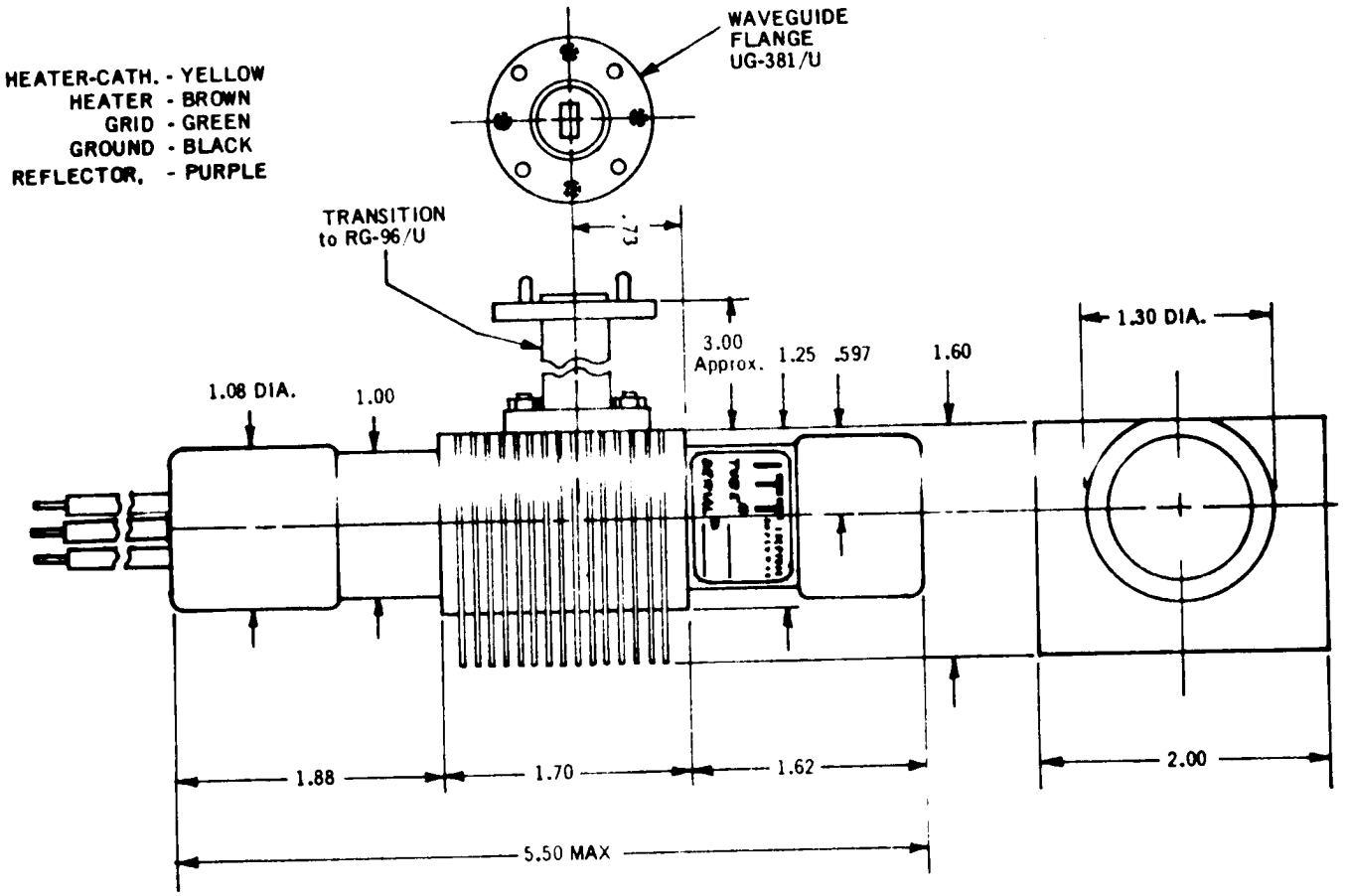

OUTPUT MODE PATTERN VERSUS REFLECTOR VOLTAGE FOR TUBE TYPE F-2900

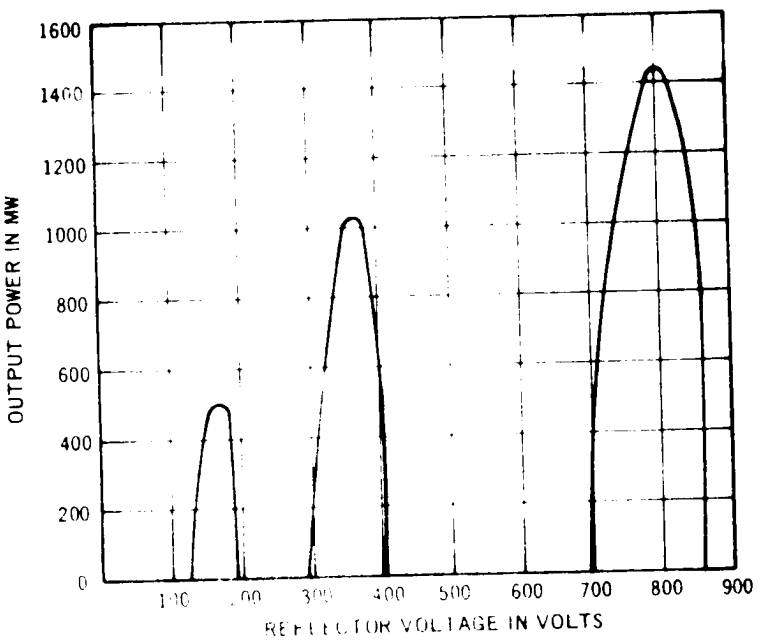

TENTATIVE DATA

IMAGE DISSECTOR

Type F4011

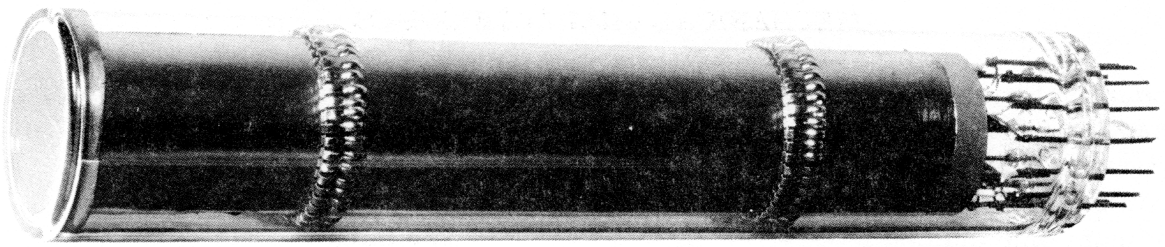

The F4011 model number designates a family of 1-1/2 inch diameter magnetically focused and deflected image dissector camera tubes. Image dissectors in this series can be provided with S-1, S-11, and S-20 type photocathodes, and with various scanning aperture shapes and sizes ranging from approximately 0.0005 inch to 0.35 inch (Notes 1 and 3).

The image dissector has several properties which make it well suited to such applications as slide-projector readers, hard-copy readers, electronically scanned spectrometers, flaw detectors for industrial process controls, and electronic star trackers. A few of these image dissector properties which should be considered when selecting an appropriate camera tube for a specific application are: (a) high resolution-determined primarily by the size of the defining aperture (b) nonstorage - allowing the scan rate to be varied without changing the signal current amplitude (c) reliable operation over a long period of time - simple rugged construction and lack of thermionic cathode and (d) linear dynamic range of several orders of magnitude.

GENERAL CHARACTERISTICS

Photocathode spectral response (Note 1)	S-1, S-11, or S-20 (See Figure 1)
Focusing method (Note 2)	Magnetic
Deflection method (Note 2)	Magnetic
Aperture size limits (Notes 1 and 3)	0.0005 to 0.350 inch
Number of dynodes (Note 4)	10

MECHANICAL CHARACTERISTICS

Window material	Corning 7056 or equivalent
Window index of refraction	1.5
Window thickness	0.080 ± 0.005 inch
Maximum useful photocathode diameter	1.1 inches
Maximum tube diameter	1.5 inches
Maximum over-all tube length	8.2 inches
Weight (approximate)	5.5 ounces
Base	Small button, 14 pin
Mounting position	Any

RECOMMENDED OPERATING CONDITIONS

Photocathode voltage	-2400 volts
Drift tube and dynode No. 1 voltage	-1800 volts
Dynode No. 2 voltage	-1645 volts
Dynode No. 3 voltage	-1490 volts
Dynode No. 4 voltage	-1335 volts
Dynode No. 5 voltage	-1180 volts
Dynode No. 6 voltage	-1025 volts
Dynode No. 7 voltage	-870 volts
Dynode No. 8 voltage	-715 volts
Dynode No. 9 voltage	-560 volts
Dynode No. 10 voltage	-325 volts
Anode voltage	0 volts
Ambient temperature	25° C
Nominal axial magnetic field strength with 600 volts between photocathode and drift tube/dynode No. 1 (Note 5)	40 gauss

TENTATIVE PERFORMANCE CHARACTERISTICS

For recommended operating conditions:

	Minimum	Typical	
Cathode luminous sensitivity (Notes 6 and 7)			
S-1	12	20	μa/lumen
S-11	30	40	μa/lumen
S-20	80	100	μa/lumen
Cathode peak radiant sensitivity (Note 7)			
S-1 (8000 Å)	--	0.0022	amperes/watt
S-11 (4400 Å)	--	0.032	amperes/watt
S-20 (4200 Å)	--	0.043	amperes/watt
Current amplification	5×10^4	5×10^5	
Typical paraxial resolution (Note 8)	--	1500	tv lines/inch
Typical off-axis resolution, static focus (Note 9)	--	800	tv lines/inch
Typical off-axis resolution, dynamic focus (Note 9)	--	1200	tv lines/inch
Image distortion	See Note 10		
Deflection linearity	See Note 11		

MAXIMUM RATINGS

Absolute Maximum Values

Average photocathode current density (Note 12)	10 μa/cm^2
Average anode current (Note 12)	100 μa
Peak anode current (Note 13)	250 μa
Ambient temperature	75° C
Over-all voltage	3400 volts
Photocathode to drift tube and dynode No. 1 voltage	1000 volts
First dynode to anode voltage	2400 volts
Dynode No. 9 to Dynode No. 10 voltage	300 volts
Last dynode to anode voltage	400 volts

NOTES

1. When ordering an F4011, two specifications in addition to the series designation "F4011" are required, namely: (1) the type of spectral response desired, and (2) the dimension of the defining aperture in mils. These two numerical specifications should follow the series designation in brackets as follows:

EXAMPLE 1: AN F4011 (S1, 2R). This calls for an F4011 image dissector with an S-1 type photocathode and a 0.002 inch diameter round defining aperture.

EXAMPLE 2: An F4011 (S-11, 1S). This calls for an F4011 image dissector with an S-11 type photocathode and a 0.001 inch x 0.001 inch square aperture.

EXAMPLE 3: An F4011 (S-20, 4 x 100). This calls for an F4011 image dissector with an S-20 photocathode and a 0.004 inch x 0.100 inch slit shaped rectangular aperture.

2. The F4011 is designed to utilize the standard deflection and focus coil assembly available commercially for 1-1/2 inch OD vidicons (such as the RCA 8051 vidicon). Custom built coils for improved resolution and reduced distortion are also available from ITTIL.

3. The F4011 is available with aperture sizes and shapes varying within the dimensional limits of 0.0005 inch and 0.35 inch. A typical aperture diameter would be 0.0015 inch. Added tooling costs may be involved if specialized sizes or shapes are required.

4. Additional dynodes can be supplied on special order.

5. All commercially available focus solenoids have a substantial variation in magnetic field intensity along the axis of the coil. For example, in the Cleveland Electronics CE1 15VFA-259 vidicon coil assembly, when the image section of the F4011 (5 inches long from photocathode to defining aperture) is centered in the focus field, the axial field strength varies by a factor of 2.5 from the extremes to the center of the drift space. By relocating the photocathode closer to the "waist" of the solenoid field, the ratio of magnetic flux density at the photocathode to flux density at the defining aperture is increased. Resultant image magnification increases resolution at the cost of S/N. This maneuver is equivalent to adjusting aperture size.

6. With 10^{-2} lumen source of 2870 degrees K color temperature (illumination normal to plane of window).

7. At 270 volts dc applied between photocathode and all other elements connected together.

8. For aperture sizes exceeding approximately 0.003 inch the resolution capabilities of the F4011 can be predicted quite accurately based on the known aperture size and shape. For example, an F4011 with a 0.010 inch square aperture will give very nearly 100 percent modulation when scanning a 100 tv lines per inch by (50 line pairs per inch, each line being 0 010 inch wide) pattern of equal light and dark bars at right angles with the square aperture aligned with the scan direction (assuming no bandwidth limitations on the response frequency) In the 0 001 inch to 0.003 inch size region and below, the absolute emission energy of the photoelectrons begins to play a significant role in the resolving power, depending on the wavelength of the input radiation, the type of photocathode, the accelerating voltage selected for the tube, etc. Figure 2 shows the measured paraxial resolution characteristics for an F4011 with a 0.001 inch round aperture under recommended operating conditions. The percentage modulation of 25 percent achieved in this tube at 1500 tv lines/inch (1000 tv lines/vertical raster height) is particularly noteworthy.

9. At 0.75 inch image diameter. The F4011 utilizes a unique new electron-optical design (patent applied for) to achieve optimum off-axis imaging properties. This new design represents a noteworthy improvement in the already excellent characteristics of the magnetic focusing - magnetic deflection combination used so successfully in image orthicon and vidicon television camera tubes, as well as in the majority of ITTIL image dissectors.

For many applications, particularly when using the F4011 with one of the larger apertures (See Note 4), off-axis resolution losses are difficult to observe experimentally. For smaller aperture tubes under limiting resolution conditions, the losses appear to be approximately as given. ITTIL should be consulted for the latest information on this parameter.

Static focus applies to a fixed focus condition, adjusted for optimum paraxial focus. Some over-all improvement in average resolution can be achieved by static focusing at some intermediate radial position instead.

Dynamic focus applies to a condition in which small adjustments in the focusing magnetic field or electric field are made in synchronism with the scan in order to achieve optimum focus at the particular image area being observed. Dynamic focus is required for the ultimate in over-all resolving power.

10. Image distortion in the F4011 has not yet been determined. Because of the unique electron optical design and the well known low distortion characteristics of solenoidal magnetic focusing and deflection (e. g. 1-1/2 inch vidicon), distortion is expected to be low, probably much less than 5 percent.

11. Linearity of deflection (scan position versus deflection current) in the F4011 is expected to be similar to the 1-1/2 inch vidicon, i. e. very good. Reproducibility of scan position versus deflection current is often of greater significance and is expected to be excellent provided the scan coils are not allowed to shift position with respect to the tube and various power supplies (focus, accelerating voltages, etc.) are stabilized. ITTIL should be consulted for up-to-date quantitative information on image distortion and scan linearity.

12. Averaged over any interval not greater than 1 second.

13. For 10-percent maximum departure from linearity of output current versus input flux.

14. Registered JEDEC response curve. All spectral responses are normalized to 100 percent following registered JEDEC recommendations. Permissible tolerances on these various registered S-response curves have been or are being established by JEDEC.

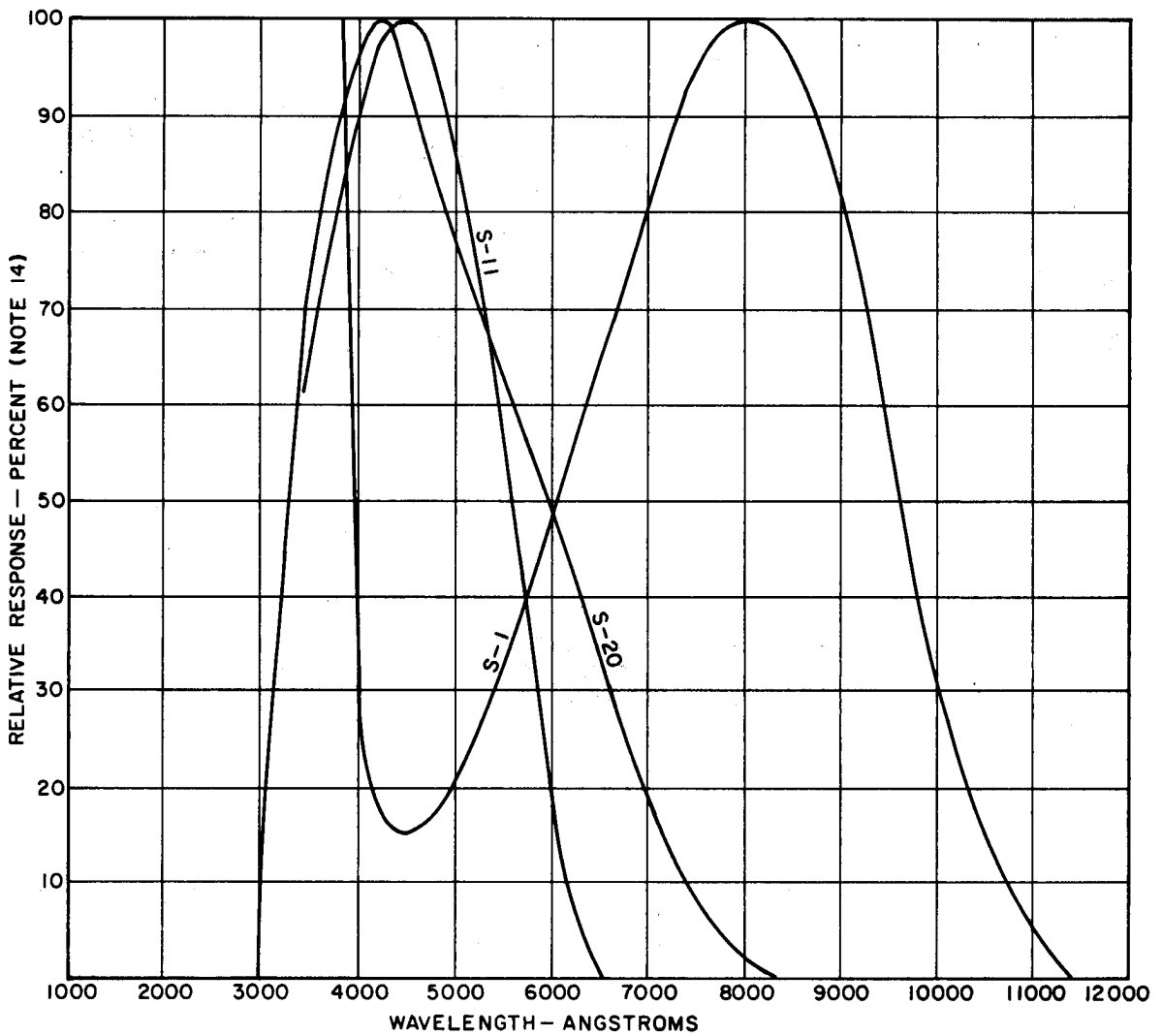

Figure 1 Spectral-Sensitivity Curves

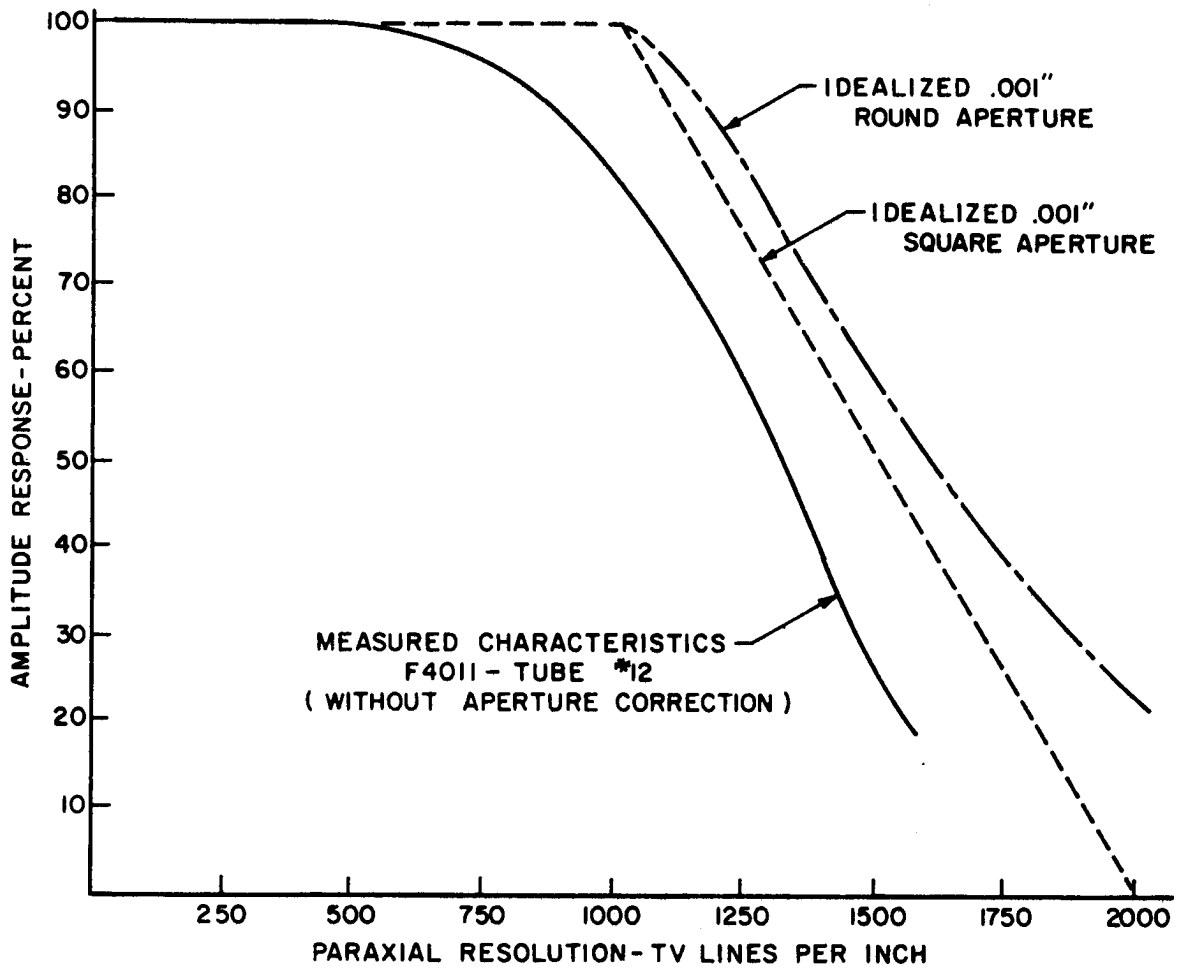

Figure 2 Resolution Characteristics

Outline Drawing

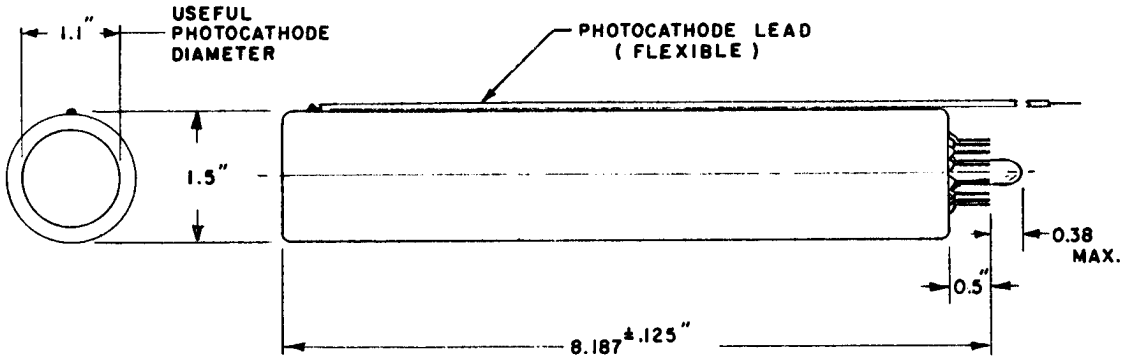

Pin Connections and Basing Diagram

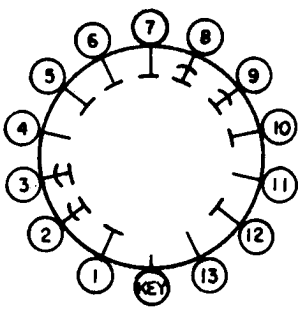

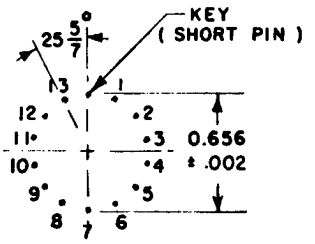

Pin 1 Anode	Pin 9 Dynode No. 2
Pin 2 Dynode No. 10	Pin 10 Drift Tube (DT)
Pin 3 Dynode No. 9	Pin 11 NC
Pin 4 NC	Pin 12 Shield
Pin 5 IC to DT	Pin 13 NC
Pin 6 IC to DT	Key NC (Short Pin)
Pin 7 IC to DT	Flying Lead Photocathode
Pin 8 Dynode No. 1	

IC - Internally Connected
NC - No Connection

Note: Pins 11 and 13 are internally connected to the drift tube in the F4011 (S-20).

ITT INDUSTRIAL LABORATORIES
FORT WAYNE, INDIANA

1½ INCH
DEFLECTION AND FOCUS COIL ASSEMBLIES
FOR F4011 VIDISSECTOR

DEFLECTION YOKES

ITTIL PART NO.	HORIZONTAL COIL			VERTICAL COIL		
	Inductance mh	Resistance ohms	Typ. Defl. Sens. ma/in.	Inductance mh	Resistance ohms	Typ. Defl. Sens. ma/in.
F4504	1.0	3.3	250	50.0	190.0	30
F4508	3.0	11.0	150	3.0	11.0	150
F4505	50	156	40	50.0	156	40

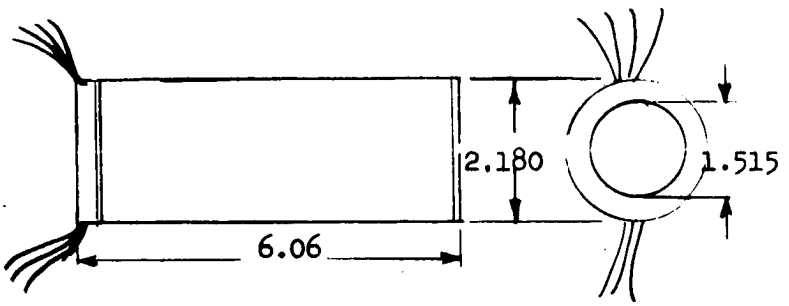

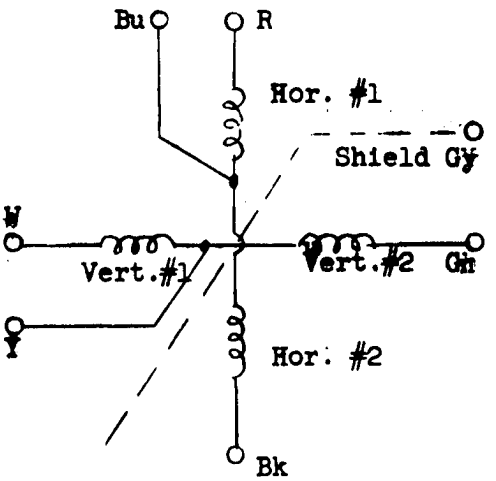

FOCUS COILS

ITTIL PART NO.	RESISTANCE ohms	AVERAGE CURRENT
F4506	700	40ma
F4507	50	200ma

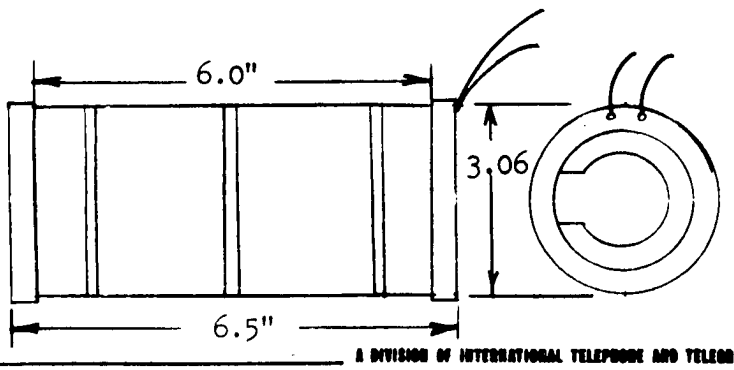

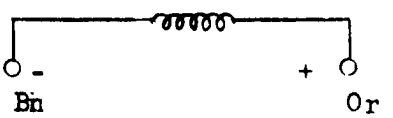

10-26-64

TENTATIVE DATA

VIDISSECTOR - IMAGE DISSECTOR

Type F4012

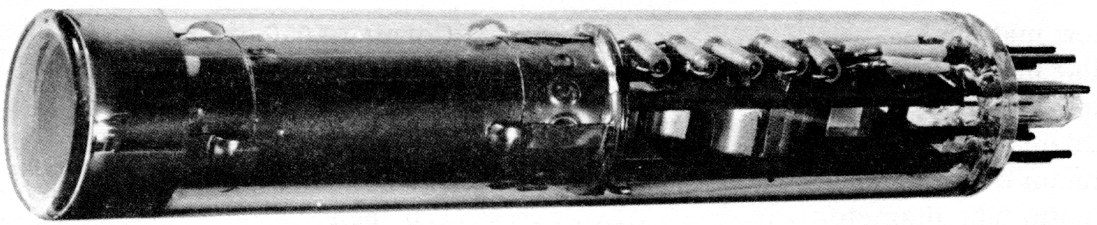

DESCRIPTION

The F4012 Vidissector is a 1 inch diameter magnetically focused and deflected image dissector camera tube. Photocathodes of the S-1, S-11, and S-20 type can be provided along with various scanning aperture shapes and sizes ranging from 0.0005 inch to 0.150 inch (Notes 1 and 3).

APPLICATION

The image dissector has several properties which make it well suited to such applications as slide-projector readers, hard-copy readers, electronically scanned spectrometers, flaw detectors for industrial process controls, and electronic star trackers. A few of these image dissector properties which should be considered when selecting an appropriate camera tube for a specific application are: (a) high resolution - determined primarily by the size of the defining aperture (b) nonstorage - allowing the scan rate to be varied without changing the signal current amplitude (c) reliable operation over a long period of time - simple rugged construction and lack of thermionic cathode and (d) linear dynamic range of several orders of magnitude.

GENERAL CHARACTERISTICS

Photocathode spectral response (Note 1)	S-1, S-11, or S-20 (see Figure 1)
Focusing Method (Note 2)	Magnetic
Deflection Method (Note 2)	Magnetic
Aperture size limits (Notes 1 and 3)	0.0005 to 1.150 inch
Number of dynodes (Note 4)	12
Internal dynode voltage divider (Note 5)	2.5 megohms per stage Stages 1 through 12

MECHANICAL CHARACTERISTICS

Window material	Corning 7056 or equivalent
Window index of refraction	1.5
Window thickness	0.080 - 0.005 inch
Maximum useful photocathode diameter	3/4 inch
Maximum over-all tube length	6-3/4 inches
Maximum tube diameter	1.0 inch
Weight (approximate)	2.6 ounces
Base	JEDEC No. 8-11 (9 pin Vidicon)
Socket Connections	See Figure 2

RECOMMENDED OPERATING CONDITIONS

Photocathode voltage	-2000 volts
Drift tube voltage	-1700 volts
Dynode No. 1 voltage (Note 6)	-1700 volts
Dynode Nos. 2-11 voltage	(Note 7)
Dynode No. 12 voltage (Note 8)	-140 volts
Guard ring	Ground
Required focus field (Note 7)	40 gauss
Ambient temperature	25° C

ABSOLUTE MAXIMUM RATINGS

Average photocathode current density (Note 9)	10 $\mu a/cm^2$
Peak anode current (Note 10)	8 μa
Ambient temperature	75° C
Over-all voltage	2800 volts
Photocathode to dynode No. 1 voltage	500 volts
Dynode No. 1 to anode voltage	2300 volts
Dynode No. 12 to anode voltage	200 volts

PERFORMANCE CHARACTERISTICS

	Minimum	Typical
Cathode Luminous Sensitivity (Notes 11 and 12)		
S-1	12	20 μa/lumen
S-11	35	50 μa/lumen
S-20	100	120 μa/lumen
Cathode Peak Radiant Sensitivity (Note 9)		
S-1 (8000 Å)	--	0.0022 amps/watt
S-11 (4400 Å)	--	0.032 amps/watt
S-20 (4200 Å)	--	0.043 amps/watt
Current Amplification	5×10^5	2×10^6
Resolution	See Note 13	

NOTES

1. When ordering an F4012, two specifications in addition to the series designation "F4012" are required, namely: (1) the type of spectral response desired, and (2) the dimension of the defining aperture in mils. These two numerical specifications should follow the series designation in brackets as follows:

   EXAMPLE 1: F4012(S1, 2R). This calls for an F4012 image dissector with an S-1 type photocathode and a 0.002 inch diameter round defining aperture.

   EXAMPLE 2: F4012(S11, 1S). This calls for an F4012 image dissector with an S-11 type photocathode and a 0.001 inch by 0.001 inch square aperture.

   EXAMPLE 3: F4012(S20, 4x 100). This calls for an F4012 image dissector with an S-20 type photocathode and a 0.004 inch by 0.100 inch slit shaped rectangular aperture.

2. The F4012 is designed to utilize the standard deflection and focus coil assembly commercially available for vidicons. Custom built coils for

improved resolution and reduced distortion are also available from ITTIL.

3. The F4012 is available with aperture sizes and shapes varying within the dimensional limits of 0.0005 inch and 0.150 inch. Added tooling costs may be involved if specialized sizes or shapes are required.

4. Additional dynodes can be supplied on special orders.

5. Dynodes No. 1 through No. 12 are connected internally by 2.5 megohms, 1/8 watt resistors. These values are adequate for normal signal currents. Modified multipliers are available for applications requiring more than 8 μa anode output current.

6. Dynode No. 1 may be operated either positive or negative with respect to the drift tube potential. At more positive potentials it provides higher first stage gain and decreased multiplier noise ratio, without loss in deflection sensitivity, but at the cost of an increased spurious "background" signal. If slightly more negative than the drift tube potential, dynode No. 1 rejects the spurious background signal, hence gives a better black rendition. Ten to twenty volts are sufficient to accomplish this.

7. ITTIL focus coil F4510 operates at approximately 40 ma. To allow for manufacturing variations in the tube and focus coil, some adjustment should be allowed in either cathode for drift tube potential or focus coil current.

8. In general, lower dynode No. 12 voltages favor increased multiplier gain. The limit in dynode No. 12 voltage reduction is set by linearity requirements at high signal currents.

9. Averaged over any interval not greater than 1 second. S-20 photocathodes should not exceed 1 $\mu a/cm^2$.

10. For a 10 percent maximum departure from linearity of output current versus input flux.

11. With 10^{-2} lumen source of 2870 degrees K color temperature, normal to the plane of the window.

12. At 270 volts dc applied between photocathode and all other elements connected together

13. Practical resolution is a complex function involving the defining aperture, focus coil and deflection coils used in the particular application.

Theoretical resolution at 100 percent modulation is a function of aperture size only and is expressed:

(1) TV lines/inch $\dfrac{1}{\text{aperture width in inches}}$

Amplitude response falls off linearly for a rectangular aperture to 0 percent modulation at the condition:

(2) TV lines/inch $\dfrac{2}{\text{aperture width in inches}}$

The theoretical resolution of a round aperture decreases nearly linearly from the same resolution at 100 percent modulation, to 22 percent modulation at condition 2, above.

Through careful design and construction it has been possible to reduce the aberrations in the image section to 0.0005 inch. When this factor is added to the physical aperture size in the above calculations, it is possible to estimate the actual performance of the tube.

14. Registered JEDEC response curve. All spectral responses are normalized to 100 percent following registered JEDEC recommendations.

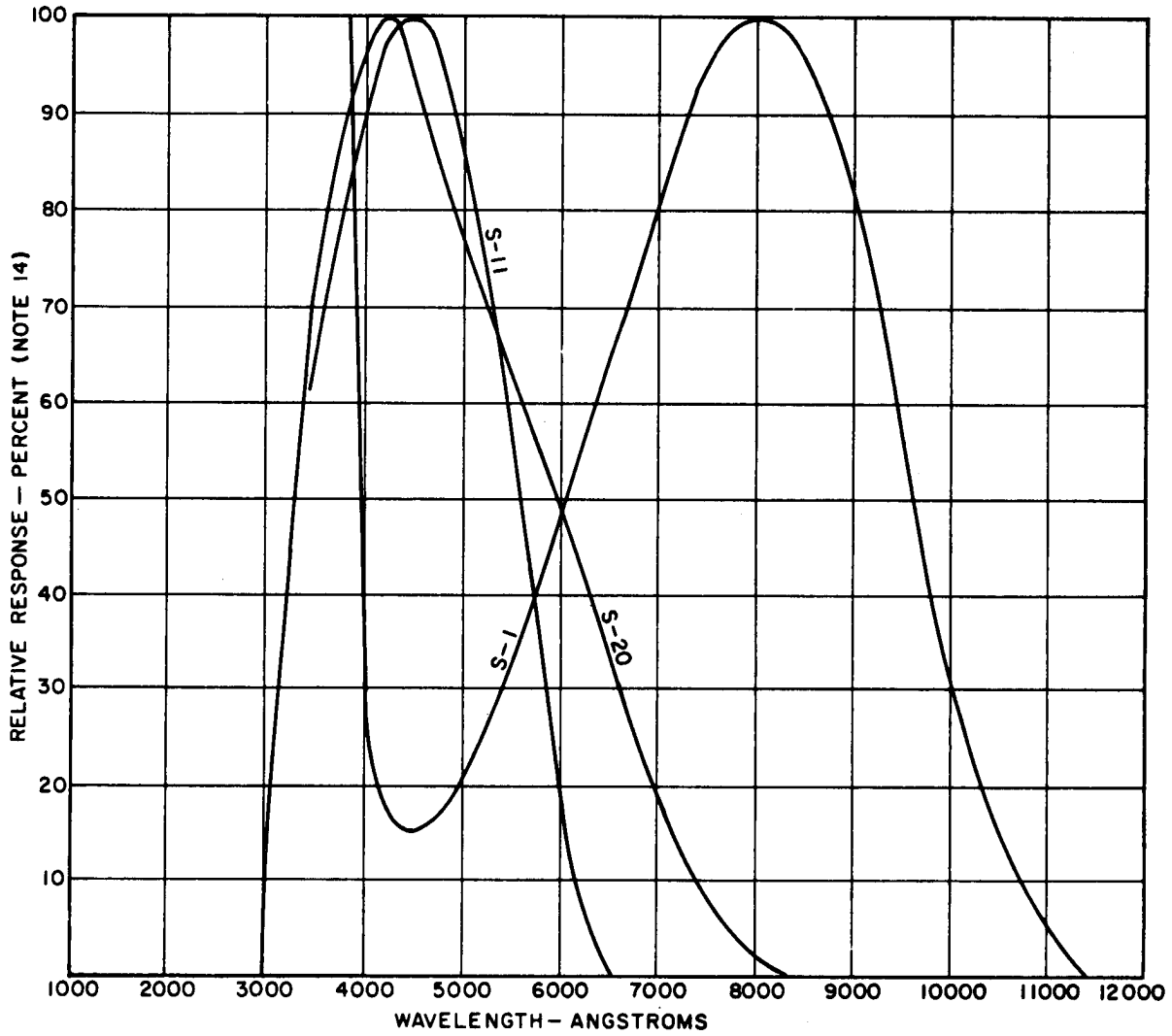

Figure 1 Spectral-Sensitivity Curves

Outline Drawings

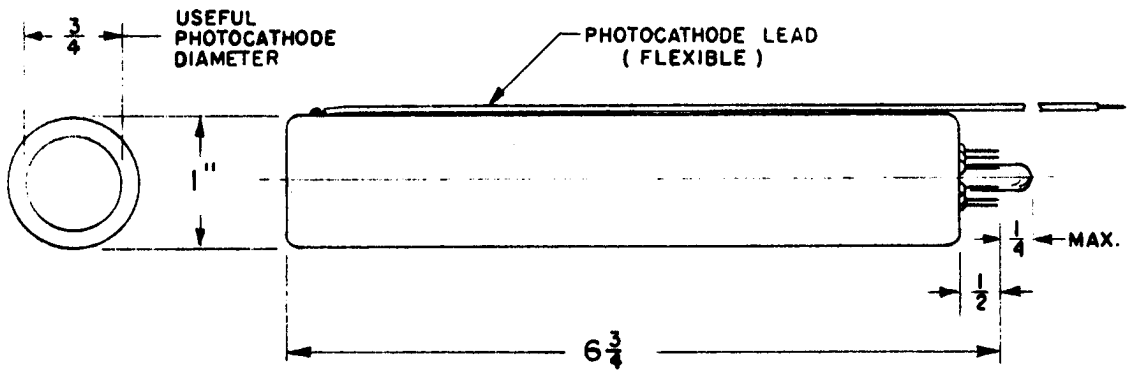

Electrical Schematic

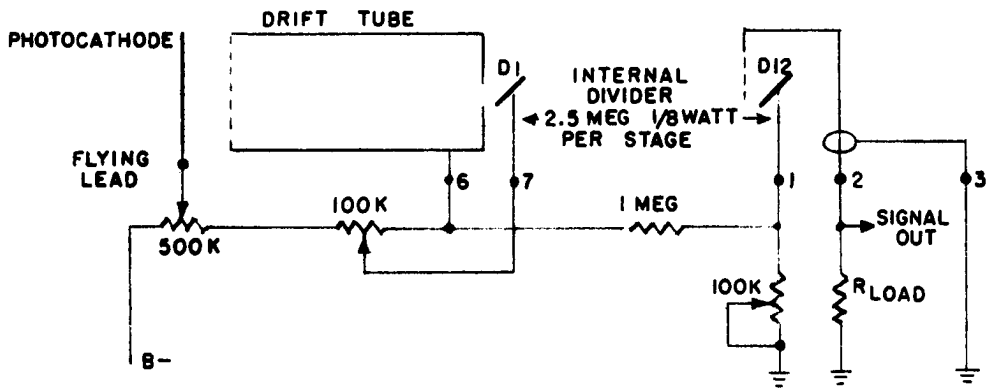

Pin Connections

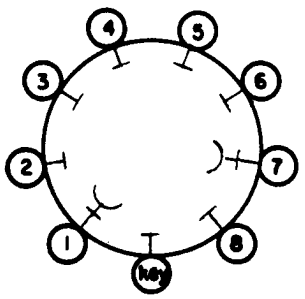

JEDEC NO 8-11
BASE

Pin	Connection
1	Dynode 12
2	Anode
3	Guard Ring
4	Internal Connection
5	Internal Connection
6	Drift Tube
7	Dynode 1
8	Internal Connection
Key Pin	Internal Connection (Short Pin)
Flying Lead	Photocathode

ITT INDUSTRIAL LABORATORIES
FORT WAYNE, INDIANA

1 INCH
DEFLECTION AND FOCUS COIL ASSEMBLIES
FOR F4012 VIDISSECTOR

DEFLECTION YOKE

ITTIL PART NO.	HORIZONTAL COIL			VERTICAL COIL		
	Inductance mh	Resistance ohms	Typ. Defl. Sens. ma/in.	Inductance mh	Resistance ohms	Typ. Defl. Sens. ma/in.
F4509	42	180	55	50	200	55

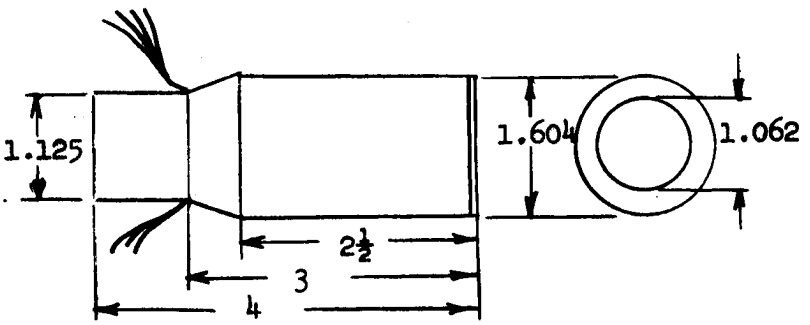

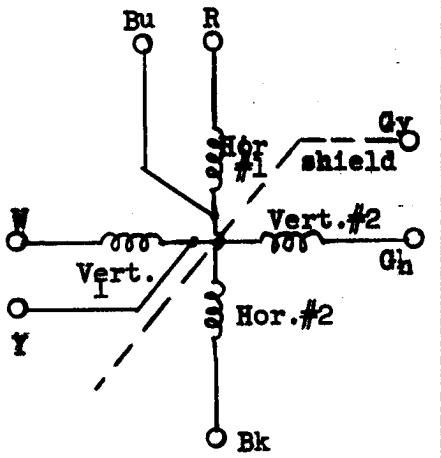

FOCUS COIL

ITTIL PART NO.	RESISTANCE ohms	TYPICAL CURRENT ma
F4510	670	30

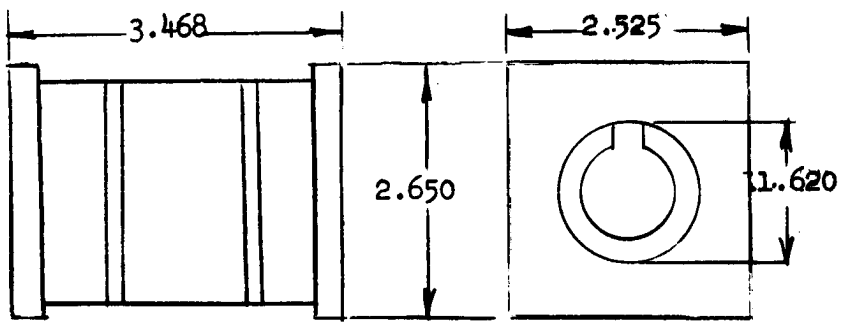

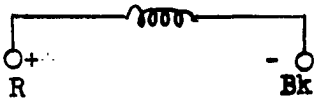

10-26-64

TENTATIVE DATA

MULTIPLIER PHOTOTUBE

Type F4027

GENERAL DESCRIPTION

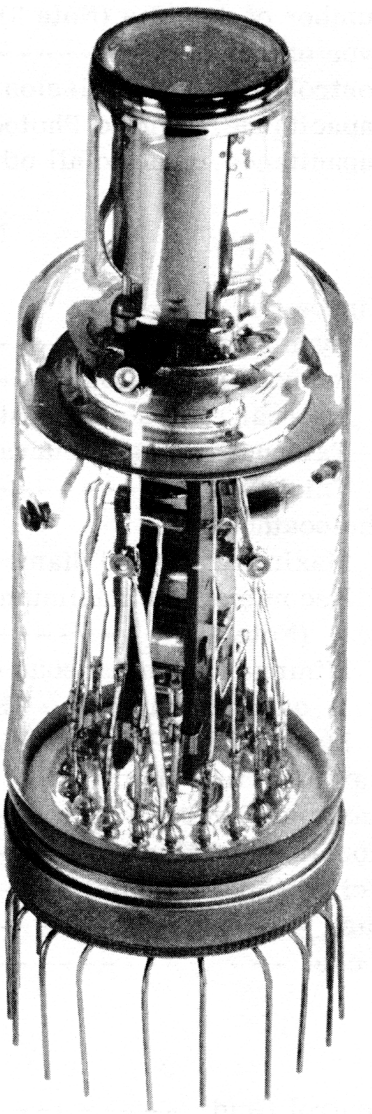

The F4027 model number refers to a series of special purpose grid controlled multiplier phototubes available with S-1, S-11, or S-20 type photocathodes. Included in the electrostatically focused image section is a high transmission mesh grid in close proximity to the photocathode surface. This grid electrically controls the number of photoelectrons emitted from the photocathode. Typical grid control characteristics are shown in Figure 3.

A defining aperture is incorporated between the photocathode and the first dynode of a 16-stage electron multiplier. It is possible to custom select the defining aperture size and shape such that the effective photocathode area conforms to the input flux area to be detected. This area-matching feature affords maximum suppression of dark noise from unused photocathode areas while at the same time yielding superior capability for detecting photoelectrons from the selected cathode area. With the addition of an external magnetic deflection coil, surrounding the image section of the tube, the effective photocathode area can be deflected to various locations on the formed photocathode surface.

Other special purpose multiplier phototubes available from ITTIL include the FW-118, FW-129, FW-130, FW-142, FW-143, FW-136, F4003 series, F4004 series, F4008 series, F4030 series, as well as many other developmental types.

APPLICATION

The special properties and characteristics of the F4027 make it well suited to such applications as electron energy selection, heterodyne detection, solar exposure protection, non-linear operation, fast gating, and high Gm/I amplification.

GENERAL CHARACTERISTICS

Photocathode response (Note 1)	S-1, S-11, or S-20 (See Figure 1)
Focusing method	Electrostatic
Deflection method (Note 2)	Magnetic, optional
Number of dynodes (Note 3)	16
Type of dynodes	Box and grid
Control Grid Transmission	80 Percent
Capacitance, Grid to Photocathode	12 $\mu\mu$f
Capacitance, Grid to all other electrodes	22 $\mu\mu$f

MECHANICAL SPECIFICATIONS

Window	
Type of glass	Corning 7056 or equivalent
Index of refraction	1.5
Internal radius of curvature	Nominally flat
External radius of curvature	Nominally flat
Thickness	0.080 inch
Photocathode	
Maximum formed diameter	0.75 inch
Recommended maximum usable diameter (Note 4)	0.250
Minimum instantaneous effective photocathode diameter - IEPD (Notes 5 & 6)	0.005 inch
Maximum IEPD (Notes 5 & 7)	0.25 x 0.2 inch
Maximum tube diameter	2.0 inches
Maximum over-all tube length	6.0 inches
Mounting position	any
Weight (Approximate)	2-1/4 ounces
Base	The tube is normally supplied with
Socket	stiff flying leads (as shown in photograph). JEDEC No. B-20-102 20 pin base and associated socket are also available on request.
Control Grid	Flying lead, green

TYPICAL OPERATING CONDITIONS

Over-all voltage	1800 volts
Recommended voltage distribution	See Figure 2
Ambient temperature	25° C
IEPD	0.100 inch

TENTATIVE PERFORMANCE CHARACTERISTICS

For typical operating conditions. (Note 8)

TUBE TYPE (Notes 1 and 9)	F4027 (S1, 100R)	F4027 (S11, 100R)	F4027 (S20, 100R)
Cathode luminous sensitivity (μa/lumen)			
Minimum	12	30	80
Median	20	40	100
Cathode peak radiant sensitivity (amperes/watt)			
Median	0.0022	0.032	0.043
Wavelength at maximum response (Å)			
Minimum	7000	3900	3700
Median	8000	4400	4200
Maximum	9000	4900	4700
Anode luminous sensitivity (amperes/lumen)			
Minimum	50	50	50
Median	200	200	200
Maximum (Note 13)	1000	1000	1000
Anode dark current (amperes)			
Median	3×10^{-6}	10^{-10}	10^{-10}
Maximum	2×10^{-5}	10^{-9}	10^{-9}
Luminous equivalent of anode dark current (lumens) (Note 10)			
Median	1.5×10^{-8}	10^{-12}	10^{-12}
Maximum	5×10^{-8}	10^{-11}	10^{-11}
Equivalent noise input - ENI (lumens) (Note 11)			
Median	3×10^{-11}	5×10^{-13}	5×10^{-13}
Maximum	1×10^{-10}	1×10^{-12}	1×10^{-12}
Current amplification			
Minimum	5×10^{5}	5×10^{5}	5×10^{5}
Median	5×10^{6}	5×10^{6}	5×10^{6}

MAXIMUM RATINGS

Absolute Maximum Values

Average photocathode current density	1.0 $\mu a/cm^2$
Average anode current	0.3 ma
Peak anode current	0.5 ma
Ambient temperature	75° C
Over-all voltage (dc or peak ac)	2250 volts

NOTES

1. When ordering an F4027, two specifications in addition to the series designation "F4027" are required, namely: (1) the type of spectral response desired, and (2) the dimension of the defining aperture in mils, referred to the photocathode. These two numerical specifications should follow the series designation in brackets as follows:

   EXAMPLE 1: An F4027 (S1, 2R). This calls for an F4027 multiplier phototube with an S-1 type photocathode and a 0.002 inch diameter round effective photocathode diameter.

   EXAMPLE 2: An F4027 (S11, 1S). This calls for an F4027 multiplier phototube with an S-11 type photocathode and a 0.001 inch by 0.001 inch square effective photocathode area.

   EXAMPLE 3: An F4027 (S20, 4 x 100). This calls for an F4027 multiplier phototube with an S-20 type photocathode and a 0.004 inch by 0.100 inch slit shaped effective photocathode area.

2. A suitable deflection coil unit (FW-315) is available from ITTIL. The F4027 can be operated without coils if paraxial operation only is desired.

3. For reduced gain, fewer dynodes may be used.

4. For reasons of nonuniformity and image distortion, ITTIL recommends that deflection of the small instantaneous photocathode area be confined within the area given by this dimension.

NOTES (Cont)

5. The term "IEPD" refers to the small instantaneous effective photocathode dimension established by an internal defining aperture. Dimensions in all cases are referred to the photocathode with no deflection applied and with the focus electrode voltage adjusted for optimum focus.

6. Effective photocathode sizes less than 0.005 inch in diameter are available but may result in a reduction of the effective photocathode sensitivity.

7. Defining apertures of various sizes and shapes can be supplied within this maximum size restriction at the photocathode.

8. Parameters utilized follow the recommendations of IRE Publication No. 62IRE 7.S1: "Methods of Testing, 1962".

9. Performance data is given in terms of tubes with 0.100 inch diameter round apertures.

10. Anode dark current divided by anode luminous sensitivity. This parameter cannot be used to predict dark noise behavior in tubes with S-11 or S-20 type photocathodes since the dark current in these tubes is not normally due to cathode dark emission current.

11. The tube dark noise in F4027 tubes with S-11 or S-20 type photocathodes is normally so low that no reliable dark noise measurements can be made using the recommended techniques of Note 8. Tube dark noise in these tubes may be such that the typical ENI is several orders of magnitude below the stated maximum rated value.

12. Registered JEDEC response curve. All spectral responses are normalized to 100 percent following registered JEDEC recommendations. Permissible tolerances on these various registered S-response curves have been or are being established by JEDEC.

13. A maximum sensitivity rating is given for replacement tube matching purposes.

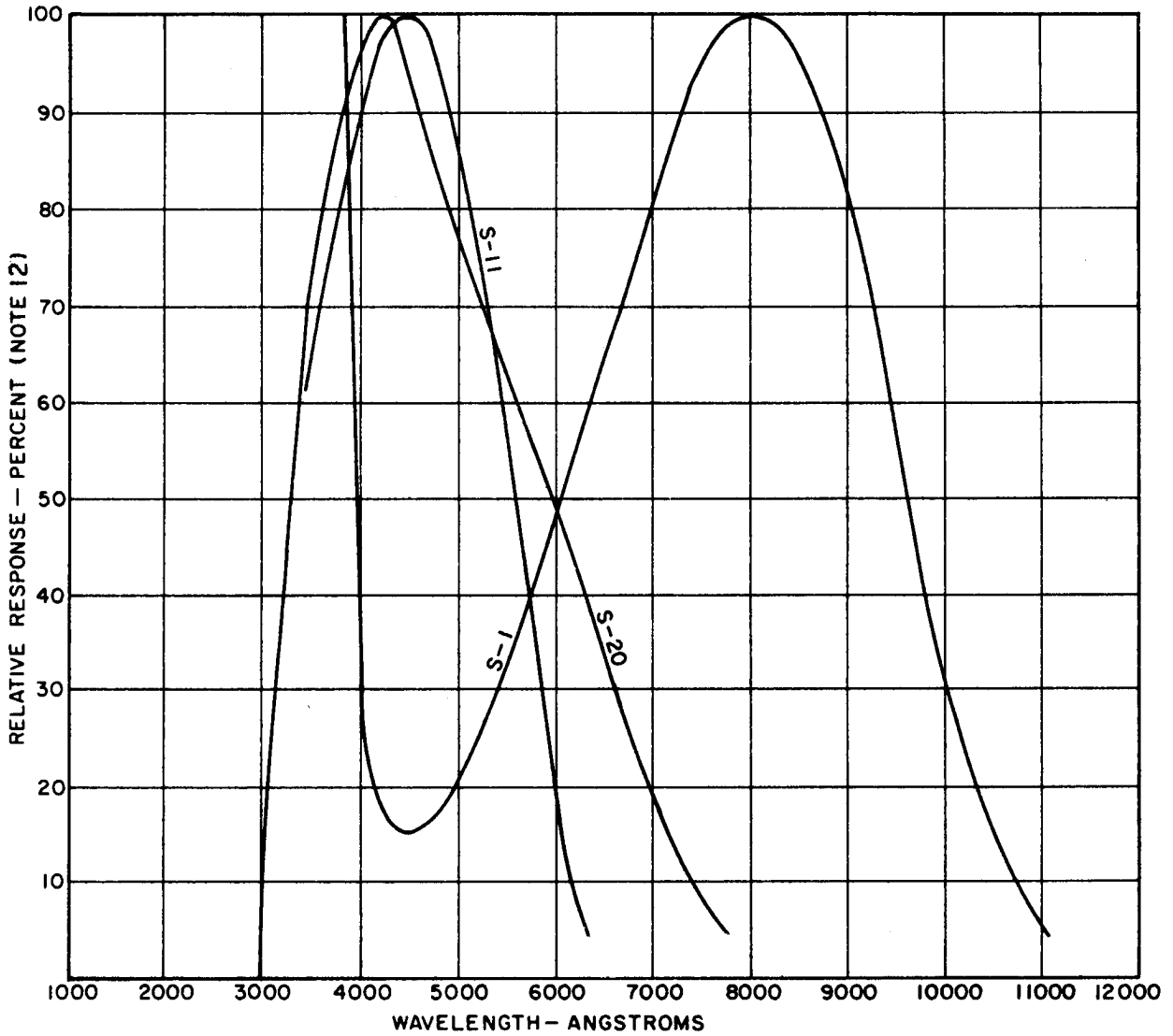

Figure 1 Spectral-Sensitivity Curves

RECOMMENDED WIRING DIAGRAM FOR GRID CONTROLLED MULTIPLIER PHOTOTUBE F4027

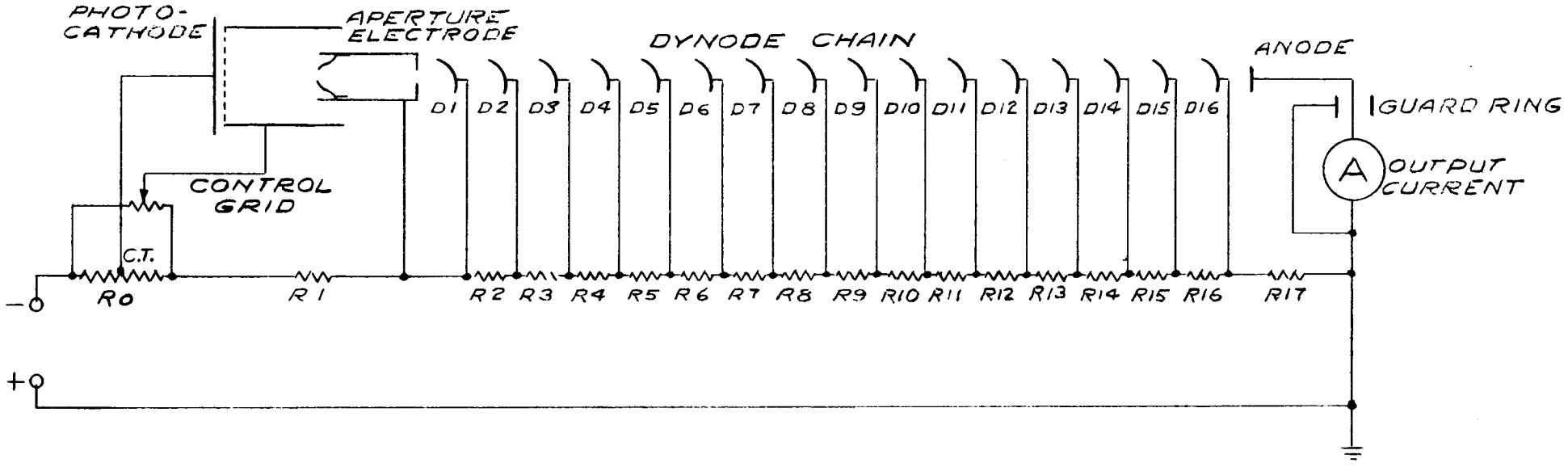

RESISTORS R2 THRU R15 INCLUSIVE HAVE EQUAL VALUE.

" R0 = .4 X R2 OHMS (C.T.)

" R1 = 2 X R2 "

" R16 = 1.5 X R2 "

" R17 = 3 X R2 "

NOTES:

14. CURRENT THROUGH VOLTAGE DIVIDER SHOULD EQUAL OR EXCEED 8 X THE VALUE OF THE MAXIMUM OUTPUT CURRENT FOR OPTIMUM STABILITY.

15. POWER SUPPLY SHOULD BE OF REGULATED TYPE.

16. FOR MINIMUM NOISE, MULTIPLE SHIELDING IS RECOMMENDED, WITH THE INNER SHIELD OPERATED AT PHOTOCATHODE POTENTIAL.

Figure 2

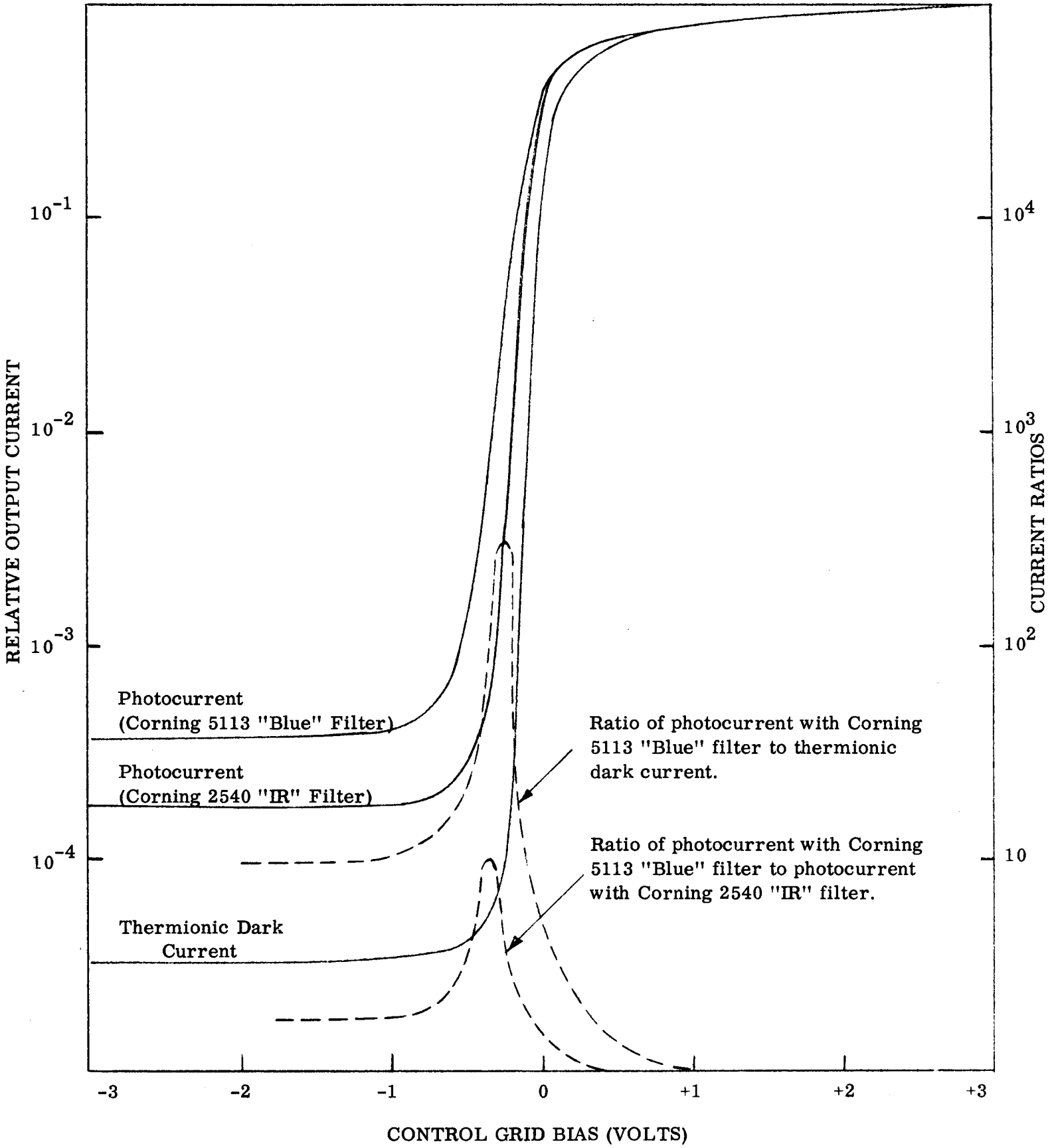

Figure 3. Typical Grid Control Characteristics

OUTLINE DRAWING

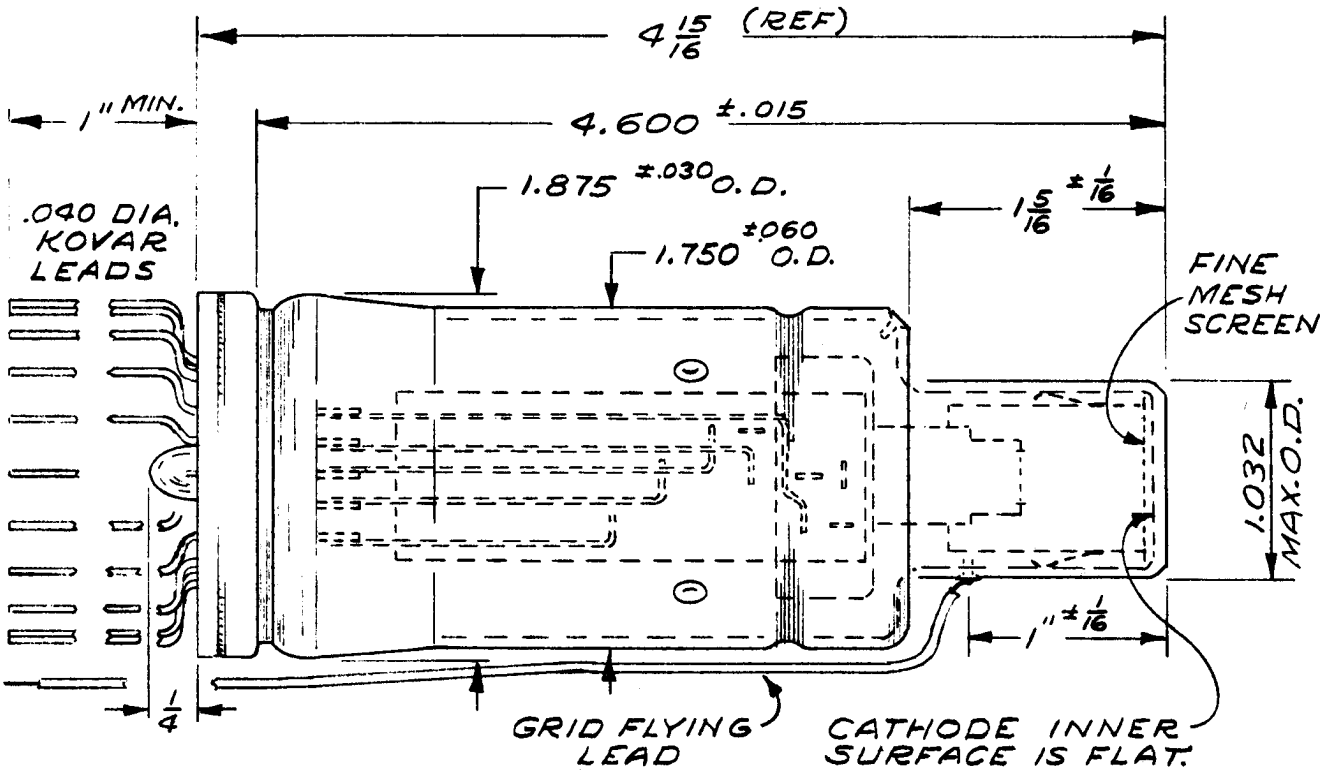

STEM CONNECTIONS

Pin	1	Key Pin (Clipped)
	2	Cathode
	3	Dynode 1
	4	Dynode 3
	5	Dynode 5
	6	Dynode 7
	7	Dynode 9
	8	Dynode 11
	9	Dynode 13
	10	Dynode 15
	11	Anode, Multiplier
	12	Dynode 16
	13	Dynode 14
	14	Dynode 12
	15	Dynode 10
	16	Dynode 8
	17	Dynode 6
	18	Dynode 4
	19	Dynode 2
	20	Anode, Image Sect.

NOTE

17. Green lead connected to control grid.

18. White lead soldered to weld ring and connected internally to the anode guard ring. It should be connected to the positive end of the voltage divider.

F 4511

DEFLECTION AND FOCUS COIL ASSEMBLY FOR IMAGE DISSECTOR

APPLICABLE TUBE TYPES: FW122, FW125, FW146, F4010

DIMENSIONS:

Length	14.5 inch (add 0.25 inch for terminals)
Inside diameter	4.75 inches
Outside diameter	6.75 inches
Weight	16.75 pounds

ELECTRICAL SPECIFICATIONS:

A coil assembly may be any combination of the types listed. Other designs are available on special order. (Note 3)

Deflection coils (specify type for inner and outer coils) (Note 3)

Type	Inductance @ 1 KC mh	Resistance ohms	Deflection Sensitivity (Note 1) Amps/inch	Resonant Frequency KC	Max. DC Current Amperes
A	36	400.	0.050	50	1
B	10	120.	0.250	500	1
C	2.75	25.	0.160	750	4
D	.340	1.15	0.6		6
E	.081	0.58	1.2		6
F	.020	0.30	1.8	7MC	6

Focus Coils (Specify type for static and dynamic focus) (Note 3)

Static			Dynamic		
Type	Resistance ohms	Current (Note 2) Amperes	Type	Resistance ohms	Inductance @ 1 KC mh
A	2900	.056	A	256	169
B	105	.145	B	19	13
C	75	.130	C	6.7	4.25
D	66	.150			
E	42	.150			

10-26-64

F 4511

NOTES:

1. Image Section voltage (PC to D1) = 600V

2. At First Focus

3. Example: F 4511 CBDB

   First Letter - inner deflection coil: C(2.75 mh)
   Second Letter - outer deflection coil: B(10 mh)
   Third Letter - static focus coil: D(66 ohms)
   Fourth Letter - dynamic focus coil: B(19 ohms)

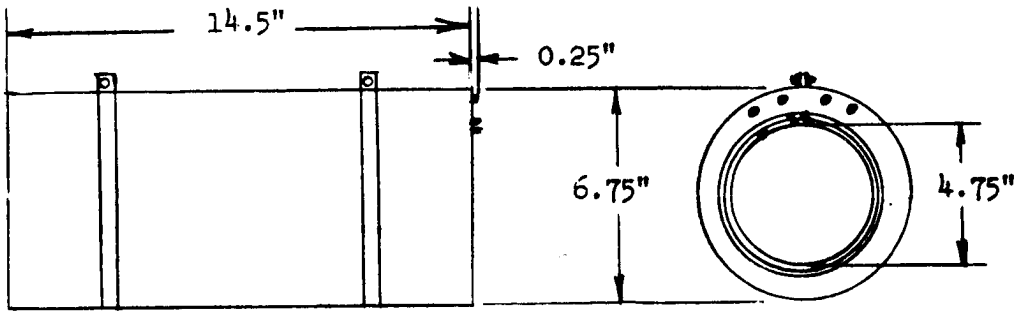

DIMENSIONS

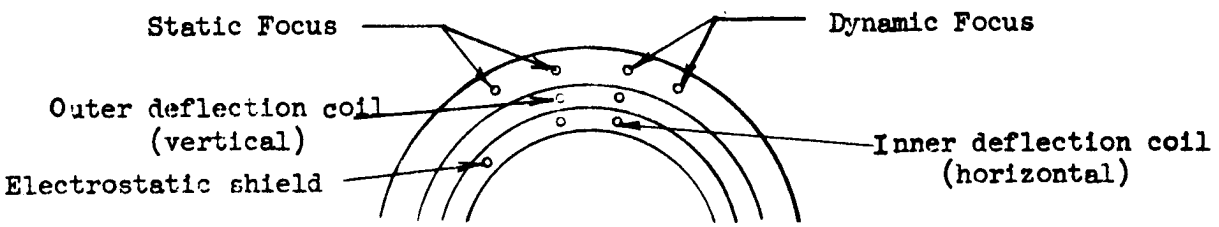

TERMINAL LOCATION

10-26-64

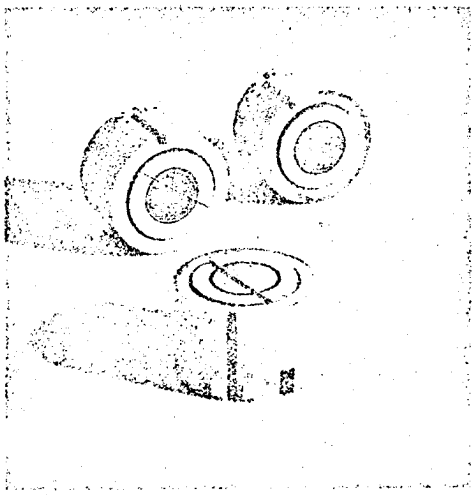

Image Intensifiers

18mm Microchannel Wafers

ITT Type Number	Input Window Fiberoptic Configuration	Spectral Response
F-4704	Trifocal	S-25
F-4747	Plane Focus	S-25
F-4748	Bifocal	S-25

ITT's 18mm microchannel wafers are single stage, high gain image intensifiers used for image pick-up applications under low light or infrared ambient light conditions.

The wafers consist of a high efficiency S-25 photocathode deposited on a fiberoptic input window, a microchannel plate (MCP) current amplifier and a green P-20 phosphor screen fabricated on the twisted fiberoptic output window. Low light level or infrared images focused on the fiberoptic input window of the wafer are converted to electron images by the photocathode. The wafer's microchannel plate, consisting of several million microscopic glass channels, amplifies the electron image with virtually no distortion and loss of resolution. By twisting the fiberoptics on the output window, the need for a corrective lens to invert the viewed image is eliminated.

ITT's 18mm microchannel wafer image intensifiers are completely self-contained with an integral high voltage power supply. The power supply incorporates Automatic Brightness Control (ABC) for uniform image output and bright source protection for photocathode protection during exposure to high light levels. All high voltage is contained internally and the unit may be powered by a low current 2.7 volt battery (P. R. Mallory, Model 303843 or equivalent).

Major advantages of ITT microchannel plate image intensifiers are size and individual point saturation. The small size makes these devices particularly applicable where size is a primary factor, as in head mounted night vision goggles. These intensifiers offer very effective operation under high point light conditions such as flares, spotlights and tracers. This is due to the special saturation characteristics of the individual glass channels in the MCP. Operational recovery of these devices after exposure to high light levels is instantaneous.

For engineering and applications assistance contact ITT Electron Tube Division, 7635 Plantation Road, Roanoke, Virginia 24019. Telephone (703) 366-7601.

eatures

- Miniature size
- Point light source saturation
- Instantaneous recovery from high light exposure
- Minimum image halo
- Automatic Brightness Control
- Bright Source Protection
- Image Inversion
- Ruggedized Construction
- Low Voltage Pulse Capability

Optional Features

- Pulsed Operation
- Phosphors other than P-20
- Non-inverted Output Optics

U.K. technical and sales enquiries should be directed to :

ITT Components Group Europe
Valve Product Division
Standard Telephone and Cables Ltd
Brixham Road, Paignton Devon

Telephone : Paignton 50762 (STD 0803-). Telex 42830

ELECTRON TUBE DIVISION ITT

F-4704, F-4747, F-4748

PERFORMANCE

Photocathode	
Entrance Window	
F-4747	Plane Surface, Fiberoptics
F-4748	Bifocal, Fiberoptics
F-4704	Trifocal, Fiberoptics
Cathode Type	S-25
Photocathode Sensitivity (2870°K)	175 to 400 uA/Lumen
Radiant Sensitivity	
.80 microns	.010 to .030 amperes/watt
.83 microns	.006 to .025 amperes/watt
.85 microns	.003 to .015 amperes/watt
Fluorescent Screen	
Exit Window*	Curved surface (radius 1.575") fiberoptics
Response Characteristic	P-20 Type, Aluminized
Luminous Gain (Input 2×10^{-6} ft. C)	5000 to 15000 adjustable
Equivalent Background Input	2×10^{-11} lumens per cm^2
Luminous Uniformity	4:1 maximum
Magnification	1.00±.005
Resolution	22 to 28 line pairs per mm
Modulation Transfer	(See Figure 2)
Saturation Characteristics	(See Figure 1)

MECHANICAL AND ELECTRICAL CHARACTERISTICS

Operating Input Voltage	2.5 Volts
Operational Range	2.0 to 2.7 volts
Weight	105 grams maximum
Operating Position	Any
Dimensions	See outlines

ENVIRONMENTAL

Temperature Range (Storage)	+52°C to −62°C
Temperature Range (Operating)	+52°C to −54°C
Temperature Shock (Allowable)	12 degrees per minute
Vibration	10 to 55 cycles, .10" displacement
Shock	85 G's peak amplitude

LIFE AND HIGH LIGHT PROTECTION

Life (In goggles, Scene Illumination, 10^{-4} ft. C)	1000 hours
Life (Direct Cathode illumination, 10^{-6} ft. C)	2000 to 10,000 hours
Room Lighting, short periods	No damage
Point Light Source**, short periods	No damage

PULSE OPERATION (Special models or without power supply)

The standard intensifier with power supply is for continuous operation, but special models are available for pulse mode. The device is readily adaptable to pulse operation, having a low gating voltage and a high input impedance. The gain may also be controlled to some degree by varying the input pulse height (Figure 3). Repetition rates up to 1000 cycles/sec. are standard; higher rates have not been tested.

On Pulse Voltage (Cathode to MCP)	100 to 300 volts (Optional)
Cutoff Voltage (Cathode to MCP)	−30 volts (minimum)
Input capacitance	30 picofarads (nominal)

*Output optic may be ground flat or to other radii. **Auto lights, flares, tracers, spotlights, etc.

USEFUL VIEWING AREA

F-4747 SINGLE FOCAL

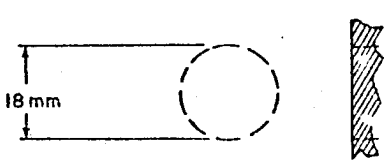

F-4748 BIFOCAL

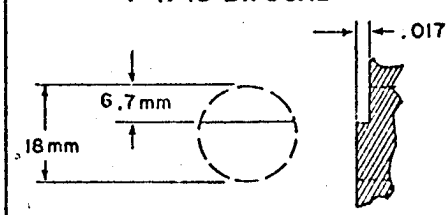

THE RECESSED AREA IS 1/3 THE TOTAL AREA.

F-4704 TRIFOCAL

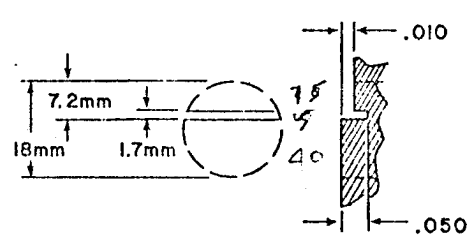

F-4747 SINGLE FOCAL 18mm MICROCHANNEL IMAGE INTENSIFIER

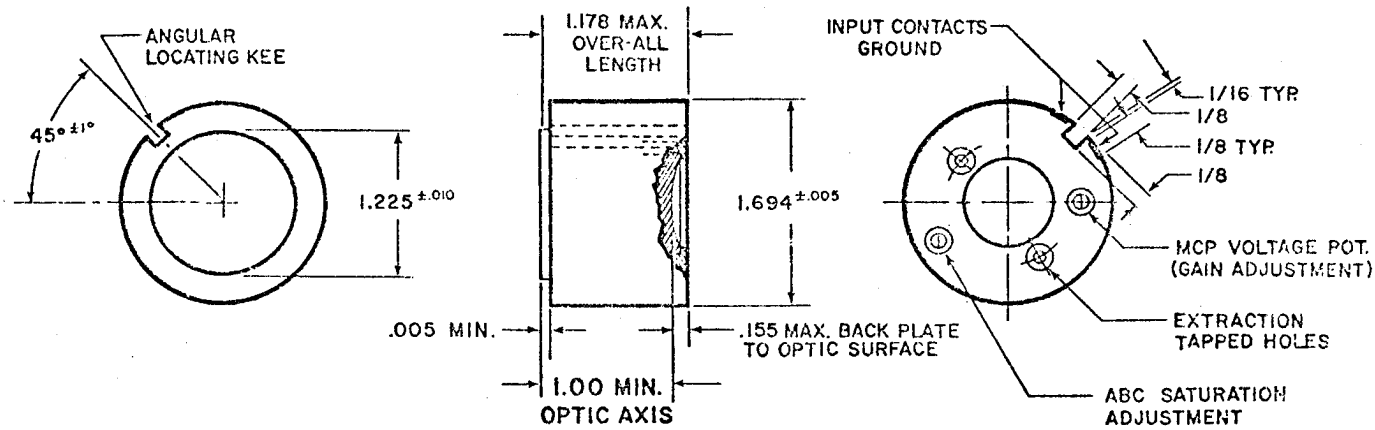

F-4748 BIFOCAL 18mm MICROCHANNEL IMAGE INTENSIFIER

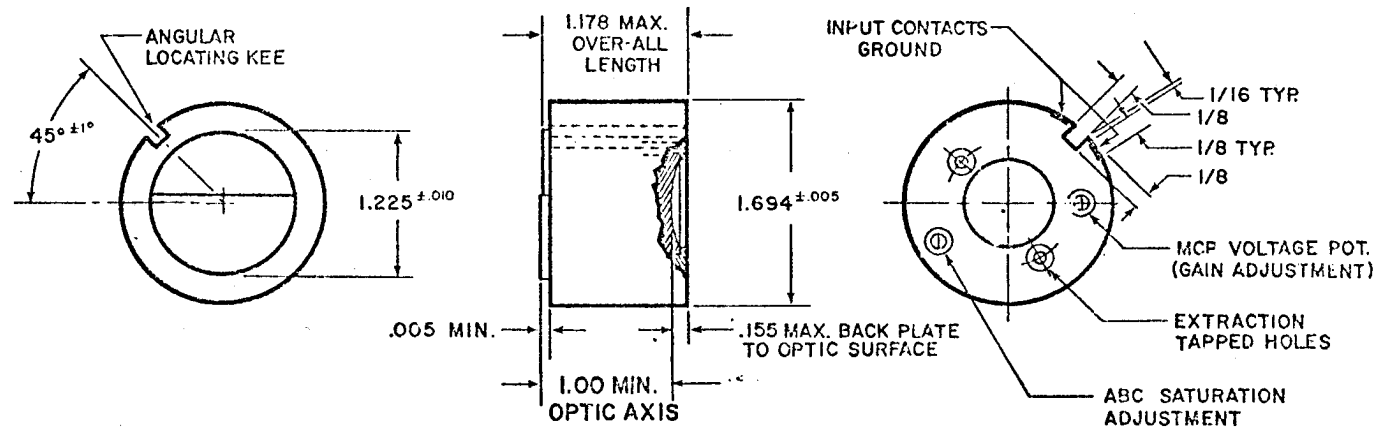

F-4704 TRIFOCAL 18mm MICROCHANNEL IMAGE INTENSIFIER

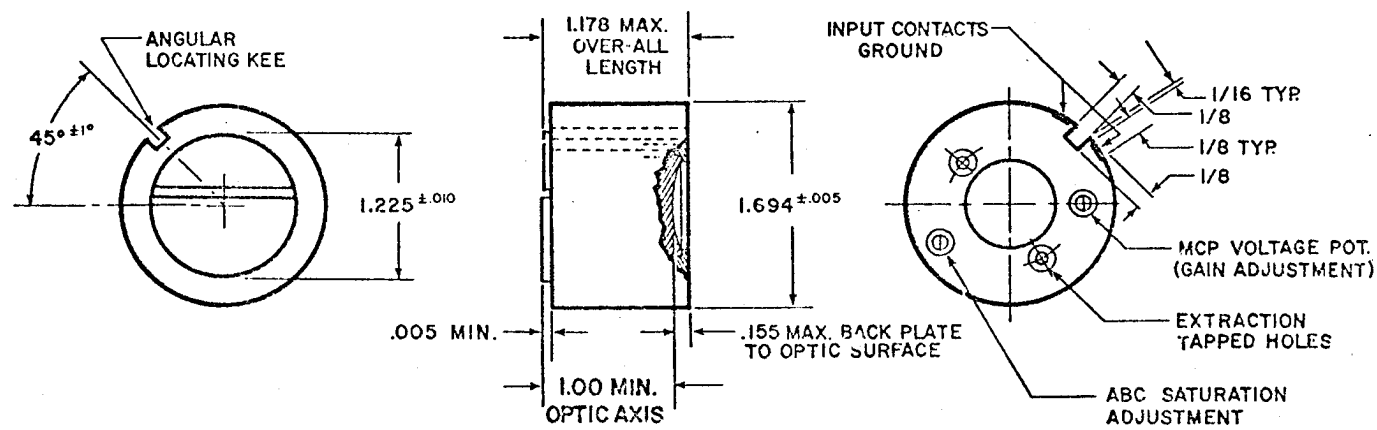

FIGURE 1
TYPICAL
SATURATION CURVE

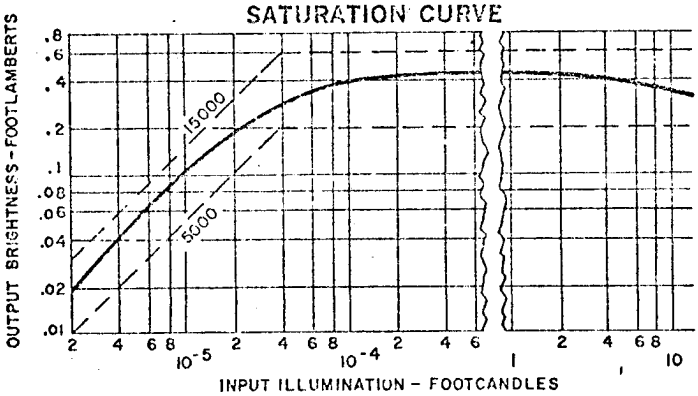

FIGURE 2
TYPICAL
MODULATION TRANSFER
FUNCTION

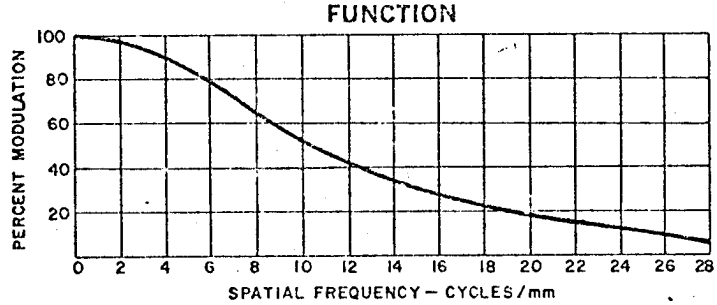

FIGURE 3
TYPICAL GAIN FOR INPUT PULSE
HEIGHT OR D.C. INPUT VOLTAGE
CATHODE TO MCP

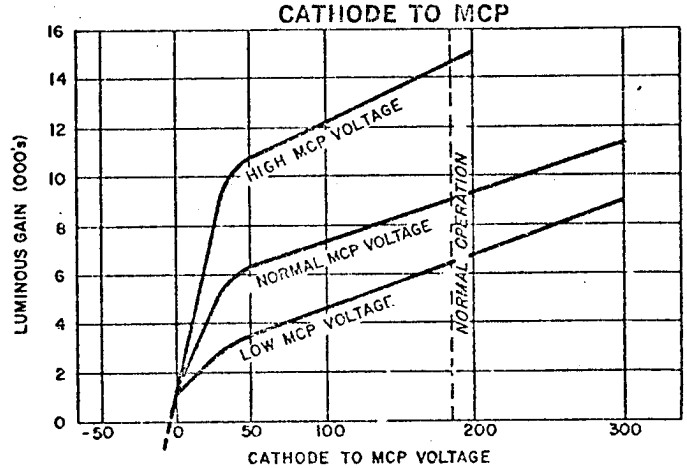

FIGURE 4
TYPICAL GAIN FOR VOLTAGE
ACROSS MCP (MICROCHANNEL PLATE)

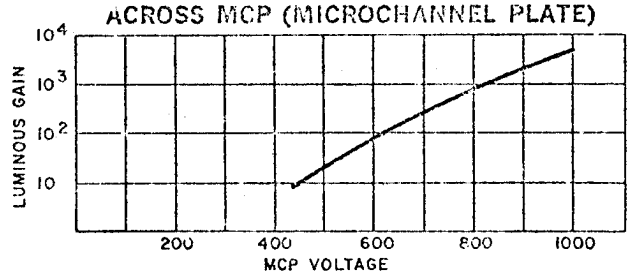

ELECTRON TUBE DIVISION
Box 100, Easton, Pennsylvania 18042 Telephone (215) 252-7331

ELECTRON TUBE DIVISION
P.O. Box 100
Easton, Pennsylvania 18042
Telephone 215 252-7331

F-4736

U.K. technical and sales enquiries should be directed to :
ITT Components Group Europe
Valve Product Division
Standard Telephone and Cables Ltd
Brixham Road, Paignton Devon
Telephone : Paignton 50762 (STD 0803-). Telex 42830

The F-4736 is an electrostatically focused, high resolution, magnifying image intensifier. The flat, 25mm useful diameter fiberoptic input window is ideally suited for efficient coupling to other fiberoptic tubes or fiberoptic cables. The 125mm useful diameter, glass output window may be viewed directly or optically enlarged without the viewing restrictions of conventional optical magnifiers.

The cathode has an S-20 spectral response processed for high green gain to best match the output of other image intensifiers. The high resolution modified P-20 output screen has a spectral output closely matched to the human eye.

The F-4736 is a triode with a nominal focusing voltage of 2% of anode potential which is typically 20KV. The electron optics are such that, at optimum focus, a typical tube has a resolution on axis of 120 lp/mm. The resolution at the edge is over 100 lp/mm and with a minor focus shift, the resolution can be equalized to over 110 lp/mm across the full input field.

GENERAL INFORMATION

Input fiber	
Useful diameter	25mm
Flatness	0.5μ
Numerical Aperture (Nominal)	1.0
Output window	
Shape	flat
Useful diameter	125mm
Photocathode	S-20
Image Section	
Configuration	Triode
Focusing voltage, Nominal	+400 volts
Anode voltage (cathode ground)	+20 KV
Phosphor	Modified P-20
Overall length	13.63 in.
Outside Diameter	7.20 in.
Weight	3.2 lbs.

PERFORMANCE DATA

	Typ.	Min.	Units
Brightness Gain			
2870 K light	6	4	fL/fc
Green Filter (Corning 4-64)	3	2.5	fL/fc
Limiting Resolution at input			
Center	120	110	lp/mm
12mm off axis	110	100	lp/mm
Equivalent Background input	1×10^{-10}	1×10^{-9} max	lum/cm^2
Distortion			
60% diameter	2	-	%
90% diameter	7	8max	%
Contrast	88	85	%
Brightness uniformity (80% diameter)	±20	±30 (max)	%

*All measurements made at 20KV operating voltage

F-4736

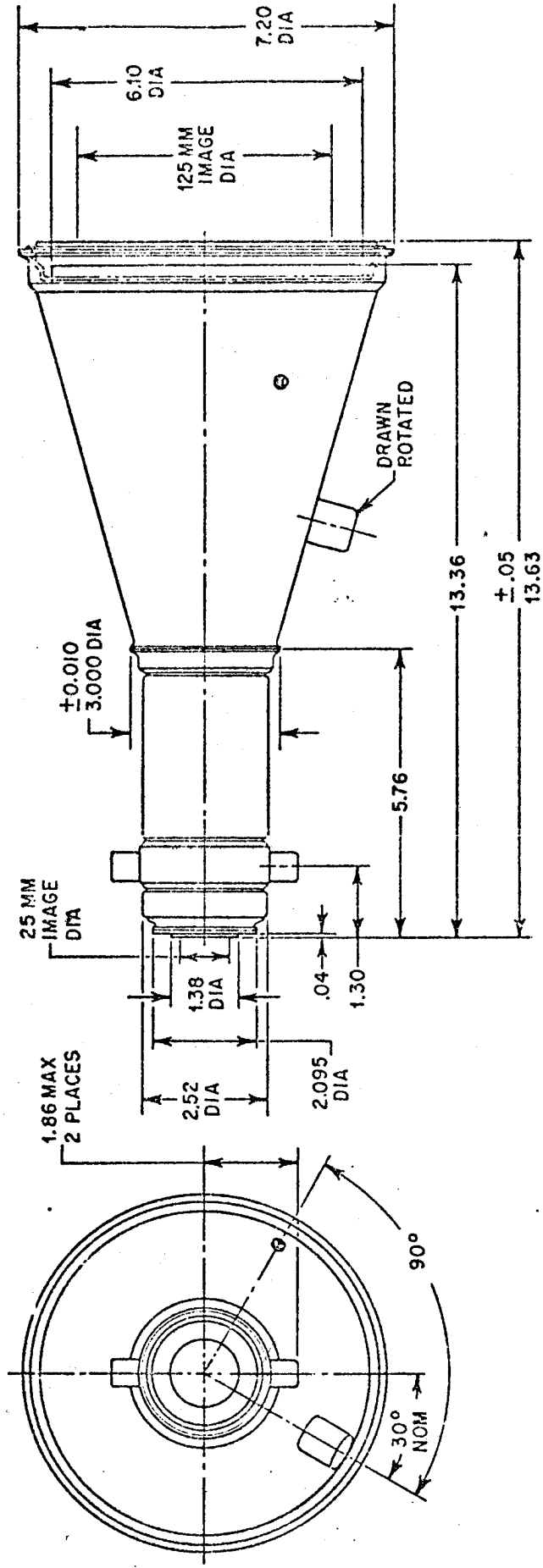

NOTES: Unless otherwise specified dimensions are in inches

Tolerances

Decimals .XX ±.02

.XXX ±.005

Angular ±1°

ELECTRON TUBE DIVISION

P.O. Box 100 Easton, Pennsylvania 18042

FEDERAL POWER TRIODE
Type F-5604
10 Kilowatts Plate Dissipation

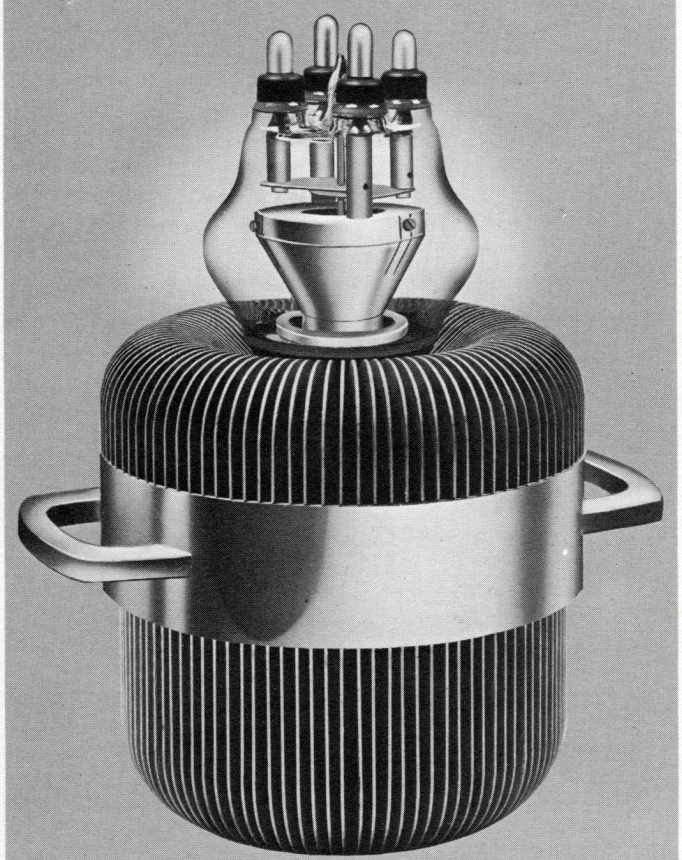

GENERAL DATA

DESCRIPTION:

Federal's Type F-5604 is a three-electrode tube designed for use as a radio-frequency amplifier, oscillator, or Class B modulator. It is ruggedly constructed to meet the severe conditions of radio-frequency heating service. The heavy wall anode is forced-air cooled, capable of dissipating 10 kilowatts. The cathode is a pure tungsten filament. Maximum ratings apply up to 22.5 megacycles. Operation at 45 megacycles is permissible with plate voltage and input reduced to one-half maximum ratings.

Electrical:

Filament Voltage	11.0 Volts
Filament Current	176 Amperes
Filament Starting Current	270 Amperes max.
Peak Cathode Current	12.4 Amperes
Filament Cold Resistance	.0052 Ohms
Amplification Factor, I_b=1.25 Amp.; E_c=—100 Volts	19.5
Interelectrode Capacitances	
Grid-Plate	25 $\mu\mu$f
Grid-Filament	30 $\mu\mu$f
Plate-Filament	1.25 $\mu\mu$f

Mechanical:

Mounting Position—Vertical, Anode Down			
Type of Cooling—Forced Air			
Maximum Incoming Air Temperature			45° C
Required Air Flow on Anode			
Plate Dissipation—Kilowatts	10	8	6
Air Flow—CFM	750	525	350
Static Pressure—Inches Water	2	1	0.45
Maximum Anode Temperature			230° C
Required Air Flow on Bulb*			50 CFM
Maximum Glass Temperature			160° C
Net Weight, approx.			45 Pounds

*Operation at frequencies above 15 Mc/sec. may require air-flow on the dish center in order to hold the temperature of the seals and dish below 160° C. This flow may be obtained by deflection of the anode cooling air, or by means of a separate blower supplying 50 C.F.M. through a 3" nozzle.

Copyright 1954, Federal Telephone and Radio Company

FEDERAL POWER TRIODE
Type F-5604
10 Kilowatts Plate Dissipation

Federal tubes have always been known for their *plus values*: an extra rugged construction, a longer life of service.

Maximum Ratings and Typical Operating Conditions

AUDIO-FREQUENCY POWER AMPLIFIER AND MODULATOR—CLASS B

Maximum Ratings

DC Plate Voltage	12,500 Volts
Max. Signal DC Plate Current**	2.75 Amperes
Max. Signal Plate Input**	32.5 Kilowatts
Plate Dissipation**	10 Kilowatts

Typical Operation

(Unless otherwise specified, values are for 2 tubes)

D C Plate Voltage	12,000 Volts
DC Grid Voltage	—600 Volts
Peak A-F Grid to Grid Voltage	2,380 Volts
Zero Signal DC Plate Current	0.6 Amperes
Maximum Signal DC Plate Current	4.5 Amperes
Effective Load Resistance (plate to plate)	5,900 Ohms
Maximum Signal Driving Power, approx.	160 Watts
Maximum Signal Power Output, approx.	36 Kilowatts

**Averaged over any audio-frequency cycle of a sine-wave form.

RADIO-FREQUENCY POWER AMPLIFIER —CLASS B TELEPHONY

(Carrier conditions per tube for use with a maximum modulation factor of 1.0)

Maximum Ratings

DC Plate Voltage	12,500 Volts
DC Plate Current	1.4 Amperes
Plate Input	16 Kilowatts
Plate Dissipation	10 Kilowatts

Typical Operation

DC Plate Voltage	10,000 Volts
DC Grid Voltage	—500 Volts
Peak R-F Grid Voltage	490 Volts
DC Plate Current	0.8 Ampere
Driving Power, approx.†	70 Watts
Power Output, approx.	2.8 Kilowatts

†At crest of a-f cycle with modulation factor of 1.0.

PLATE-MODULATED RADIO-FREQUENCY POWER AMPLIFIER—CLASS C TELEPHONY

(Carrier conditions per tube for use with a maximum modulation factor of 1.0)

Maximum Ratings

DC Plate Voltage	10,500 Volts
DC Grid Voltage	—2,000 Volts
DC Plate Current	1.5 Amperes
DC Grid Current	0.45 Ampere
Plate Input	15 Kilowatts
Plate Dissipation	6.6 Kilowatts

Typical Operation

DC Plate Voltage	10,000 Volts
DC Grid Voltage	—1,300 Volts
Peak R-F Grid Voltage	1,930 Volts
DC Plate Current	1.4 Amperes
DC Grid Current, approx.	0.15 Ampere
Driving Power, approx.	280 Watts
Power Output, approx.	11.9 Kilowatts

RADIO-FREQUENCY POWER AMPLIFIER AND OSCILLATOR—CLASS C TELEGRAPHY

Key-down conditions per tube without amplitude modulation¶

Maximum Ratings, Absolute Values

DC Plate Voltage	12,500 Volts
DC Grid Voltage	—2,000 Volts
DC Plate Current	3 Amperes
DC Grid Current	0.45 Ampere
Plate Input	32.5 Kilowatts
Plate Dissipation	10 Kilowatts

Typical Operation

DC Plate Voltage	8,000	10,000	12,000 Volts
Filament Voltage	10.5	10.7	10.9 Volts
DC Grid Voltage	—680	—870	—1,170 Volts
Peak R-F Grid Voltage	1,300	1,620	2,130 Volts
DC Plate Current	1.5	2.0	2.5 Amperes
DC Grid Current, approx.	.19	.20	.22 Ampere
Driving Power, approx.	250	320	470 Watts
Power Output, approx.	9.2	15	22.5 Kilowatts

¶Modulation essentially negative; may be used if positive peak of the envelope does not exceed 115 percent of carrier conditions.

Federal's name on a tube signifies the best in design, engineering, materials, components and craftsmanship.

FEDERAL POWER TRIODE
Type F-5604
10 Kilowatts Plate Dissipation

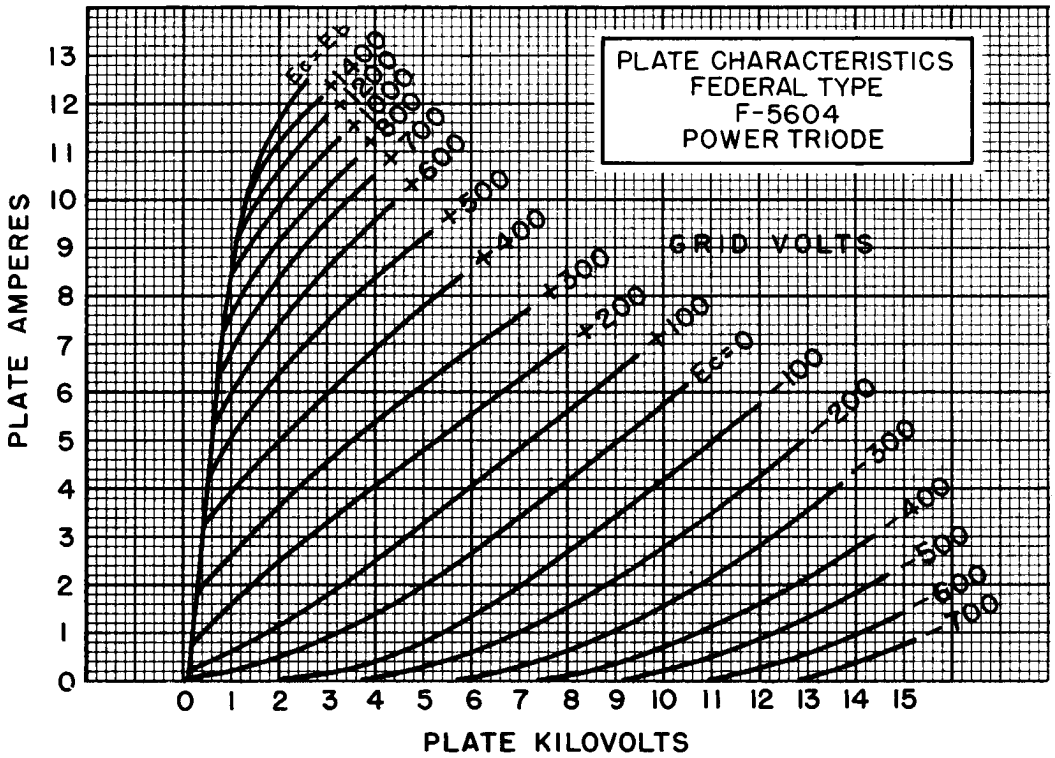

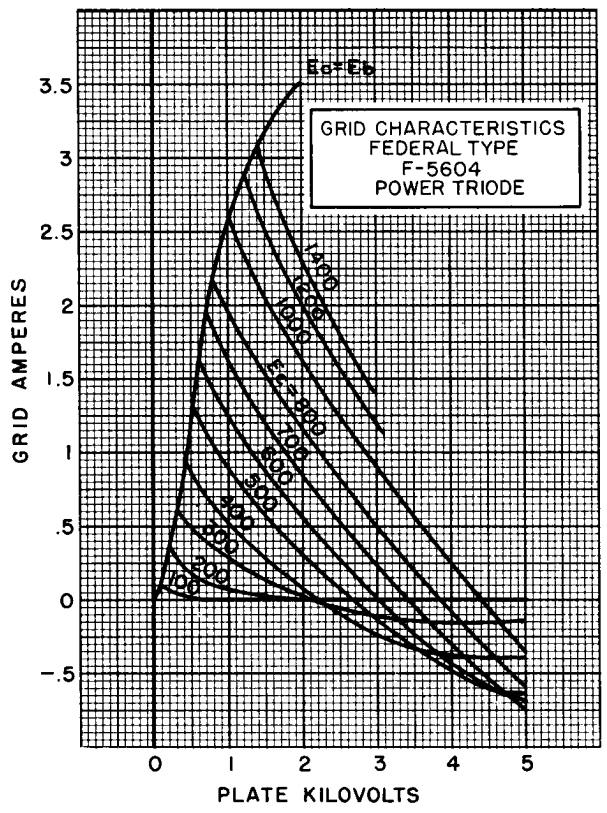

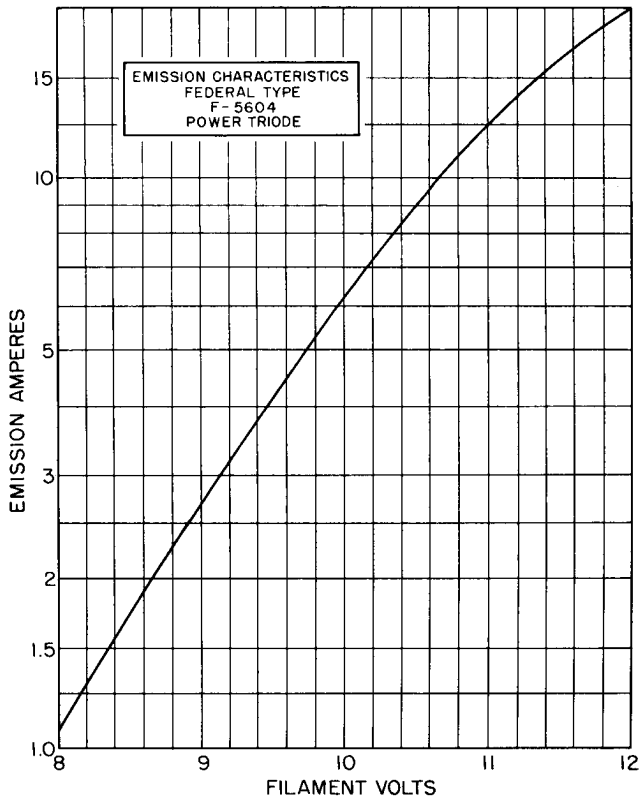

FEDERAL POWER TRIODE
Type F-5604
10 Kilowatts Plate Dissipation

One reason why Federal tubes are trade-marked, is to show the craftsman's pride and Federal's satisfaction in work well done.

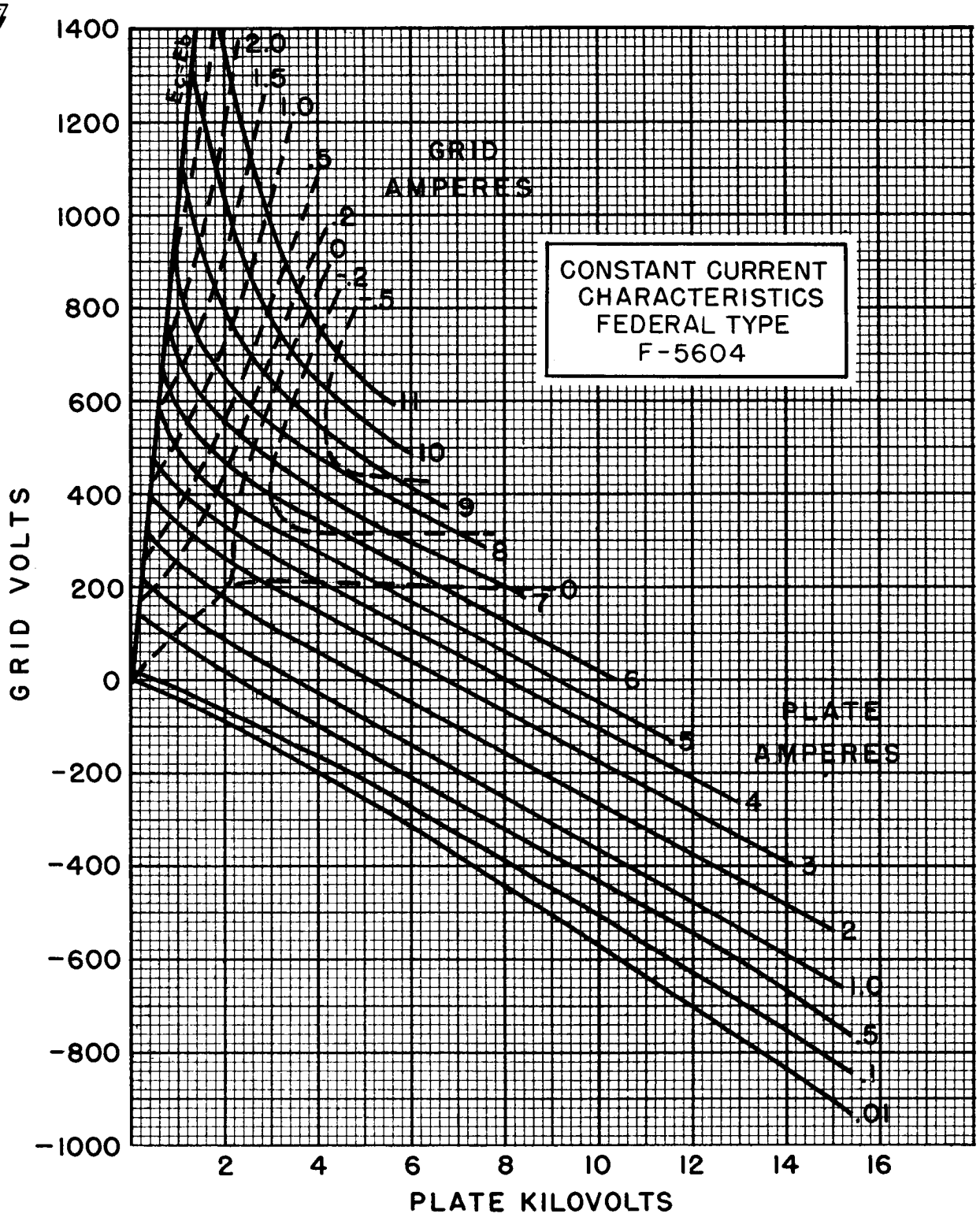

That Federal tubes, by their performance, largely sell themselves, is a tribute to the product and to the manufacturer.

FEDERAL POWER TRIODE
Type F-5604
10 Kilowatts Plate Dissipation

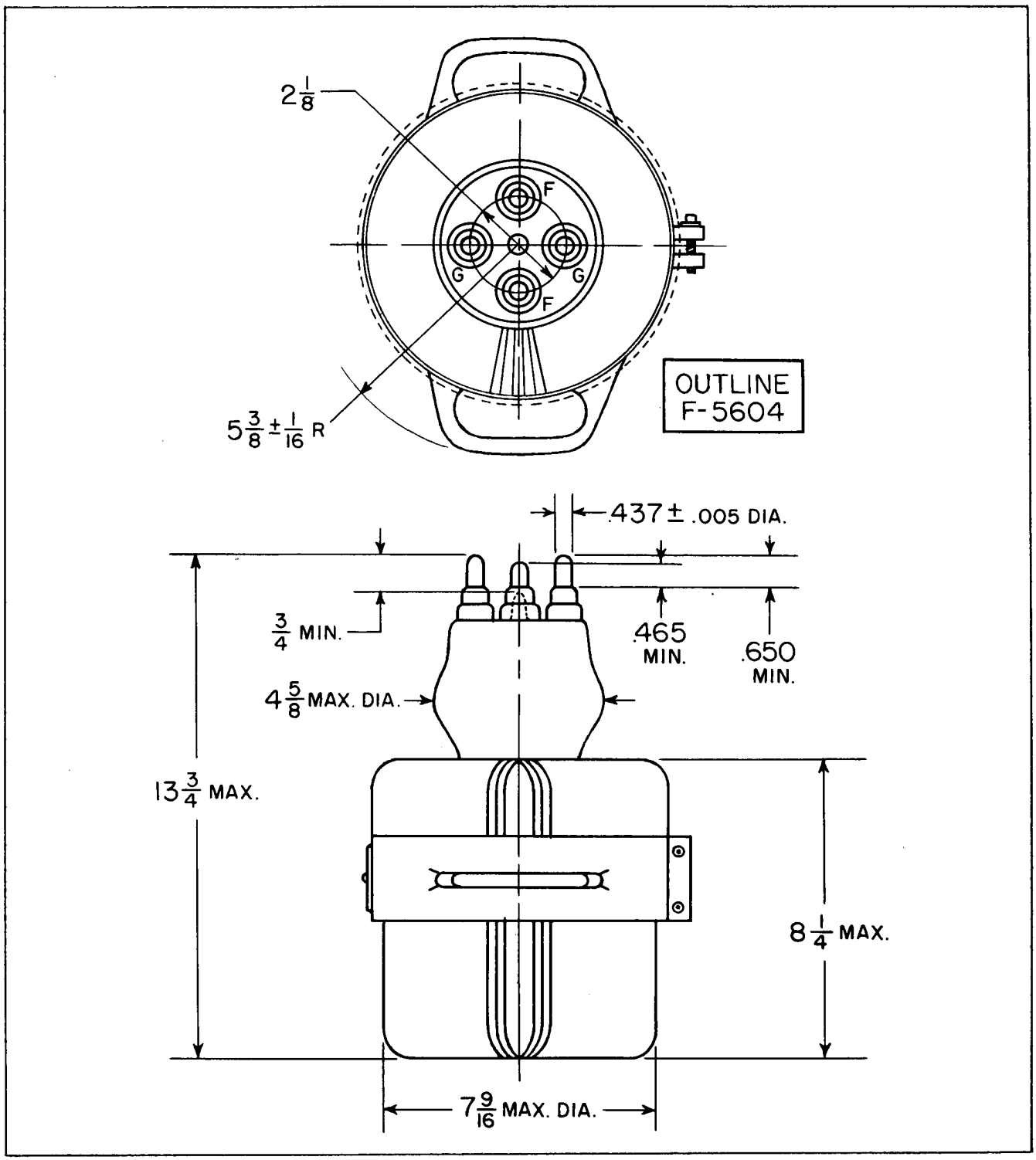

Federal Telephone and Radio Company
100 Kingsland Road VACUUM TUBE DEPARTMENT Clifton, New Jersey

Federal Always Has
Made Better Tubes

Form F-629 Printed in U. S. A.

FEDERAL POWER TRIODE
Type F-5658
20 Kilowatts Plate Dissipation

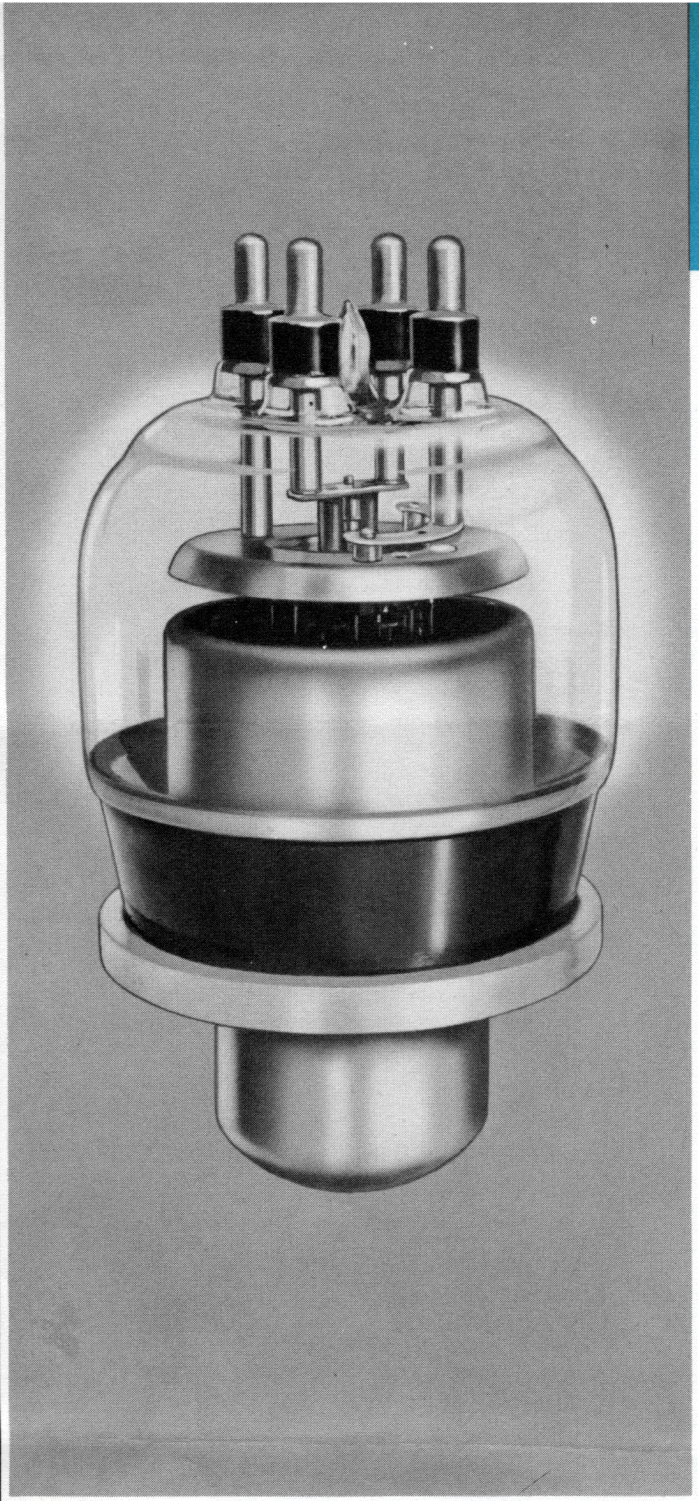

GENERAL DATA

DESCRIPTION:

Federal's F-5658 is a three-electrode tube built for use as a radio-frequency amplifier, oscillator, or a Class B modulator. The anode is water-cooled, capable of dissipating 20 kilowatts. The cathode is a pure tungsten filament. The design of the terminal mount connections and the re-entrant anode minimize lead inductance, make the tube particularly suitable for high-frequency applications up to 15 megacycles at full ratings, 45 megacycles at reduced ratings.

Electrical:

Filament Voltage	12 Volts
Filament Current	290 Amperes
Filament Starting Current	450 Amperes max.
Filament Cold Resistance	.0036 Ohms
Amplification Factor, at I_b = 2.0 amps., E_c = — 100 volts	20.5
Interelectrode Capacitances	
Grid-Plate	24 $\mu\mu$f
Grid-Filament	39 $\mu\mu$f
Plate-Filament	2 $\mu\mu$f

Mechanical:

Mounting Position— Vertical, anode down	
Type of Cooling— Water and Forced Air	
Water Flow on Anode	15 GPM
Maximum Outgoing Water Temperature	70° C
Air Flow (to bulb and seals) from a 3-inch diameter nozzle	50 CFM
Maximum Glass Temperature	160° C
Net Weight, approximate	7 Pounds

In the development and production of vacuum tubes Federal carries on extensive laboratory experimentation: new techniques, new processes, new applications.

Copyright 1953, Federal Telephone and Radio Corporation

FEDERAL POWER TRIODE
Type F-5658
20 Kilowatts Plate Dissipation

Maximum Ratings vs. Operating Frequency			
Frequency	15	30	45 Megacycles
Percentage of Maximum Rated Plate Voltage and Plate Input			
Class C—Unmodulated	100	75	50 Per Cent

Maximum Ratings and Typical Operating Conditions

AUDIO-FREQUENCY POWER AMPLIFIER AND MODULATOR—CLASS B

Maximum Ratings, Absolute Values

DC Plate Voltage	12,500 Volts
Maximum Signal DC Plate Current†	5 Amperes
Maximum Signal Plate Input†	40 Kilowatts
Plate Dissipation†	15 Kilowatts

Typical Operation

(Unless otherwise specified, values are for two tubes)

DC Plate Voltage	7,500	10,000 Volts
DC Grid Voltage	—340	—450 Volts
Peak A-F Grid-to-Grid Voltage	1,450	1,680 Volts
Zero Signal DC Plate Current	1.0	1.0 Amperes
Maximum Signal DC Plate Current	6.7	7.0 Amperes
Effective Load Resistance, Plate to Plate	2,300	3,100 Ohms
Maximum Signal Driving Power, Approx.	490	540 Watts
Maximum Signal Power Output, Approx.	31.5	46 Kilowatts

†Averaged over any audio frequency cycle of sine-wave form.

RADIO-FREQUENCY POWER AMPLIFIER—CLASS B

(Carrier conditions per tube for use with a maximum modulation factor of 1.0)

Maximum Ratings, Absolute Values

DC Plate Voltage	12,500 Volts
DC Plate Current	4 Amperes
Plate Input	32 Kilowatts
Plate Dissipation	20 Kilowatts

Typical Operation

DC Plate Voltage	7,500	10,000 Volts
DC Grid Voltage	—340	—460 Volts
Peak R-F Grid Voltage	570	595 Volts
DC Plate Current	3.3	2.75 Amperes
DC Grid Current, approximate	.013	.009 Amperes
Driving Power, approximate‡	1,250	900 Watts
Power Output, approximate	8	9 Kilowatts

‡At crest of audio-frequency cycle with modulation factor of 1.0

PLATE-MODULATED RADIO-FREQUENCY POWER AMPLIFIER—CLASS C TELEPHONY

(Carrier conditions per tube for use with a maximum modulation factor of 1.0)

Maximum Ratings, Absolute Values

DC Plate Voltage	10,500 Volts
DC Grid Voltage	—1,600 Volts
DC Plate Current	3.6 Amperes
DC Grid Current	0.8 Amperes
Plate Input	36 Kilowatts
Plate Dissipation	12 Kilowatts

Typical Operation

DC Plate Voltage	10,000 Volts
DC Grid Voltage	—1,200 Volts
Peak R-F Grid Voltage	1,840 Volts
DC Plate Current	3.6 Amperes
DC Grid Current, approximate	0.64 Amperes
Driving Power, approximate	1,100 Watts
Power Output, approximate	27 Kilowatts

RADIO-FREQUENCY POWER AMPLIFIER AND OSCILLATOR—CLASS C TELEGRAPHY

(Key-down conditions per tube without amplitude modulation)¶

Maximum Ratings, Absolute Values

DC Plate Voltage	12,500 Volts
DC Grid Voltage	—1,600 Volts
DC Plate Current	5.0 Amperes
DC Grid Current	0.8 Amperes
Plate Input	60 Kilowatts
Plate Dissipation	20 Kilowatts

Typical Operation

DC Plate Voltage	10,000	12,000 Volts
DC Grid Voltage	—710	—870 Volts
Peak R-F Grid Voltage	1,230	1,460 Volts
DC Plate Current	3.8	4.5 Amperes
DC Grid Current, approximate	0.5	0.55 Amperes
Driving Power, approximate	600	800 Watts
Power Output, approximate	28	40 Kilowatts

¶Modulation essentially negative may be used if the positive peak of the envelope does not exceed 115 per cent of carrier conditions.

An IT&T Associate

To satisfy the demand of industrial heating services, Federal's F-5658 uses rugged Kovar grid and filament seals.

FEDERAL POWER TRIODE
Type F-5658
20 Kilowatts Plate Dissipation

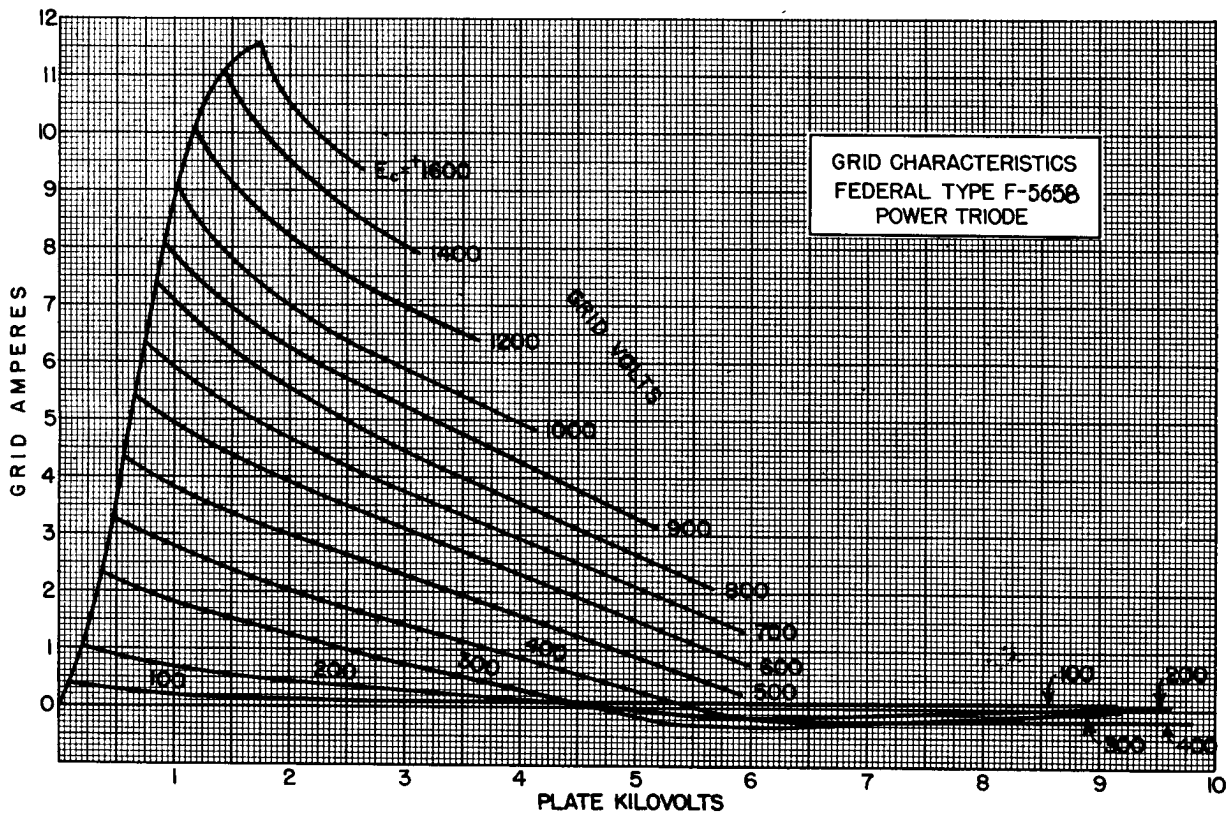

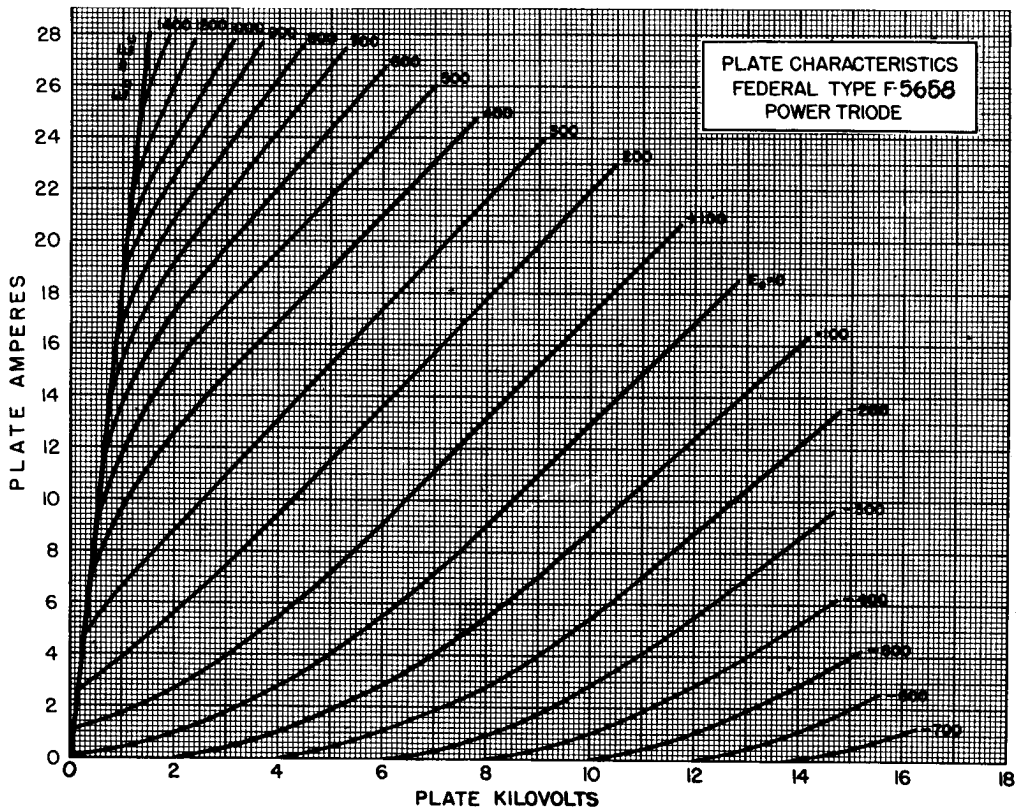

FEDERAL POWER TRIODE
Type F-5658
20 Kilowatts Plate Dissipation

Backed by years of engineering and manufacturing experience, Federal tubes have consistently set the world's *standards of performance* in broadcast service.

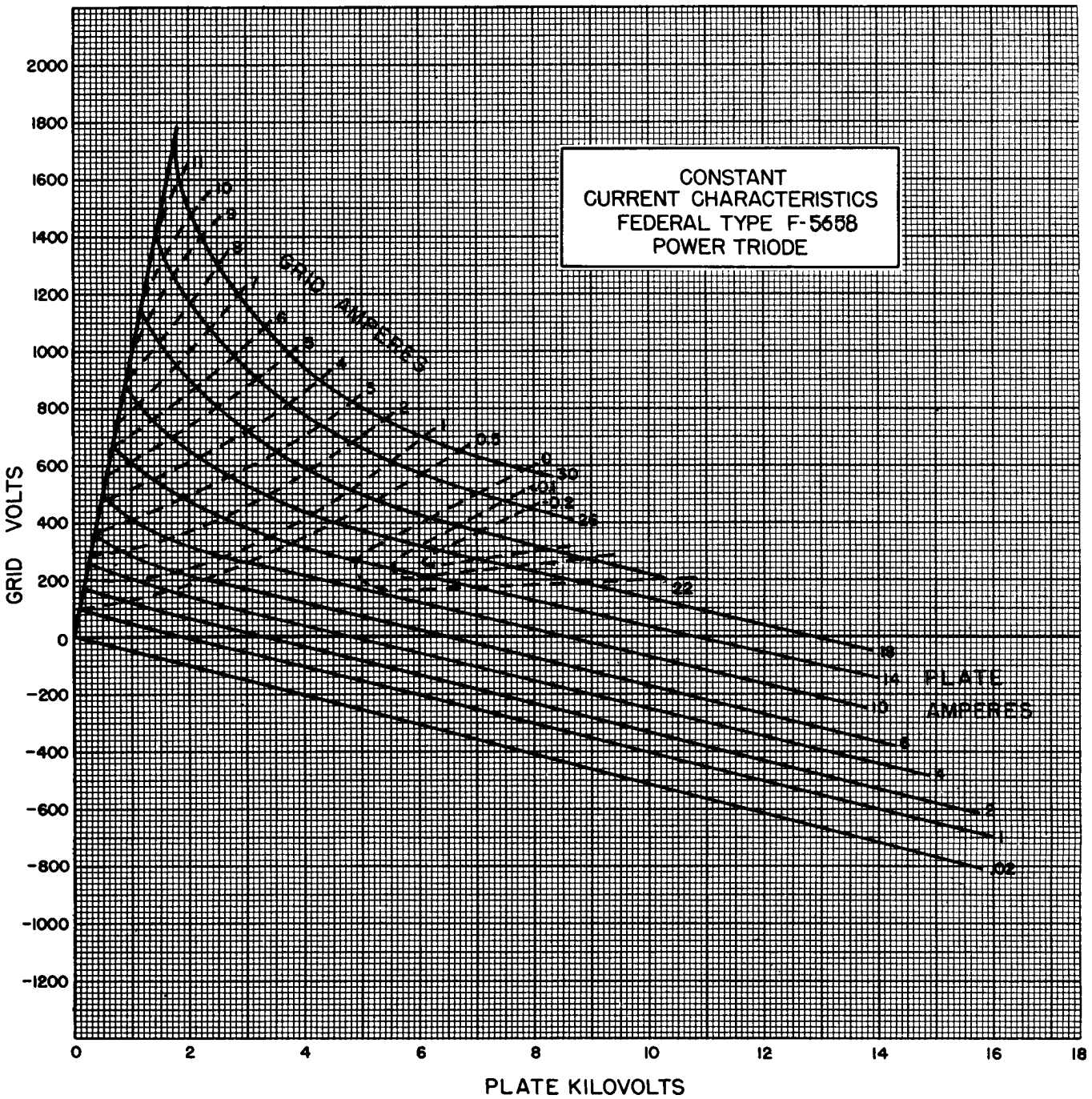

More than 100,000 letters requesting copies of Federal's *Handbook of Tube Operation* have been received from engineers in all parts of the world. Would *you* care for a copy?

FEDERAL POWER TRIODE
Type F-5658
20 Kilowatts Plate Dissipation

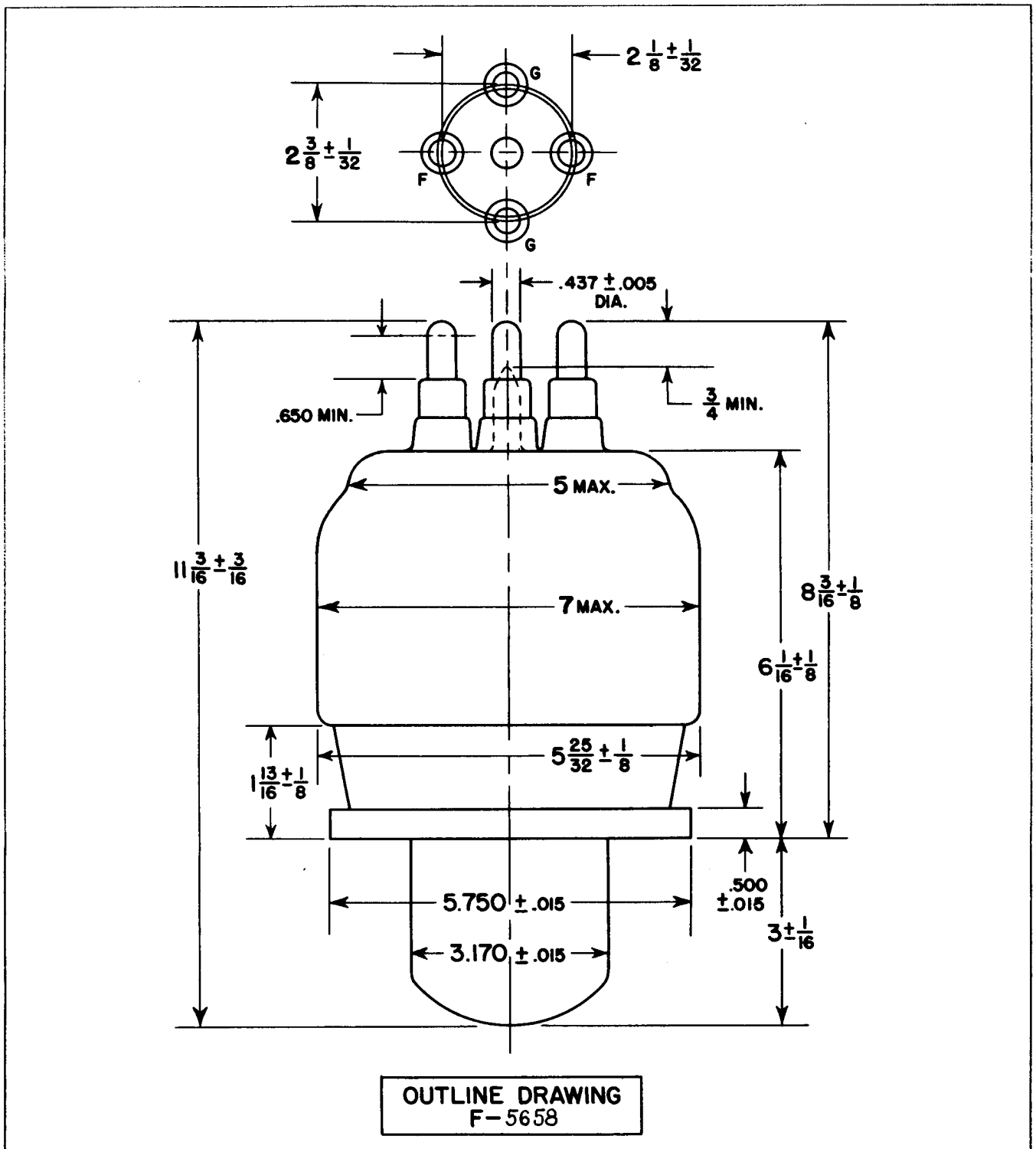

OUTLINE DRAWING
F-5658

Federal Telephone and Radio Corporation
100 Kingsland Road Clifton, New Jersey

An IT&T Associate

Federal Always Has
Made Better Tubes

Form FJ-528 Printed in U. S. A.

FEDERAL POWER TRIODE
Type F-5666
12.5 Kilowatts Plate Dissipation

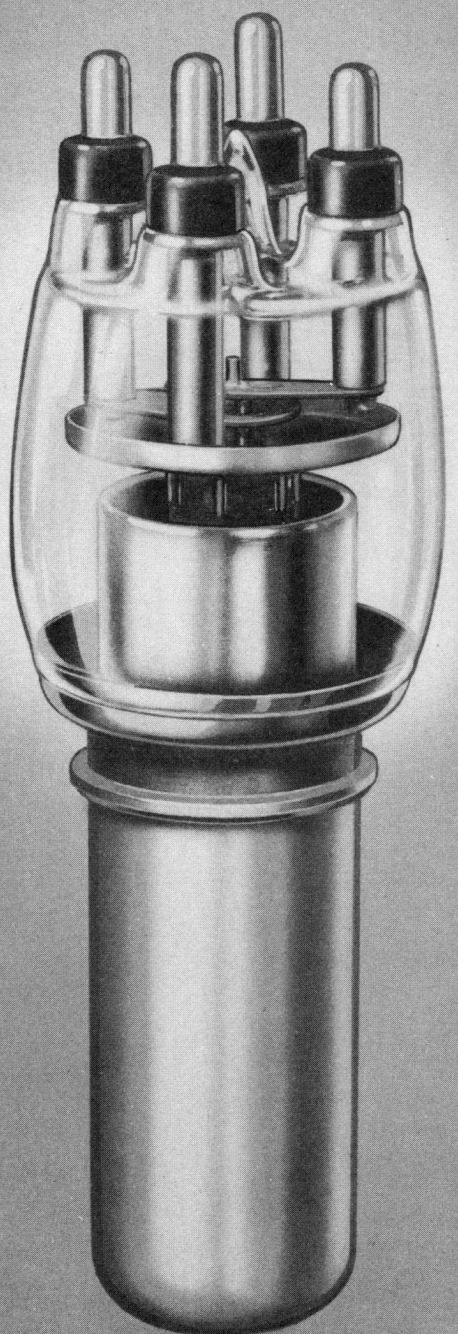

GENERAL DATA

DESCRIPTION:

The F-5666 by Federal is a three-electrode tube designed for use as a radio-frequency amplifier, oscillator, or Class B modulator. It is ruggedly constructed to meet the severe conditions of radio-frequency heating service. This special feature contributes to a better performance when the F-5666 is used to replace the Type 889-A. The anode (heavy wall design) is water-cooled, capable of dissipating 12.5 kilowatts. The cathode is a pure tungsten filament. Maximum ratings apply up to 22.5 megacycles. Operation at 50 megacycles is permissible with plate voltage and input reduced to one-half maximum ratings.

Electrical:

Filament Voltage	11.0 Volts
Filament Current	120 Amperes
Filament Starting Current	180 Amperes Max.
Filament Cold Resistance	.0083 Ohms
Peak Cathode Current	7.5 Amperes
Amplification Factor $I_b = 1.0$ Amp.; $E_c = -100$ Volts	21
Interelectrode Capacitances	
Grid-Plate	17.5 $\mu\mu f$
Grid-Filament	23.3 $\mu\mu f$
Plate-Filament	2.7 $\mu\mu f$

Mechanical:

Mounting Position—Vertical, Anode Down	
Type of Cooling—Water and Forced Air	
Water Flow on Anode	5 GPM
Maximum Outgoing Water Temperature	70° C
Air Flow on Bulb*	30 CFM
Maximum Glass Temperature	160° C
Net Weight, Approx.	4 Pounds

*Operation at frequencies above 15 Mc may require air-flow onto the dish center in order to hold the temperature of the seals and dish below 160° C. The blower required should deliver 30 C.F.M. through a 3" nozzle.

Copyright 1949, Federal Telephone and Radio Corporation

Federal Telephone and Radio Corporation

FEDERAL POWER TRIODE
Type F-5666
12.5 Kilowatts Plate Dissipation

Internal construction based on Federal's advanced designs and techniques makes for longer F-5666 life and finer performance.

Maximum Ratings and Typical Operating Conditions

AUDIO-FREQUENCY POWER AMPLIFIER AND MODULATOR—CLASS B

Maximum Ratings

DC Plate Voltage	10,000 Volts
Maximum Signal DC Plate Current**	2 Amperes
Maximum Signal Plate Input**	16 Kilowatts
Plate Dissipation**	12.5 Kilowatts

Typical Operation

(Unless otherwise specified, values are for two tubes)

DC Plate Voltage	7,500 Volts
DC Grid Voltage	—300 Volts
Peak A-F Grid to Grid Voltage	1,700 Volts
Zero Signal DC Plate Current	0.4 Ampere
Maximum Signal DC Plate Current	3.2 Amperes
Effective Load Resistance, Plate to Plate	5,000 Ohms
Maximum Signal Driving Power, Approximate	150 Watts
Maximum Signal Power Output, Approximate	15 Kilowatts

**Averaged over any audio-frequency cycle of sine-wave form.

RADIO-FREQUENCY POWER AMPLIFIER —CLASS B TELEPHONY

(Carrier conditions per tube for use with a maximum modulation factor of 1.0)

Maximum Ratings

DC Plate Voltage	10,000 Volts
DC Plate Current	1.0 Ampere
Plate Input	10 Kilowatts
Plate Dissipation	12.5 Kilowatts

Typical Operation

DC Plate Voltage	9,000 Volts
DC Grid Voltage	—350 Volts
Peak R-F Grid Voltage	450 Volts
DC Plate Current	0.8 Ampere
Driving Power, Approximate†	110 Watts
Power Output, Approximate	2.5 Kilowatts

†At crest of a-f cycle with modulation factor of 1.0.

PLATE-MODULATED RADIO-FREQUENCY POWER AMPLIFIER—CLASS C TELEPHONY

(Carrier conditions per tube for use with a maximum modulation factor of 1.0)

Maximum Ratings

DC Plate Voltage	8,000 Volts
DC Grid Voltage	—1,500 Volts
DC Plate Current	1.0 Ampere
DC Grid Current	0.35 Ampere
Plate Input	8 Kilowatts
Plate Dissipation	7.5 Kilowatts

Typical Operation

DC Plate Voltage	6,000	7,500 Volts
DC Grid Voltage	—900	—1,200 Volts
Peak R-F Grid Voltage	1,420	1,700 Volts
DC Plate Current	1.0	.88 Ampere
DC Grid Current, approx.	0.1	.08 Ampere
Driving Power, approx.	140	140 Watts
Power Output, approx.	4	5 Kilowatts

RADIO-FREQUENCY POWER AMPLIFIER AND OSCILLATOR—CLASS C TELEGRAPHY

*(Key-down conditions per tube without modulation)**

Maximum Ratings

DC Plate Voltage	10,000 Volts
DC Grid Voltage	—1,500 Volts
DC Plate Current	2 Amperes
DC Grid Current	0.35 Ampere
Plate Input	20 Kilowatts
Plate Dissipation	12.5 Kilowatts

Typical Operation

DC Plate Voltage	6,000	7,500	9,000 Volts
Filament Voltage	10.6	10.7	10.8 Volts
DC Grid Voltage	—500	—600	—750 Volts
Peak R-F Grid Voltage	1,200	1,400	1,700 Volts
DC Plate Current	1.6	1.8	2.0 Amps.
DC Grid Current, approx.	.19	.20	.21 Amps.
Driving Power, approx.	220	270	340 Watts
Power Output, approx.	6.3	8.9	12.2 K.W.

*Modulation essentially negative may be used if the positive peak of the audio-frequency envelope does not exceed 115% of the carrier conditions.

AN IT&T ASSOCIATE

Federal's F-5666 is a "must" for equipment manufacturers who have an eye for both *new* design and *new* operating economies.

FEDERAL POWER TRIODE
Type F-5666
12.5 Kilowatts Plate Dissipation

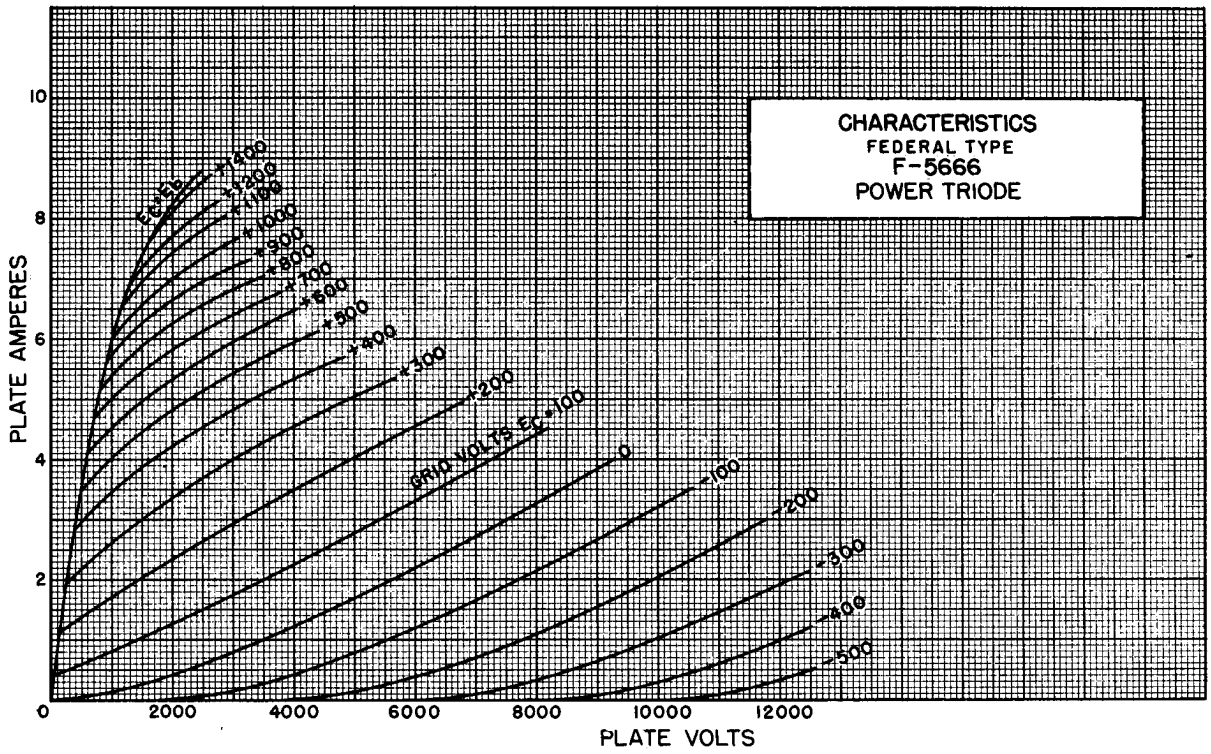

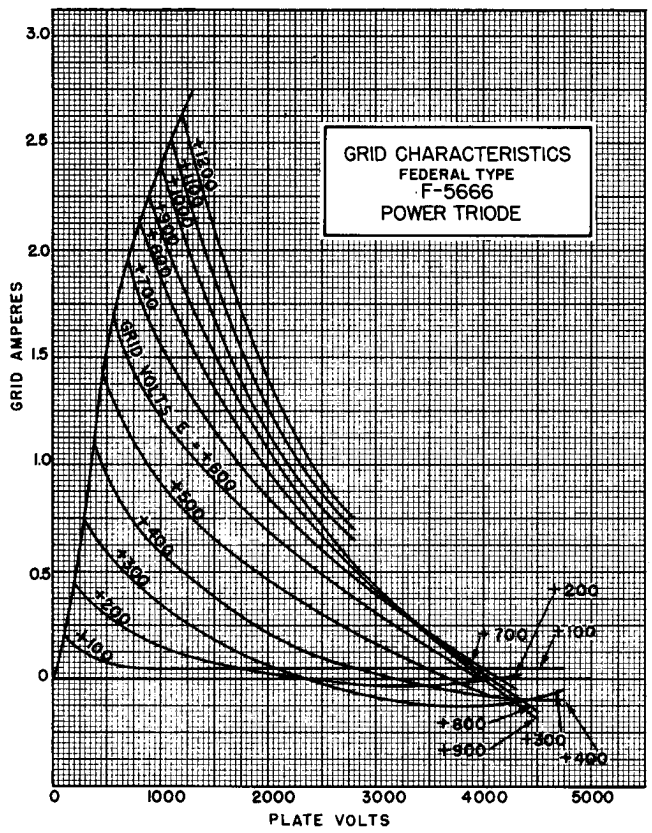

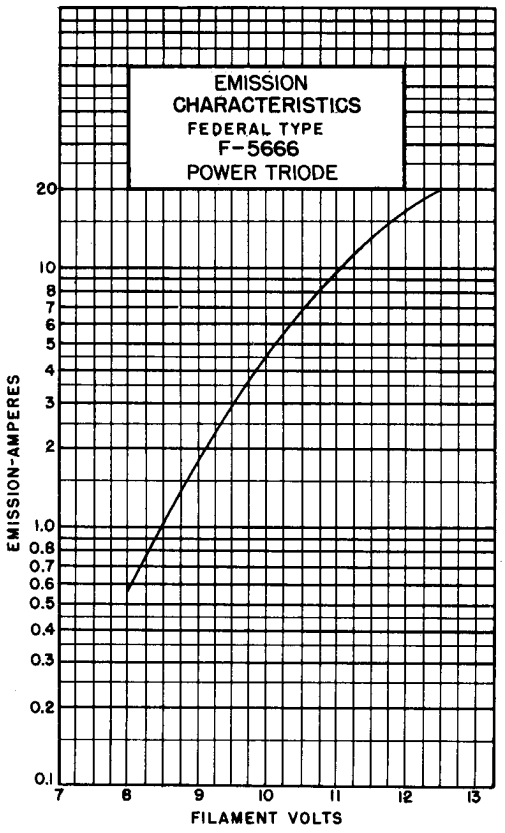

FEDERAL POWER TRIODE
Type F-5666
12.5 Kilowatts Plate Dissipation

Federal's F-5666 has the rugged design and structure indispensable to trouble-free operation in induction and dielectric applications.

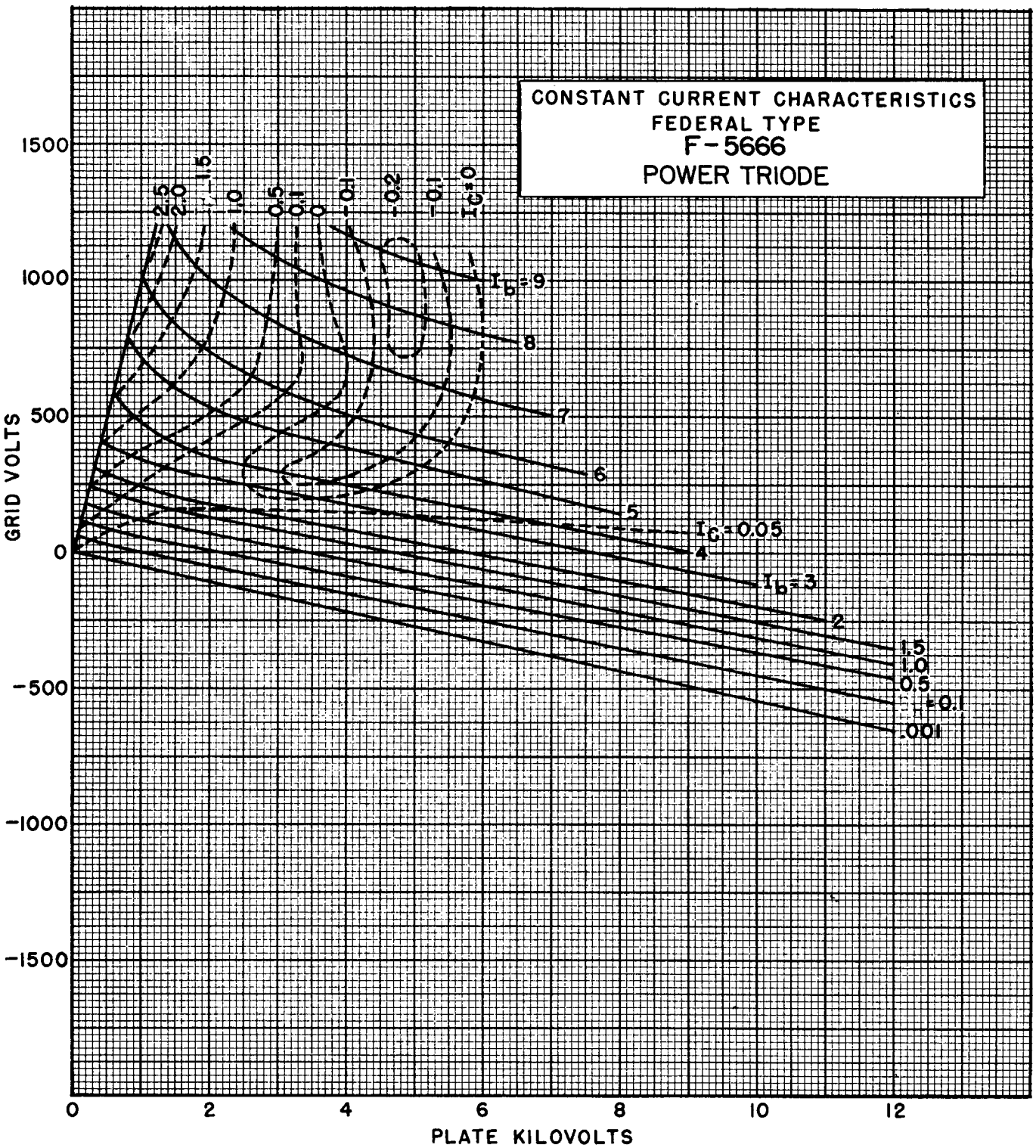

AN IT&T ASSOCIATE

The long life qualities of F-5666 are not accidental "by-products", but the result of Federal's objective research and development work.

FEDERAL POWER TRIODE
Type F-5666
12.5 Kilowatts Plate Dissipation

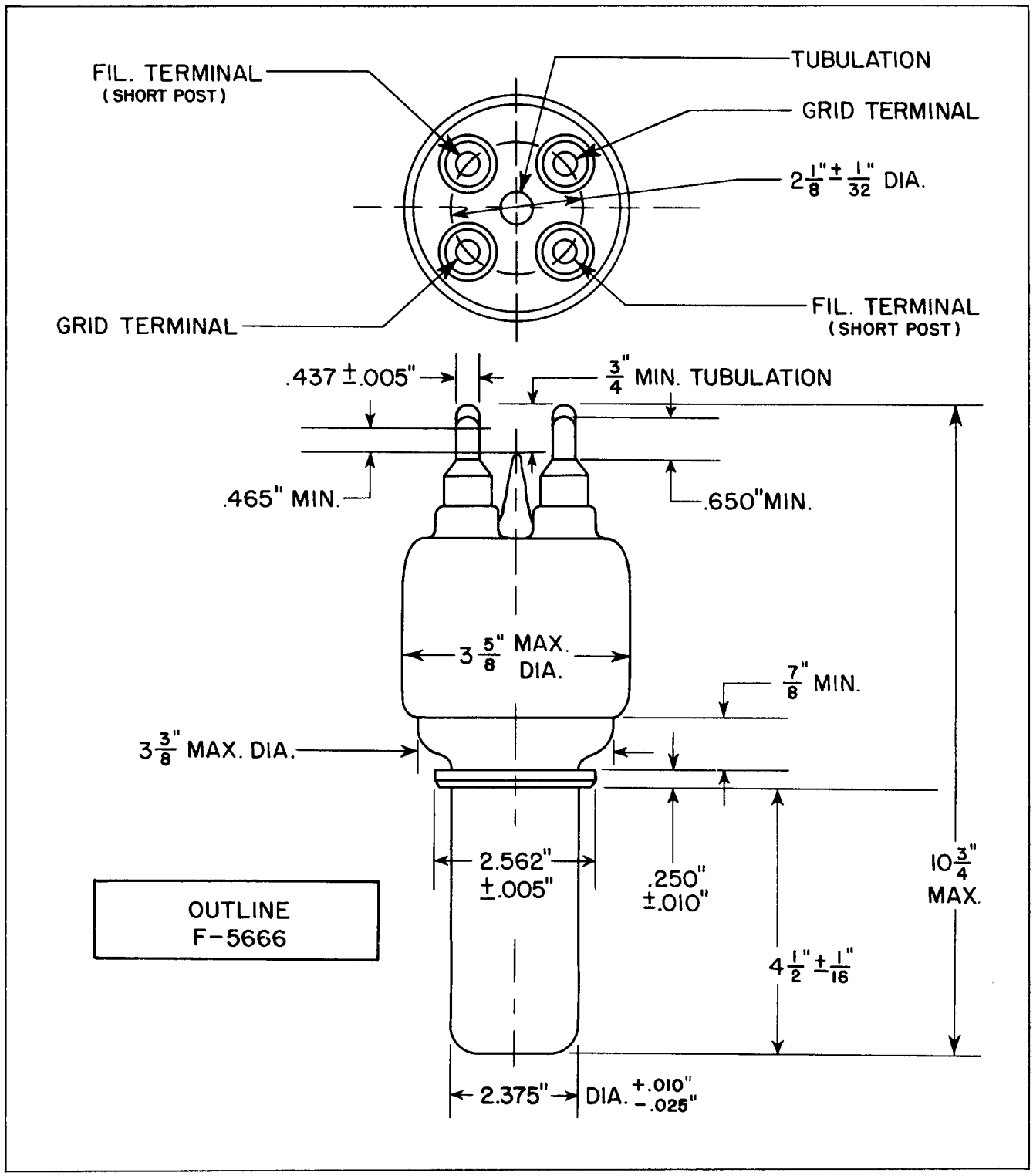

OUTLINE
F-5666

Federal Telephone and Radio Corporation
100 Kingsland Road Clifton, New Jersey

An IT&T Associate

Federal Always Has
Made Better Tubes

Form FJ-417 Printed in U. S. A.

FEDERAL POWER TRIODE
Type F-5667
7.5 Kilowatts Plate Dissipation

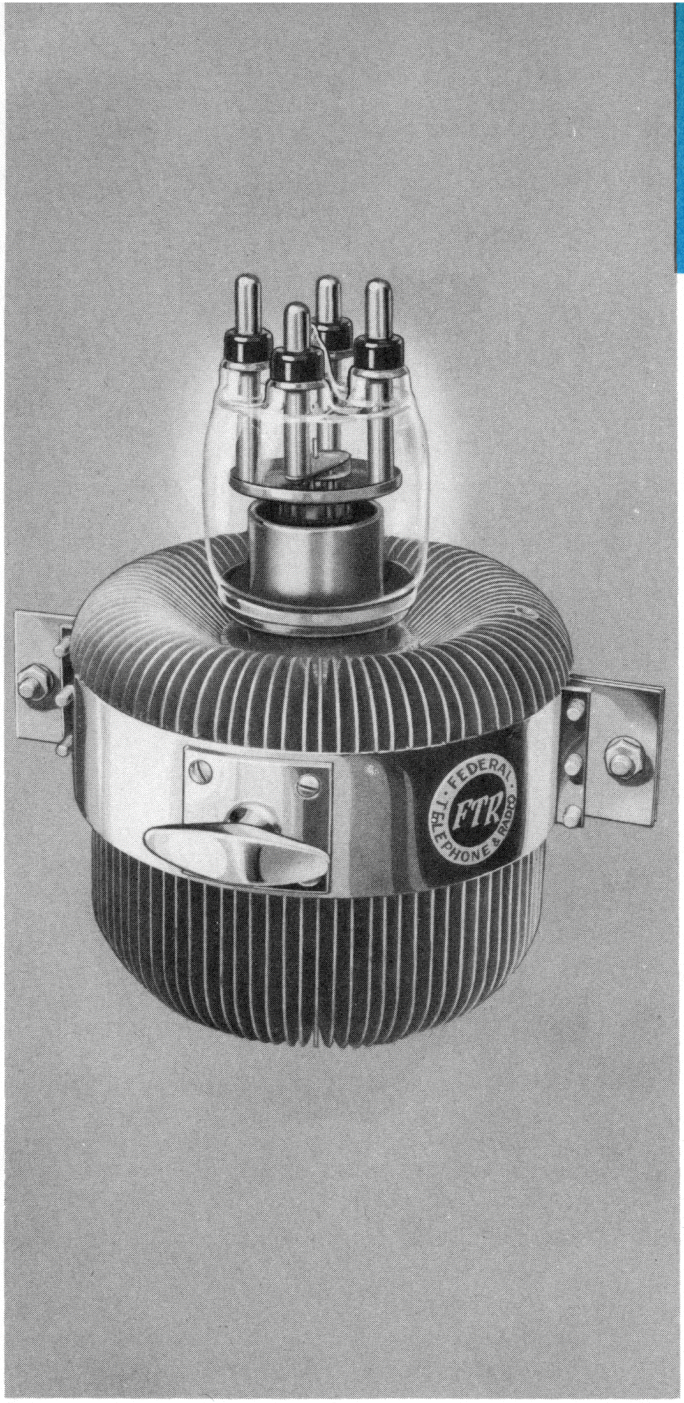

Federal's advanced techniques of design and processing are vital factors in achieving the superiority of F-5667 performance . . . as a radio frequency amplifier, oscillator, Class B modulator or as a replacement for the Type 889-RA in communications equipment.

GENERAL DATA

DESCRIPTION:

Federal's Type F-5667 is a three-electrode tube designed for use as a radio-frequency amplifier, oscillator, or Class B modulator. It is ruggedly constructed to meet the severe conditions of radio-frequency heating service. This special feature contributes to a superior performance when the F-5667 is used as a replacement for the Type 889-RA in communications equipment. The heavy wall anode is forced-air cooled, capable of dissipating 7.5 kilowatts. The cathode is a pure tungsten filament. Maximum ratings apply up to 22.5 megacycles. Operation at 50 megacycles is permissible with plate voltage and input reduced to one-half maximum ratings.

Electrical:

Filament Voltage	11.0 Volts
Filament Current	120 Amperes
Filament Starting Current	180 Amperes max.
Peak Cathode Current	7.5 Amperes
Filament Cold Resistance	.0083 Ohms
Amplification Factor, Ib = 1.0 Amp.; Ec = −100 Volts	21
Interelectrode Capacitances	
Grid-Plate	18.5 $\mu\mu$f
Grid-Filament	23.3 $\mu\mu$f
Plate-Filament	3.0 $\mu\mu$f

Mechanical:

Mounting Position— Vertical, Anode Down				
Type of Cooling—Forced Air				
Maximum Incoming Air Temperature				45° C
Required Air Flow on Anode Plate Dissipation—				
Kilowatts	7.5	6.0	4.5	
Air Flow—CFM	550	400	300	
Static Pressure— Inches Water	0.7	0.4	0.2	
Maximum Anode Temperature				230° C
Required Air Flow on Bulb*				30 CFM
Maximum Glass Temperature				160° C
Net Weight, approx.				40 Pounds

*Operation at frequencies above 15 Mc/sec. may require air-flow on the dish center in order to hold the temperature of the seals and dish below 160°C. This flow may be obtained by deflection of the anode cooling air, or by means of a separate blower supplying 30 C.F.M. through a 3" nozzle.

Copyright 1954, Federal Telephone and Radio Company

FEDERAL POWER TRIODE
Type F-5667
7.5 Kilowatts Plate Dissipation

Federal's F-5667 is designed and engineered to meet the specific requirements of the makers of RF heating equipment.

Maximum Ratings and Typical Operating Conditions

AUDIO-FREQUENCY POWER AMPLIFIER AND MODULATOR—CLASS B

Maximum Ratings

DC Plate Voltage	10,000 Volts
Max. Signal DC Plate Current**	2 Amperes
Max. Signal Plate Input**	16 Kilowatts
Plate Dissipation**	7.5 Kilowatts

Typical Operation

(Unless otherwise specified, values are for 2 tubes)

DC Plate Voltage	7,500 Volts
DC Grid Voltage	—300 Volts
Peak A-F Grid to Grid Voltage	1,700 Volts
Zero Signal DC Plate Current	0.4 Amperes
Maximum Signal DC Plate Current	3.2 Amperes
Effective Load Resistance (plate to plate)	5,000 Ohms
Maximum Signal Driving Power, approx.	150 Watts
Maximum Signal Power Output, approx.	15 Kilowatts

**Averaged over any audio-frequency cycle of a sine-wave form.

RADIO-FREQUENCY POWER AMPLIFIER —CLASS B TELEPHONY

(Carrier conditions per tube for use with a maximum modulation factor of 1.0)

Maximum Ratings

DC Plate Voltage	10,000 Volts
DC Plate Current	1.0 Ampere
Plate Input	10 Kilowatts
Plate Dissipation	7.5 Kilowatts

Typical Operation

DC Plate Voltage	9,000 Volts
DC Grid Voltage	—350 Volts
Peak R-F Grid Voltage	450 Volts
DC Plate Current	0.8 Ampere
Driving Power, approx.†	110 Watts
Power Output, approx.	2.5 Kilowatts

†At crest of a-f cycle with modulation factor of 1.0.

PLATE-MODULATED RADIO-FREQUENCY POWER AMPLIFIER—CLASS C TELEPHONY

(Carrier conditions per tube for use with a maximum modulation factor of 1.0)

Maximum Ratings

DC Plate Voltage	8,000 Volts
DC Grid Voltage	—1,500 Volts
DC Plate Current	1.0 Ampere
DC Grid Current	0.35 Ampere
Plate Input	8 Kilowatts
Plate Dissipation	5 Kilowatts

Typical Operation

DC Plate Voltage	6,000	7,500 Volts
DC Grid Voltage	—900	—1,200 Volts
Peak R-F Grid Voltage	1,420	1,700 Volts
DC Plate Current	1.0	.88 Ampere
DC Grid Current, approx.	0.1	.08 Ampere
Driving Power, approx.	140	140 Watts
Power Output, approx.	4	5 Kilowatts

RADIO-FREQUENCY POWER AMPLIFIER AND OSCILLATOR—CLASS C TELEGRAPHY

Key-down conditions per tube without amplitude modulation¶

Maximum Ratings, Absolute Values

DC Plate Voltage	10,000 Volts
DC Grid Voltage	—1,500 Volts
DC Plate Current	2.0 Amperes
DC Grid Current	0.35 Amperes
Plate Input	20 Kilowatts
Plate Dissipation	7.5 Kilowatts

Typical Operation

DC Plate Voltage	6,000	7,500	9,000 Volts
Filament Voltage	10.6	10.7	10.8 Volts
DC Grid Voltage	—500	—600	—750 Volts
Peak R-F Grid Voltage	1,200	1,400	1,700 Volts
DC Plate Current	1.6	1.8	2.0 Amperes
DC Grid Current, approx.	.19	.20	.21 Amperes
Driving Power, approx.	220	270	340 Watts
Power Output, approx.	6.3	8.9	12.2 Kilowatts

¶Modulation essentially negative; may be used if positive peak of the envelope does not exceed 115 percent of carrier conditions.

DIVISION OF I T&T

When interchanged with the 889-RA in communications equipment, Federal's F-5667 brings a finer, newer performance.

FEDERAL POWER TRIODE
Type F-5667
7.5 Kilowatts Plate Dissipation

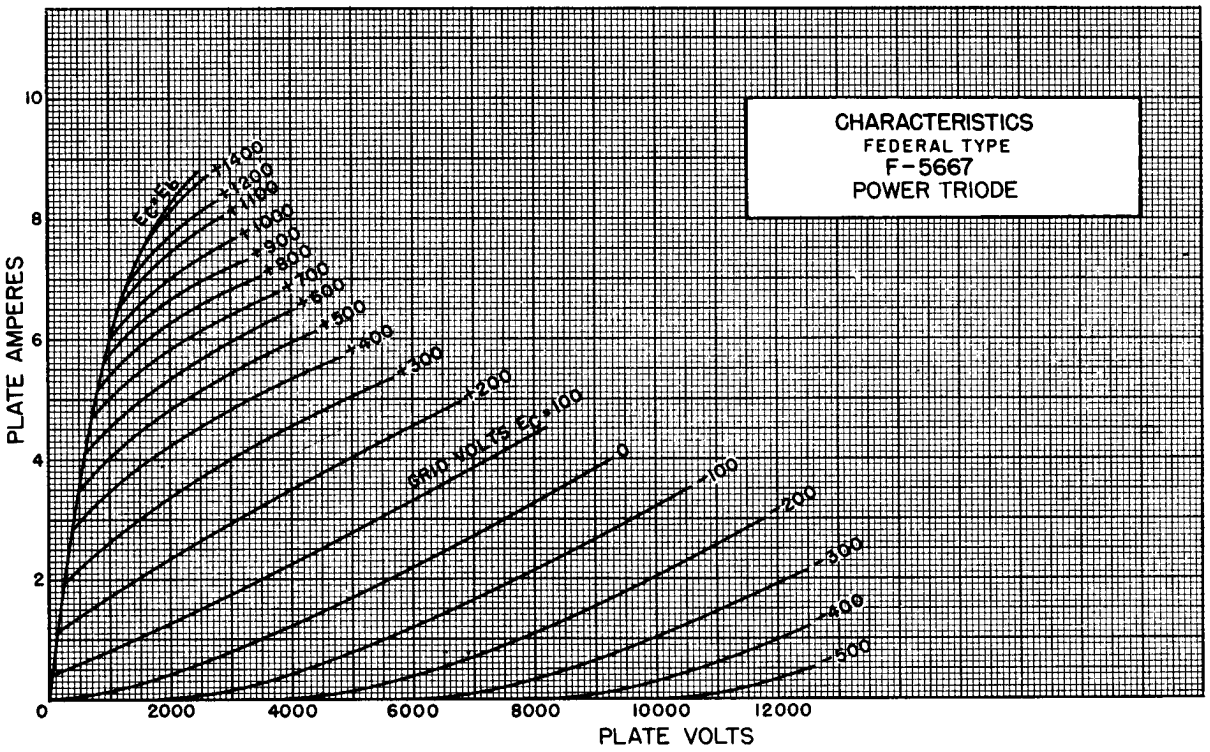

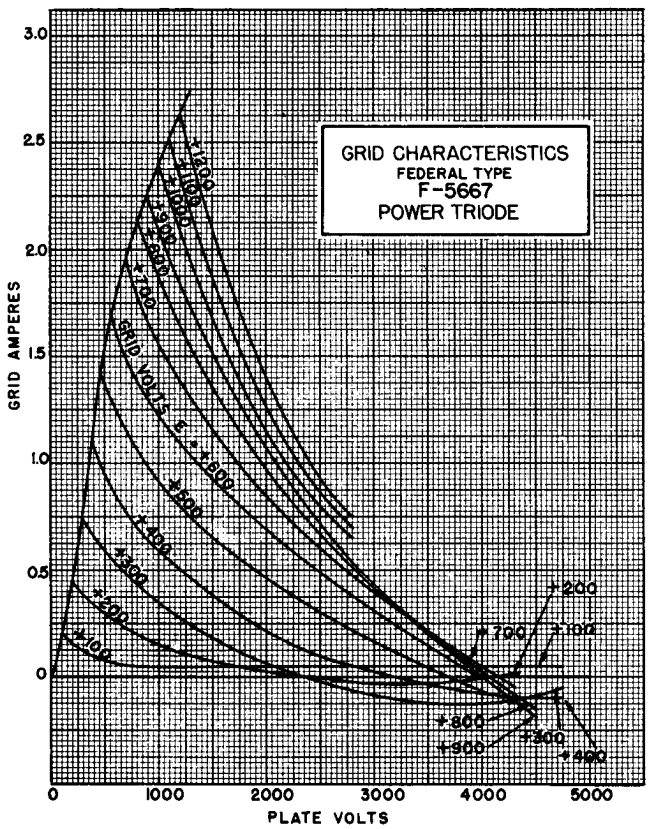

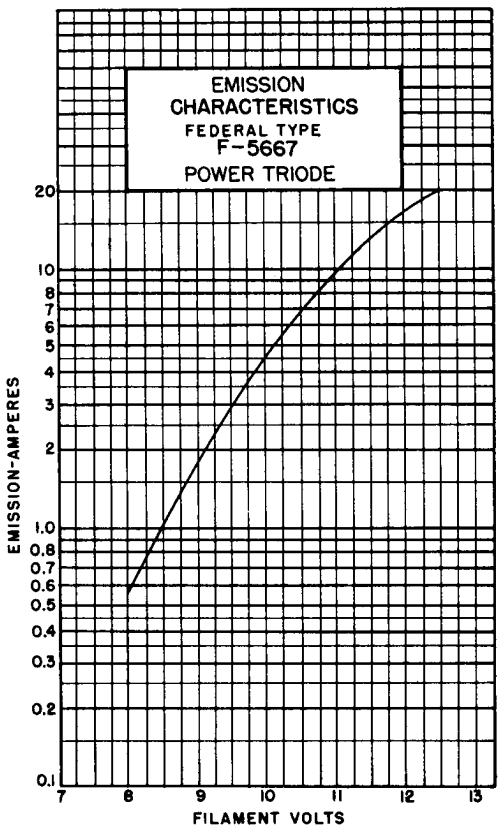

DIVISION OF IT&T

FEDERAL POWER TRIODE
Type F-5667
7.5 Kilowatts Plate Dissipation

Federal's F-5667 is built to "stand-up" on the job, to absorb the wear and tear of a long service life.

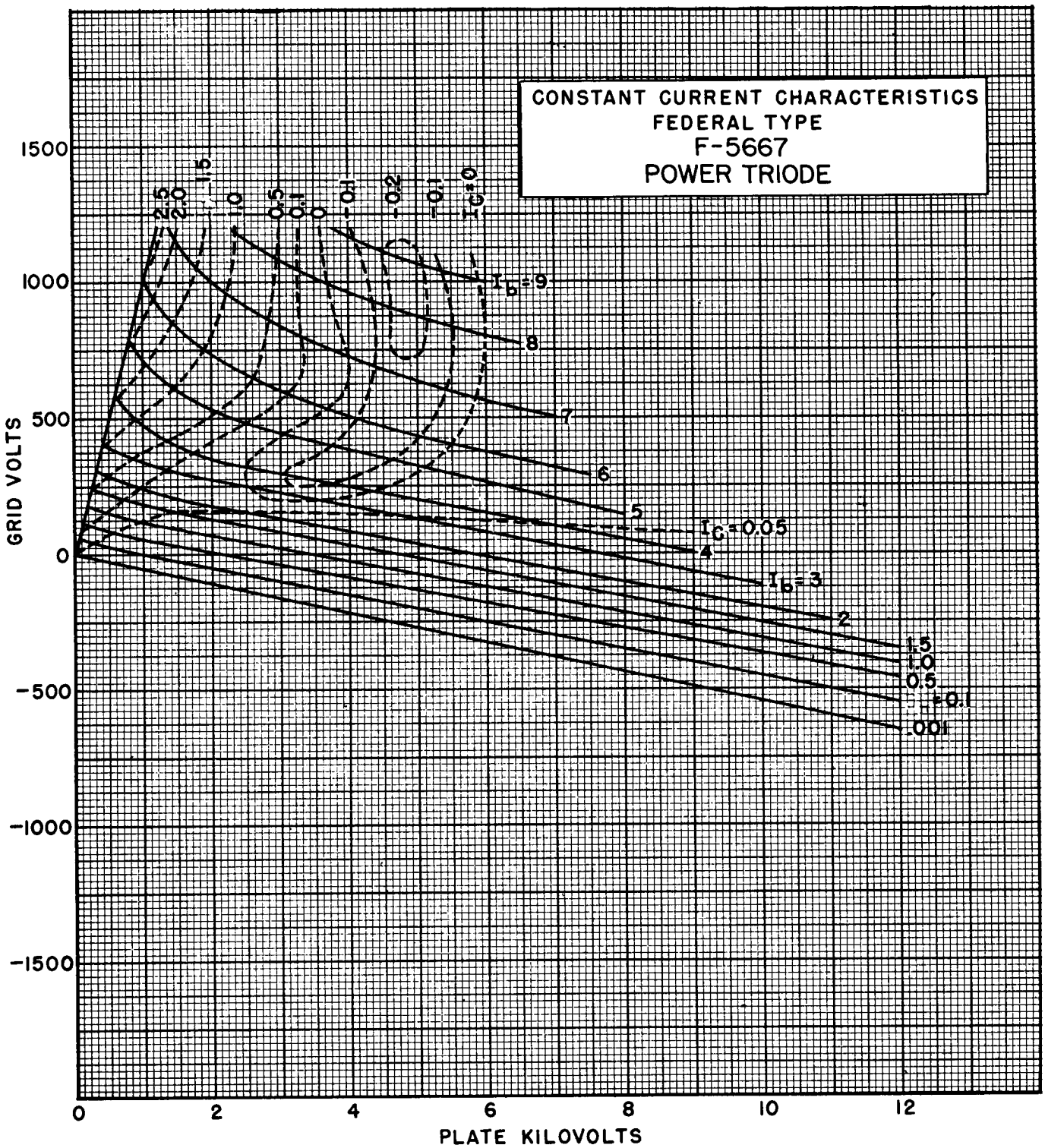

DIVISION OF IT&T

Kovar-to-glass seals are used throughout the F-5667 contributing to the over-all ruggedness of Federal construction.

FEDERAL POWER TRIODE
Type F-5667
7.5 Kilowatts Plate Dissipation

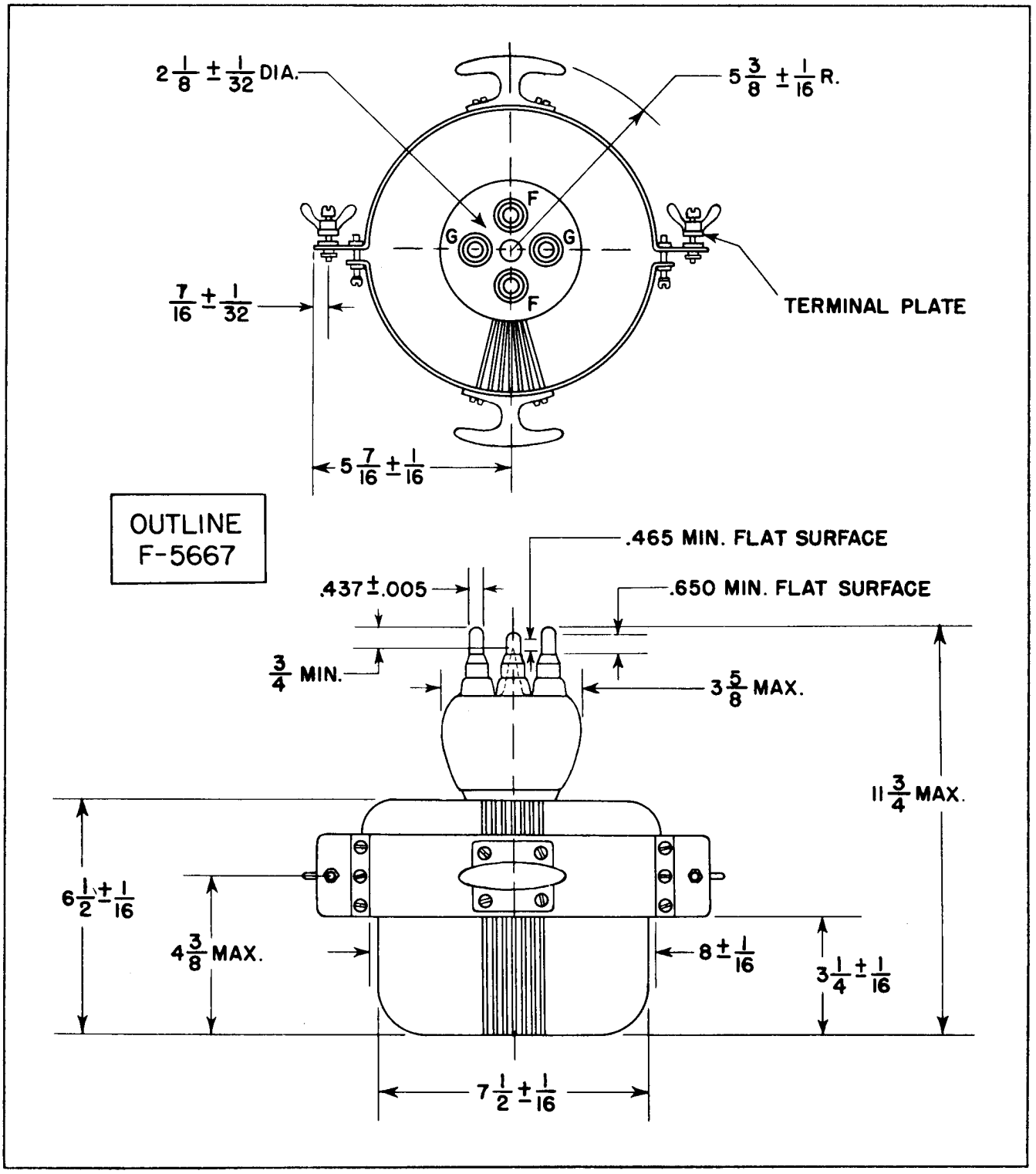

Federal Telephone and Radio Company
100 Kingsland Road Clifton, New Jersey

DIVISION OF IT&T

Federal Always Has
Made Better Tubes

Form FJ-416 Printed in U. S. A.

FEDERAL POWER TRIODE
Type F-5668
20 Kilowatts Plate Dissipation

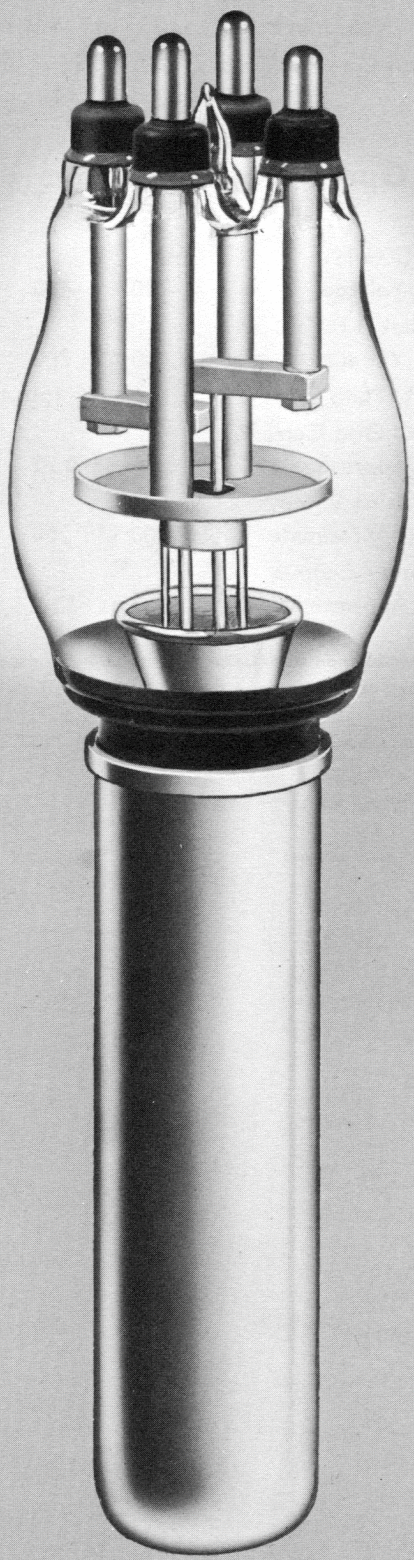

GENERAL DATA

DESCRIPTION:

The F-5668 is a 3-electrode tube designed specifically for radio frequency heating service. In industrial applications, it replaces the Type F-892 without equipment modifications, except for the water jacket. The heavy wall anode is water-cooled and capable of dissipating 20 kilowatts. The tube incorporates rugged kovar plate, grid, and filament seals. The cathode is a pure tungsten filament. Maximum ratings apply up to 5 megacycles with operation up to 20 megacycles permissible at reduced ratings.

Electrical:

Filament Voltage	22 Volts
Filament Current	60 Amperes
Filament Starting Current	120 Amps. max.
Filament Cold Resistance	.031 Ohms
Peak Cathode Current	9.4 Amperes
Amplification Factor, I_b=0.75 amps., E_c=—50 volts	50
Interelectrode Capacitances	
Grid-Plate	30 $\mu\mu$f
Grid-Filament	20 $\mu\mu$f
Plate-Filament	1.5 $\mu\mu$f

Mechanical:

Mounting Position—Vertical, anode down	
Type of Cooling—Water	
Minimum Water Flow on Anode	3 GPM
Maximum Outgoing Water Temperature	70° C
Maximum Glass Temperature	160° C
Air Flow on bulb*	35 CFM
Net Weight, approximate	10 Pounds

*On center of dish from 3 inch nozzle.

Copyright 1953, Federal Telephone and Radio Company

FEDERAL POWER TRIODE
Type F-5668
20 Kilowatts Plate Dissipation

Maximum Ratings vs. Operating Frequency

Frequency	5	12.5	20 Megacycles
Percentage of Maximum Rated Plate Voltage and Plate Input			
Class C — Telegraphy	100	75	50 Per Cent

Maximum Ratings and Typical Operating Conditions

RADIO-FREQUENCY POWER AMPLIFIER AND OSCILLATOR—CLASS C TELEGRAPHY

(Key-down conditions per tube without amplitude modulation)¶

Maximum Ratings, Absolute Values

DC Plate Voltage	14,000 Volts
DC Grid Voltage	—3,000 Volts
DC Plate Current	2.0 Amperes
DC Grid Current	0.4 Amperes
Plate Input	28 Kilowatts
Plate Dissipation	20 Kilowatts

Typical Operation

DC Plate Voltage	8,000	10,000	12,000 Volts
DC Grid Voltage	—300	—400	—500 Volts
Peak R-F Grid Voltage	1,000	1,200	1,400 Volts
DC Plate Current	1.6	1.8	2.0 Amperes
DC Grid Current, approximate	0.21	0.22	0.23 Amperes
Driving Power, approximate	200	250	300 Watts
Power Output, approximate	8.7	12.8	17.5 Kilowatts

¶Modulation essentially negative may be used if the positive peak of the envelope does not exceed 115 per cent of carrier conditions.

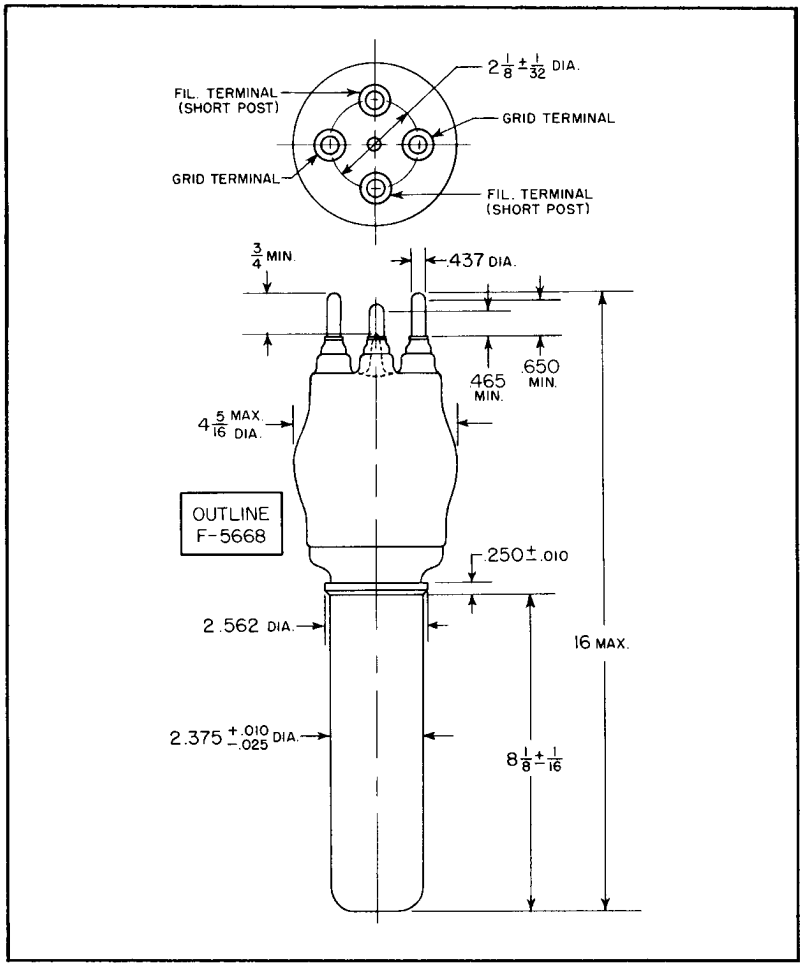

One of the *first* to manufacture power tubes, Federal's experience goes back to the earliest days of the industry.

FEDERAL POWER TRIODE
Type F-5668
20 Kilowatts Plate Dissipation

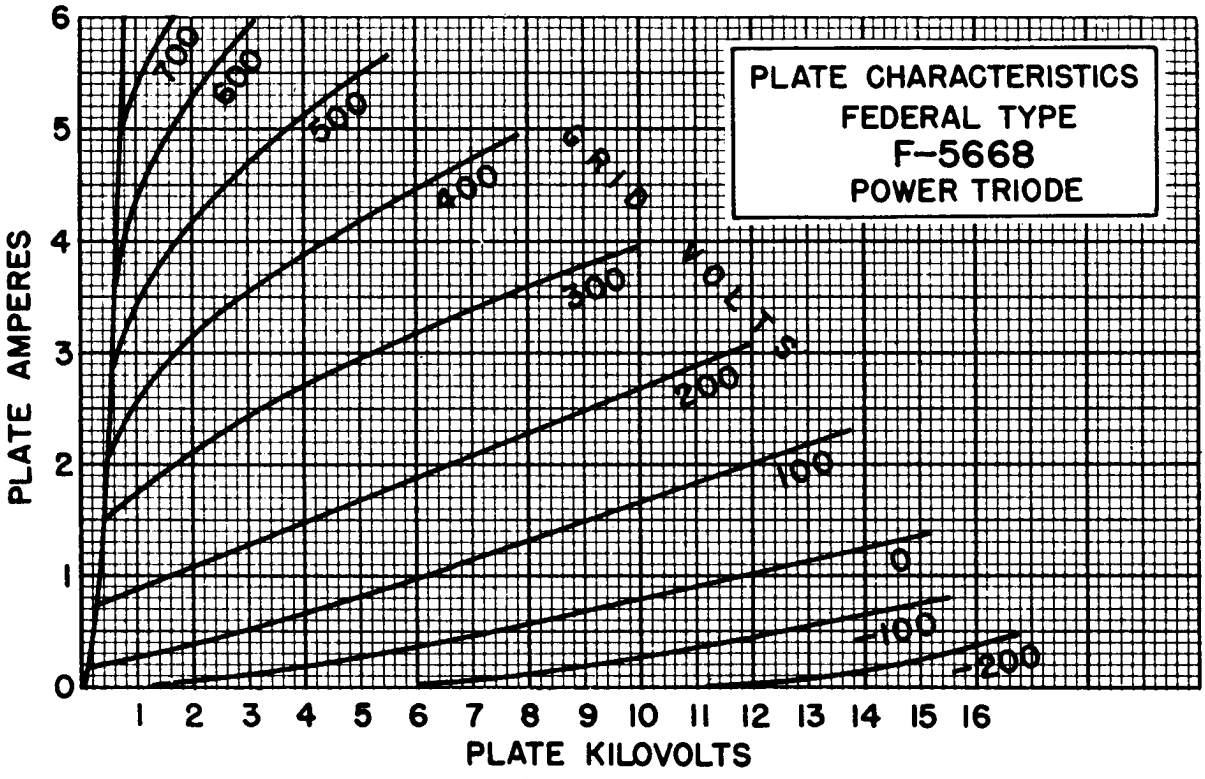

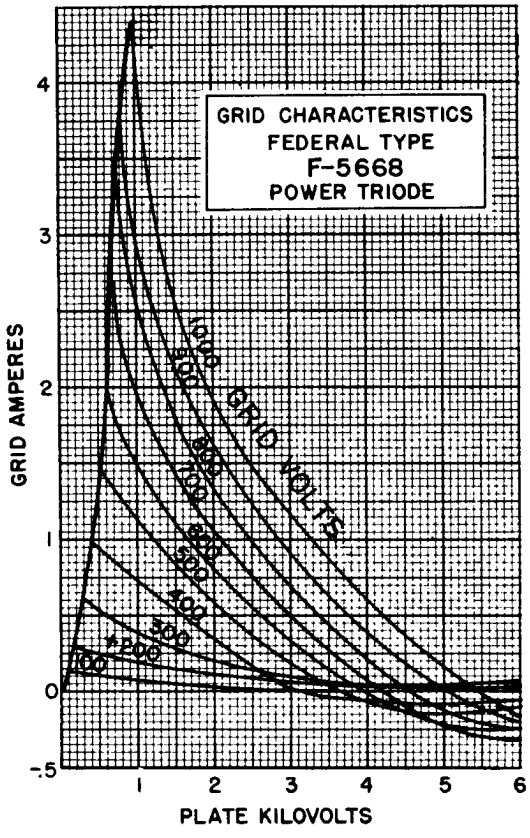

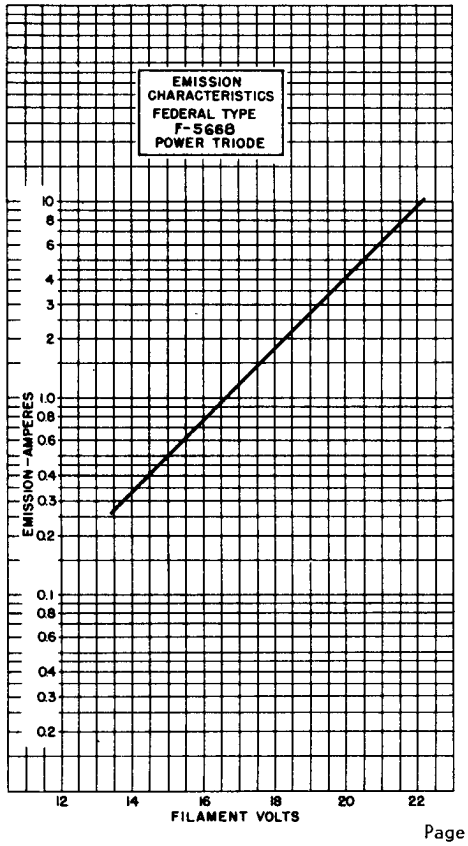

FEDERAL POWER TRIODE
Type F-5668
20 Kilowatts Plate Dissipation

Federal produces tubes of only the highest quality, satisfying the most exacting users.

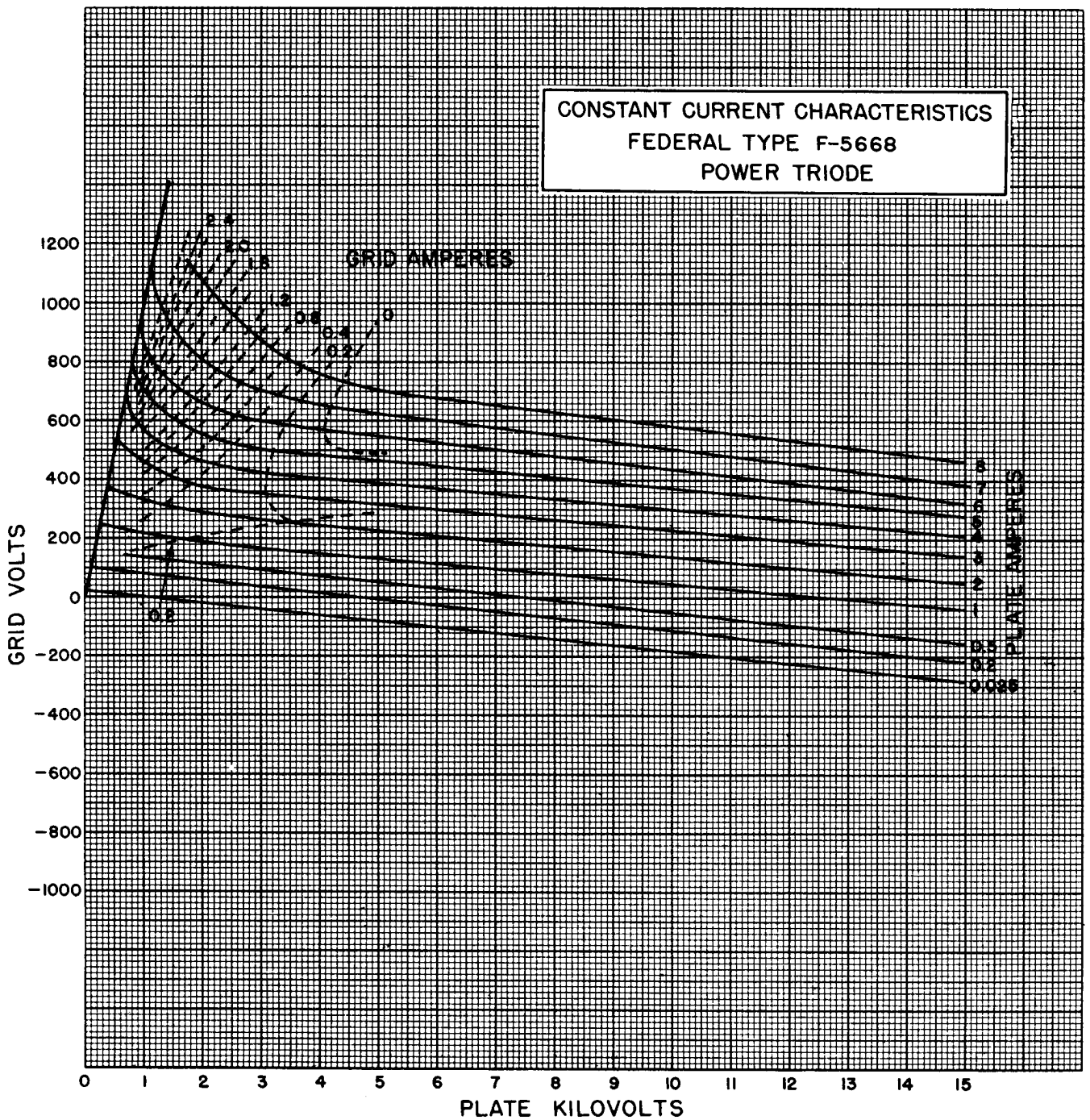

Form F-610 Printed in U. S. A.

Federal Telephone and Radio Company
100 Kingsland Road VACUUM TUBE DEPARTMENT Clifton, New Jersey

FEDERAL POWER TRIODE
Type F-5669
10 Kilowatts Plate Dissipation

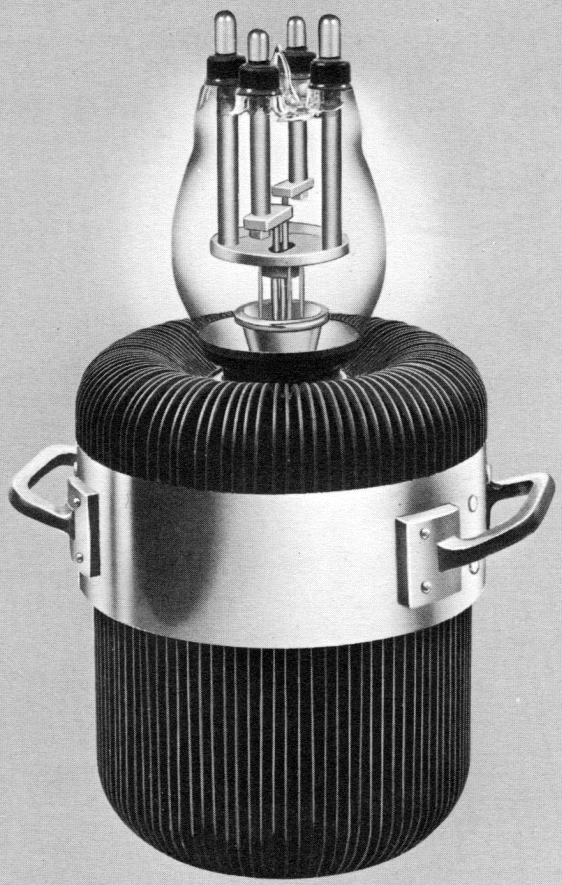

GENERAL DATA

DESCRIPTION:

The F-5669 is a 3-electrode tube designed specifically for radio frequency heating service. In industrial applications, it replaces the Type F-892R without equipment modifications. The heavy wall anode is forced air-cooled and capable of dissipating 10 kilowatts. The tube incorporates rugged kovar plate, grid, and filament seals. The cathode is a pure tungsten filament. Maximum ratings apply up to 5 megacycles with operation up to 20 megacycles permissible at reduced ratings.

Electrical:

Filament Voltage	22 Volts
Filament Current	60 Amperes
Filament Starting Current	120 Amperes max.
Filament Cold Resistance	.031 Ohms
Peak Cathode Current	9.4 Amperes
Amplification Factor, at I_b=0.42 amps. E_c=—50 volts	50
Interelectrode Capacitances	
Grid-Plate	31 $\mu\mu$f
Grid-Filament	20 $\mu\mu$f
Plate-Filament	2 $\mu\mu$f

Mechanical:

Mounting Position—Vertical, Anode Down			
Type of Cooling—Forced Air Maximum Incoming Air Temperature			45° C
Required Air Flow on Anode Plate Dissipation			
(Kilowatts)	10	8	6
Air Flow—Cubic Feet Per Min.	700	500	350
Maximum Glass Temperature*			160° C
Max. Anode Temp.			230° C
Net Weight, Approximate			52 Pounds

*At frequencies above 3 MC/Sec air flow on the center of the dish by deflection of the anode cooling air or by a separate blower, which provides 35 CFM through a 3-inch diameter nozzle, may be required to keep the glass temperature below 160° C.

For Characteristic Curves see F-5668. Except for reduction of plate dissipation to 10 KW, Maximum Ratings and Typical Operation of F-5668 apply.

Copyright 1953, Federal Telephone and Radio Company

Federal Telephone and Radio Company

FEDERAL POWER TRIODE
Type F-5669
10 Kilowatts Plate Dissipation

Maximum Ratings vs. Operating Frequency

Frequency	5	12.5	20 Megacycles
Percentage of Maximum Rated Plate Voltage and Plate Input			
Class C — Telegraphy	100	75	50 Per Cent

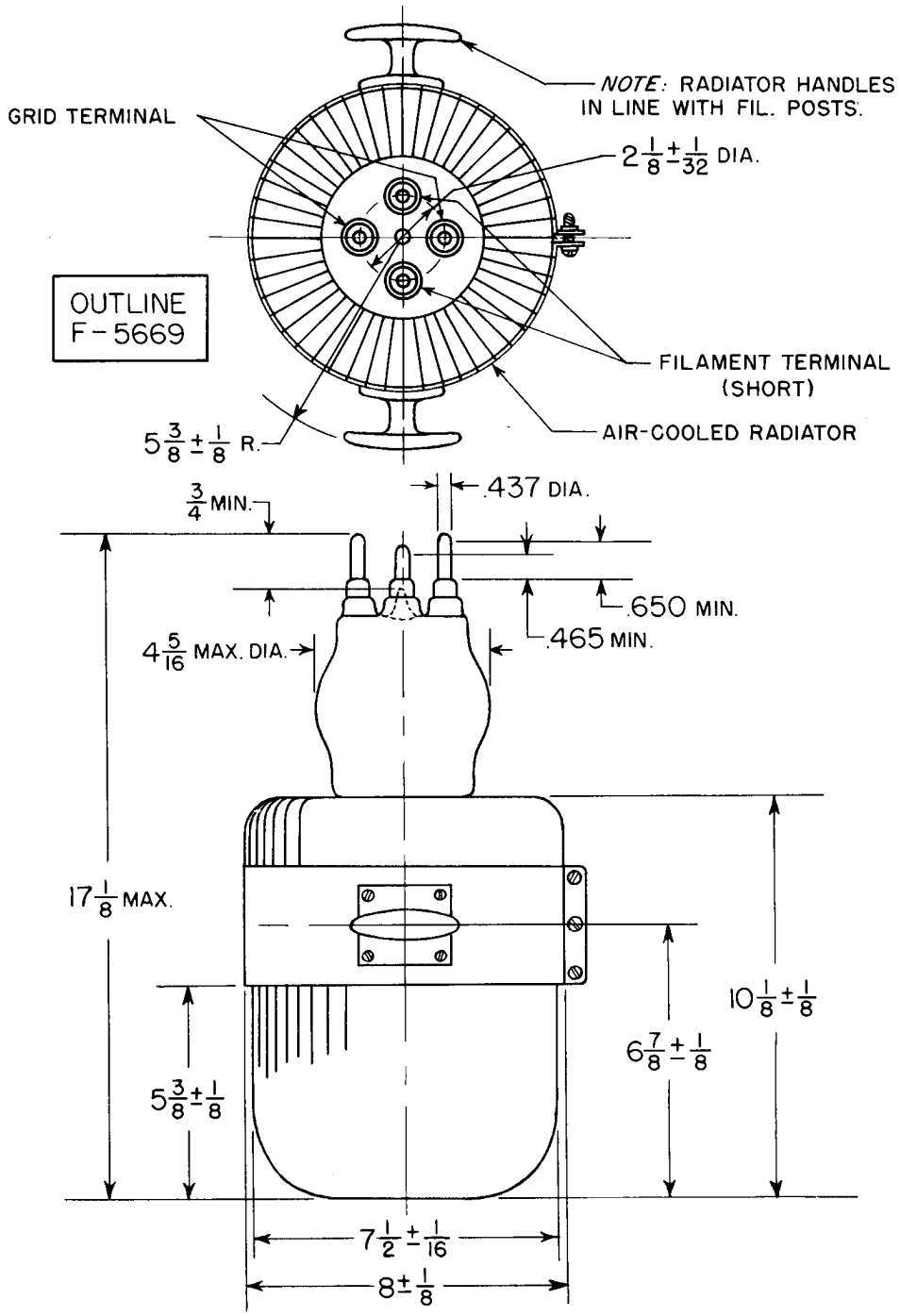

Form F-611 Printed in U. S. A.

Federal Telephone and Radio Company
100 Kingsland Road VACUUM TUBE DEPARTMENT Clifton, New Jersey

FEDERAL POWER TRIODE
Type F-5680
2.5 Kilowatts Plate Dissipation

GENERAL DATA

DESCRIPTION:

Federal's Type F-5680 is a three-electrode tube designed for use as a modulator, amplifier and oscillator. The relatively wide spacing between the elements, and the lack of internal insulators make this type tube especially suitable for high voltage pulse applications. The anode is air-cooled, capable of dissipating 2.5 kilowatts. The cathode is a thoriated tungsten filament. Maximum ratings apply up to 30 megacycles. Operation up to 50 megacycles is permissible at reduced ratings.

Electrical:

Filament Voltage	13.0 Volts
Filament Current	36 Amperes
Filament Starting Current	72 Amperes
Filament Cold Resistance	.040 Ohms
Amplification Factor, Ec = −200 V, Ib = 0.2A	25
Interelectrode Capacitances	
Grid-Plate	12.0 *uuf*
Grid-Filament	15.0 *uuf*
Plate-Filament	1.8 *uuf*

Mechanical:

Mounting Position—Vertical, Anode Down			
Type of Cooling—Forced Air			
Maximum Incoming Air Temperature			45° C
Required Air Flow on Anode			
Plate Dissipation (Kilowatts)	2.5	2.0	1.5
Air Flow—Cubic Feet Per Min.	150	120	90
Pressure—Inches Water	2.5	1.6	0.9
Maximum Glass Temperature			150° C
Net Weight, Approximate			5¼ Pounds

Copyright 1950, Federal Telephone and Radio Corporation

FEDERAL POWER TRIODE
Type F-5680
2.5 Kilowatts Plate Dissipation

Maximum Ratings vs. Operating Frequency		
Frequency	30	50 Megacycles
Percentage of Maximum Rated Plate Voltage and Plate Input Class C—Telegraphy	100	75 Per Cent

Maximum Ratings and Typical Operating Conditions

AUDIO-FREQUENCY POWER AMPLIFIER AND MODULATOR—CLASS B

Maximum Ratings, Absolute Values

DC Plate Voltage	6,000 Volts
Maximum Signal DC Plate Current*	2.0 Amperes
Maximum Signal Plate Input*	6.0 Kilowatts
Plate Dissipation*	2.5 Kilowatts

Typical Operation

(Unless otherwise specified, values are for two tubes)

DC Plate Voltage	5,000 Volts
DC Grid Voltage	—150 Volts
Peak A-F Grid-to-Grid Voltage	1,260 Volts
Zero Signal DC Plate Current	0.4 Amperes
Maximum Signal DC Plate Current	2.25 Amperes
Effective Load Resistance, Plate to Plate	4,000 Ohms
Maximum Signal Driving Power, Approximate	175 Watts
Maximum Signal Power Output, Approximate	7.2 Kilowatts

*Averaged over any audio-frequency cycle of sine-wave form.

RADIO-FREQUENCY POWER AMPLIFIER—CLASS B

(Carrier conditions per tube for use with a maximum modulation factor of 1.0)

Maximum Ratings, Absolute Values

DC Plate Voltage	6,000 Volts
DC Plate Current	1.5 Amperes
Plate Input	3.75 Kilowatts
Plate Dissipation	2.5 Kilowatts

Typical Operation

DC Plate Voltage	6,000 Volts
DC Grid Voltage	—160 Volts
Peak R-F Grid Voltage	300 Volts
DC Plate Current	0.56 Amperes
DC Grid Current, Approximate	0.0 Amperes
Driving Power, Approximate**	47 Watts
Power Output, Approximate	1 Kilowatt

**At crest of audio-frequency cycle with modulation factor of 1.0

PLATE-MODULATED RADIO-FREQUENCY POWER AMPLIFIER—CLASS C TELEPHONY

(Carrier conditions per tube for use with a maximum modulation factor of 1.0)

Maximum Ratings, Absolute Values

DC Plate Voltage	5,000 Volts
DC Grid Voltage	—2,000 Volts
DC Plate Current	1.5 Amperes
DC Grid Current	0.2 Amperes
Plate Input	7.5 Kilowatts
Plate Dissipation	1.6 Kilowatts

Typical Operation

DC Plate Voltage	5,000 Volts
DC Grid Voltage	—800 Volts
Peak R-F Grid Voltage	1,370 Volts
DC Plate Current	0.74 Amperes
DC Grid Current, Approximate	0.10 Amperes
Driving Power, Approximate	130 Watts
Power Output, Approximate	2.7 Kilowatts

RADIO-FREQUENCY POWER AMPLIFIER AND OSCILLATOR—CLASS C TELEGRAPHY

(Key-down conditions per tube without amplitude modulation)†

Maximum Ratings, Absolute Values

DC Plate Voltage	6,000 Volts
DC Grid Voltage	—2,000 Volts
DC Plate Current	2.0 Amperes
DC Grid Current	0.2 Amperes
Plate Input	12 Kilowatts
Plate Dissipation	2.5 Kilowatts

Typical Operation

DC Plate Voltage	6,000 Volts
DC Grid Voltage	—800 Volts
Peak R-F Grid Voltage	1,510 Volts
DC Plate Current	1.4 Amperes
DC Grid Current, Approximate	0.16 Amperes
Driving Power, Approximate	225 Watts
Power Output, Approximate	6 Kilowatts

†Modulation essentially negative may be used if the positive peak of the envelope does not exceed 115 per cent of the carrier conditions.

RADIO FREQUENCY POWER AMPLIFIER AND OSCILLATOR—PULSED OPERATION

Maximum Ratings, Absolute Values

DC Plate Voltage	17,500 Volts
DC Grid Voltage	—5,000 Volts
Peak Cathode Current	35 Amperes
Plate Dissipation‡	1.2 Kilowatts
Duty Cycle	.030

‡Air Flow=75 CFM

Typical Operation

DC Plate Voltage	15,500 Volts
DC Grid Voltage (during pulse)	—750 Volts
DC Plate Current	0.20 Amperes
DC Grid Current	.013 Amperes
Duty Cycle	.023
Peak Power Output	90 Kilowatts

NOW
5771/356

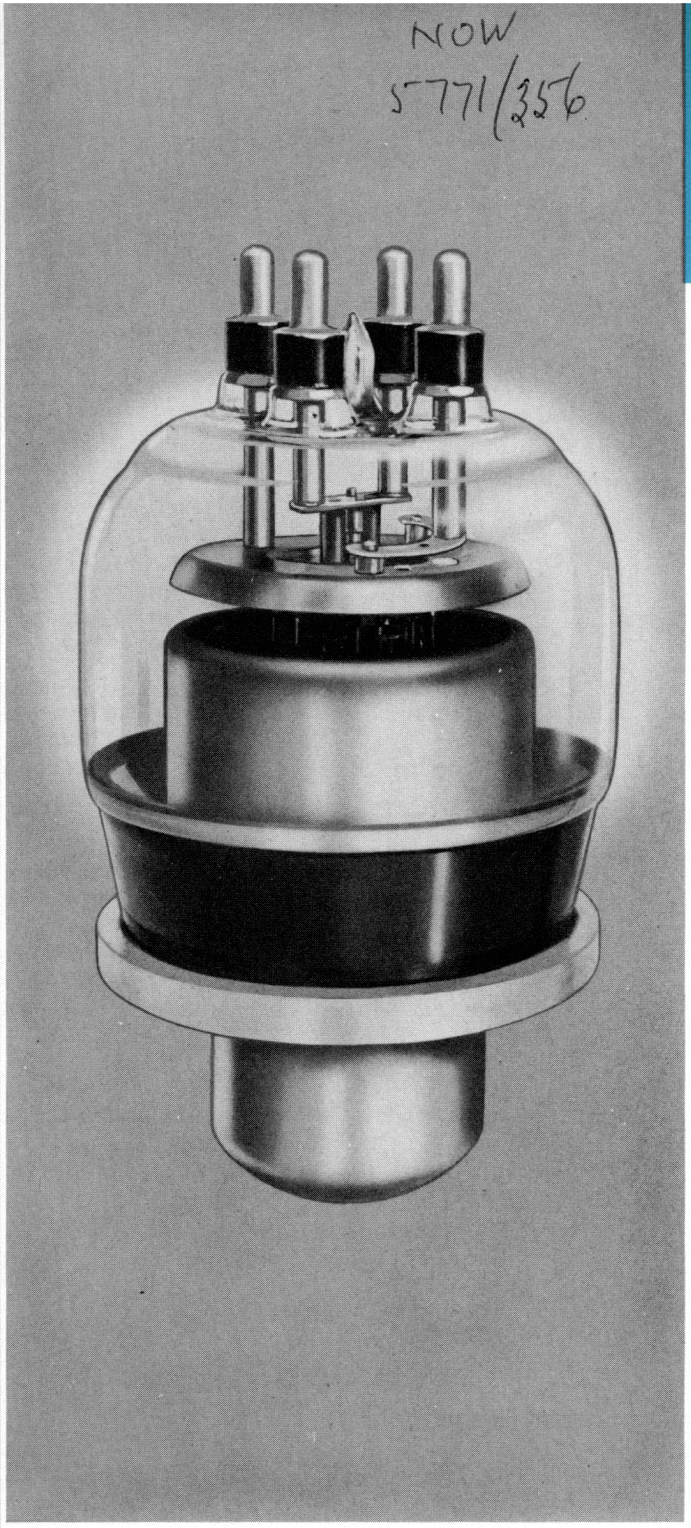

FEDERAL POWER TRIODE
Type F-5771
22.5 Kilowatts Plate Dissipation

GENERAL DATA

DESCRIPTION:

Federal's F-5771 is a three-electrode tube built for use as a radio-frequency amplifier, oscillator, or a Class B modulator. The anode is water-cooled, capable of dissipating 22.5 kilowatts. The cathode is a thoriated tungsten filament. The design of the terminal mount connections and the re-entrant anode minimizes lead inductance, makes the tube particularly suitable for high-frequency applications up to 25 megacycles at full ratings, 50 megacycles at reduced ratings.

Electrical:

Filament Voltage	7.5	Volts
Filament Current	170	Amperes
Filament Starting Current	800	Amperes max.
Filament Cold Resistance	.0055	Ohms
Amplification Factor, at I_b = 2.0 amps., E_c = —100 volts	20	
Interelectrode Capacitances		
Grid-Plate	24.5	$\mu\mu$f
Grid-Filament	47	$\mu\mu$f
Plate-Filament	3	$\mu\mu$f

Mechanical:

Mounting Position— Vertical, anode down		
Type of Cooling— Water and Forced Air		
Water Flow on Anode	20	GPM
Maximum Outgoing Water Temperature	70°	C
Air Flow (to bulb and seals) from a 3-inch diameter nozzle	20	CFM
Maximum Glass Temperature	180°	C
Maximum Seal Temperature	165°	C
Net Weight, approximate	7	Pounds

From raw materials to the finished product, every Federal vacuum tube is checked and double-checked to assure the utmost in electrical and mechanical perfection.

Copyright 1951, Federal Telephone and Radio Corporation

FEDERAL POWER TRIODE
Type F-5771
22.5 Kilowatts Plate Dissipation

Maximum Ratings vs. Operating Frequency

Frequency	1.6	25	50 Megacycles
Percentage of Maximum Rated Plate Voltage and Plate Input			
Class B—	100	100	75 Per Cent
Class C—Plate Modulated	100	100	75 Per Cent
Class C—Unmodulated			
Max. Plate Voltage	120	100	75 Per Cent
Max. Plate Input	112.5	100	75 Per Cent

Maximum Ratings and Typical Operating Conditions

AUDIO-FREQUENCY POWER AMPLIFIER AND MODULATOR—CLASS B

Maximum Ratings, Absolute Values

DC Plate Voltage	12,500 Volts
Maximum Signal DC Plate Current†	5 Amperes
Maximum Signal Plate Input†	45 Kilowatts
Plate Dissipation†	22.5 Kilowatts

Typical Operation

(Unless otherwise specified, values are for two tubes)

DC Plate Voltage	12,500 Volts
DC Grid Voltage	—600 Volts
Peak A-F Grid-to-Grid Voltage	1,900 Volts
Zero Signal DC Plate Current	1.0 Amperes
Maximum Signal DC Plate Current	6.4 Amperes
Effective Load Resistance, Plate to Plate	4,400 Ohms
Maximum Signal Driving Power, approximate	430 Watts
Maximum Signal Power Output, approximate	55 Kilowatts

†Averaged over any audio frequency cycle of sine-wave form.

RADIO-FREQUENCY POWER AMPLIFIER—CLASS B

(Carrier conditions per tube for use with a maximum modulation factor of 1.0)

Maximum Ratings, Absolute Values

DC Plate Voltage	12,500 Volts
DC Plate Current	4 Amperes
Plate Input	33 Kilowatts
Plate Dissipation	22.5 Kilowatts

Typical Operation

DC Plate Voltage	12,500 Volts
DC Grid Voltage	—625 Volts
Peak R-F Grid Voltage	625 Volts
DC Plate Current	2.4 Amperes
DC Grid Current, approximate	0 Amperes
Driving Power, approximate‡	1 Kilowatt
Power Output, approximate	12 Kilowatts

‡At crest of audio-frequency cycle with modulation factor of 1.0.

PLATE-MODULATED RADIO-FREQUENCY POWER AMPLIFIER—CLASS C TELEPHONY

(Carrier conditions per tube for use with a maximum modulation factor of 1.0)

Maximum Ratings, Absolute Values

DC Plate Voltage	10,000 Volts
DC Grid Voltage	—1,600 Volts
DC Plate Current	4 Amperes
DC Grid Current	0.8 Amperes
Plate Input	40 Kilowatts
Plate Dissipation	15 Kilowatts

Typical Operation

DC Plate Voltage	10,000 Volts
DC Grid Voltage	—840 Volts
Peak R-F Grid Voltage	1,440 Volts
DC Plate Current	3.8 Amperes
DC Grid Current, approximate	0.78 Amperes
Driving Power, approximate	1 Kilowatt
Power Output, approximate	29 Kilowatts

RADIO-FREQUENCY POWER AMPLIFIER AND OSCILLATOR—CLASS C —TELEGRAPHY

(Key-down conditions per tube without amplitude Modulation)¶

Maximum Ratings, Absolute Values

DC Plate Voltage	12,500	15,000*	Volts
DC Grid Voltage	—1,600	—1,600*	Volts
DC Plate Current	6	6*	Amperes
DC Grid Current	0.8	0.8*	Amperes
Plate Input	60	67.5*	Kilowatts
Plate Dissipation	22.5	22.5*	Kilowatts

Typical Operation

DC Plate Voltage	10,000	12,500	15,000	Volts
DC Grid Voltage	—770	—630	—990	Volts
Peak R-F Grid Voltage	1,440	1,230	1,620	Volts
DC Plate Current	6	4.8	4.5	Amperes
DC Grid Current, approximate	0.77	0.75	0.8	Amperes
Driving Power, approximate	1	1	1.2	Kilowatts
Power Output, approximate	40	44	53	Kilowatts

¶Modulation essentially negative may be used if the positive peak of the envelope does not exceed 115 per cent of carrier conditions.

*These ratings apply only at a frequency of 1,500 kilocycles or less.

Federal tubes of all types are in service around the world . . . delivering the high calibre performance for which they were designed.

FEDERAL POWER TRIODE
Type F-5771
22.5 Kilowatts Plate Dissipation

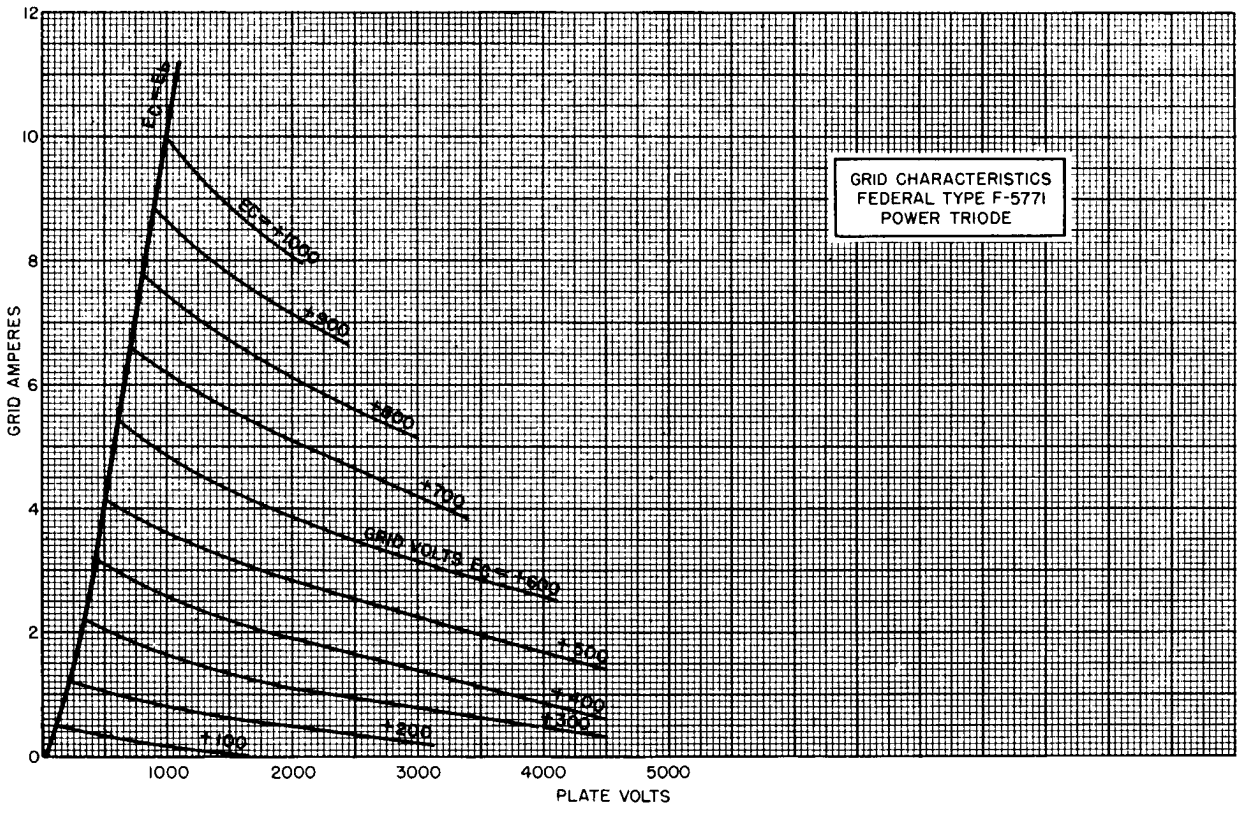

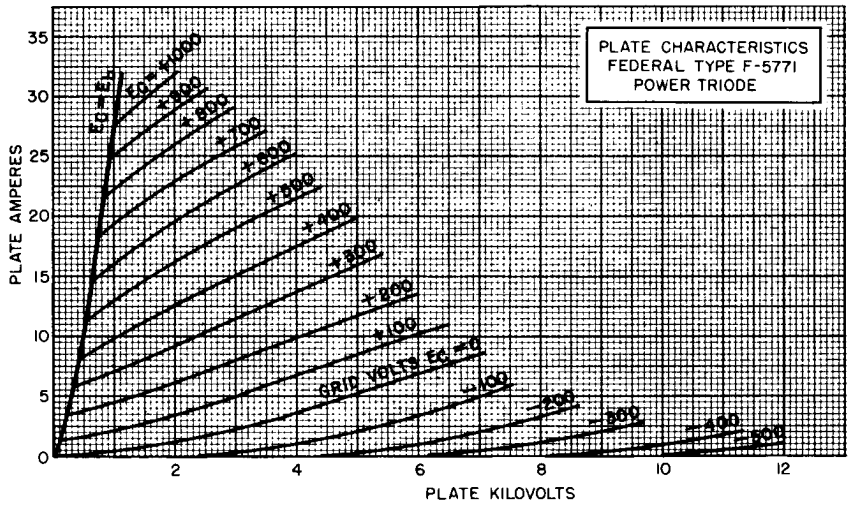

An IT&T Associate

FEDERAL POWER TRIODE
Type F-5771
22.5 Kilowatts Plate Dissipation

Backed by years of engineering and manufacturing experience, Federal tubes have consistently set the world's *standards of performance* in broadcast service.

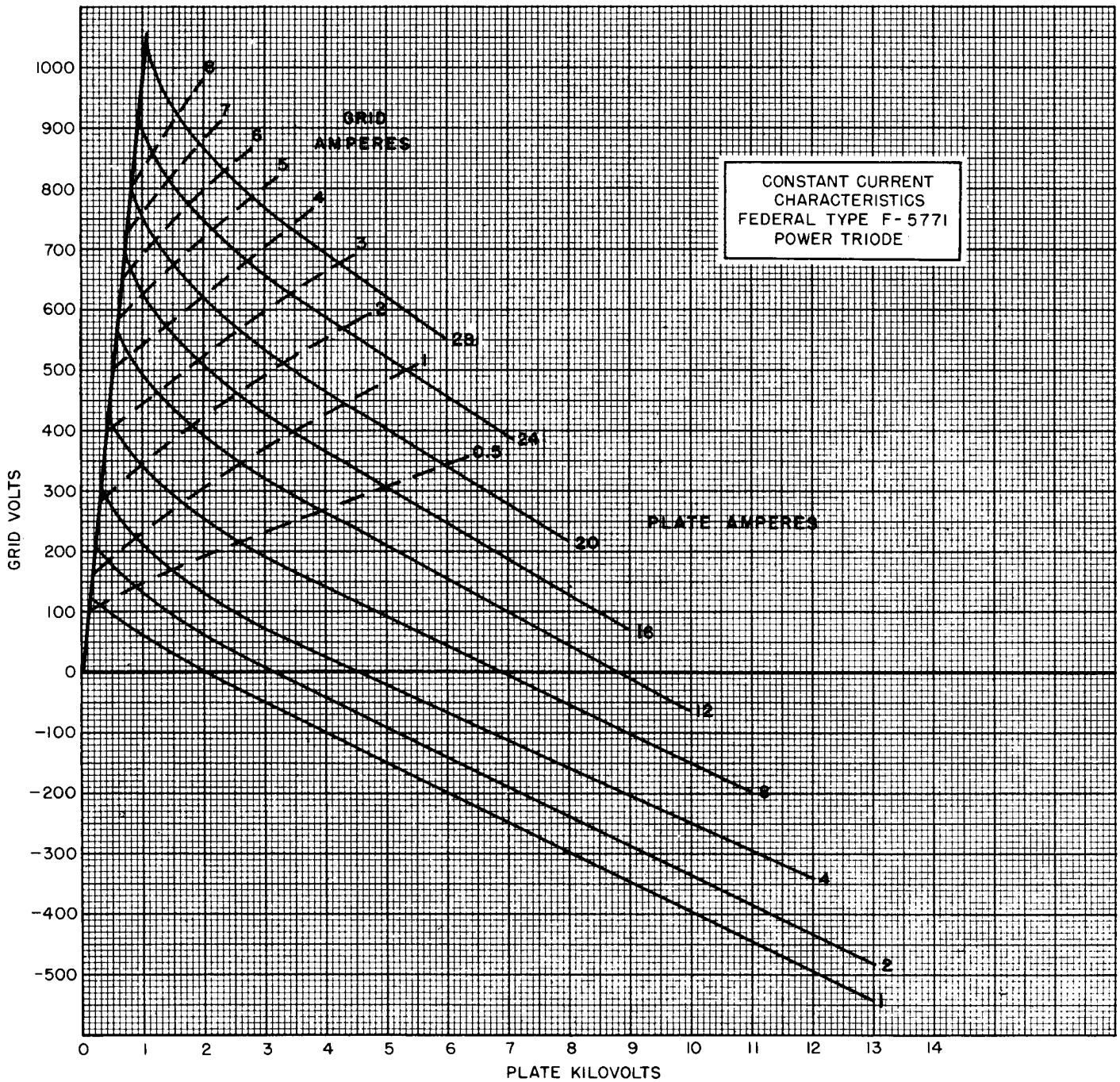

AN IT&T ASSOCIATE

Federal vacuum tubes are designed for long service life and maintenance of original characteristics, and produced with all the care and precision of fine craftsmanship.

FEDERAL POWER TRIODE
Type F-5771
22.5 Kilowatts Plate Dissipation

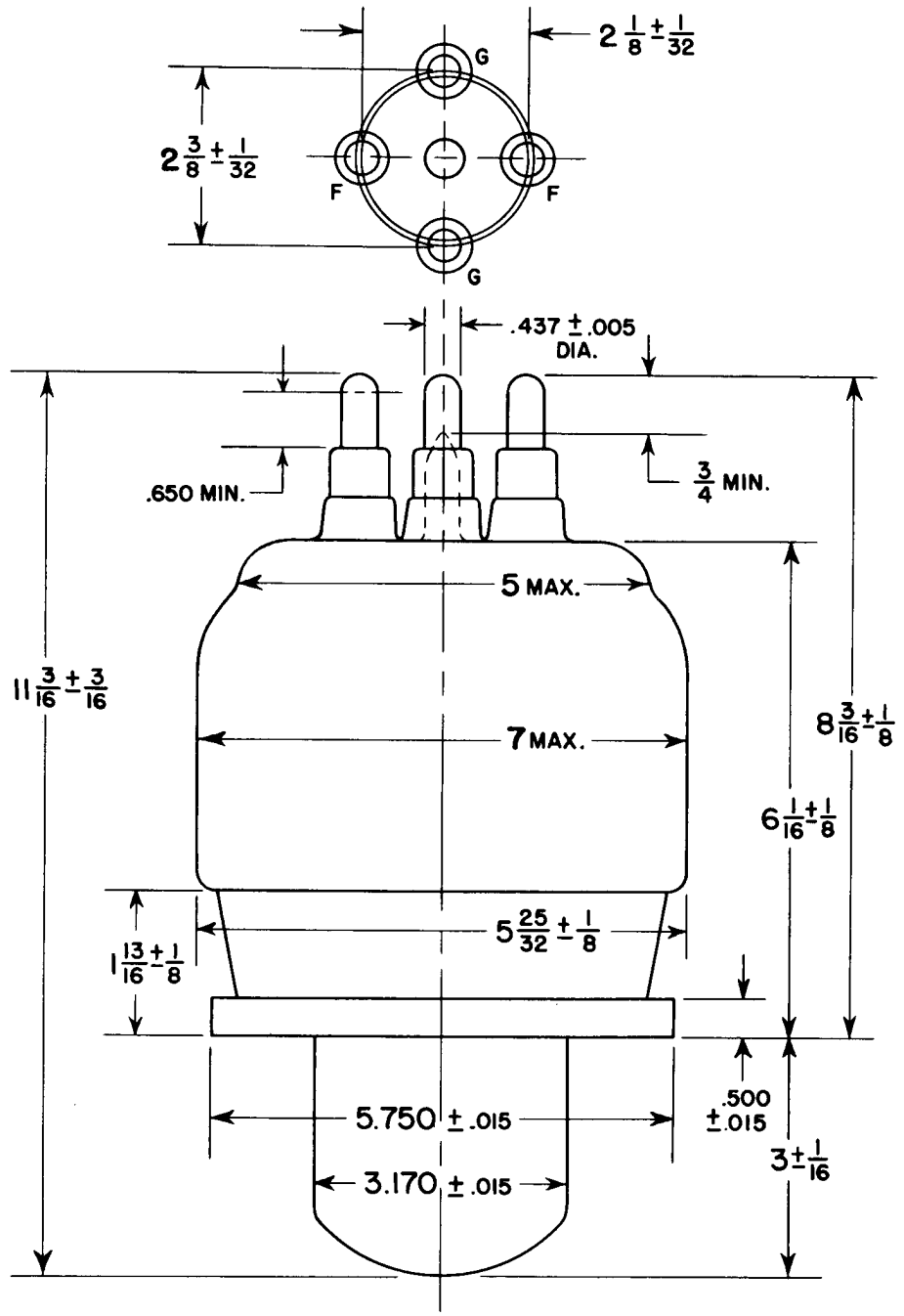

OUTLINE DRAWING
F – 5771

Federal Telephone and Radio Corporation
100 Kingsland Road Clifton, New Jersey

An IT&T Associate

Federal Always Has
Made Better Tubes

Printed in U. S. A.—Form F-482

FEDERAL POWER TRIODE
Type F-5918-A
70 Kilowatts Plate Dissipation

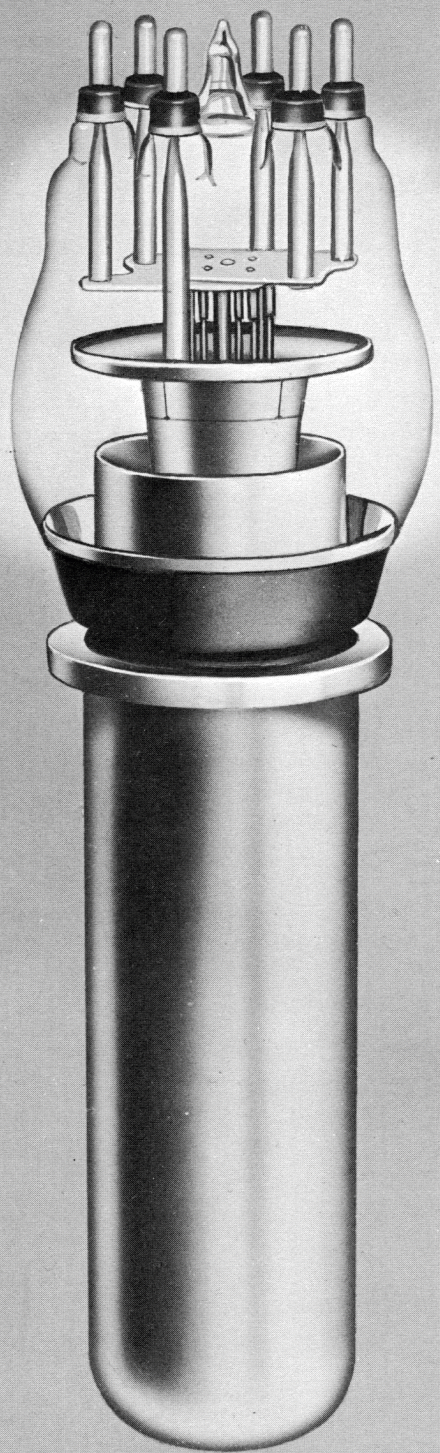

GENERAL DATA

DESCRIPTION:

Federal's F-5918-A is a three-electrode tube designed for use as radio-frequency amplifier, oscillator, or Class B modulator. The anode is water-cooled, capable of dissipating 70 kilowatts. The cathode is a thoriated tungsten filament. Maximum ratings apply up to 22 megacycles.

Electrical:

▶ Filament Voltage	11	Volts
▶ Filament Current	285	Amperes
▶ Filament Starting Current	1000	Amperes max.
▶ Filament Cold Resistance	.005	Ohms
▶ Peak Cathode Current	100	Amperes
▶ Amplification Factor, at $I_b = 2$ amps. $E_b = -200$ volts	37	
▶ Interelectrode Capacitances		
Grid-Plate	34.5	$\mu\mu$f
Grid-Filament	75	$\mu\mu$f
Plate-Filament	2.4	$\mu\mu$f

Mechanical:

▶ Mounting Position— Vertical, Anode Down		
▶ Type of Cooling—Water		
Water Flow on Anode	30	GPM
Maximum Outgoing Water Temperature	70°	C
Maximum Glass Temperature	150°	C
▶ Net Weight, approximate	25	Lbs.

Copyright 1953, Federal Telephone and Radio Company

FEDERAL POWER TRIODE
Type F-5918-A
70 Kilowatts Plate Dissipation

The F-5918-A has given *proven* service in 200 KW plate modulated short-wave transmitters.

Maximum Ratings and Typical Operating Conditions

AUDIO-FREQUENCY POWER AMPLIFIER AND MODULATOR—CLASS B

Maximum Ratings, Absolute Values

DC Plate Voltage	17,500 Volts
Maximum Signal DC Plate Current†	15 Amperes
Maximum Signal Plate Input†	175 Kilowatts
Plate Dissipation†	70 Kilowatts

Typical Operation

(Unless otherwise specified, values are for two tubes)

DC Plate Voltage	14,000 Volts
DC Grid Voltage	—300 Volts
Peak A-F Grid-to-Grid Voltage	1,600 Volts
Zero Signal DC Plate Current	2 Amperes
Maximum Signal DC Plate Current	16 Amperes
Effective Load Resistance, Plate to Plate	2,250 Ohms
Max. Sig. Driving Power, approx.	1,500 Watts
Max. Sig. Power Output, approx.	150 Kilowatts

†Averaged over any audio frequency cycle of sine-wave form.

RADIO-FREQUENCY POWER AMPLIFIER—CLASS B

(Carrier conditions per tube for use with a maximum modulation factor of 1.0)

Maximum Ratings, Absolute Values

DC Plate Voltage	17,500 Volts
DC Plate Current	12 Amperes
Plate Input	100 Kilowatts
Plate Dissipation	70 Kilowatts

Typical Operation

DC Plate Voltage	15,000 Volts
DC Grid Voltage	—375 Volts
Peak R-F Grid Voltage	500 Volts
DC Plate Current	4.9 Amperes
DC Grid Current	0.0 Amperes
Driving Power, approximate‡	770 Watts
Power Output, approximate	25 Kilowatts

‡At crest of audio-frequency cycle with modulation factor of 1.0.

PLATE-MODULATED RADIO-FREQUENCY POWER AMPLIFIER—CLASS C TELEPHONY

(Carrier conditions per tube for use with a maximum modulation factor of 1.0)

Maximum Ratings, Absolute Values

DC Plate Voltage	14,000 Volts
DC Grid Voltage	—3,000 Volts
DC Plate Current	12 Amperes
DC Grid Current	2 Amperes
Plate Input	165 Kilowatts
Plate Dissipation	47 Kilowatts

Typical Operation

DC Plate Voltage	14,000 Volts
DC Grid Voltage	—800 Volts
Peak R-F Grid Voltage	1,550 Volts
DC Plate Current	10 Amperes
DC Grid Current	1.4 Amperes
Driving Power, approximate	2 Kilowatts
Power Output, approximate	104 Kilowatts

RADIO-FREQUENCY POWER AMPLIFIER AND OSCILLATOR—CLASS C TELEGRAPHY

(Key-down conditions per tube without amplitude modulation)¶

Maximum Ratings, Absolute Values

DC Plate Voltage	17,500 Volts
DC Grid Voltage	—3,000 Volts
DC Plate Current	18 Amperes
DC Grid Current	2 Amperes
Plate Input	300 Kilowatts
Plate Dissipation	70 Kilowatts

Typical Operation

DC Plate Voltage	17,500 Volts
DC Grid Voltage	—1,000 Volts
Peak R-F Grid Voltage	1,960 Volts
DC Plate Current	13.8 Amperes
DC Grid Current, approximate	2 Amperes
Driving Power, approximate	3.6 Kilowatts
Power Output, approximate	180 Kilowatts

¶Modulation essentially negative may be used if the positive peak of the envelope does not exceed 115 per cent of carrier conditions.

The F-5918-A grid is especially treated for unusually high heat dissipation contributing to stability in operation.

FEDERAL POWER TRIODE
Type F-5918-A
70 Kilowatts Plate Dissipation

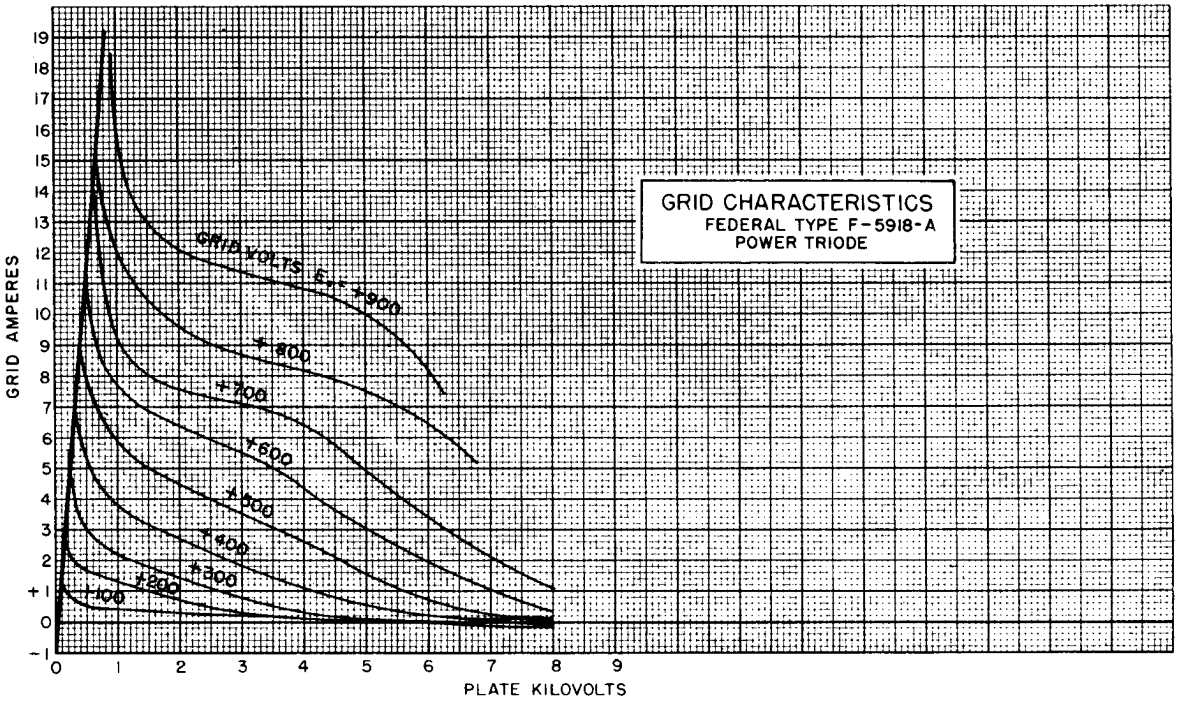

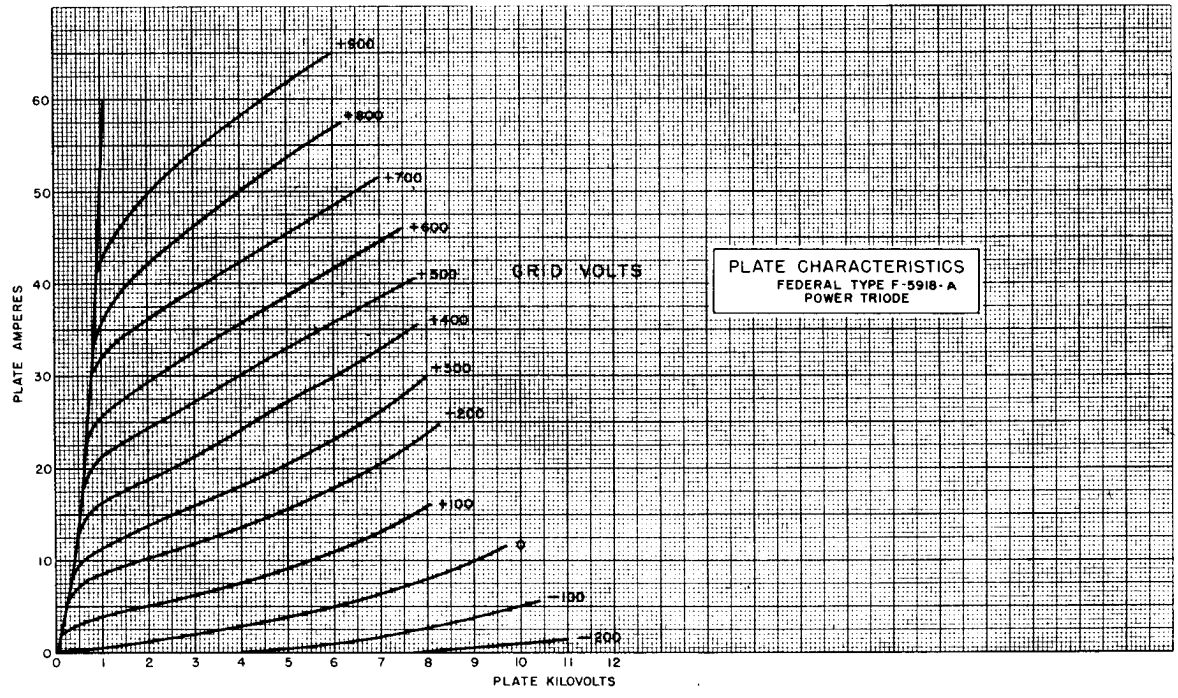

FEDERAL POWER TRIODE
Type F-5918-A
70 Kilowatts Plate Dissipation

Federal means longer tube life, finer performance, greater satisfaction, greater value for your tube dollar.

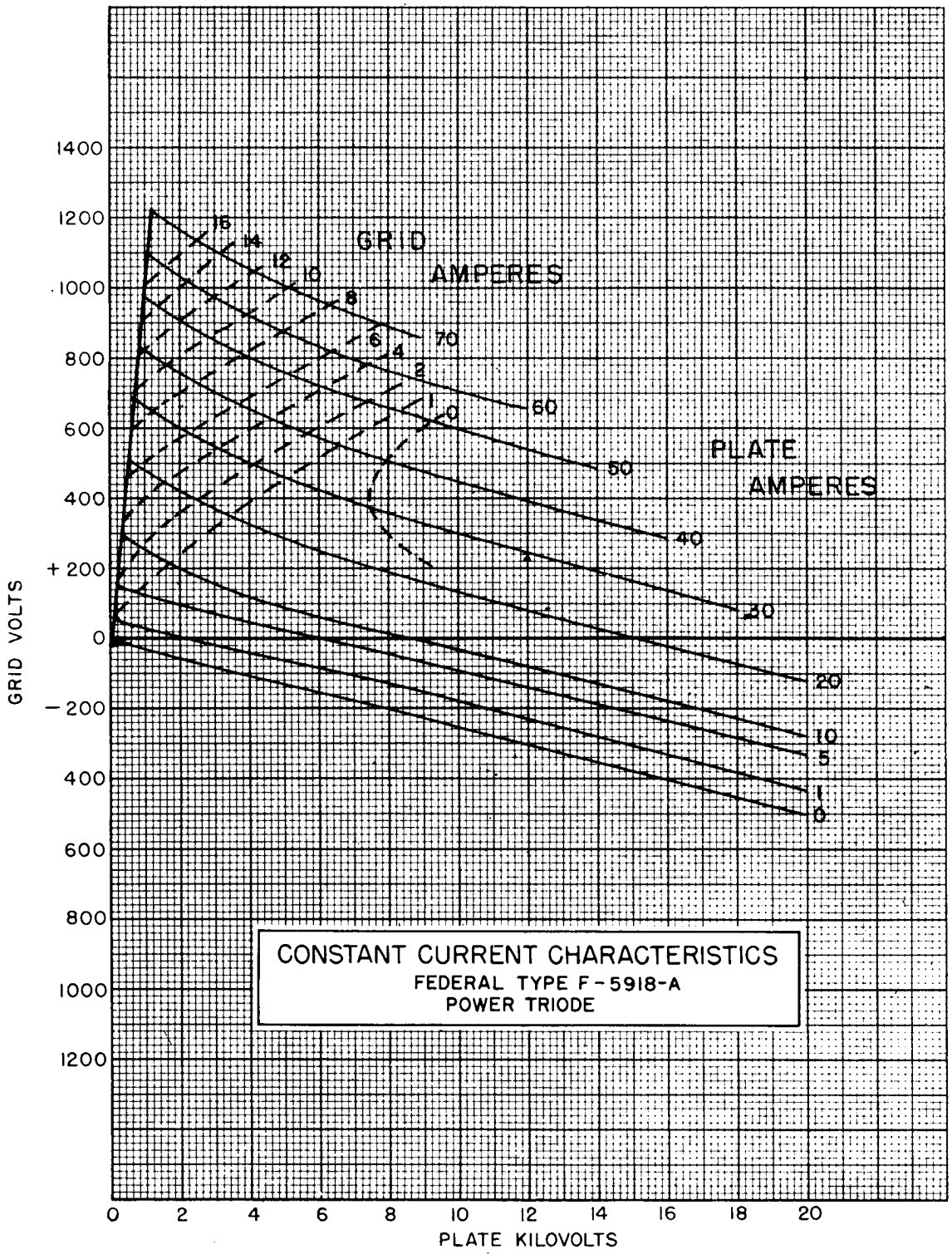

Kovar-to-glass seals throughout and heavy wall anode contribute to the electrical and mechanically rugged structure of the F-5918-A

FEDERAL POWER TRIODE
Type F-5918-A
70 Kilowatts Plate Dissipation

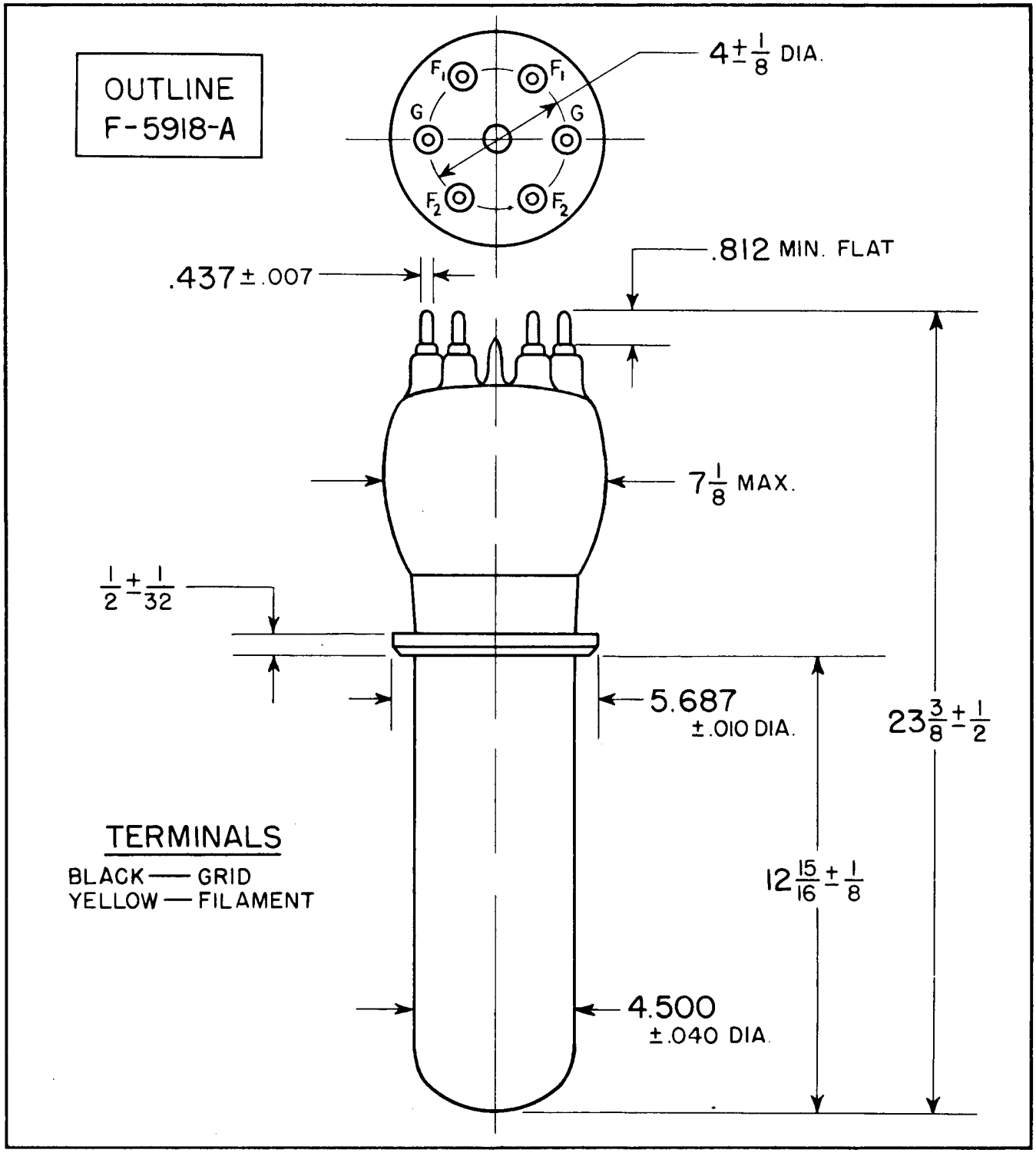

Federal Telephone and Radio Company
100 Kingsland Road VACUUM TUBE DEPARTMENT Clifton, New Jersey

Federal Always Has
Made Better Tubes

Form F-504-A Printed in U. S. A.

FEDERAL POWER TRIODE
Type F-5919
35 Kilowatts Plate Dissipation

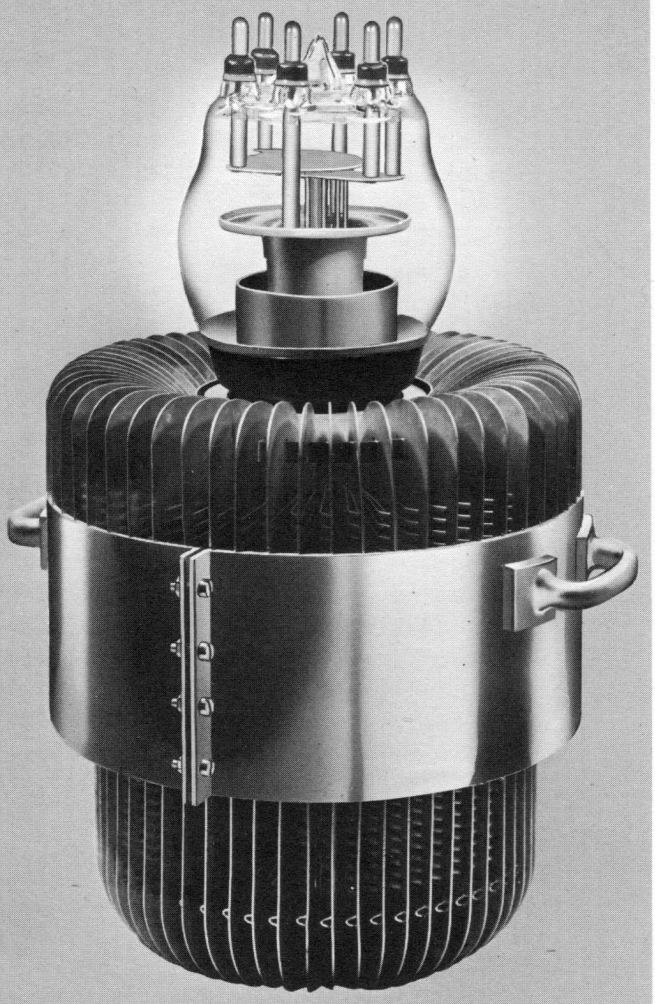

GENERAL DATA

DESCRIPTION:

Federal's F-5919 is a three-electrode tube designed for use as radio-frequency amplifier, oscillator, or Class B modulator. The anode is forced air-cooled, capable of dissipating 35 kilowatts. The cathode is a thoriated tungsten filament. Maximum ratings apply up to 22 megacycles.

Electrical:

Filament Voltage	11 Volts
Filament Current	285 Amperes
Filament Starting Current	1,000 Amperes max.
Filament Cold Resistance	.005 Ohms
Peak Cathode Current	100 Amperes
Amplification Factor, at I_b=2 amps. E_b=—200 volts	37
Interelectrode Capacitances	
Grid-Plate	34.5 $\mu\mu$f
Grid-Filament	75 $\mu\mu$f
Plate-Filament	2.6 $\mu\mu$f

Mechanical:

Mounting Position— Vertical, Anode Down	
Type of Cooling— Forced Air	
Air Flow	1800 CFM
Maximum Incoming Air Temperature	45° C
Maximum Glass Temperature	165° C

Copyright 1954, Federal Telephone and Radio Company

FEDERAL POWER TRIODE
Type F-5919
35 Kilowatts Plate Dissipation

The F-5919 enables single-ended design for a full 50 Kilowatt output.

Maximum Ratings and Typical Operating Conditions

AUDIO-FREQUENCY POWER AMPLIFIER AND MODULATOR—CLASS B

Maximum Ratings, Absolute Values

DC Plate Voltage	17,500 Volts
Maximum Signal DC Plate Current†	14 Amperes
Maximum Signal Plate Input†	175 Kilowatts
Plate Dissipation†	35 Kilowatts

Typical Operation

(Unless otherwise specified, values are for two tubes)

DC Plate Voltage	10,000 Volts
DC Grid Voltage	—220 Volts
Peak A-F Grid-to-Grid Voltage	820 Volts
Zero Signal DC Plate Current	0.6 Ampere
Maximum Signal DC Plate Current	5.8 Amperes
Effective Load Resistance, Plate to Plate	3,600 Ohms
Max. Sig. Driving Power, approx.	820 Watts
Max. Sig. Power Output, approx.	37 Kilowatts

†Averaged over any audio frequency cycle of sine-wave form.

PLATE-MODULATED RADIO-FREQUENCY POWER AMPLIFIER—CLASS C TELEPHONY

(Carrier conditions per tube for use with a maximum modulation factor of 1.0)

Maximum Ratings, Absolute Values

DC Plate Voltage	14,000 Volts
DC Grid Voltage	—3,000 Volts
DC Plate Current	12 Amperes
DC Grid Current	2 Amperes
Plate Input	100 Kilowatts
Plate Dissipation	24 Kilowatts

Typical Operation

DC Plate Voltage	10,000	11,000 Volts
DC Grid Voltage	—750	—900 Volts
Peak R-F Grid Voltage	1,360	1,500 Volts
DC Plate Current	6.6	5.7 Amperes
DC Grid Current	0.9	0.9 Ampere
Driving Power, approx.	1.2	1.3 Kilowatts
Power Output, approx.	50	50 Kilowatts

RADIO-FREQUENCY POWER AMPLIFIER AND OSCILLATOR—CLASS C TELEGRAPHY

(Key-down conditions per tube without amplitude modulation)¶

Maximum Ratings, Absolute Values

DC Plate Voltage	17,500 Volts
DC Grid Voltage	—3,000 Volts
DC Plate Current	14 Amperes
DC Grid Current	2 Amperes
Plate Input	175 Kilowatts
Plate Dissipation	35 Kilowatts

Typical Operation

DC Plate Voltage	10,000 Volts
DC Grid Voltage	—1,000 Volts
Peak R-F Grid Voltage	1,675 Volts
DC Plate Current	6.4 Amperes
DC Grid Current, approximate	1.1 Amperes
Driving Power, approximate	1.7 Kilowatts
Power Output, approximate	50 Kilowatts

¶Modulation essentially negative may be used if the positive peak of the envelope does not exceed 115 per cent of carrier conditions.

The F-5919 grid is especially treated for unusually high heat dissipation contributing to stability in operation.

FEDERAL POWER TRIODE
Type F-5919
35 Kilowatts Plate Dissipation

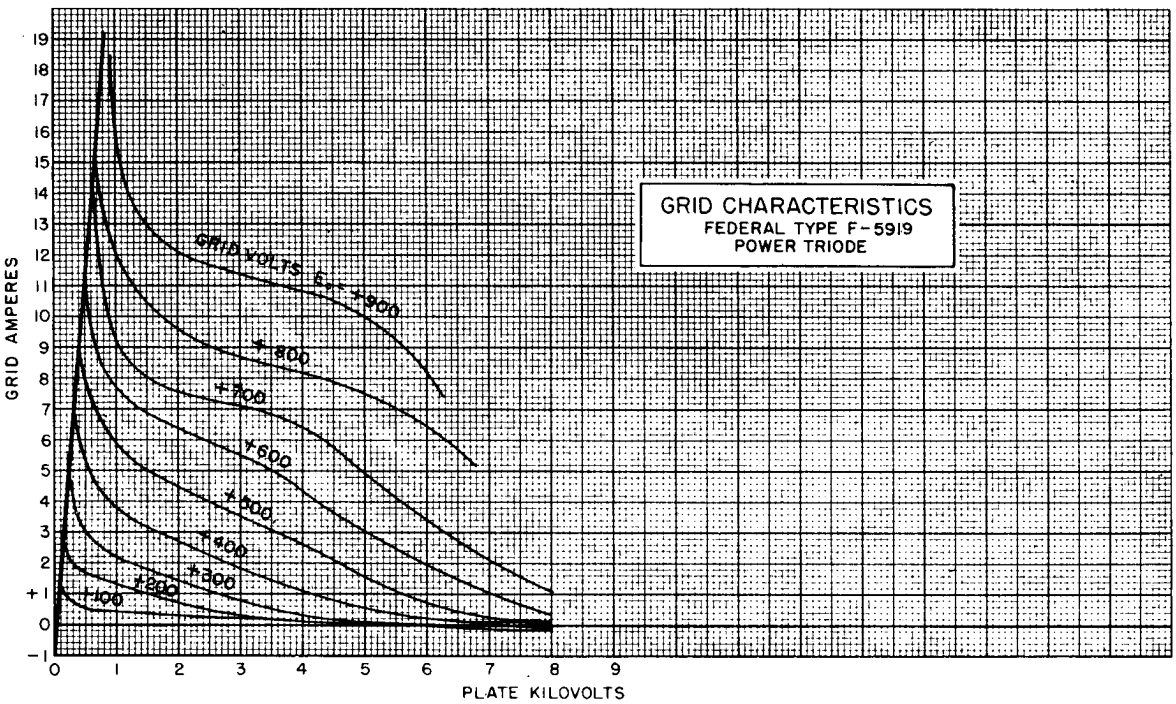

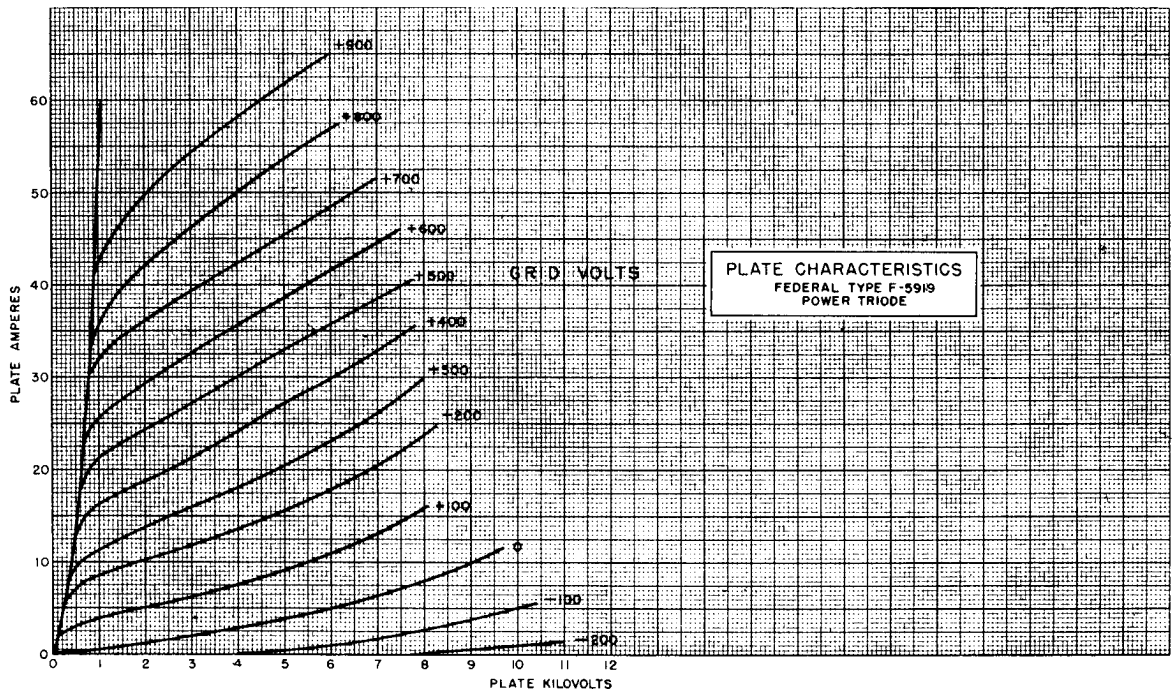

FEDERAL POWER TRIODE
Type F-5919
35 Kilowatts Plate Dissipation

Federal means longer tube life, finer performance, greater satisfaction, greater value for your tube dollar.

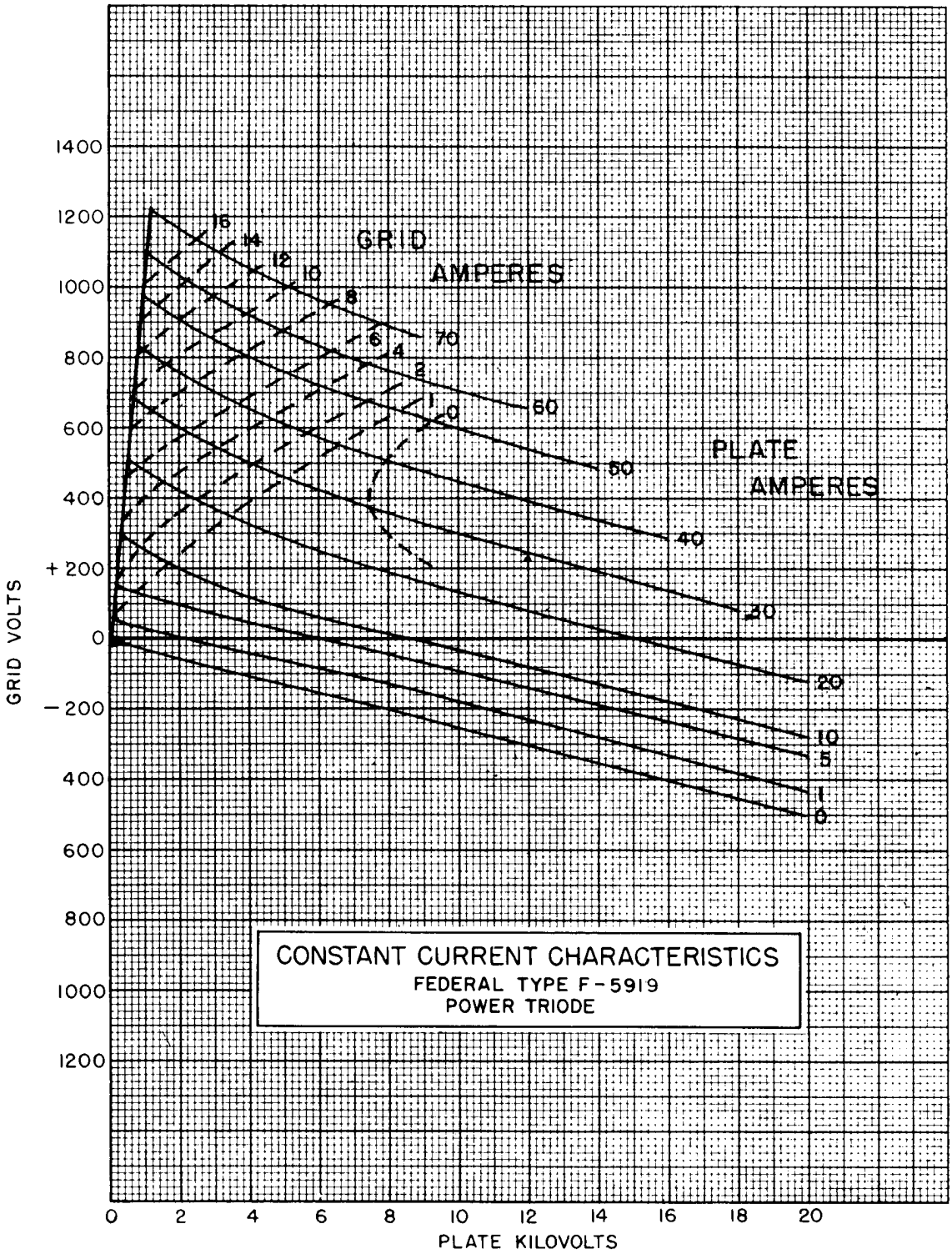

Kovar-to-glass seals throughout and heavy wall anode contribute to the electrical and mechanically rugged structure of the F-5919.

FEDERAL POWER TRIODE
Type F-5919
35 Kilowatts Plate Dissipation

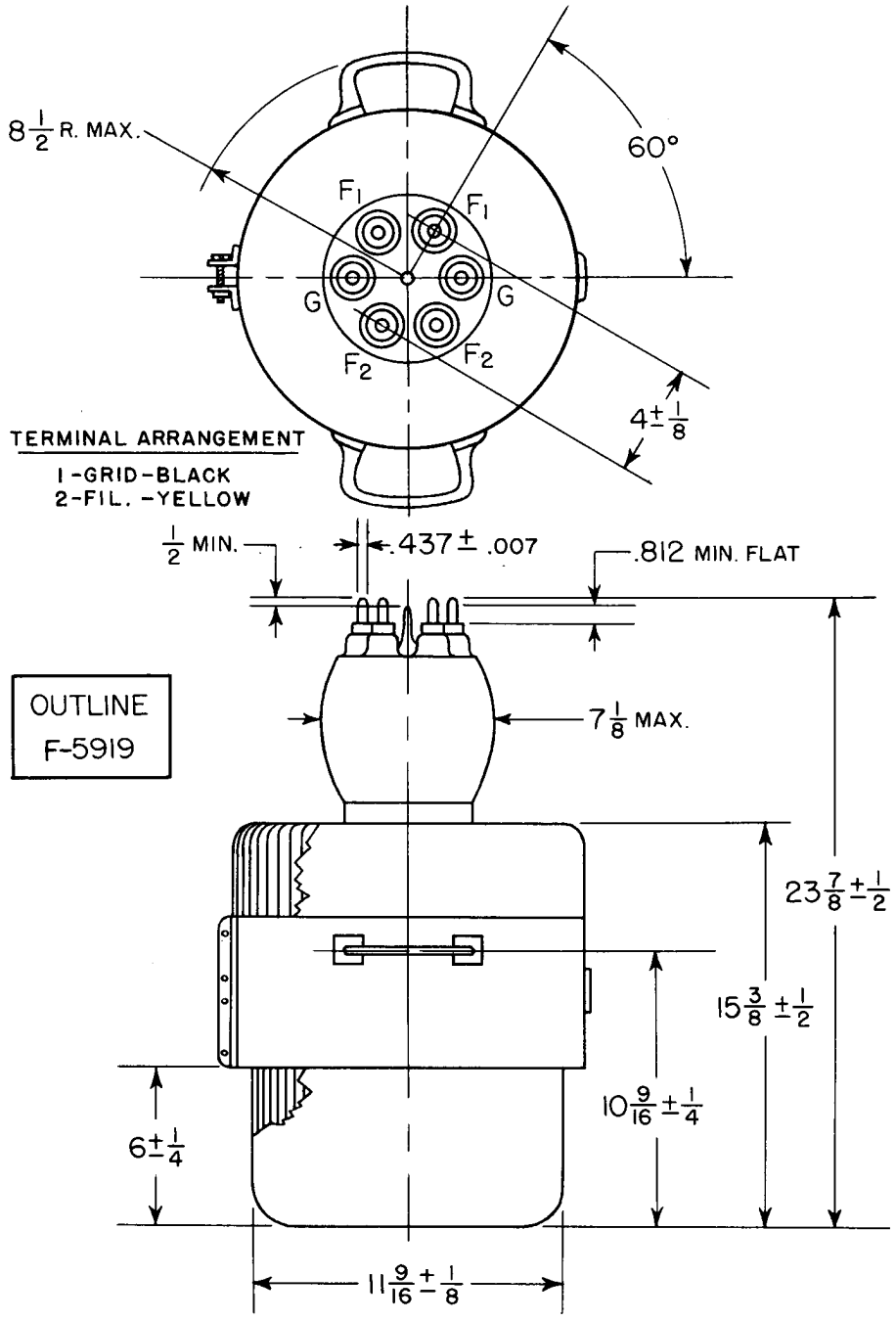

Federal Telephone and Radio Company
100 Kingsland Road VACUUM TUBE DEPARTMENT Clifton, New Jersey

Federal Always Has
Made Better Tubes

Form F-626 Printed in U.S.A.

FEDERAL POWER TRIODE
Type F-5996
2.5 Kilowatts Plate Dissipation

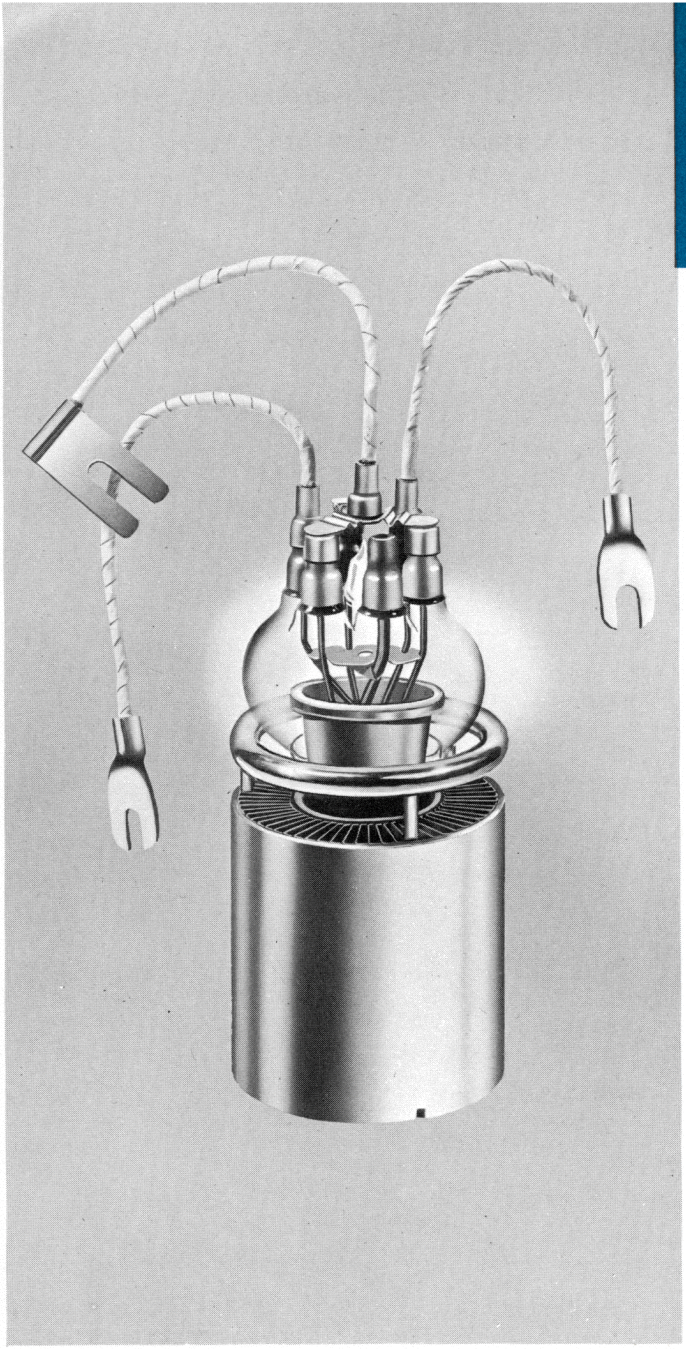

GENERAL DATA

DESCRIPTION:

Federal's Type F-5996 is a three-electrode tube designed for use as an industrial oscillator. The anode is forced air-cooled, capable of dissipating 2.5 kilowatts. The cathode is a thoriated tungsten filament. Maximum ratings apply up to 30 megacycles.

Electrical:

Filament Voltage	13.0 Volts
Filament Current	36 Amperes
Filament Starting Current	72 Amperes
Filament Cold Resistance	.040 Ohms
Amplification Factor, E_c=—200 V, Ib=0.2A	25
Interelectrode Capacitances	
Grid-Plate	12.0 $\mu\mu$f
Grid-Filament	15.0 $\mu\mu$f
Plate-Filament	1.8 $\mu\mu$f

Mechanical:

Mounting Position—Vertical, Anode Down			
Type of Cooling—Forced Air			
Maximum Incoming Air Temperature			45° C
Required Air Flow on Anode			
Plate Dissipation (Kilowatts)	2.5	2.0	1.5
Air Flow—Cubic Feet Per Min.	150	120	90
Pressure—Inches Water	2.5	1.6	0.9
Maximum Glass Temperature			150° C
Net Weight, Approximate			5¼ Pounds

For Maximum Ratings, Typical Operating Conditions, and Characteristic Curves, refer to Catalog Sheet F-5680. All values and ratings apply with the exception that the F-5996 is not recommended for pulsed operation.

Federal's Type F-5996 has been designed to meet the rugged operating conditions of industrial heating equipment.

Copyright 1953, Federal Telephone and Radio Company

Federal Telephone and Radio Company

FEDERAL POWER TRIODE
Type F-5996
2.5 Kilowatts Plate Dissipation

Federal's name on a tube means the *best* in design, engineering, materials, components, and craftsmanship.

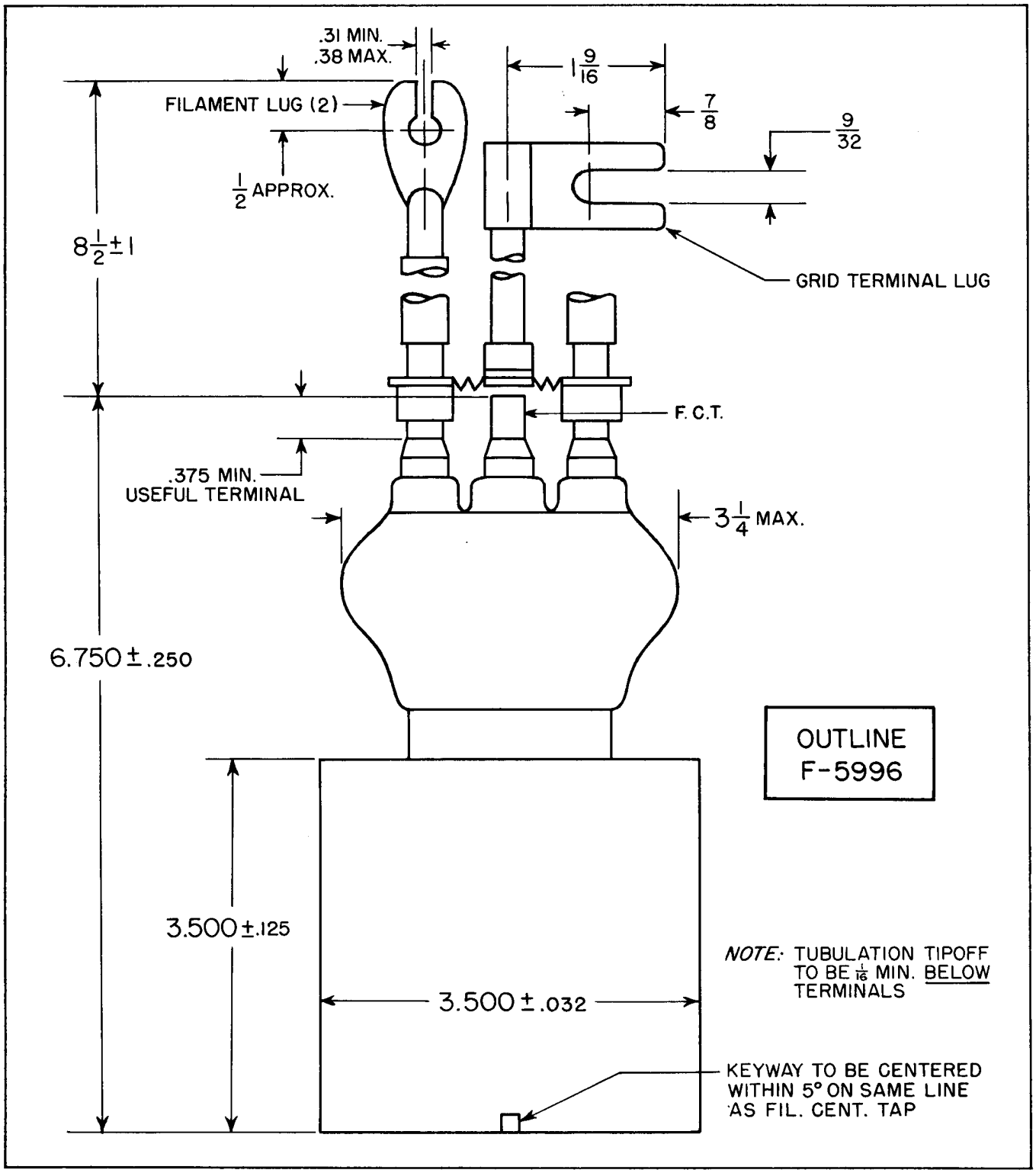

Form F-594 Printed in U. S. A.

DIVISION OF I T & T

Federal Telephone and Radio Company
100 Kingsland Road VACUUM TUBE DEPARTMENT Clifton, New Jersey

FEDERAL VHF POWER TETRODE
Type F-6166
10 Kilowatts Plate Dissipation

GENERAL DATA

DESCRIPTION:

The F-6166 by Federal is a power tetrode designed for VHF service in television and CW service. The anode is forced air cooled, capable of dissipating 10 kilowatts. The coaxial stem construction minimizes lead inductance and provides for easy insertion into coaxial cylinder type circuits.

Electrical:

▶ Filament, Thoriated Tungsten:	
Voltage (AC or DC)*	5.0 ± 5% Volts
Current at 5 volts	175 Amperes
Minimum Heating Time	15 Seconds
Cold Resistance	0.0038 Ohm
▶ Mu-Factor, Grid No. 2 to Grid No. 1 for plate volts=2000, grid No. 2 volts=1000, and plate amps. =2	10
▶ Direct Interelectrode Capacitances:	
Grid No. 1 to Plate**	0.6 Max. $\mu\mu$f
Grid No. 1 to Filament	44 $\mu\mu$f
Plate to Filament**	0.08 Max. $\mu\mu$f
Grid No. 1 to Grid No. 2	60 $\mu\mu$f
Grid No. 2 to Plate	23 $\mu\mu$f

Mechanical:

▶ Mounting Position— Vertical, filament end up or down	
▶ Maximum Overall Length	11-5/8"
▶ Maximum Diameter	6-13/32"
▶ Terminal Connections	See Outline Drawing
▶ Radiator	Integral part of tube
▶ Air Flow:	

THROUGH RADIATOR—The specified flow of incoming air at a temperature of 45°C for various plate dissipations, as indicated in the tabulation below, should be delivered by a blower through the radiator before and during the application of any voltages. The air should enter the radiator at its plate-contact-surface end (see Outline Drawing). Filament power, plate power, and air flow may be removed simultaneously.

Percentage of Max. Rated Plate Dissipation for Each Class of Service	100	80	60	per cent
Minimum Air Flow	350	270	200	cfm
Static Pressure	3	2.1	1.3	in. of water

TO GRID-No. 2 TERMINAL:

Plate-Ring End	†	
Grid-No. 1—Terminal End	50 min.	cfm

† A sufficient quantity of the air flow to the radiator should be directed onto the plate end of the grid-No. 2 terminal so that its temperature does not exceed the specified value.

TO GRID-No. 1 TERMINAL AND FILAMENT SEALS 50 min. cfm

* Full rated filament voltage can be applied safely to the cold filament. It is not necessary to provide means for limiting the filament starting current.

** With external flat metal shield 12" square having center hole 4-5/16" diameter. Shield is located in plane of the grid—No. 2 terminal, perpendicular to the tube axis, and is connected to grid No. 2.

Copyright 1955, Federal Telephone and Radio Company

FEDERAL VHF POWER TETRODE
Type F-6166
10 Kilowatts Plate Dissipation

Maximum Ratings vs. Operating Frequency

Frequency	30	220	Mc
Max. Permissible Percentage of Max. Rated Plate Voltage and Plate Input:			
Class B Television Service	Full Ratings—54 to 216 Mc		
Class C Television Service	Full Ratings—54 to 216 Mc		
Class C Telephony Service, Plate-Modulated	100	90	%
Class C Telegraphy and FM Telephony	100	90	%

▶ Incoming—Air Temperature	45 Max. °C
▶ Radiator Temperature (Measured on the core at end away from incoming air)	180 Max. °C
▶ Glass Temperature (At hottest part)	180 Max. °C
▶ Seal Temperature: Filament, Grid No. 1, Grid No. 2, and Plate	180 Max. °C
▶ Weight (Approx.)	15 Pounds

Maximum Ratings and Typical Operating Conditions

RF POWER AMPLIFIER—CLASS B TELEVISION SERVICE

Synchronizing—level conditions per tube unless otherwise specified
(Voltages are referred to cathode unless otherwise specified)

Maximum CCS① Ratings, Absolute Values:

	54 to 216 Mc
DC Plate Voltage	6,000 Max. Volts
DC Grid—No. 2 (Screen) Voltage	2,000 Max. Volts
DC Plate Current	4 Max. Amps
Plate Input	22,000 Max. Watts
Grid—No. 2 Input	400 Max. Watts
Plate Dissipation	10,000 Max. Watts
Grid—No. 1 (Control—Grid) Dissipation	300 Max. Watts

Typical Operation in Grid-Drive Circuit:

	Bandwidth②of 8.5 Mc
DC Plate Voltage	5800 Volts
DC Grid—No. 2 Voltage	1200 Volts
DC Grid—No. 1 Voltage	—130 Volts
Peak RF Grid—No. 1 Voltage:	
Synchronizing Level	375 Volts
Pedestal Level	290 Volts
DC Plate Current:	
Synchronizing Level	3.45 Amps
Pedestal Level	2.60 Amps
DC Grid—No. 2 Current (Pedestal Level)	0.207 Amp
DC Grid—No. 1 Current (Approx.):	
Synchronizing Level	0.350 Amp
Pedestal Level	0.170 Amp
Driver Power Output (Approx.):③	
Synchronizing Level	800④Watts
Pedestal Level	450 Watts
Power Output (Approx.):	
Synchronizing Level	12,000 Watts
Pedestal Level	6,800 Watts

Typical Operation in Cathode-Drive Circuit:

	Bandwidth②of 8.5 Mc
DC Plate Voltage	5,885 Volts
DC Grid—No. 2 Voltage	885 Volts
DC Cathode-to-Grid—No. 1 Voltage	85 Volts
Peak RF Cathode-to-Grid—No. 1 Voltage:	
Synchronizing Level	330 Volts
Pedestal Level	260 Volts
DC Plate Current:	
Synchronizing Level	3.45 Amps
Pedestal Level	2.60 Amps
DC Grid—No. 2 Current (Pedestal Level)	0.152 Amp
DC Grid—No. 1 Current (Approx.):	
Synchronizing Level	0.405 Amp
Pedestal Level	0.220 Amp
Driver Power Output (Approx.):⑤	
Synchronizing Level	1,300⑥Watts
Pedestal Level	700 Watts
Power Output (Approx.):	
Synchronizing Level	12,000 Watts
Pedestal Level	6,800 Watts

BIAS-MODULATED RF POWER AMPLIFIER—CLASS C TELEVISION SERVICE

Synchronizing—level conditions per tube unless otherwise specified

Maximum CCS① Ratings, Absolute Values:

	54 to 216 Mc
DC Plate Voltage	6,000 Max. Volts
DC Grid—No. 2 (Screen) Voltage	2,000 Max. Volts
DC Grid—No. 1 (Control—Grid) Voltage (White Level)	—1,000 Max. Volts
DC Plate Current	4 Max. Amps
Plate Input	22,000 Max. Watts
Grid—No. 2 Input	400 Max. Watts
Plate Dissipation	10,000 Max. Watts
Grid—No. 1 Dissipation	300 Max. Watts

Type F-6166 features high temperature gettering action that protects against momentary overloads.

FEDERAL VHF POWER TETRODE
Type F-6166
10 Kilowatts Plate Dissipation

Typical Operation in Grid-Drive Circuit:

	Bandwidth (2) of 8.5 Mc
DC Plate Voltage	5,800 Volts
DC Grid—No. 2 Voltage	1,200 Volts
DC Grid—No. 1 Voltage:	
Synchronizing Level	—130 Volts
Pedestal Level	—195 Volts
White Level	—350 Volts
Peak RF Grid—No. 1 Voltage	375 Volts
DC Plate Current:	
Synchronizing Level	3.45 Amps
Pedestal Level	2.42 Amps
DC Grid—No. 2 Current (Pedestal Level)	0.148 Amp
DC Grid—No. 1 Current (Approx.):	
Synchronizing Level	0.350 Amp
Pedestal Level	0.190 Amp
Driver Power Output (Approx.) (3) Synchronizing Level	800 (4) Watts
Power Output (Approx.):	
Synchronizing Level	12,000 Watts
Pedestal Level	6,800 Watts

PLATE-MODULATED RF POWER AMPLIFIER—CLASS C TELEPHONY

Carrier conditions per tube for use with a maximum modulation factor of 1.0

Maximum CCS (1) Ratings, Absolute Values: (7)

DC Plate Voltage	5,000 Max. Volts
DC Grid—No. 2 (Screen) Voltage	2,000 Max. Volts
DC Grid—No. 1 (Control—Grid) Voltage	—1,000 Max. Volts
DC Plate Current	2 Max. Amps
DC Grid—No. 1 Current	0.6 Max. Amp
Plate Input	10,000 Max. Watts
Grid—No. 2 Input	270 Max. Watts
Plate Dissipation	6,600 Max. Watts

Typical Operation in Grid-Drive Circuit:

	Up to 30 Mc
DC Plate Voltage	4,700 Volts
DC Grid—No. 2 Voltage (Modulated 100%) (8)	800 Volts
DC Grid—No. 1 Voltage (9)	—280 Volts
Peak RF Grid—No. 1 Voltage	485 Volts
DC Plate Current	1.56 Amps
DC Grid—No. 2 Current	0.217 Amp
DC Grid—No. 1 Current (Approx.)	0.300 Amp
Driver Power Output (Approx.)	180 (10) Watts
Power Output (Approx.)	5,500 Watts

RF POWER AMPLIFIER & OSCILLATOR—CLASS C TELEGRAPHY (11) and RF POWER AMPLIFIER—CLASS C FM TELEPHONY

Maximum CCS (1) Ratings, Absolute Values: (7)

DC Plate Voltage	6,600 Max. Volts
DC Grid—No. 2 (Screen) Voltage	2,000 Max. Volts
DC Grid—No. 1 (Control—Grid) Voltage	—1,000 Max. Volts
DC Plate Current	2.75 Max. Amps
DC Grid—No. 1 Current	0.6 Max. Amp
Plate Input	18,000 Max. Watts
Grid—No. 2 Input	400 Max. Watts
Plate Dissipation	10,000 Max. Watts

Typical Operation in Grid-Drive Circuit:

	At 216 Mc		
DC Plate Voltage	5,800	5,800	Volts
DC Grid—No. 2 Voltage (12)	1,200	1,200	Volts
DC Grid—No. 1 Voltage (13)	—130	—175	Volts
Peak RF Grid—No. 1 Voltage	230	370	Volts
DC Plate Current	1.8	2.6	Amps
DC Grid—No. 2 Current	0.1	0.267	Amp
DC Grid—No. 1 Current (Approx.)	0.1	0.222	Amp
Driver Power Output (Approx.) (3)	300 (14)	750 (15)	Watts
Power Output (Approx.)	6,000	9,000	Watts

NOTES

(1) Continuous Commercial Service.

(2) Computed between half-power points and based on tube output capacitance only.

(3) The driver stage is required to supply tube losses and rf circuit losses. The driver stage should be designed to provide an excess of power above the indicated value to take care of variations in line voltage, in components, in initial tube characteristics, and in tube characteristics during life.

(4) This value includes 700 watts of rf circuit loss at 216 Mc.

(5) The driver stage is required to supply tube losses, rf circuit losses, and rf power added to plate circuit. The driver stage should be designed as indicated under (3).

(6) This value includes 300 watts of rf circuit loss at 216 Mc, and 900 watts added to plate circuit.

(7) These ratings hold for operation up to 30 Mc; for ratings at higher frequencies, see Maximum Ratings vs. Frequency Table.

(8) Obtained preferably from a separate source.

(9) Obtained preferably from a combination of 365-ohm grid-No. 1 resistor and —170-volt fixed bias.

(10) This value includes 50 watts of rf circuit loss at 30 Mc.

(11) Key-down conditions per tube without amplitude modulation. Modulation essentially negative may be used if the positive peak of the audio-frequency envelope does not exceed 115% of the carrier conditions.

(12) Obtained preferably from a separate source, or from the plate-supply voltage with a voltage divider, or through a series resistor. A series grid-No. 2 resistor should not be used if the 6166 or a preceding stage is keyed. In this case, the regulation of the source should be sufficient to prevent the grid-No. 2 voltage from rising above 2000 volts under key-up conditions; and additional fixed grid-No. 1 bias must be provided to limit the plate current.

(13) Obtained from fixed supply, by grid-No. 1 resistor, by cathode resistor, or by combination methods.

(14) This value includes 270 watts of rf circuit loss.

(15) This value includes 675 watts of rf circuit loss.

FEDERAL VHF POWER TETRODE
Type F-6166
10 Kilowatts Plate Dissipation

That Federal tubes virtually sell themselves by their performance, is a tribute to the product and the manufacturer.

Average Constant-Current Characteristics of Federal Type F-6166 Power Tetrode

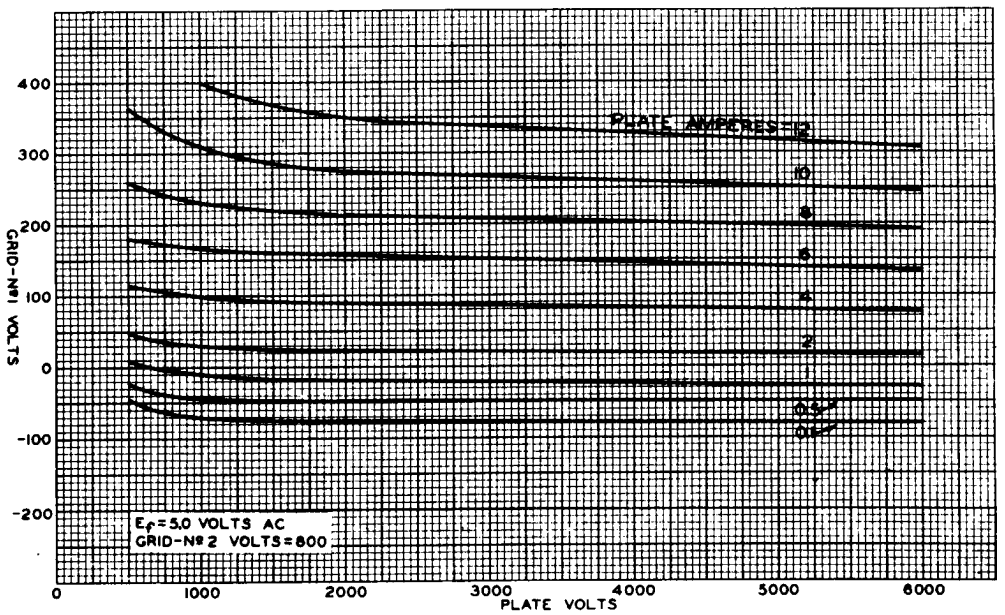

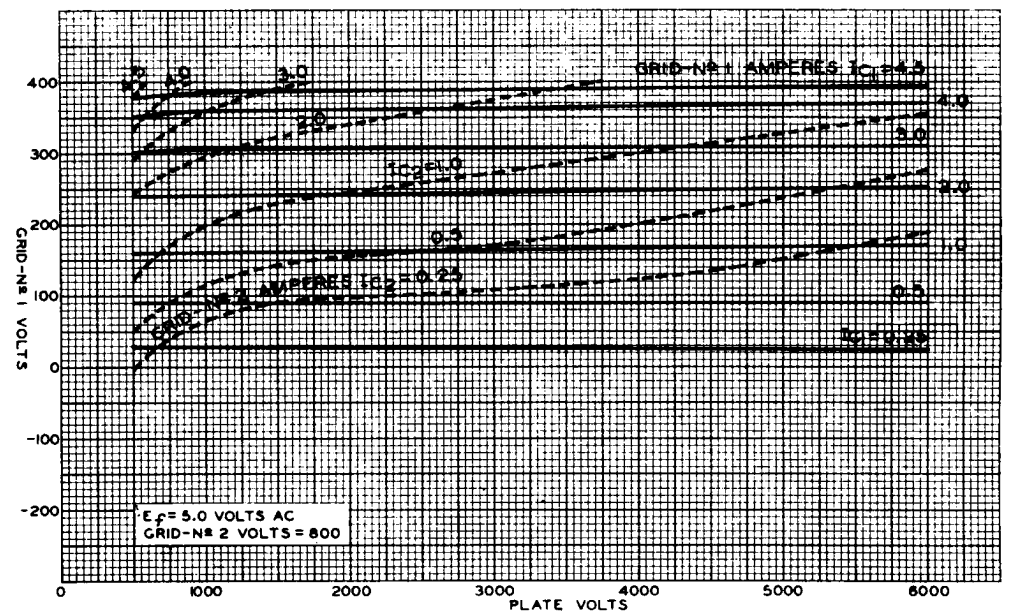

Federal's name on a tube signifies the best in design, engineering, materials, components and craftsmanship.

FEDERAL VHF POWER TETRODE
Type F-6166
10 Kilowatts Plate Dissipation

Average Constant-Current Characteristics of Federal Type F-6166 Power Tetrode

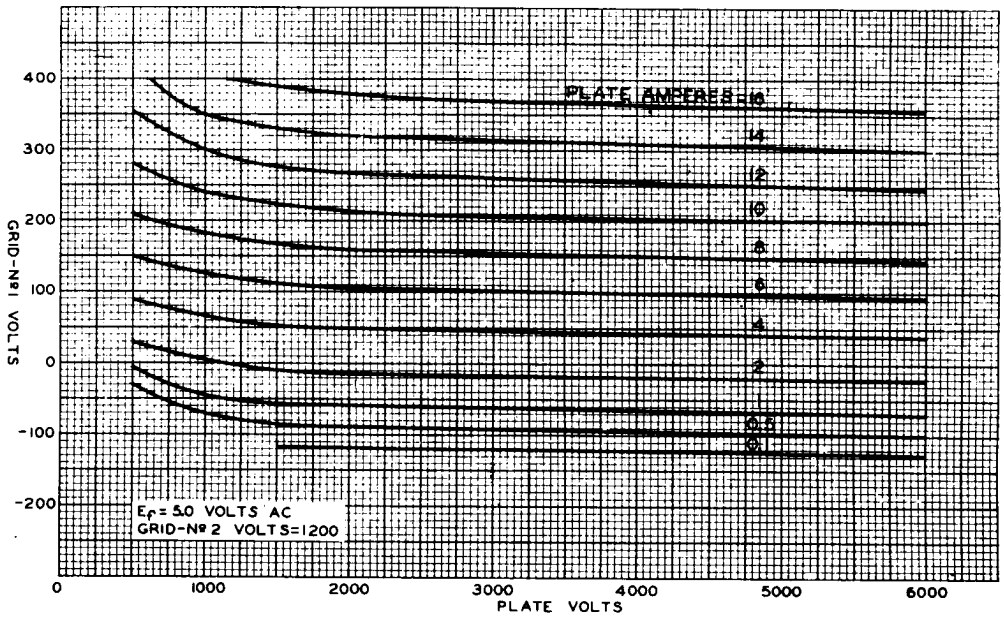

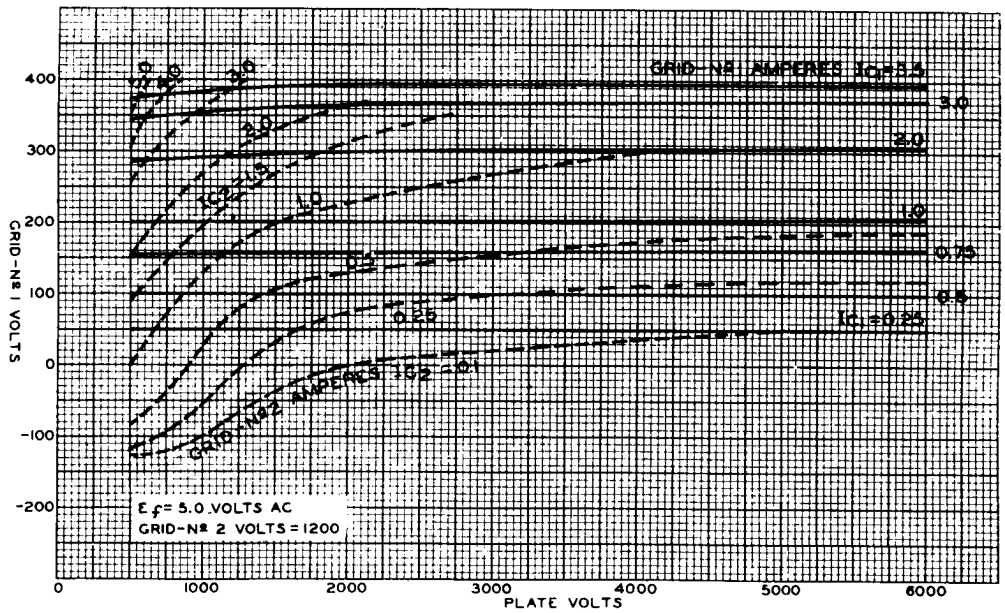

FEDERAL VHF POWER TETRODE
Type F-6166
10 Kilowatts Plate Dissipation

One of the first to manufacture power tubes, Federal experience goes back to the earliest days of the industry.

OUTLINE F-6166

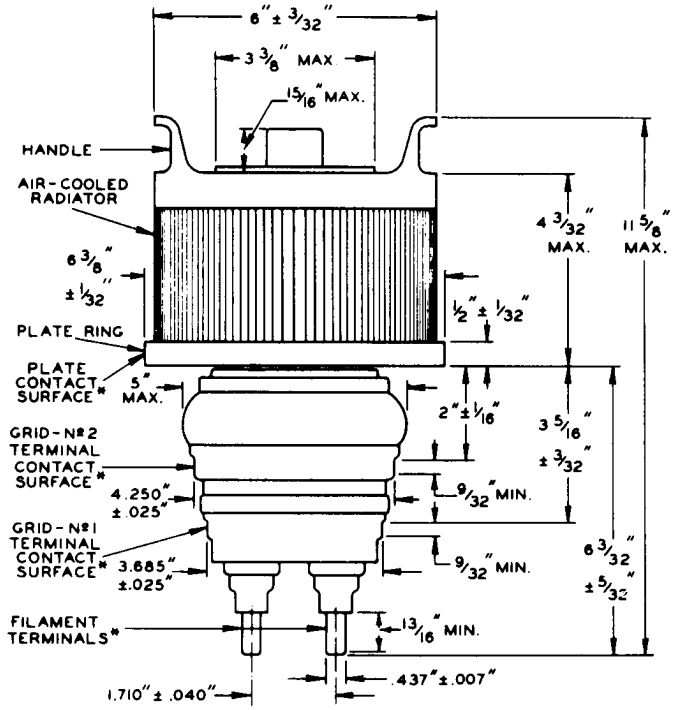

*With the cylindrical surfaces of the Plate Ring, Grid-No. 2 Terminal, Grid-No. 1 Terminal, and Filament Terminals clean, smooth, and free of burrs, the tube will enter a gauge as shown in Sketch G_1. Proper entry of the tube in the gauge is obtained when the Plate Ring is entirely engaged by hole H_1.

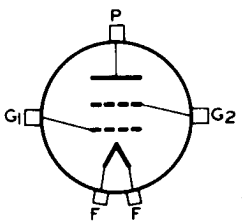

TERMINAL CONNECTIONS

F: FILAMENT POST
G_1: GRID-No. 1 TERMINAL (Adjacent to Filament Posts)
G_2: GRID-No. 2 TERMINAL (Between Grid-No. 1 Terminal and Grid-No. 2 Terminal)
P: PLATE TERMINAL (Ring of Radiator)

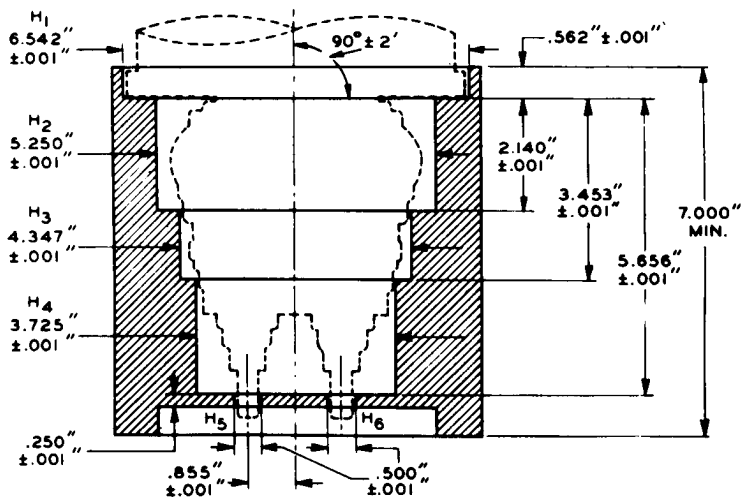

The four cylindrical holes H_1, H_2, H_3, and H_4 have axes coincident within 0.001". The holes H_5 and H_6 have axes parallel to the axes of H_1, H_2, H_3, and H_4 within 0° ± 2".

Form F-694 Printed in U.S.A.

Federal Telephone and Radio Company
A Division of INTERNATIONAL TELEPHONE AND TELEGRAPH CORPORATION
100 Kingsland Road — COMPONENTS DIVISION • VACUUM TUBE DEPARTMENT — Clifton, New Jersey

FEDERAL POWER TRIODE
Type F-6179
50 Kilowatts Plate Dissipation

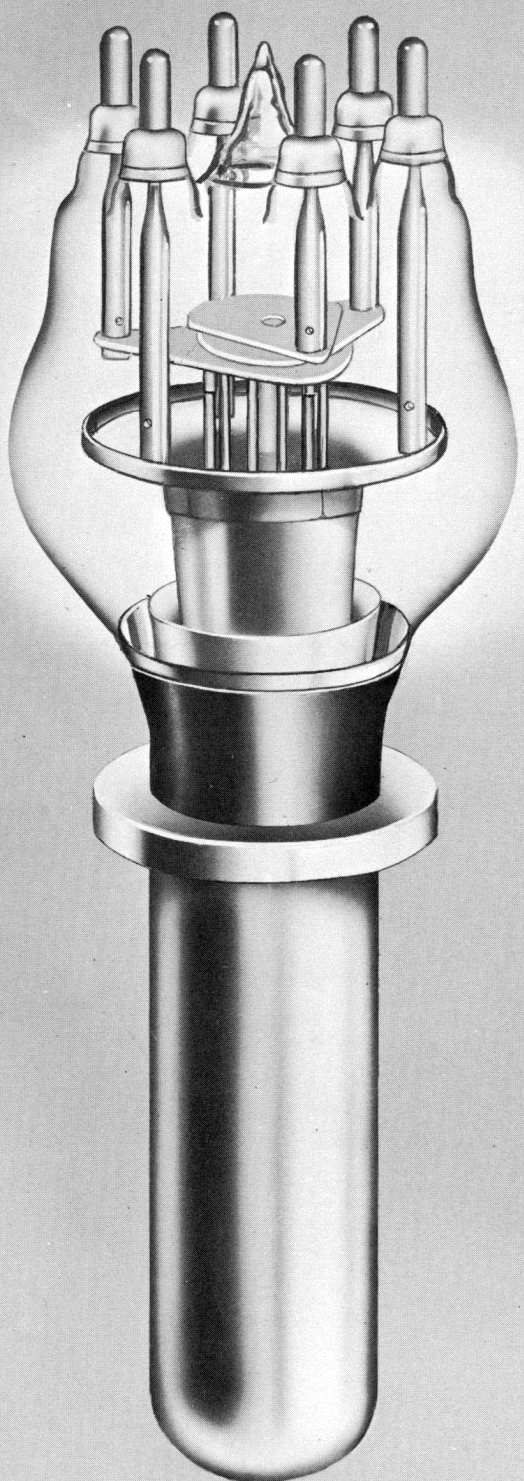

GENERAL DATA

DESCRIPTION:

The F-6179 is a three-electrode tube designed for use as a modulator. The anode is water-cooled and capable of dissipating 50 kilowatts. The cathode is a pure tungsten filament. Maximum ratings apply for audio-frequency use only.

Electrical:

▶ Filament Voltage	27.2 Volts
▶ Filament Current	196.5 Amperes
▶ Filament Starting Current	300 Amperes
▶ Filament Cold Resistance	.015 Ohms
▶ Amplification Factor, at $E_c = -1{,}600$ V $I_b = 3.0$A	4.75
▶ Interelectrode Capacitances	
Grid-Plate	61 $\mu\mu$f
Grid-Filament	63 $\mu\mu$f
Plate-Filament	0.6 $\mu\mu$f

Mechanical:

▶ Mounting Position— Vertical, Anode Down	
▶ Type of Cooling—Water	
Water Flow on Anode	20 GPM
Maximum Outgoing Water Temperature	70° C
Maximum Glass Temperature	150° C
▶ Net Weight, approximate	10 Lbs.

Copyright 1953, Federal Telephone and Radio Company

Federal Telephone and Radio Company

FEDERAL POWER TRIODE
Type F-6179
50 Kilowatts Plate Dissipation

Federal always has made *first-quality* tubes, and the record goes back for more than 40 years.

Maximum Ratings and Typical Operating Conditions

AUDIO-FREQUENCY POWER AMPLIFIER AND MODULATOR—CLASS AB_1

Maximum Ratings, Absolute Values

DC Plate Voltage	15,000 Volts
Maximum Signal DC Plate Current†	10 Amperes
Maximum Signal Plate Input†	120 Kilowatts
Plate Dissipation†	50 Kilowatts

Typical Operation

(Unless otherwise specified, values are for two tubes)

DC Plate Voltage	12,000 Volts
DC Grid Voltage	—2,600 Volts
Peak A-F Grid to Grid Voltage	5,160 Volts
Zero Signal DC Plate Current	1.8 Amperes
Maximum Signal DC Plate Current	5.3 Amperes
Effective Load Resistance Plate to Plate	5,000 Ohms
Maximum Signal Driving Power	0 Watts
Maximum Signal Power Output	40 Kilowatts

For Characteristic Curves refer to Federal Type F-125-A.

†Averaged over any audio-frequency cycle of sine-wave form.

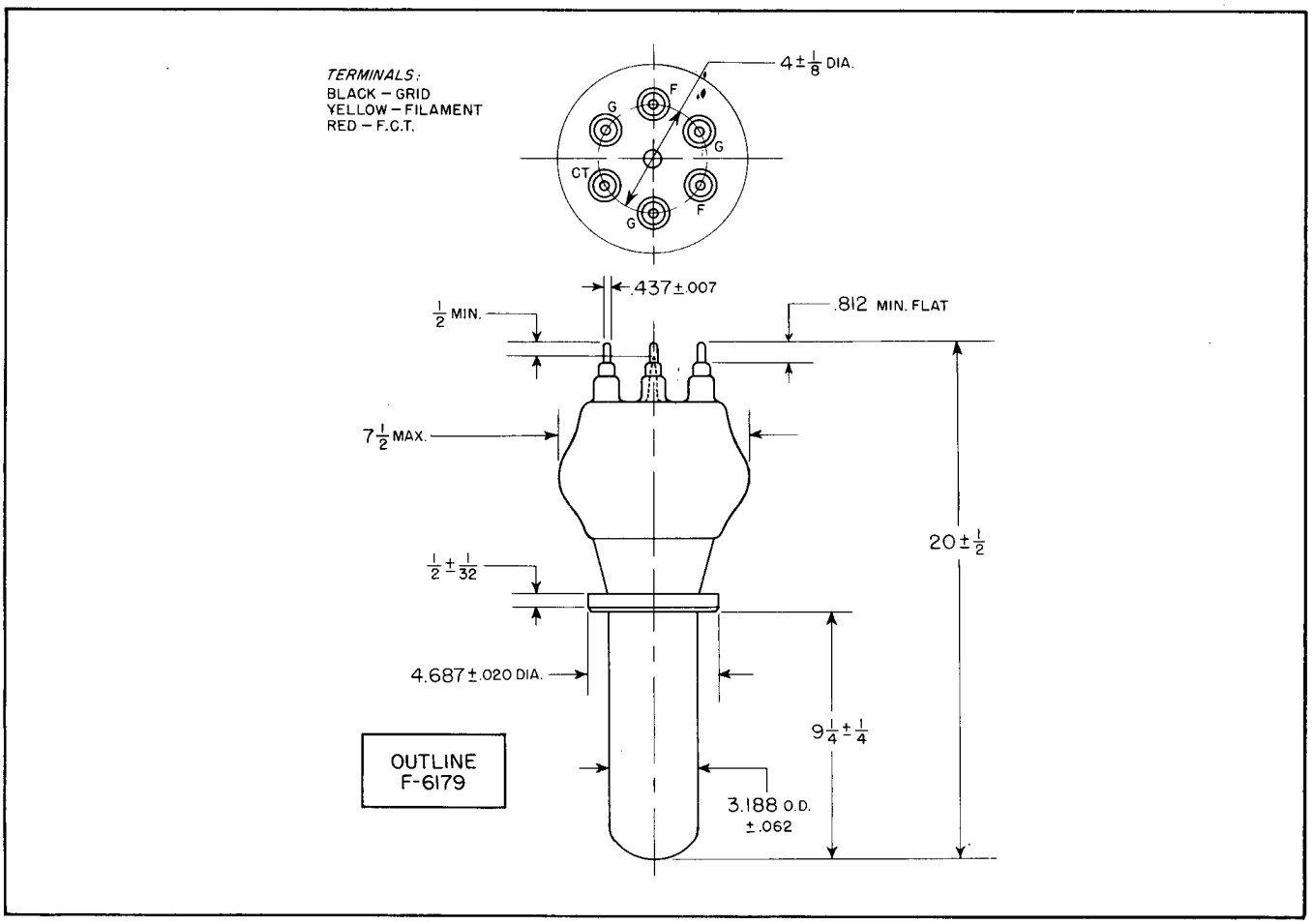

Form F-596 Printed in U. S. A.

DIVISION OF I T & T

Federal Telephone and Radio Company
100 Kingsland Road VACUUM TUBE DEPARTMENT Clifton, New Jersey

FEDERAL POWER TRIODE
Type F-6366
3 Kilowatts Plate Dissipation

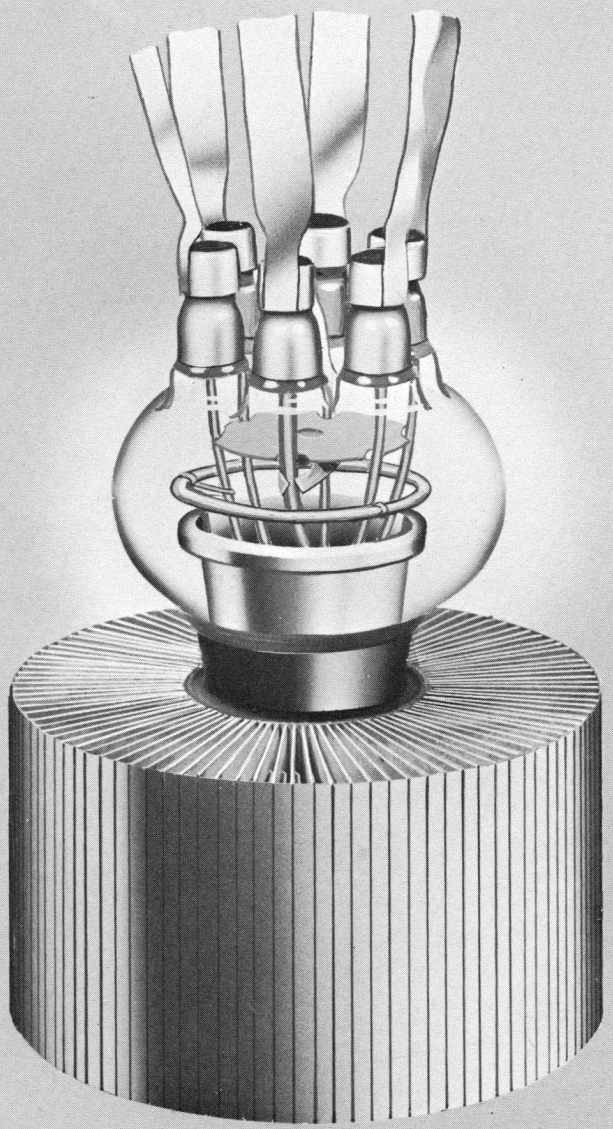

GENERAL DATA

DESCRIPTION:

Federal's Type F-6366 is a three-electrode tube designed for use as an industrial oscillator. The relatively wide spacing between the elements, and the lack of internal insulators make this type tube especially suitable for industrial applications. The anode is air-cooled, capable of dissipating 3 kilowatts. The cathode is a thoriated tungsten filament. Maximum ratings apply up to 30 megacycles. Operation up to 50 megacycles is permissible at reduced ratings.

Electrical:

Filament Voltage	11 Volts
Filament Current	29 Amperes
Amplification Factor, Ec = — 200 V, Ib = 0.2A	25
Interelectrode Capacitances	
Grid-Plate	13 $\mu\mu$f
Grid-Filament	14.5 $\mu\mu$f
Plate-Filament	1.7 $\mu\mu$f

Mechanical:

Mounting Position — Vertical, Anode Down			
Type of Cooling — Forced Air			
Maximum Incoming Air Temperature			45° C
Required Air Flow on Anode			
Plate Dissipation (Kilowatts)	3	2.4	1.8
Air Flow — Cubic Feet Per Min.	190	125	75
Pressure — Inches Water	1.21	0.58	0.26
Maximum Glass Temperature			150° C
Net Weight, Approximate			5¼ Pounds

Copyright 1953, Federal Telephone and Radio Company

FEDERAL POWER TRIODE
Type F-6366
3 Kilowatts Plate Dissipation

Maximum Ratings vs. Operating Frequency

Frequency	30	50 Megacycles
Percentage of Maximum Rated Plate Voltage and Plate Input Class C — Telegraphy	100	75 Per Cent

Maximum Ratings and Typical Operating Conditions

RADIO-FREQUENCY POWER AMPLIFIER AND OSCILLATOR — CLASS C TELEGRAPHY

(Key-down conditions per tube without amplitude modulation)†

Maximum Ratings, Absolute Values

DC Plate Voltage	5,500 Volts
DC Grid Voltage	— 1,500 Volts
DC Plate Current	1.3 Amperes
DC Grid Current	0.15 Amperes
Plate Input	7 Kilowatts
Plate Dissipation	3 Kilowatts

Typical Operation

DC Plate Voltage	4,500	5,000 Volts
DC Grid Voltage	— 500	— 600 Volts
Peak R-F Grid Voltage	1,100	1,300 Volts
DC Plate Current	1.0	1.2 Amperes
DC Grid Current, Approximate	0.12	0.13 Amperes
Driving Power, Approximate	120	160 Watts
Power Output, Approximate	3	4 Kilowatts

†Modulation essentially negative may be used if the positive peak of the envelope does not exceed 115 per cent of the carrier conditions.

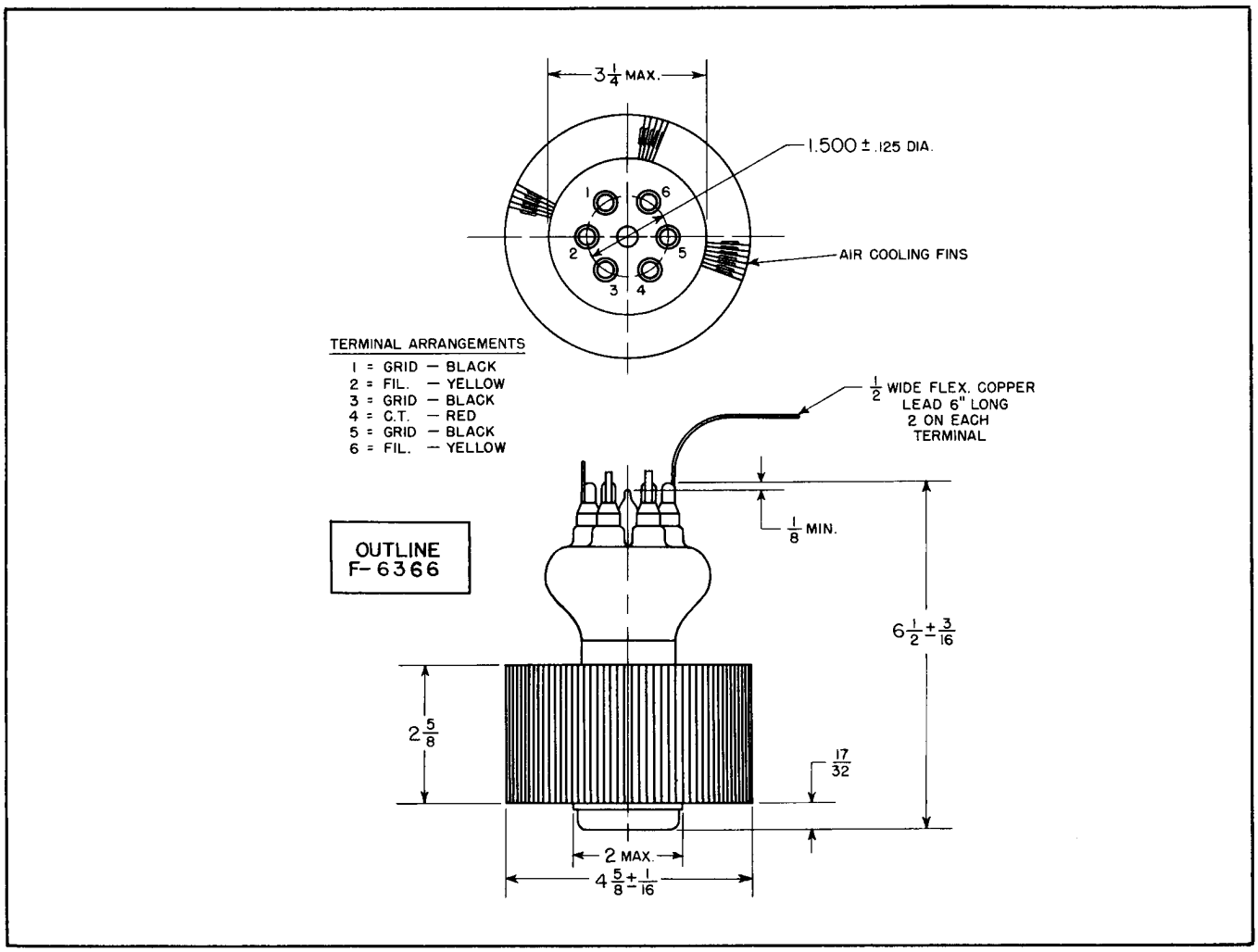

High efficiency radiator allows reduced blower cost in new equipment design.

FEDERAL POWER TRIODE
Type F-6366
3 Kilowatts Plate Dissipation

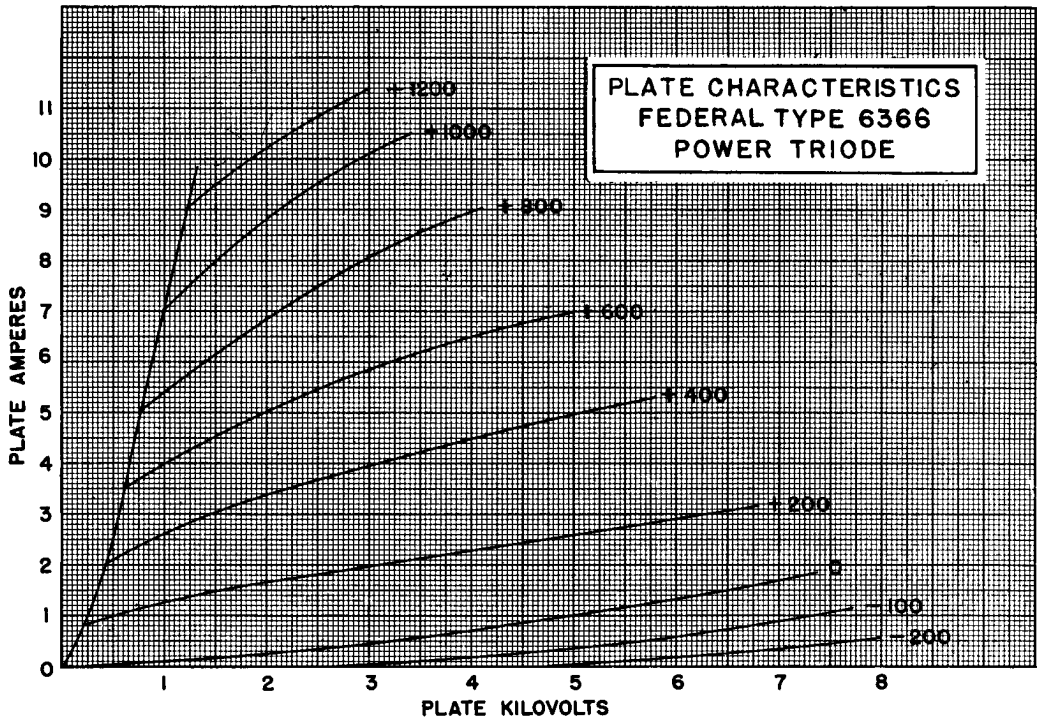

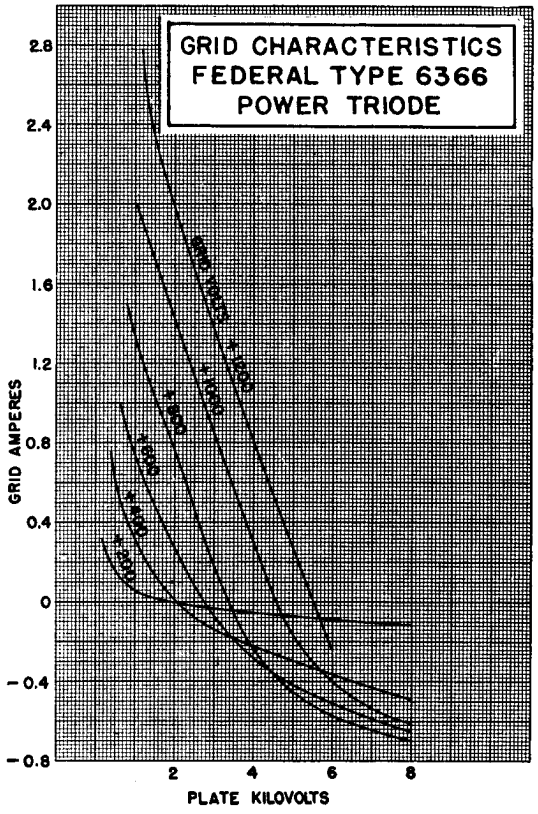

FEDERAL POWER TRIODE
Type F-6366
3 Kilowatts Plate Dissipation

Grid and Filament leads attached for convenience of equipment designers.

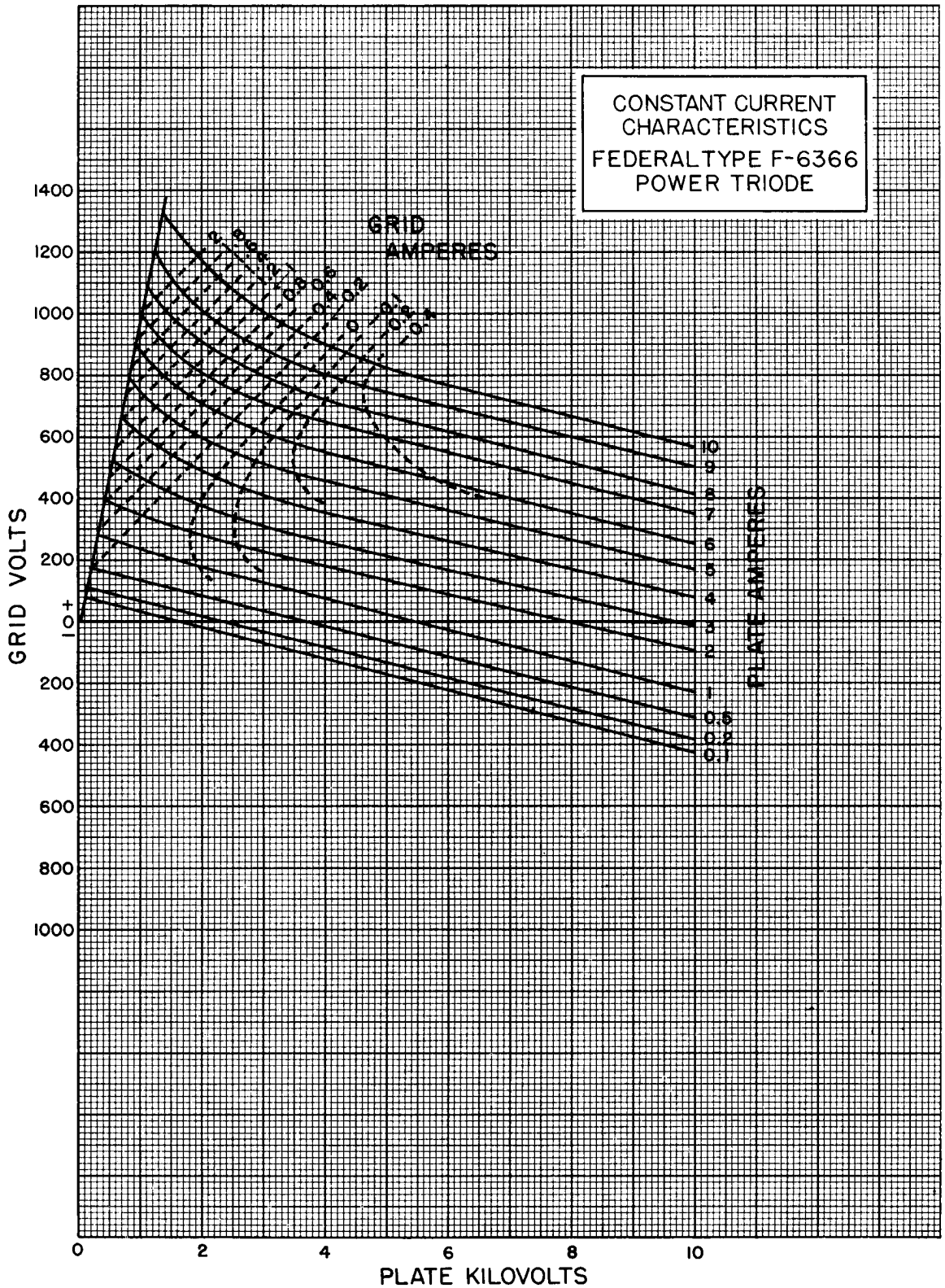

Form F-603 Printed in U. S. A.

DIVISION OF I T & T

Federal Telephone and Radio Company
100 Kingsland Road Clifton, New Jersey

FEDERAL POWER TRIODE
Type F-6367
3 Kilowatts Plate Dissipation

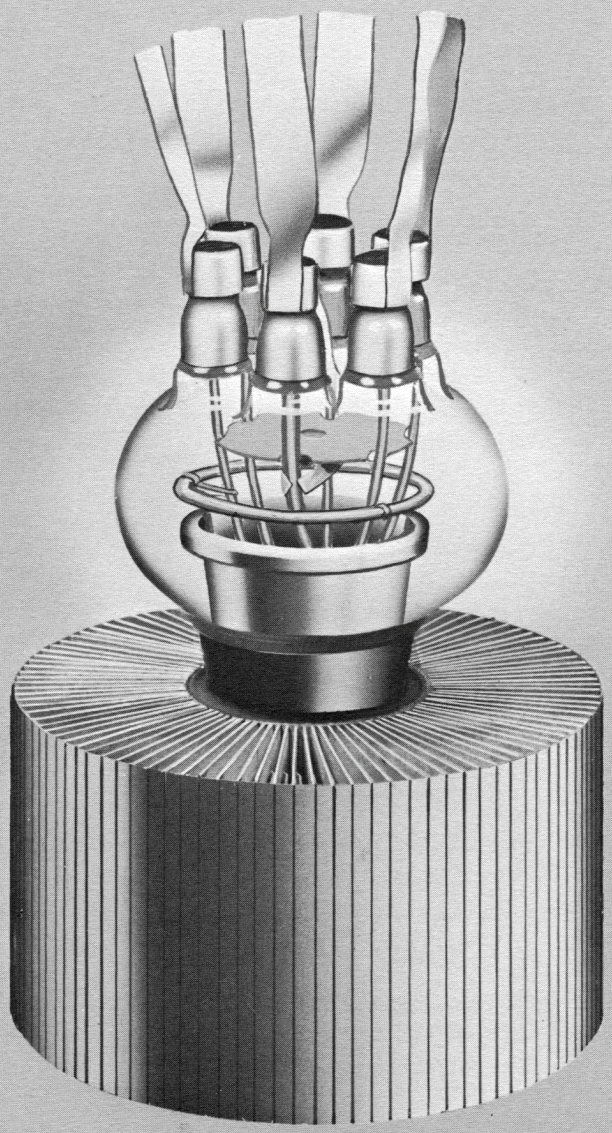

GENERAL DATA

DESCRIPTION:

Federal's Type F-6367 is a three-electrode tube designed for use as a modulator, amplifier and oscillator. The relatively wide spacing between the elements, and the lack of internal insulators make this type tube especially suitable for industrial applications. The anode is air-cooled, capable of dissipating 3 kilowatts. The cathode is a thoriated tungsten filament. Maximum ratings apply up to 30 megacycles. Operation up to 50 megacycles is permissible at reduced ratings.

Electrical:

Filament Voltage	13.0 Volts
Filament Current	36 Amperes
Amplification Factor, Ec = — 200 V, Ib = 0.2A	25
Interelectrode Capacitances	
Grid-Plate	14.7 $\mu\mu$f
Grid-Filament	14.5 $\mu\mu$f
Plate-Filament	1.7 $\mu\mu$f

Mechanical:

Mounting Position — Vertical			
Type of Cooling — Forced Air			
Maximum Incoming Air Temperature			45° C
Required Air Flow on Anode			
Plate Dissipation (Kilowatts)	3	2.4	1.8
Air Flow — Cubic Feet Per Min.	190	125	75
Pressure — Inches Water	1.21	0.58	0.26
Maximum Glass Temperature			150° C
Net Weight, Approximate			5 1/4 Pounds

Copyright 1953, Federal Telephone and Radio Company

FEDERAL POWER TRIODE
Type F-6367
3 Kilowatts Plate Dissipation

Maximum Ratings vs. Operating Frequency

Frequency	30	50 Megacycles
Percentage of Maximum Rated Plate Voltage and Plate Input Class C — Telegraphy	100	75 Per Cent

Maximum Ratings and Typical Operating Conditions

AUDIO-FREQUENCY POWER AMPLIFIER AND MODULATOR — CLASS B

Maximum Ratings, Absolute Values

DC Plate Voltage	6,200 Volts
Maximum Signal DC Plate Current*	2.0 Amperes
Maximum Signal Plate Input*	6.0 Kilowatts
Plate Dissipation*	3 Kilowatts

Typical Operation

(Unless otherwise specified, values are for two tubes)

DC Plate Voltage	5,000 Volts
DC Grid Voltage	— 150 Volts
Peak A-F Grid-to-Grid Voltage	1,260 Volts
Zero Signal DC Plate Current	0.4 Amperes
Maximum Signal DC Plate Current	2.25 Amperes
Effective Load Resistance, Plate to Plate	4,000 Ohms
Maximum Signal Driving Power, Approximate	175 Watts
Maximum Signal Power Output, Approximate	7.2 Kilowatts

*Averaged over any audio-frequency cycle of sine-wave form.

RADIO-FREQUENCY POWER AMPLIFIER — CLASS B

(Carrier conditions per tube for use with a maximum modulation factor of 1.0)

Maximum Ratings, Absolute Values

DC Plate Voltage	6,200 Volts
DC Plate Current	1.5 Amperes
Plate Input	4.5 Kilowatts
Plate Dissipation	3 Kilowatts

Typical Operation

DC Plate Voltage	6,000 Volts
DC Grid Voltage	— 160 Volts
Peak R-F Grid Voltage	300 Volts
DC Plate Current	0.56 Amperes
DC Grid Current, Approximate	0.0 Amperes
Driving Power, Approximate**	47 Watts
Power Output, Approximate	1 Kilowatt

**At crest of audio-frequency cycle with modulation factor of 1.0

PLATE-MODULATED RADIO-FREQUENCY POWER AMPLIFIER — CLASS C TELEPHONY

(Carrier conditions per tube for use with a maximum modulation factor of 1.0)

Maximum Ratings, Absolute Values

DC Plate Voltage	5,000 Volts
DC Grid Voltage	— 1,500 Volts
DC Plate Current	1.5 Amperes
DC Grid Current	0.2 Amperes
Plate Input	7.5 Kilowatts
Plate Dissipation	2 Kilowatts

Typical Operation

DC Plate Voltage	5,000 Volts
DC Grid Voltage	— 800 Volts
Peak R-F Grid Voltage	1,370 Volts
DC Plate Current	0.74 Amperes
DC Grid Current, Approximate	0.10 Amperes
Driving Power, Approximate	130 Watts
Power Output, Approximate	2.7 Kilowatts

RADIO-FREQUENCY POWER AMPLIFIER AND OSCILLATOR — CLASS C TELEGRAPHY

(Key-down conditions per tube without amplitude modulation)†

Maximum Ratings, Absolute Values

DC Plate Voltage	6,200 Volts
DC Grid Voltage	— 1,500 Volts
DC Plate Current	2.0 Amperes
DC Grid Current	0.2 Amperes
Plate Input	12 Kilowatts
Plate Dissipation	3 Kilowatts

Typical Operation

DC Plate Voltage	6,000 Volts
DC Grid Voltage	— 800 Volts
Peak R-F Grid Voltage	1,510 Volts
DC Plate Current	1.4 Amperes
DC Grid Current, Approximate	0.16 Amperes
Driving Power, Approximate	225 Watts
Power Output, Approximate	6 Kilowatts

†Modulation essentially negative may be used if the positive peak of the envelope does not exceed 115 per cent of the carrier conditions.

DIVISION OF I T&T

High efficiency radiator allows reduced blower cost in new equipment design.

FEDERAL POWER TRIODE
Type F-6367
3 Kilowatts Plate Dissipation

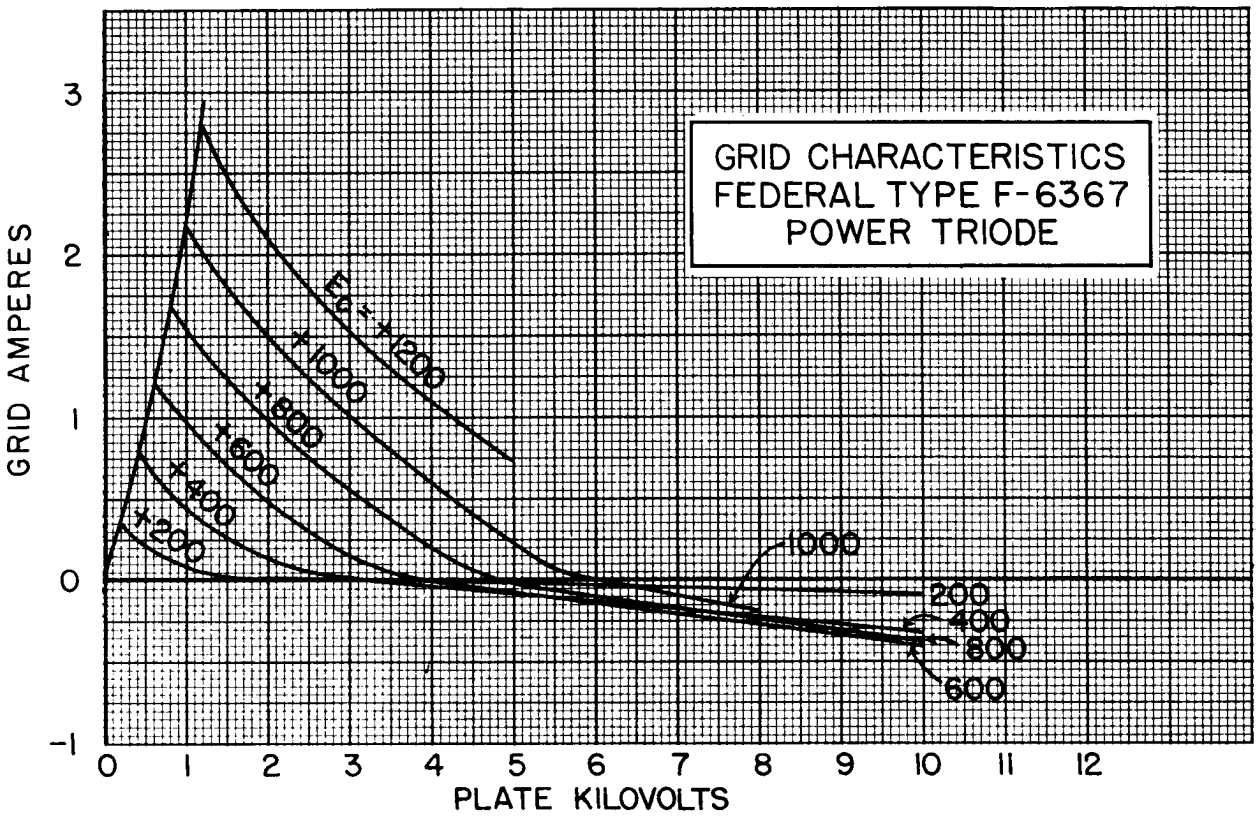

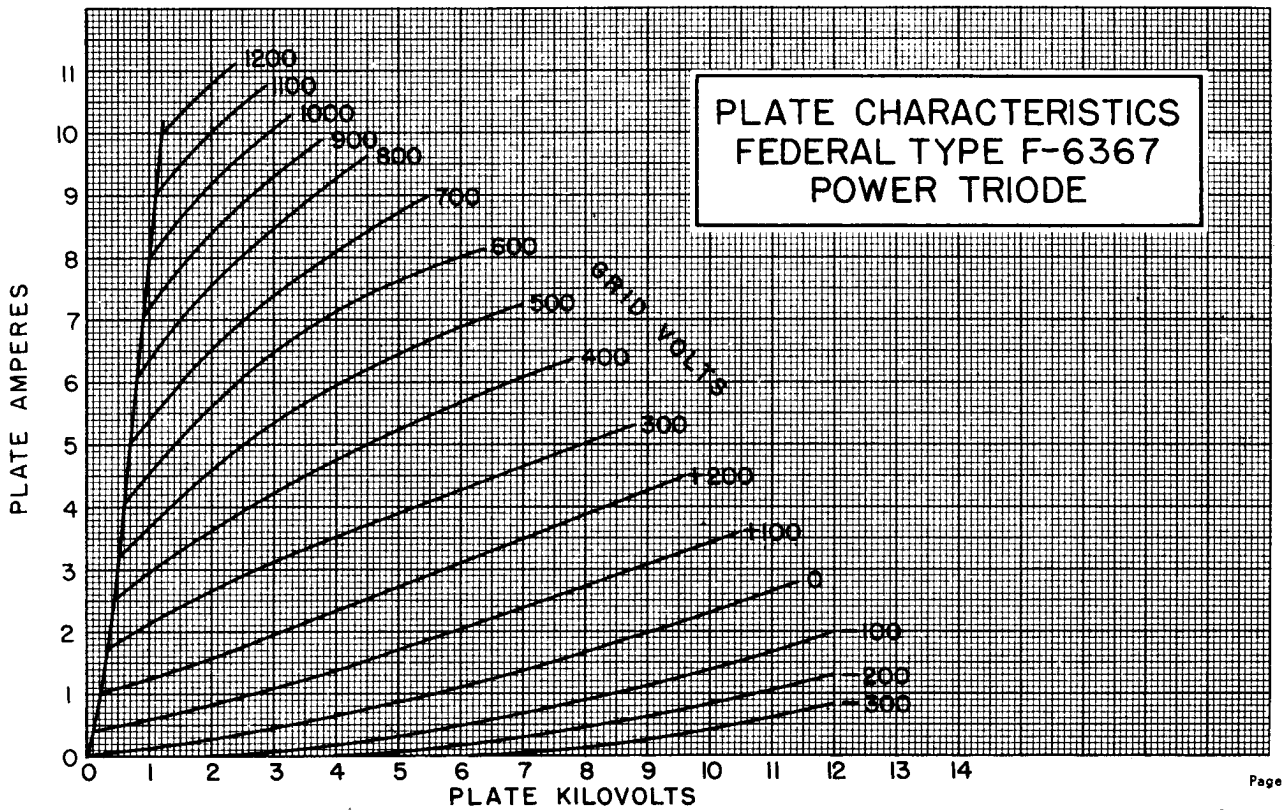

FEDERAL POWER TRIODE
Type F-6367
3 Kilowatts Plate Dissipation

Grid and Filament leads attached for convenience of equipment designers.

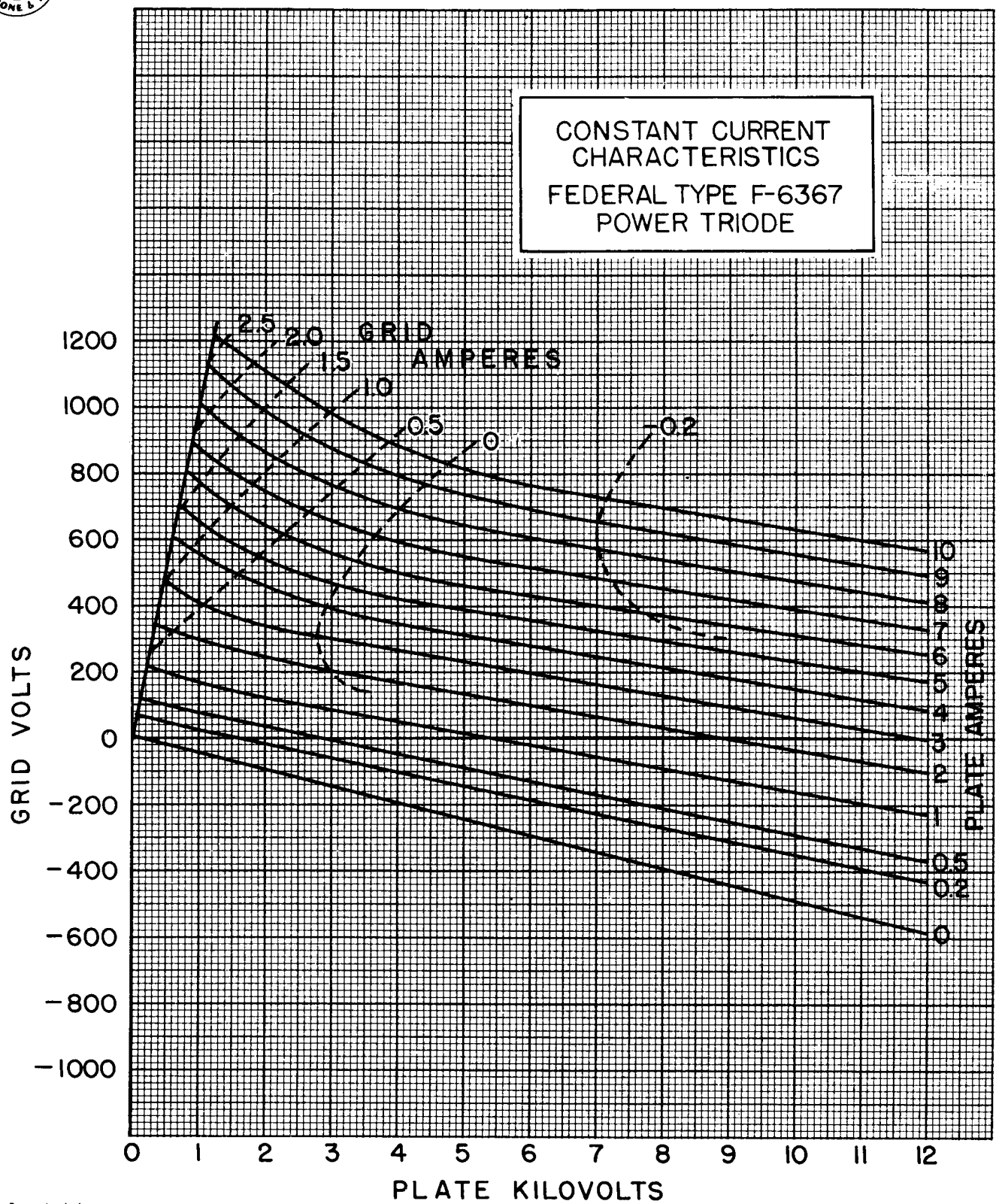

Kovar grid and filament seals and Helical type filament contribute to rugged tube design.

FEDERAL POWER TRIODE
Type F-6367
3 Kilowatts Plate Dissipation

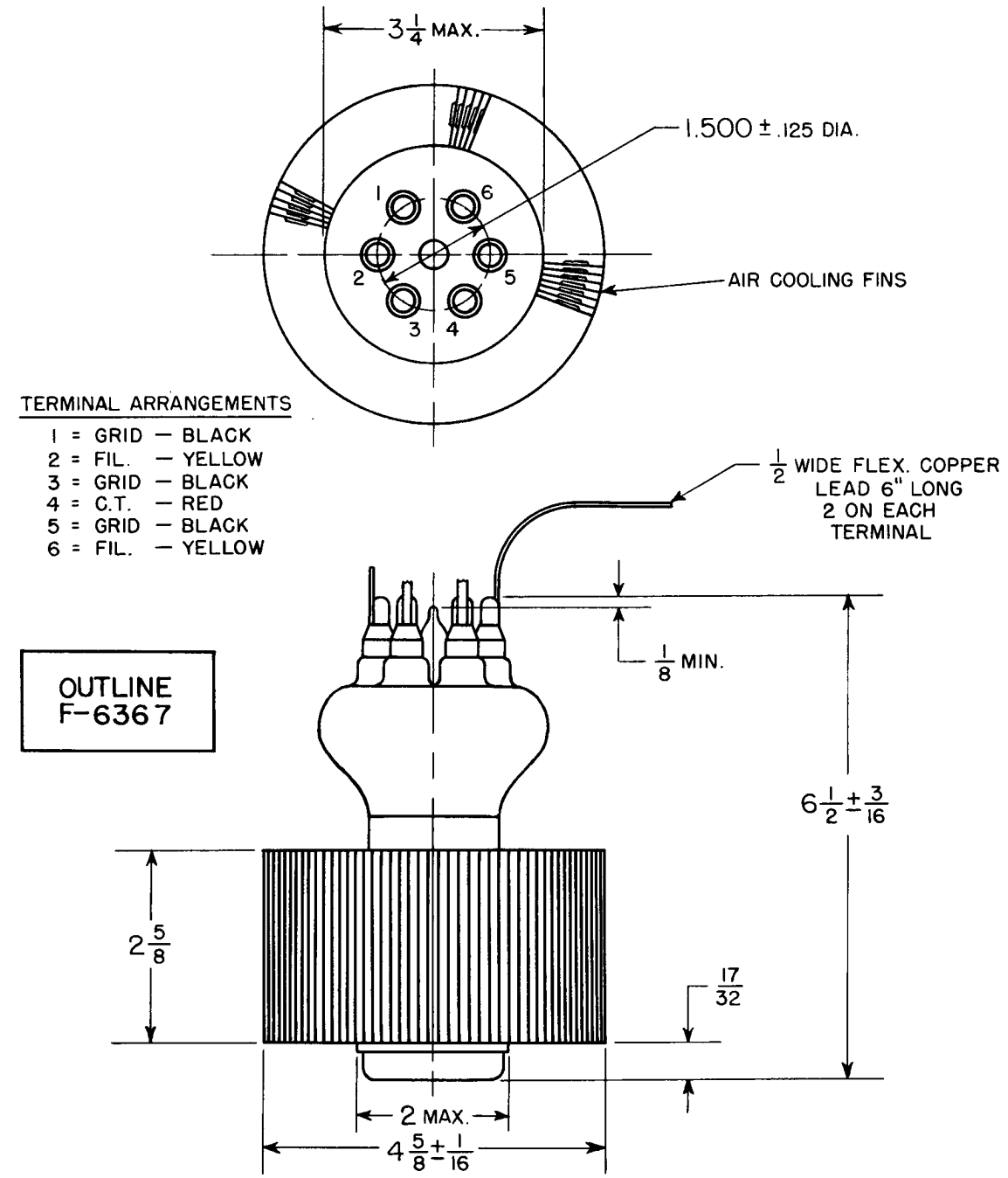

Federal Telephone and Radio Company
100 Kingsland Road Clifton, New Jersey

Federal Always Has
Made Better Tubes

Form F-604 Printed in U. S. A.

engineering TUBE DATA

F-6398
POWER TRIODE

ITT Components Division

Tentative Specification

DESCRIPTION

The F-6398 is a three-electrode tube designed and manufactured by the Vacuum Tube Department of the I T & T Components Division for use as a radio frequency amplifier, oscillator, or Class B modulator. The anode is water cooled, capable of dissipating 225 kilowatts. The cathode is a thoriated tungsten filament. Maximum ratings apply up to 22 megacycles.

ELECTRICAL

Filament Voltage	15.5 volts
Filament Current	420 amperes
Filament Starting Current	1000 max. amperes
Amplification Factor	
E_c = -200 volts; I_b = 5 amperes	21
Inter-electrode Capacitances	
Grid-Plate	125 μμf
Grid-Filament	140 μμf
Plate-Filament	4 μμf

MECHANICAL

Mounting Position	Vertical, anode down
Type of Cooling	Water and Forced Air
Maximum Outgoing Water Temperature	70 °C
Water Flow	40 gpm
Specified water flow must start upon application of any voltages and may be removed simultaneously with filament and plate power.	
Air Flow	
To air manifold	300 cfm min.
To filament seals	40 cfm min.
Cooling air to start with the application of any voltages and may be removed simultaneously with filament and plate power.	
Maximum Glass Temperature	180 °C
Net Weight	65 pounds, approx.

ITT COMPONENTS DIVISION
INTERNATIONAL TELEPHONE AND TELEGRAPH CORPORATION
P. O. BOX 412, CLIFTON, NEW JERSEY

PLATE-MODULATED RADIO-FREQUENCY POWER AMPLIFIER - CLASS C TELEPHONY
(Carrier conditions per tube for use with a maximum modulation factor of 1.0)

MAXIMUM RATINGS, ABSOLUTE VALUES

D-C Plate Voltage	20 kilovolts
D-C Grid Voltage	-4 kilovolts
D-C Plate Current	16.5 amperes
D-C Grid Current	5 amperes
Plate Input	320 kilowatts
Plate Dissipation	150 kilowatts

TYPICAL OPERATION

D-C Plate Voltage	17 kilovolts
D-C Grid Voltage	-2.5 kilovolts
Peak R-F Grid Voltage	3.55 kilovolts
Peak R-F Plate Voltage	14 kilovolts
D-C Plate Current	16 amperes
D-C Grid Current, approx.	2.2 amperes
Driving Power, approx.	7.9 kilowatts
Power Output, approx.	200 kilowatts

AUDIO-FREQUENCY POWER AMPLIFIER AND MODULATOR - CLASS B

MAXIMUM RATINGS, ABSOLUTE VALUES

D-C Plate Voltage	25 kilovolts
Maximum Signal D-C Plate Current*	20 amperes
Maximum Signal Plate Input*	500 kilowatts
Plate Dissipation*	225 kilowatts

TYPICAL OPERATION
(Unless otherwise specified, values are for two tubes)

D-C Plate Voltage	14	18 kilovolts
D-C Grid Voltage	-675	-830 volts
Peak A-F Grid-to-Grid Voltage	2760	3320 volts
Zero Signal D-C Plate Current	4	4 amperes
Maximum Signal D-C Plate Current	32	38 amperes
Effective Load Resistance Plate-to-Plate	960	1065 ohms
Maximum Signal Driving Power, approx.	2440	4500 watts
Maximum Signal Power Output, approx.	300	480 kilowatts

*Averaged over any audio frequency cycle of sine-wave form.

RADIO FREQUENCY POWER AMPLIFIER AND OSCILLATOR - CLASS C TELEGRAPHY
(Key down conditions without AM)

MAXIMUM RATINGS, ABSOLUTE VALUES

D-C Plate Voltage	25 kilovolts
D-C Grid Voltage	-4 kilovolts
D-C Plate Current	25 amperes
D-C Grid Current	5 amperes
Plate Input	500 kilowatts
Plate Dissipation	225 kilowatts

TYPICAL OPERATION

D-C Plate Voltage	18 kilovolts
D-C Grid Voltage	-2.3 kilovolts
Peak R-F Grid Voltage	3.6 kilovolts
D-C Plate Current	24 amperes
D-C Grid Current, approx.	3.6 amperes
Driving Power, approx.	11 kilowatts
Power Out, approx.	325 kilowatts

RADIO FREQUENCY POWER AMPLIFIER AND OSCILLATOR - PULSED OPERATION

MAXIMUM RATINGS, ABSOLUTE VALUES

D-C Plate Voltage	30 kilovolts
D-C Grid Voltage	-8 kilovolts
Peak Cathode Current	400 amperes
Plate Dissipation	225 kilowatts
Pulse Length	.010 seconds
Duty Cycle	.03

TYPICAL OPERATION

D-C Plate Voltage	25 kilovolts
D-C Grid Voltage	-5 kilovolts
D-C Plate Current (during Pulse)	75 amperes
D-C Grid Current (during Pulse)	10 amperes
Peak Power Output	1300 kilowatts

ITT COMPONENTS DIVISION
INTERNATIONAL TELEPHONE AND TELEGRAPH CORPORATION
P. O. BOX 412, CLIFTON, NEW JERSEY

MODULATOR TUBE - PULSED OPERATION
(Switch Tube Applications)

MAXIMUM RATINGS, ABSOLUTE VALUES

D-C Plate Voltage	65	65 max. kilovolts
Peak Positive Voltage (Instantaneous)	70	70 max. kilovolts
D-C Grid Voltage	-8	-8 max. kilovolts
Peak Positive Grid Voltage	8	8 max. kilovolts
Pulse Plate Current	350	**450 max. amperes
Pulse Grid Current	150	**250 max. amperes
Pulse Cathode Current	400	**550 max. amperes
Grid Dissipation	6	6 max. kilowatts
Duty Factor	.002	.002 max.
Pulse Length	15	15 max. μsec.

TYPICAL OPERATION

D-C Plate Voltage	50 kilovolts
Pulse Plate Current	300 amperes
D-C Grid Voltage	-4 kilovolts
Pulse Grid Current	90 amperes
Pulse Positive Grid Voltage	3 kilovolts
Duty Factor	.001
Pulse Length	10 μsec.
Plate Output Voltage	44 kilovolts

**These ratings apply only under elevated filament temperatures - E_f = 16.75 v.

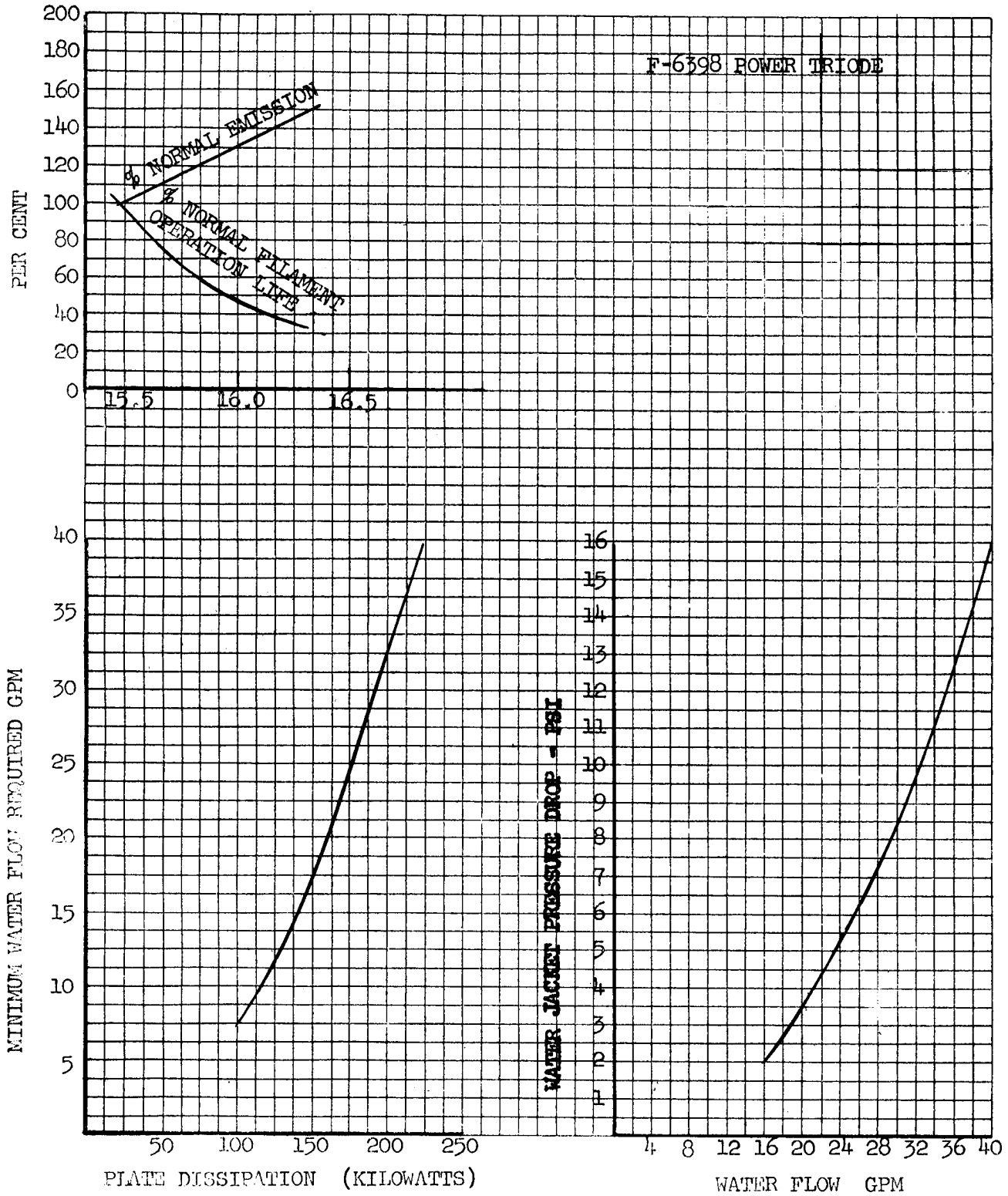

ITT COMPONENTS DIVISION
INTERNATIONAL TELEPHONE AND TELEGRAPH CORPORATION
P. O. BOX 412, CLIFTON, NEW JERSEY

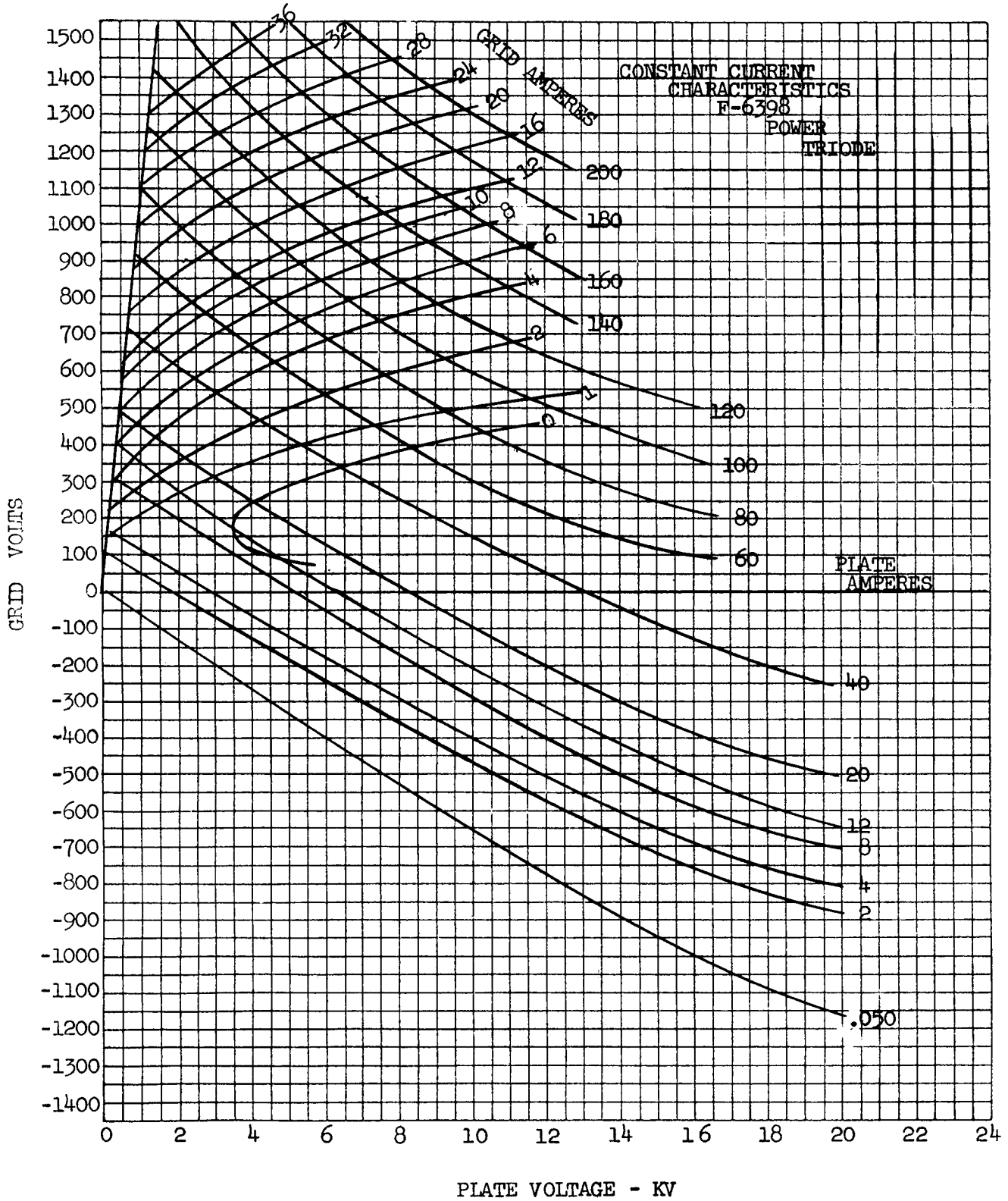
CONSTANT CURRENT
CHARACTERISTICS
F-6398
POWER
TRIODE
GRID AMPERES
36
32
28
24
20
16
12
10
8
6
4
2
1
0
PLATE
AMPERES
200
180
160
140
120
100
80
60
40
20
12
8
4
2
.050
GRID VOLTS
1500
1400
1300
1200
1100
1000
900
800
700
600
500
400
300
200
100
0
-100
-200
-300
-400
-500
-600
-700
-800
-900
-1000
-1100
-1200
-1300
-1400
0
2
4
6
8
10
12
14
16
18
20
22
24
PLATE VOLTAGE - KV

FIL. #1 -- Yellow
FIL. #2 -- Red

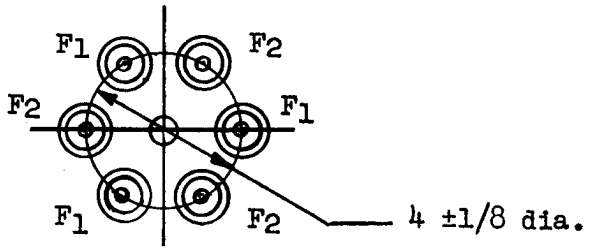

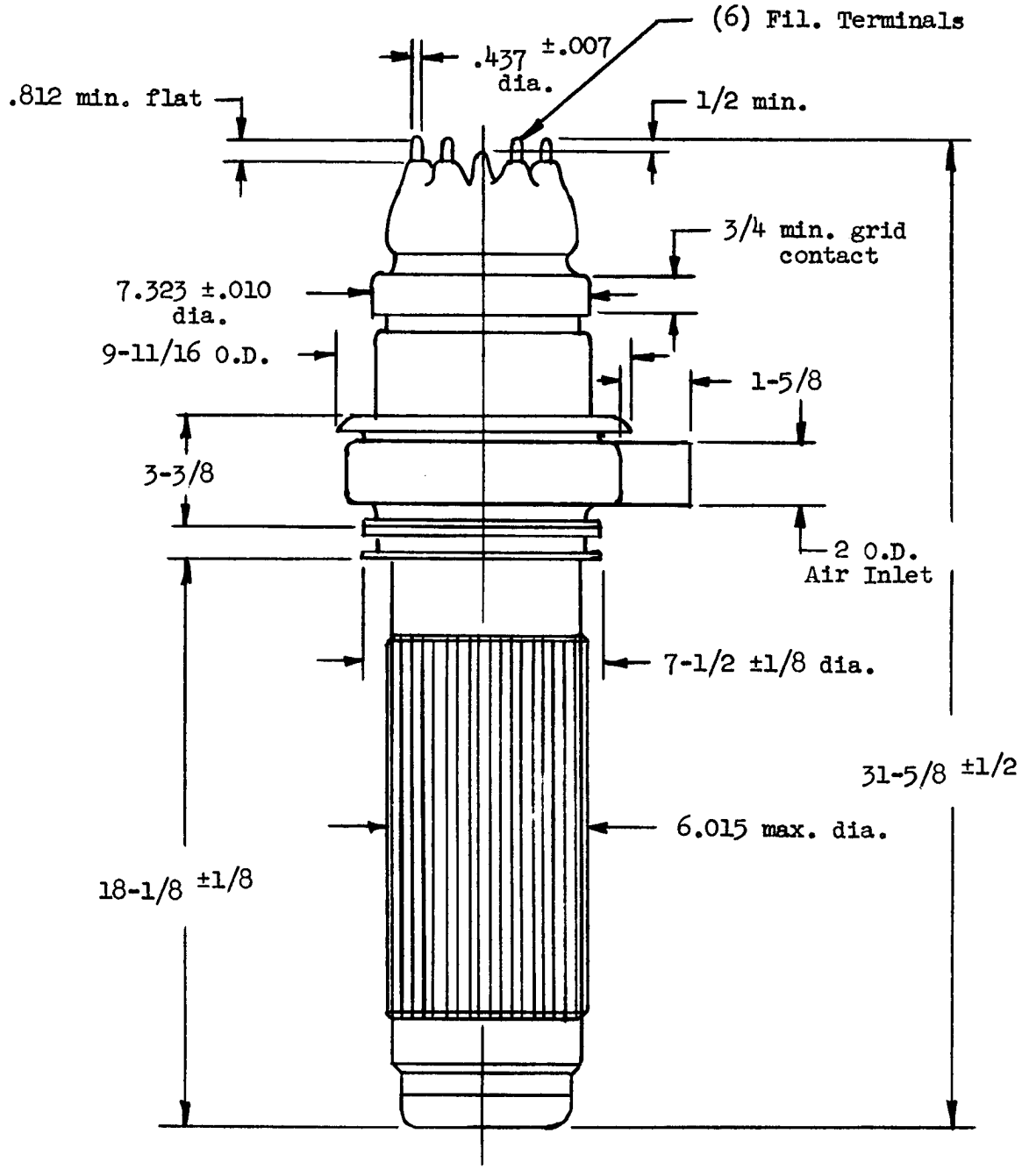

OUTLINE

F-6398 POWER TRIODE

405

ITT COMPONENTS DIVISION
INTERNATIONAL TELEPHONE AND TELEGRAPH CORPORATION
P. O. BOX 412, CLIFTON, NEW JERSEY

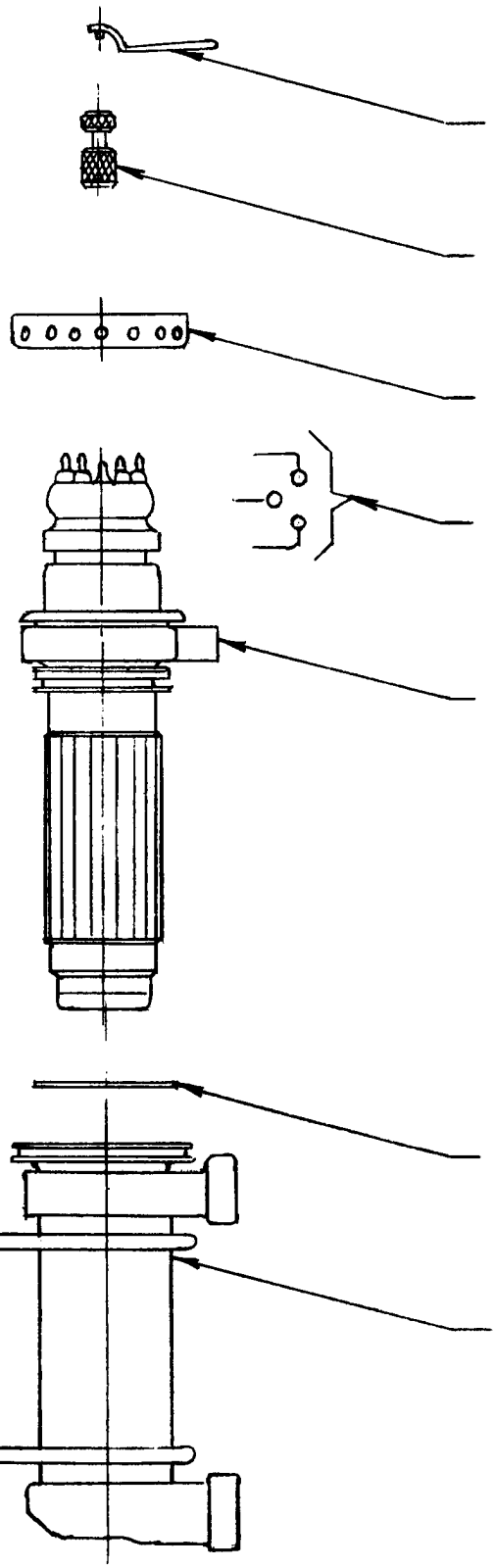

SPANNER WRENCH
RT-52843-1 2 REQ'D
Not to scale

TERMINAL CONNECTOR ASSEM.
RT-52578-1 6 REQ'D
Not to scale

GRID RING CONN. ASSEM.
RT-54260-1

BALL GAP ASSEM.
RT-54040-1

TUBE F-6398

GASKET-WATER JACKET
RT-6768-1

WATER JACKET
RT-53894-2

ACCESSORIES

ITT COMPONENTS DIVISION
INTERNATIONAL TELEPHONE AND TELEGRAPH CORPORATION
P. O. BOX 412, CLIFTON, NEW JERSEY

FEDERAL POWER TRIODE
Type F-6399
6 Kilowatts Plate Dissipation

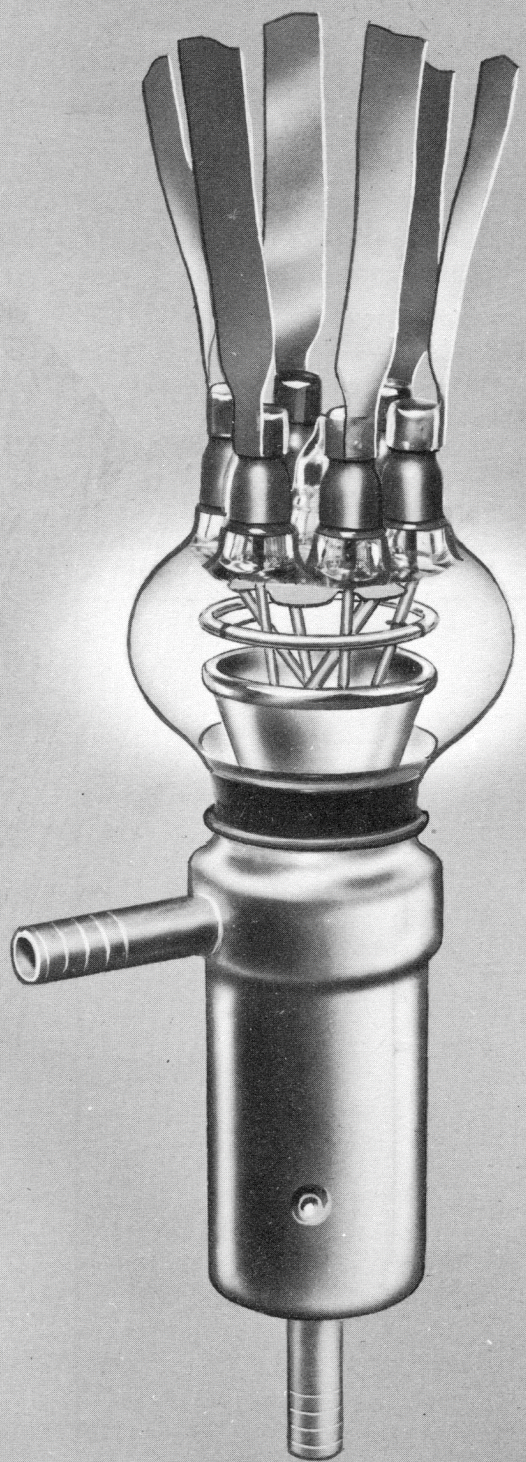

GENERAL DATA

DESCRIPTION:

Federal's Type F-6399 is a three-electrode tube designed for use as an industrial oscillator. The relatively wide spacing between the elements, and the lack of internal insulators make this type tube especially suitable for industrial applications. The anode is water-cooled with an integral water jacket, capable of dissipating 6 kilowatts. The cathode is a thoriated tungsten filament. Maximum ratings apply up to 30 megacycles. Operation up to 50 megacycles is permissible at reduced ratings.

Electrical:

Filament Voltage*	11 Volts
Filament Current	29 Amperes
Amplification Factor, E_c = −200 V, I_b = 0.2A	25
Interelectrode Capacitances	
Grid-Plate	11.5 $\mu\mu$f
Grid-Filament	13.8 $\mu\mu$f
Plate-Filament	1.7 $\mu\mu$f

*Full rated voltage may be safely applied to the cold filament.

Mechanical:

Mounting Position— Vertical, Anode Down	
Type of Cooling—Water	
Water Flow	3.5 GPM
Max. Outgoing water Temperature	70° C
Maximum Glass Temperature	150° C
Net Weight, Approximate	1¼ Pounds

Copyright 1953, Federal Telephone and Radio Company

FEDERAL POWER TRIODE
Type F-6399
6 Kilowatts Plate Dissipation

Maximum Ratings vs. Operating Frequency

Frequency	30	50 Megacycles
Percentage of Maximum Rated Plate Voltage and Plate Input Class C — Telegraphy	100	75 Per Cent

Maximum Ratings and Typical Operating Conditions

RADIO-FREQUENCY POWER AMPLIFIER AND OSCILLATOR—CLASS C TELEGRAPHY

(Key-down conditions per tube without amplitude modulation)†

Maximum Ratings, Absolute Values

DC Plate Voltage	6,200 Volts
DC Grid Voltage	—1,500 Volts
DC Plate Current	1.5 Amps.
DC Grid Current	0.16 Amps.
Plate Input	9 KW
Plate Dissipation	6 KW

Typical Operation

DC Plate Voltage	4,500	5,000	6,000 Volts
DC Grid Voltage	—500	—600	—800 Volts
Peak R-F Grid Voltage	1,100	1,300	1,500 Volts
DC Plate Current	1.0	1.2	1.4 Amps.
DC Grid Current, Approximate	0.12	0.13	0.15 Amps.
Driving Power, Approximate	120	160	210 Watts
Power Output, Approximate	3	4	6 KW

†Modulation essentially negative may be used if the positive peak of the envelope does not exceed 115 per cent of the carrier conditions.

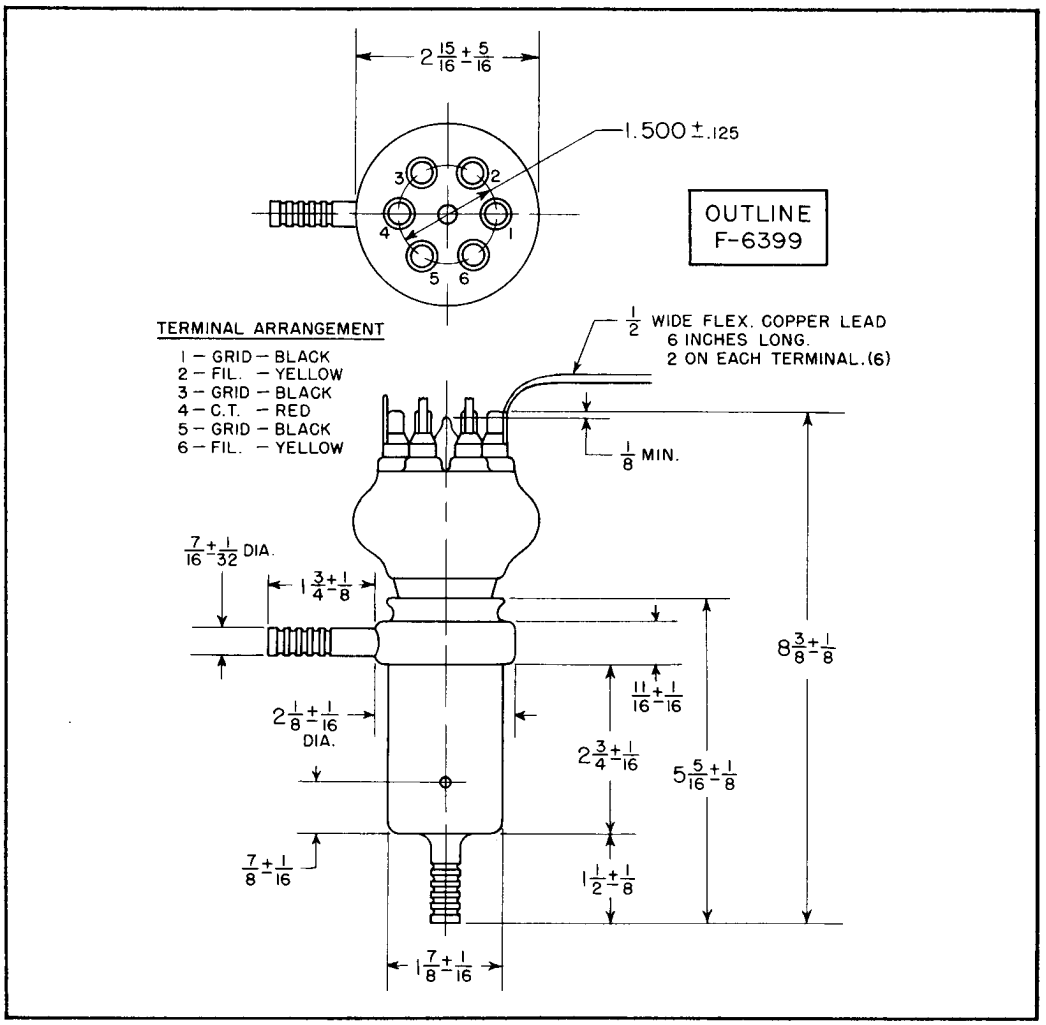

Integral water jacket incorporated in the tube design.

FEDERAL POWER TRIODE
Type F-6399
6 Kilowatts Plate Dissipation

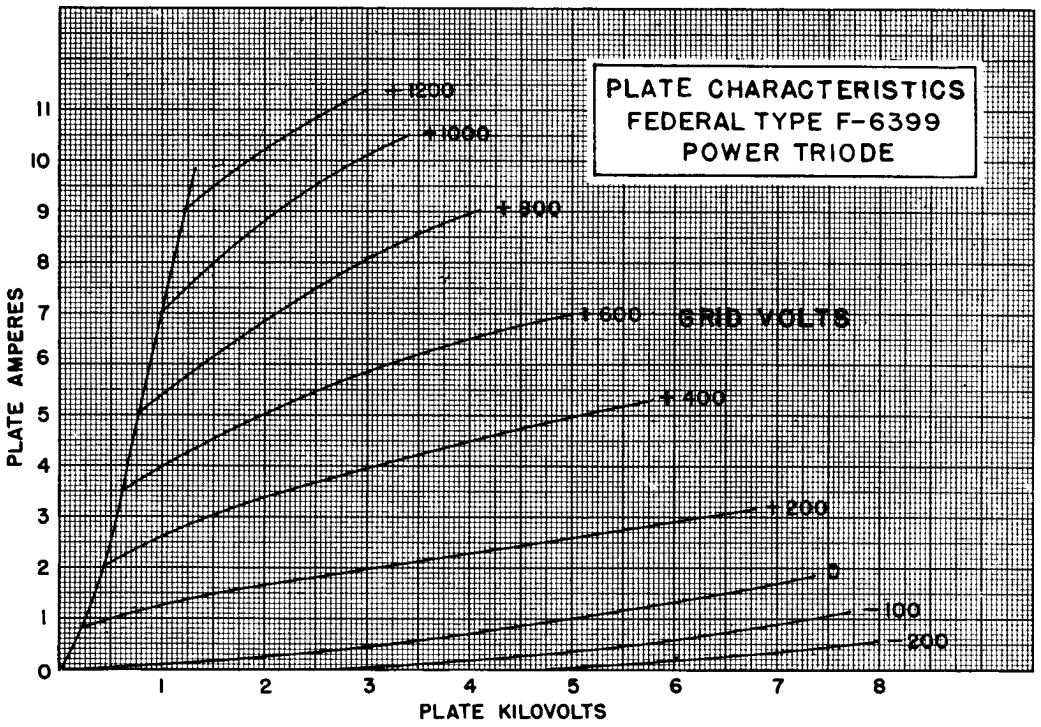

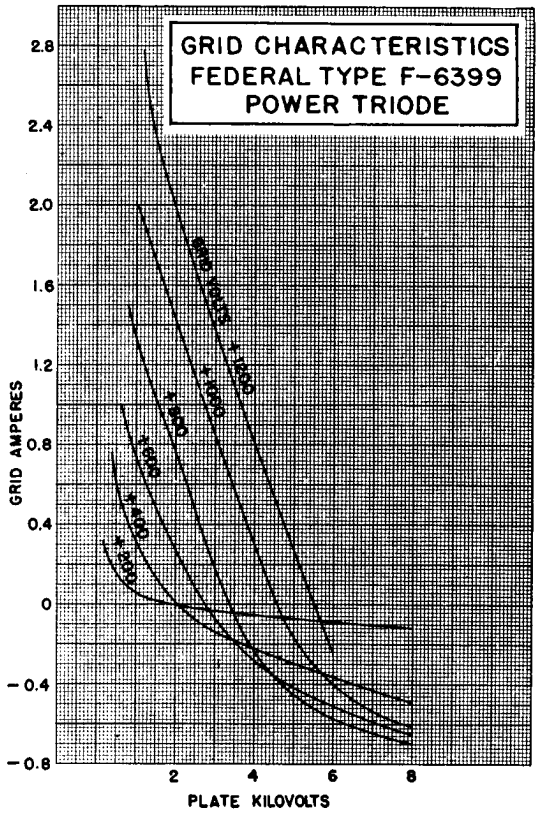

FEDERAL POWER TRIODE
Type F-6399
6 Kilowatts Plate Dissipation

Grid and Filament leads attached for convenience of equipment designers.

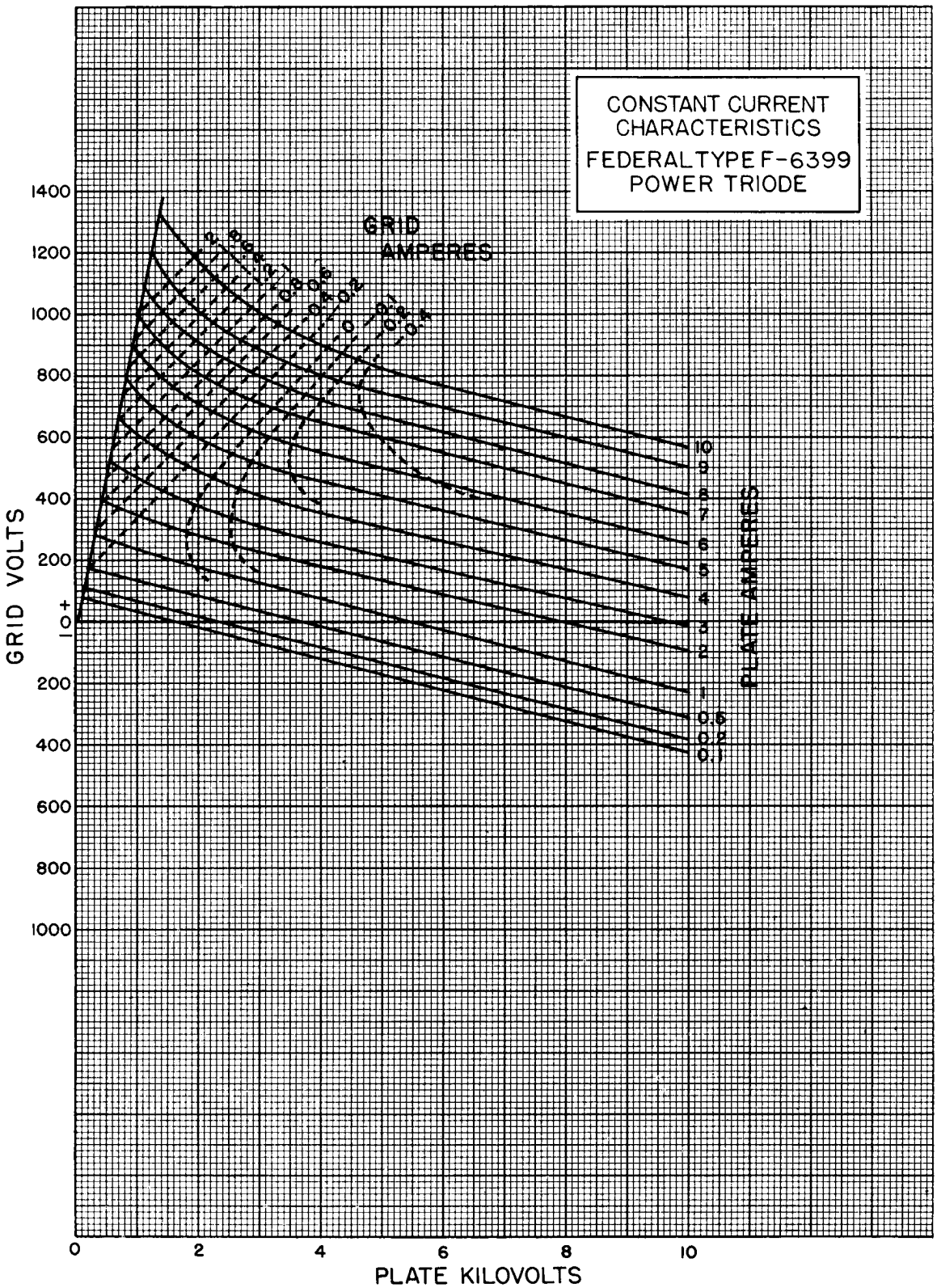

Form F-612 Printed in U. S. A

Federal Telephone and Radio Company
100 Kingsland Road VACUUM TUBE DEPARTMENT Clifton, New Jersey

FEDERAL POWER TRIODE
Type F-6400
6 Kilowatts Plate Dissipation

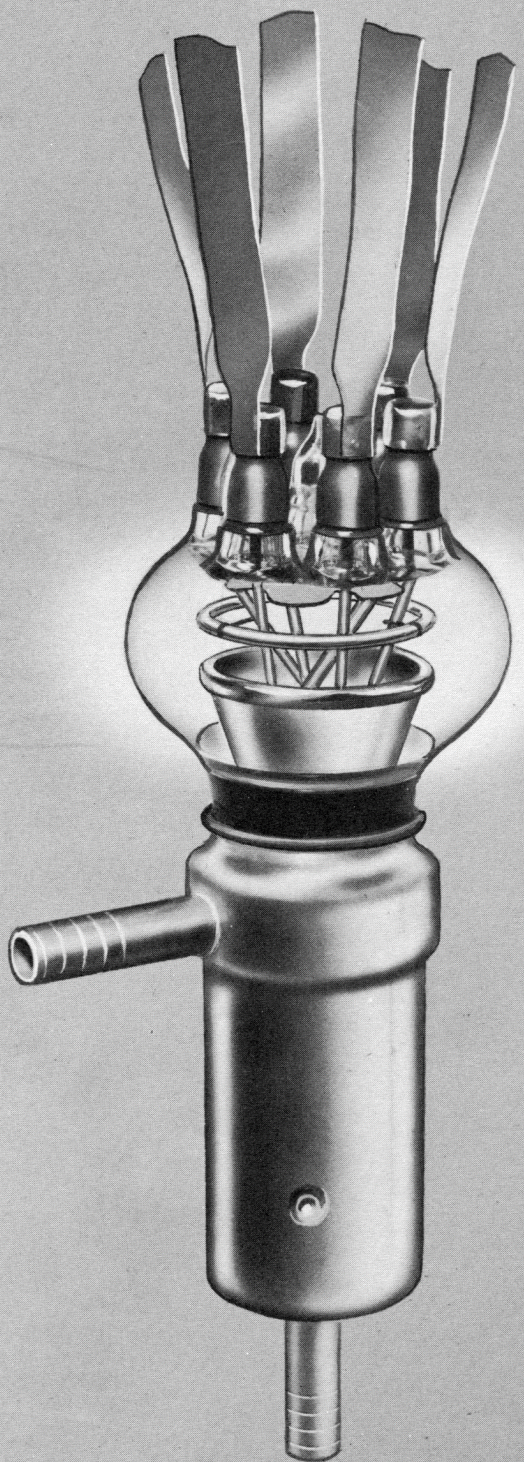

GENERAL DATA

DESCRIPTION:

Federal's Type F-6400 is a three-electrode tube designed for use as a modulator, R-F amplifier and oscillator. The tube has an integral water jacket and is capable of dissipating 6 KW during continuous commercial service. The cathode is a thoriated tungsten filament. Maximum ratings apply up to 30 megacycles. Operation up to 50 megacycles is permissible at reduced ratings.

Electrical:

Filament Voltage	13 Volts
Filament Current	36 Amperes
Amplification Factor, E_c=—200 V, I_b=0.2A	25
Interelectrode Capacitances	
Grid-Plate	13.4 $\mu\mu$f
Grid-Filament	15.0 $\mu\mu$f
Plate-Filament	1.8 $\mu\mu$f

Mechanical:

Mounting Position	Vertical, Anode Down		
Type of Cooling—	Water and Forced Air		
Required Water Flow			
Plate Dissipation	2	4	6 KW
Minimum Water Flow	.5	2	3.5 GPM
Pressure Drop	.1	1	2 PSI
Maximum Glass Temperature			180° C
Net Weight, Approximate			1 1/4 Pounds

Copyright 1954, Federal Telephone and Radio Company

FEDERAL POWER TRIODE
Type F-6400
6 Kilowatts Plate Dissipation

Maximum Ratings vs. Operating Frequency		
Frequency	30	50 Megacycles
Percentage of Maximum Rated Plate Voltage and Plate Input Class C—Telegraphy	100	75 Per Cent

Maximum Ratings and Typical Operating Conditions

RADIO-FREQUENCY POWER AMPLIFIER AND OSCILLATOR—CLASS C TELEGRAPHY

(Key down conditions per tube without amplitude modulation)

Maximum Ratings, Absolute Values

DC Plate Voltage	9,200 Volts
DC Grid Voltage	—1,500 Volts
DC Plate Current	2.0 Amperes
DC Grid Current	.2 Amperes
Plate Input	18 Kilowatts
Plate Dissipation	6 Kilowatts

Typical Operation

DC Plate Voltage	9,000 Volts
DC Grid Voltage	—800 Volts
Peak R-F Grid Voltage	1,510 Volts
DC Plate Current	2.0 Amperes
DC Grid Current, approx.	.150 Amperes
Driving Power, approx.	225 Watts
Power Output	12 Kilowatts

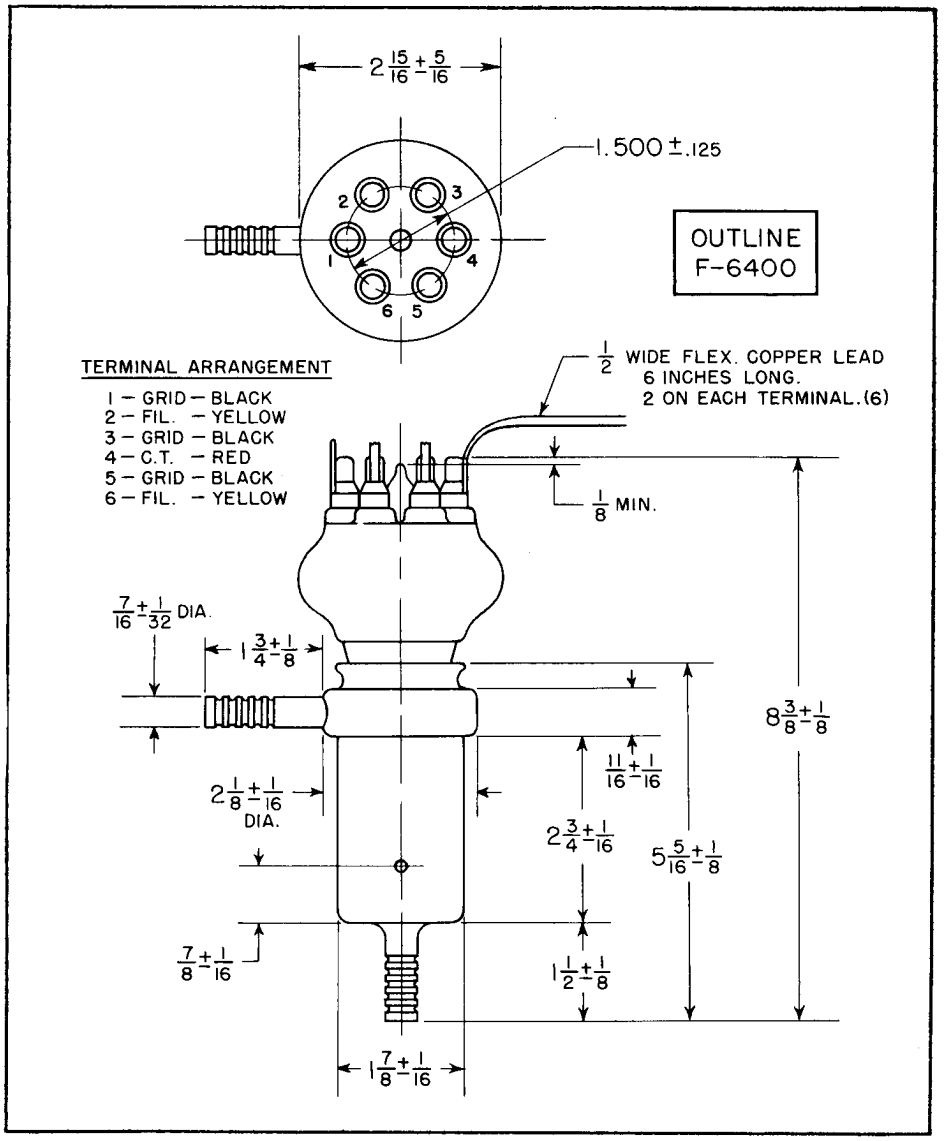

High efficiency radiator allows reduced blower cost in new equipment design.

FEDERAL POWER TRIODE
Type F-6400
6 Kilowatts Plate Dissipation

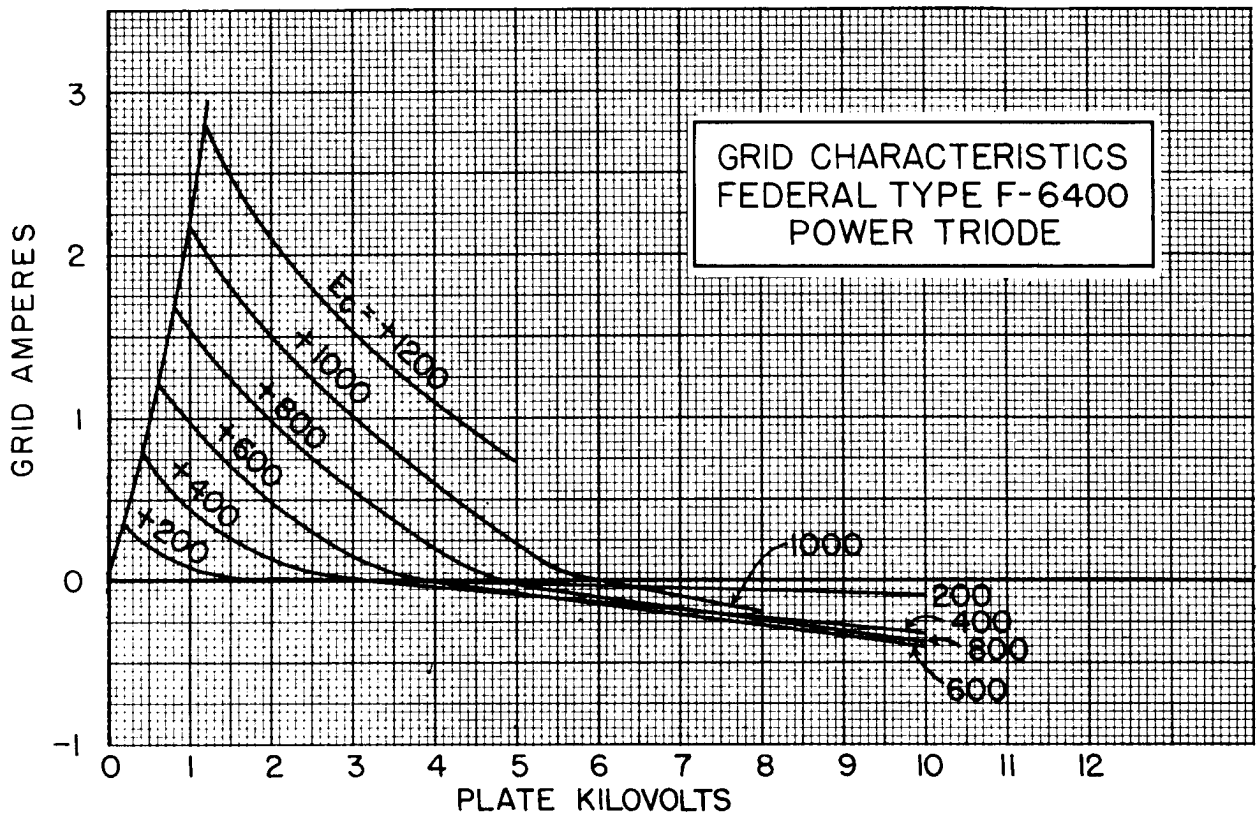

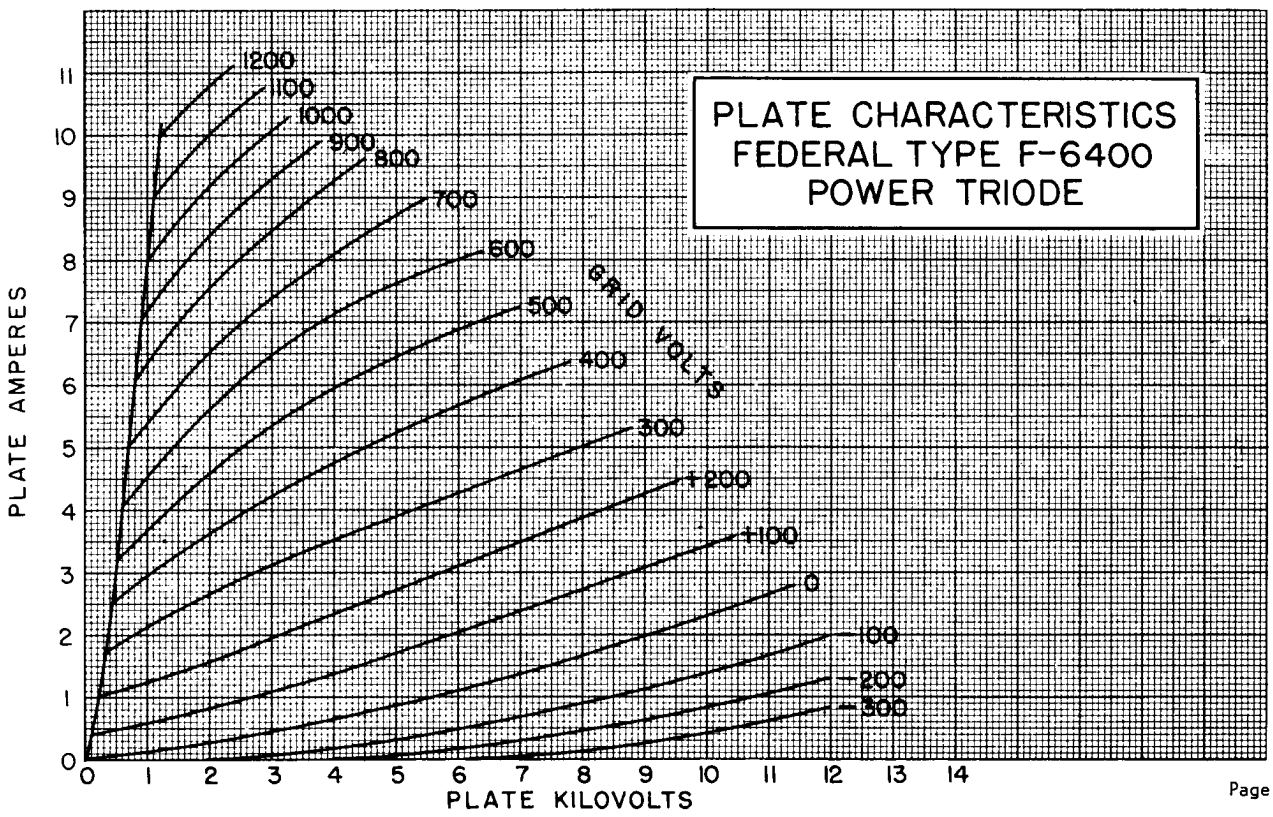

FEDERAL POWER TRIODE
Type F-6400
6 Kilowatts Plate Dissipation

Grid and Filament leads attached for convenience of equipment designers.

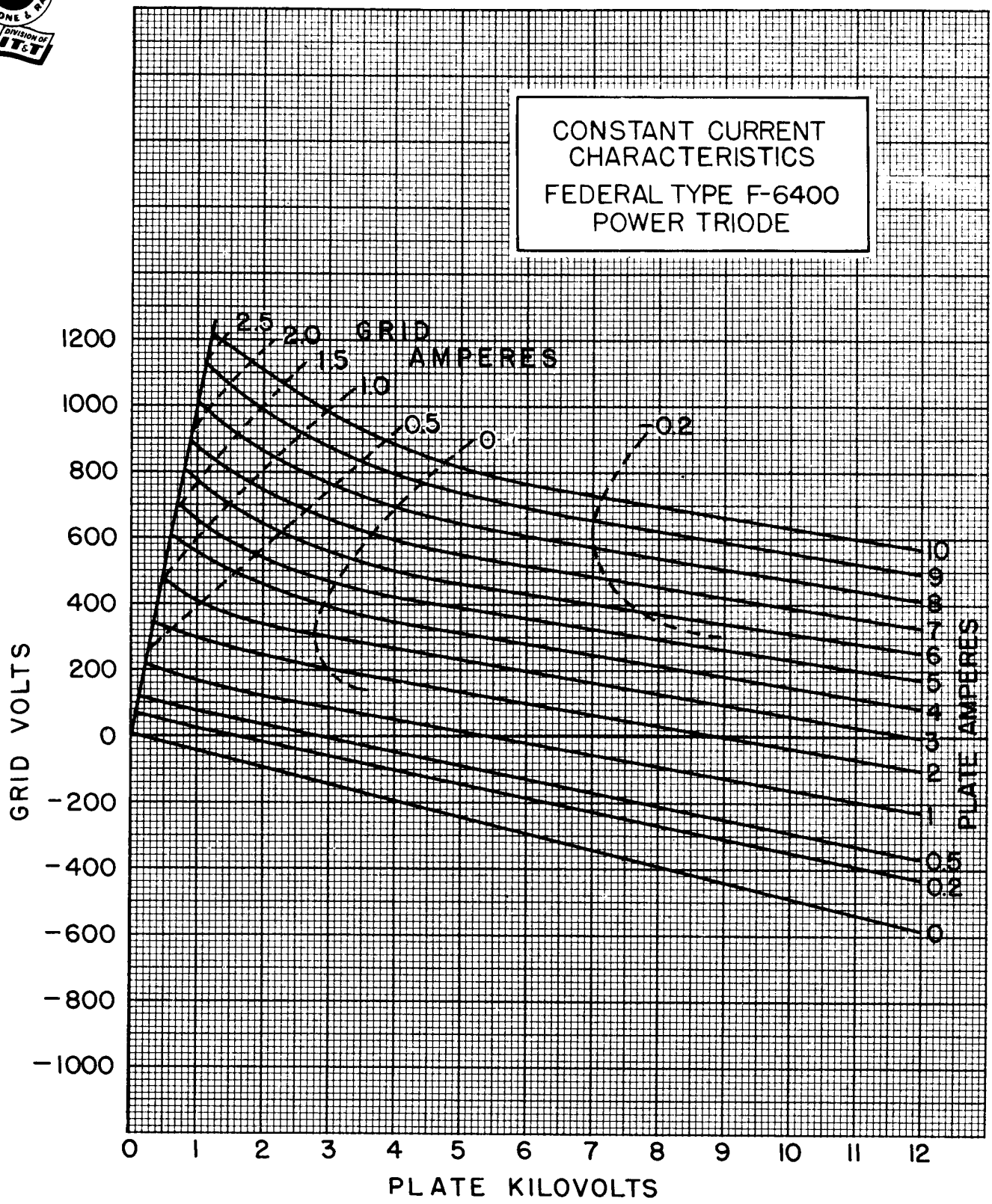

Form F-628 Printed in U.S.A.

Federal Telephone and Radio Company
100 Kingsland Road VACUUM TUBE DEPARTMENT Clifton, New Jersey

engineering TUBE DATA

F-6401
PULSE
TRIODE

ITT Components Division

DESCRIPTION

The F-6401 is a three-electrode tube designed for pulse operation as an oscillator or amplifier in the UHF region. The anode is capable of dissipating 1 kilowatt of plate power, exclusive of filament excitation power, during Continuous Commercial Service. Water cooling is used for the anode and forced-air cooling is required for the bulb and seals. The cathode is a thoriated-tungsten filament. Maximum ratings apply up to 600 megacycles.

ELECTRICAL

Filament Voltage	4.25 volts
Filament Current	400 amperes
Filament Starting Current	1000 amperes
Filament Cold Resistance	0.0018 ohms
Amplification Factor	
I_b = 10 amps; E_c = -100 volts	12
Peak Cathode Current	145 amperes
Direct Inter-electrode Capacitance	
Grid-Plate	25 μμf
Grid-Filament	36 μμf
Plate-Filament	2.1 μμf

MECHANICAL

Mounting Position	Vertical, Anode End Up or Down
Water Flow Required Anode (Note 1)	1 min. gpm
Outlet Water Temperature	70 max. °C
Air Flow Required (Note 2)	10 min. cfm
Net Weight, approximate	3-1/2 pounds
Maximum Glass Temperature	180°C

Note 1: A special water connection is required as specified on the outline drawing. Water cooling must be maintained for a period of 2 minutes after shutdown of filament power.

Note 2: Air flow on the cathode and grid terminals and on the bulb must be sufficient to limit the maximum temperature to 180°C.

ITT COMPONENTS DIVISION
INTERNATIONAL TELEPHONE AND TELEGRAPH CORPORATION
P. O. BOX 412, CLIFTON, NEW JERSEY

RATINGS

Grounded Grid Circuit
Plate Pulsed Oscillator and Amplifier

Maximum Ratings, Absolute Values

D-C Plate Voltage	17 max. kv
D-C Grid Voltage	-2 max. kv
D-C Plate Current (peak)	75 max. amperes
D-C Grid Current (peak)	5 max. amperes
Pulse Length	15 max. μsec.
Duty Factor	.002 max.
Plate Input	1.6 max. kw
Plate Dissipation	1.0 max. kw

The above are limiting values beyond which the serviceability of the tube will be impaired if exceeded. Each maximum rating must be considered in relation to every other to insure that under no conditions any maximum rating will be exceeded.

Typical Operation

D-C Plate Voltage	12 kv
D-C Grid Voltage	-.5 kv
D-C Plate Current (average)	.090 amperes
D-C Grid Current (average)	.005 amperes
Pulse Length	15 μsec.
Duty Factor	.0015
Power Out (during Pulse)	250 kw
Power Gain	4

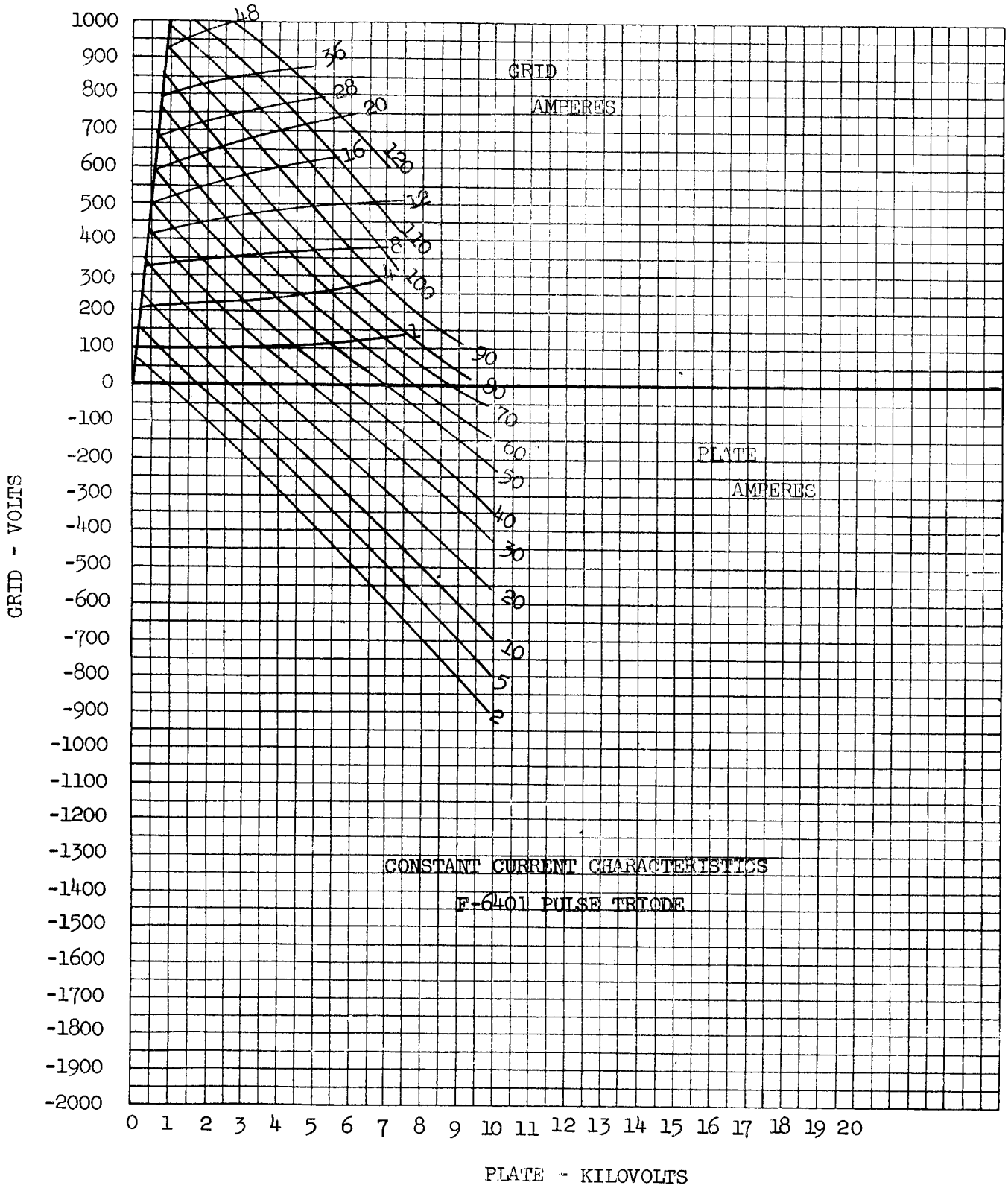

ITT COMPONENTS DIVISION
INTERNATIONAL TELEPHONE AND TELEGRAPH CORPORATION
P. O. BOX 412, CLIFTON, NEW JERSEY

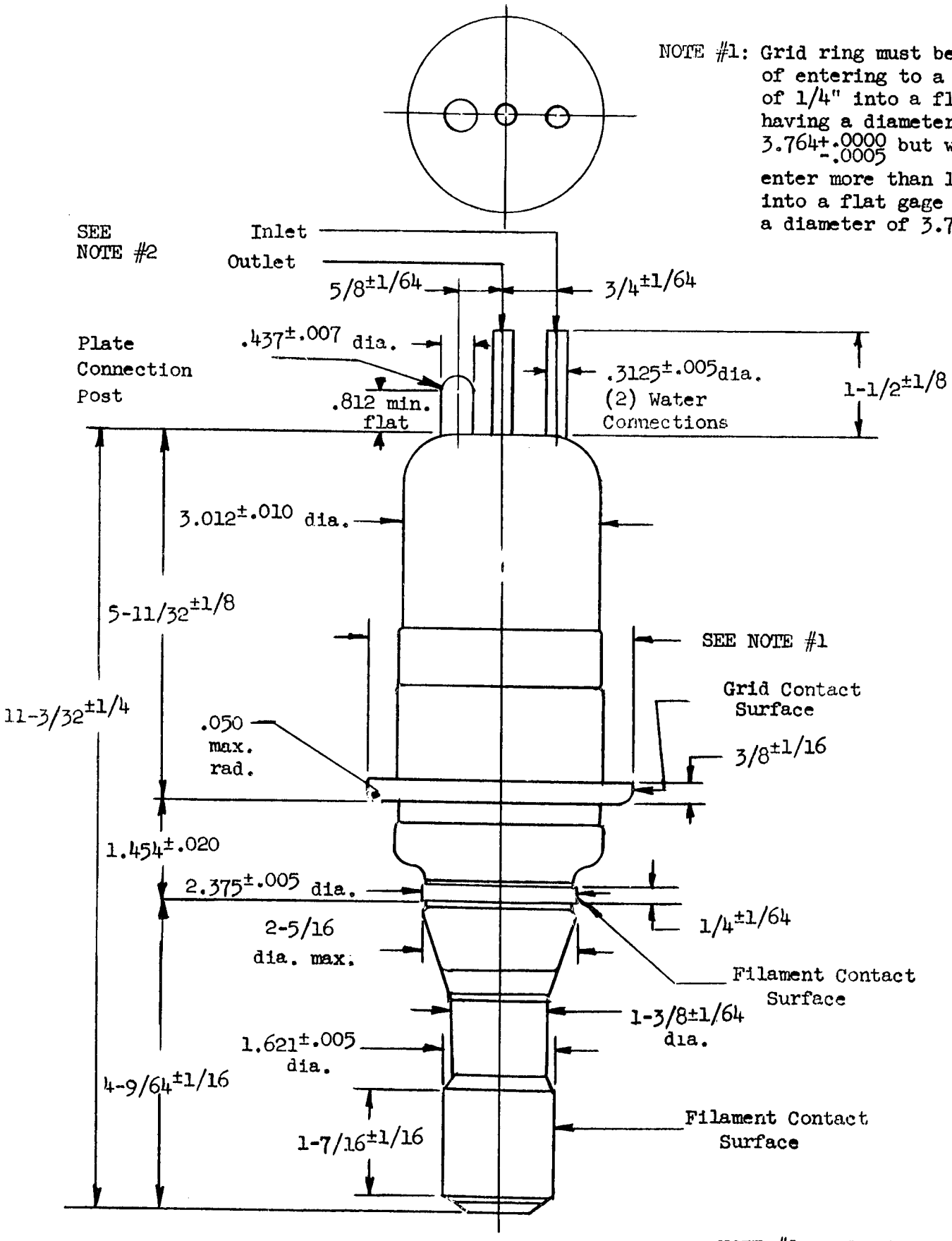

NOTE #1: Grid ring must be capable of entering to a distance of 1/4" into a flat gage having a diameter of $3.764^{+.0000}_{-.0005}$ but will not enter more than 1/16" into a flat gage having a diameter of $3.744^{+.0005}_{-.0000}$

NOTE #2: If tube is operated anode down, reverse designations from those shown to apply to the inlet and outlet.

OUTLINE
F-6401 PULSE TRIODE

ELECTRON TUBE DEPARTMENT ■ COMPONENTS DIVISION
INTERNATIONAL TELEPHONE AND TELEGRAPH CORPORATION, CLIFTON, NEW JERSEY

F-6658
TRAVELING
WAVE TUBE

TENTATIVE

DESCRIPTION:

The F-6658 is a 1 to 5 watt CW traveling wave amplifier tube having 30 db gain and 1700 to 4000 mc frequency range. It is constructed in a rugged metal envelope with a helix type slow wave structure. The integral matching circuit is in 50 ohm coaxial line and is provided with type "N" connectors. The tube is self aligning in the external solenoid which is required to provide a uniform magnetic field. A convergent beam gun and oxide impregnated cathode are used. A control grid suitable for use as a gain control is provided. The tube is suitable for either CW or pulse service, utilizing the full bandwidth or portions of it. It is also suitable for frequency shifting, such as serrodyne operation.

ELECTRICAL RATINGS, ABSOLUTE VALUES:

Heater Voltage	6.3 (±10%)	volts
Heater Current	2.5	amperes
Maximum Anode Voltage (Note 1)	1250	volts
Maximum Shell Current (Note 2)	5	ma
Maximum Collector Voltage (Note 3)	1550	volts
Maximum Collector Dissipation (Note 4)	100	watts
Maximum Control Electrode Voltage (Note 5)	-250	volts

ELECTRICAL INFORMATION:

Maximum Frequency	4000	mc
Minimum Frequency	1700	mc
Minimum Cold Transmission Loss	50	db
Capacitance		
Control Electrode to all other Elements	12	μμfd
All Gun Elements to Shell	4.5	μμfd

MECHANICAL INFORMATION:

Type of Cathode	Oxide Impregnated Unipotential
Base, Small Shell Duodecal, 5 Pin	JEDEC Designation B-5-57
Type of Envelope	Metal
Magnetic Field Strength (Nominal)	750 gauss
Length of Magnetic Field	6.75 inches uniform
Mounting Position	Any
Weight (not including Magnet)	1 pound, 7 ounces
R-F Connections	50 ohm coax with Type N Jack UG-23B/U
Type of Cooling	Forced Air
Glass Temperature	160°C max.
Cooling Air Required (Note 4)	10 cfm

TYPICAL OPERATION AS POWER AMPLIFIER:

Anode Voltage	1000	volts
Shell Current	3	ma
Collector Voltage	1100	volts
Collector Current	47	ma
Control Electrode Voltage	0	volts
Power Output (see Curves)	1	watt
Gain (see Curves)	30	db nominal
Duty Cycle		
R-F	Variable to 1.0	
Beam	1.0	

TYPICAL OPERATION AS LINEAR AMPLIFIER:
(Input powers less than -10 dbm)

Anode Voltage	900	volts
Shell Current	2.0	ma
Collector Voltage	1000	volts
Collector Current	40	ma
Control Electrode Voltage	0	volts
Gain (see Curves)	35	db nominal
Noise Figure	30	db
Duty Cycle		
R-F	Variable to 1.0	
Beam	1.0	

Note 1: All voltages shown are with respect to cathode. Anode and helix are connected internally to the shell. The shell is normally operated at approximate ground potential and the d-c connection is made to the shell of the solenoid.

Note 2: The shell current is the difference between the cathode current and collector current. Since this current, in general, should be minimized, it is desirable to measure the current from shell to ground. It is recommended that overload protection be provided to remove high voltage if the shell current exceeds 5 milliamperes.

Note 3: It is generally desirable to operate the collector at 100 to 200 volts positive with respect to shell, and potential difference between collector and shell should be limited to 300 volts maximum.

Note 4: Forced air cooling of collector is required for average collector power in excess of 10 watts. As the collector power is increased, the air flow required increases. At the maximum collector power of 100 watts, a minimum air flow of 10 cfm through the cooling fins is required.

Note 5: This electrode is a remote cutoff grid, suitable for use as a gain control providing approximately 30 db control range but is not suitable for low level pulsing of the beam. It is recommended that, where feasible, provision should be made to operate the tube with small voltage on this electrode (-5 to -10 volts) as this permits operation of the tube at approximately optimum conditions with very low interception (shell current). It may also be operated fixed at cathode potential, if desired.

OPERATING PROCEDURE:

(1) Insert tube in solenoid, secure in place with stops provided, make connections.

(2) Turn on cooling air, solenoid voltage (adjust to approximately 750 gauss), heater voltage, collector voltage (if used), control electrode voltage (if used).

(3) Raise high voltage to desired value, readjusting magnetic field if necessary to obtain minimum shell current. At no time should shell current exceed 5 ma.

(4) After initial set up as above, tube voltages may be applied simultaneously; however, it is recommended that heater voltage, solenoid voltage, and cooling air be supplied at least 2 minutes before applying high voltage. Observance of the 5 ma maximum limit for shell current is essential to prevent tube damage.

The data presented here is representative of operation of this type as an amplifier with maximum bandwidth and does not indicate the maximum performance obtainable under specific conditions, particularly narrower bandwidths.

Standard solenoids to operate this tube are available, and solenoids designed for particular applications can be supplied.

Additional information for specific applications can be obtained from the

Electron Tube Applications Section
ITT Components Division
Box 7065
ROANOKE, VIRGINIA

TYPICAL CHARACTERISTICS

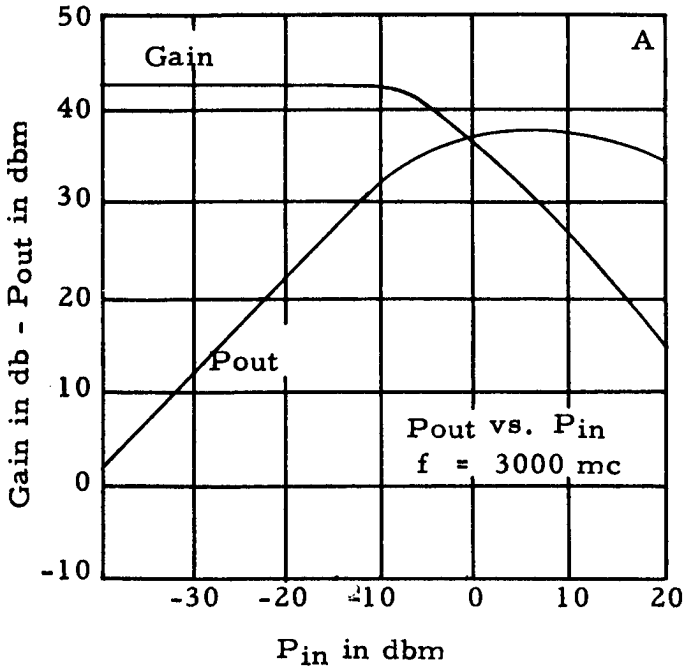

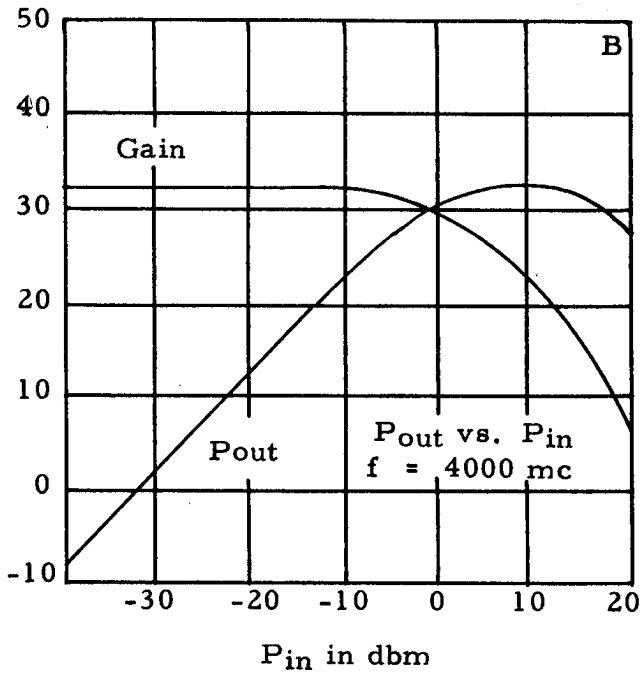

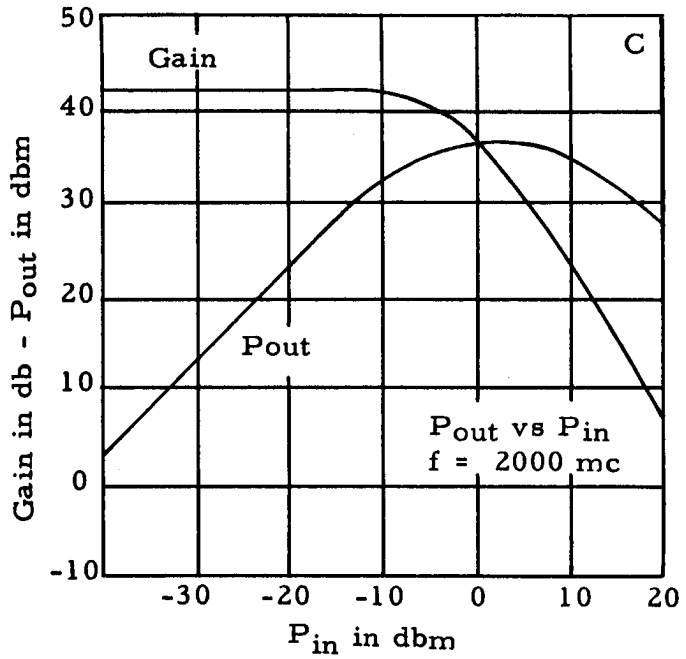

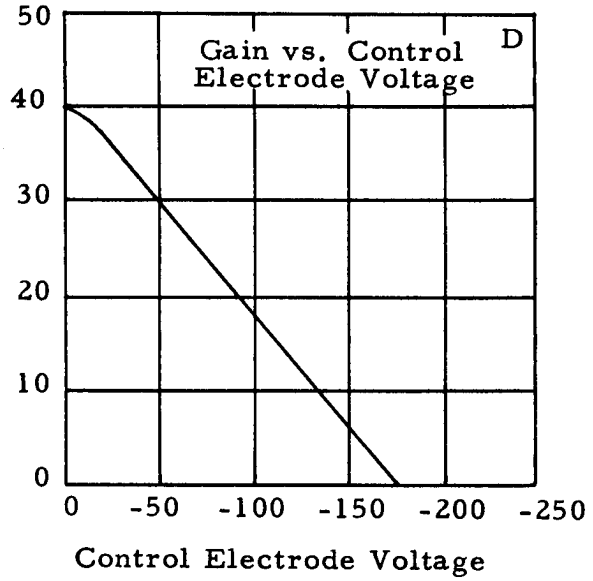

TYPICAL CHARACTERISTICS

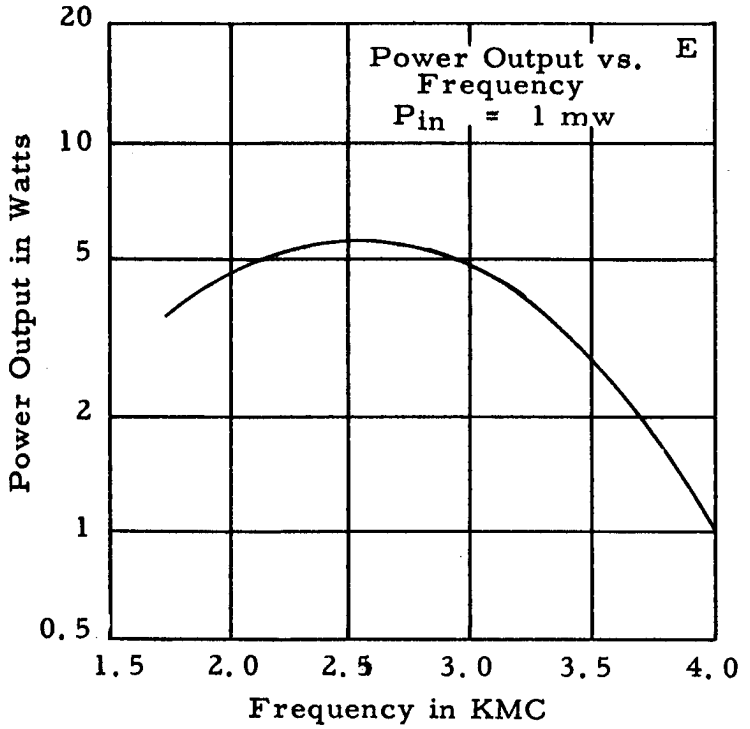

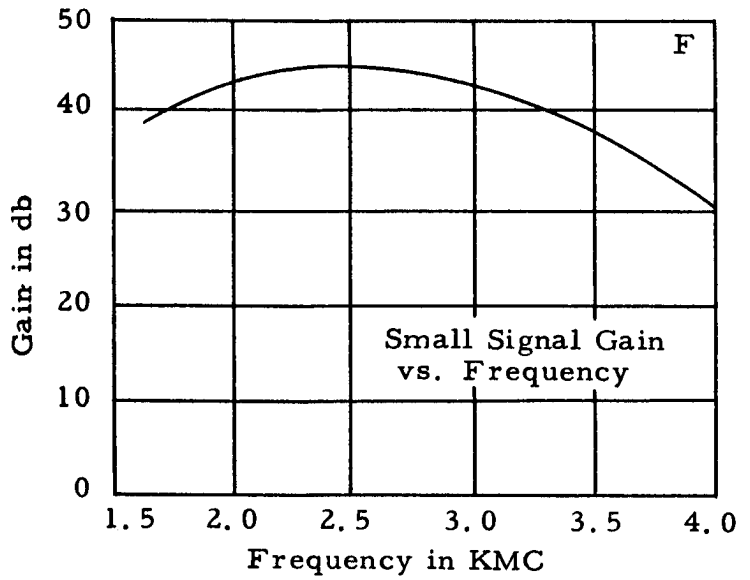

All curves shown with magnetic field set for minimum shell current in range of 600 to 750 gauss.

Curves A, B, C, and E voltage is set for maximum P_{out} at f = 4.0 KMC, P_{in} = mw (approx. 1000 volts).

Curve D shows typical shape and range of control electrode characteristic.

Curve F voltage is set for maximum gain at f = 4.0 KMC, P_{in} = -20 dbm (approx. 900 volts).

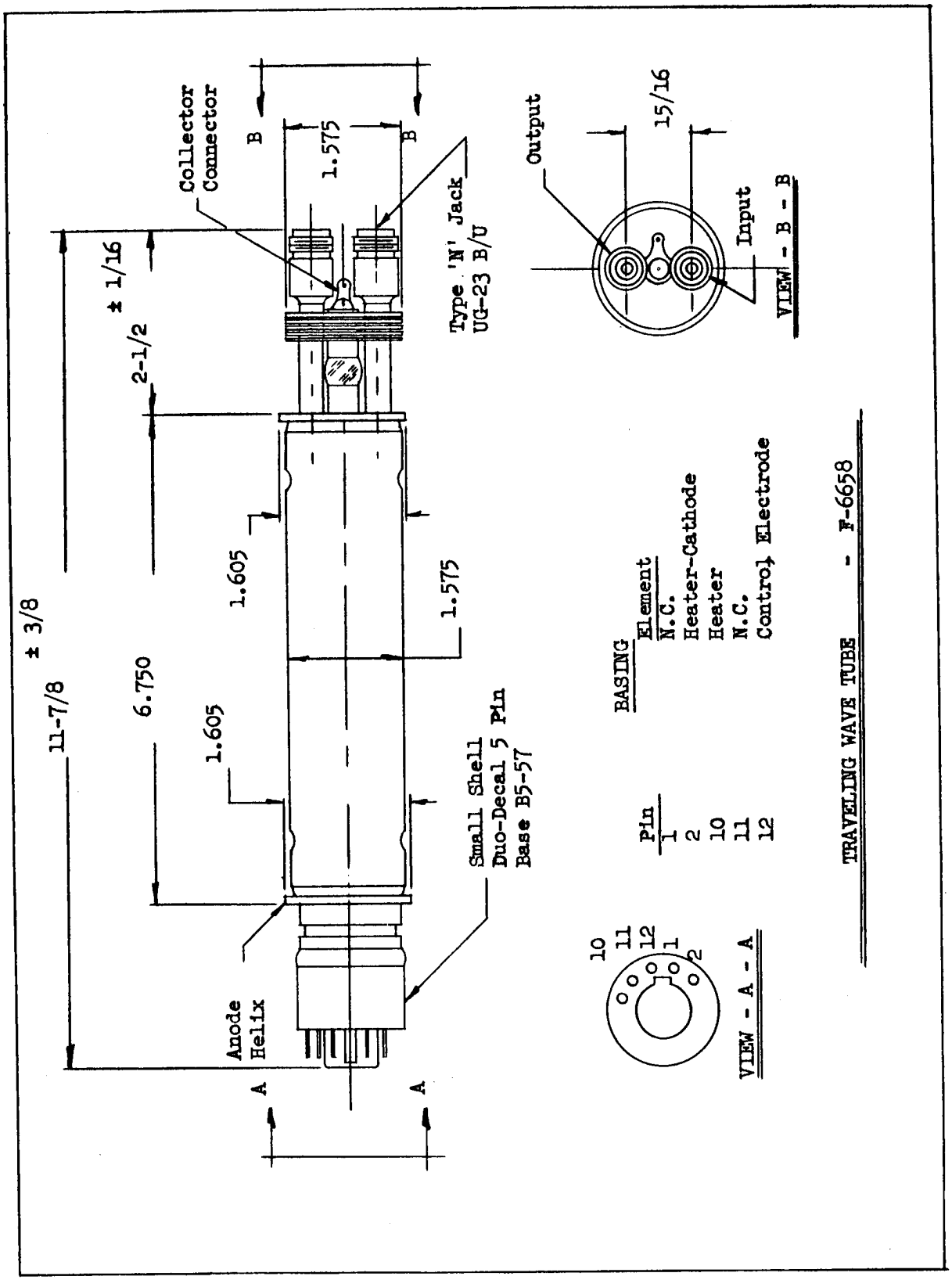
Collector Connector
B
1.575
B
Type 'N' Jack UG-23 B/U
± 1/16
2-1/2
± 3/8
11-7/8
6.750
1.605
1.605
1.575
Small Shell Duo-Decal 5 Pin Base B5-57
Anode Helix
A
A
Output
15/16
Input
VIEW - B - B
BASING
Pin
Element
1
N.C.
2
Heater-Cathode
10
Heater
11
N.C.
12
Control Electrode
10 11 12 1 2
VIEW - A - A
TRAVELING WAVE TUBE - F-6658

engineering TUBE DATA

F-6691
POWER TRIODE

ITT Components Division

DESCRIPTION

The F-6691 is a three electrode tube designed for use as an industrial oscillator. The anode is capable of dissipating 17 kilowatts during Continuous Commercial Service. Cooling is accomplished by forced air. The cathode is a thoriated tungsten filament and may be operated on d-c or single phase a-c. Maximum ratings apply up to 30 megacycles.

ELECTRICAL

Filament Voltage	5.0 volts
Filament Current	260 amperes
Filament Starting Current	1000 amperes
Filament Cold Resistance	.002 ohms
Filament Heating Time	15 seconds
Amplification Factor	
E_c = -100 v. I_b = 1.5 amps	21
Peak Cathode Current, Note 1	40 amperes
Direct Inter-electrode Capacitance	
Grid-Plate	55 μμf
Grid-Filament	57 μμf
Plate-Filament	5.0 μμf

Note 1: Represents maximum usable cathode current (plate current plus grid current) for any condition of operation.

MECHANICAL

Mounting Position			Vertical, anode down
Type of Cooling			Forced Air
Maximum Incoming Air Temperature			45 °C
Required Air Flow on Anode			
Plate Dissipation - kw	17	14	12
Air Flow - cfm	1000	800	700
Pressure - inches of water	3.5	2.3	1.7
Net Weight, approximate			39 lbs

ITT COMPONENTS DIVISION
INTERNATIONAL TELEPHONE AND TELEGRAPH CORPORATION
P. O. BOX 412, CLIFTON, NEW JERSEY

MAXIMUM RATINGS AND TYPICAL OPERATING CONDITIONS

Radio-Frequency Power Amplifier & Oscillator - Class C Telegraphy
(Key down conditions per tube without Amplitude Modulation)

Maximum CCS Ratings, Absolute Values:	Below 2 mc	2 mc to 30 mc	
D-C Plate Voltage	15,000	12,500	max. volts
D-C Grid Voltage	-2,000	-2,000	max. volts
D-C Plate Current	6	6	max. amps
D-C Grid Current	.8	.8	max. amps
Plate Input	60	54	max. kw
Plate Dissipation	17	17	max. kw

Typical Operation

D-C Plate Voltage	15,000	12,500	10,000	7,500	volts
D-C Grid Voltage	-1,600	-1,300	-1,100	-800	volts
Peak R-F Grid Voltage	2140	1820	1600	1360	volts
D-C Plate Current	3.9	4.25	4.1	5.4	amps
D-C Grid Current, approx.	.570	.500	.750	.690	amps
Driving Power, approx.	1200	900	1200	935	watts
Power Output, approx.	47.0	42.0	32.5	30.0	kw

Modulation essentially negative may be used if the positive peak of the envelope does not exceed 115 per cent of the carrier conditions.

RATINGS VERSUS FREQUENCY

Maximum ratings apply up to 30 megacycles. The tube may be operated at higher frequencies provided the maximum values of plate voltage and power input are reduced according to the tabulation below (other maximum ratings are the same as shown above). Special attention should be given to adequate ventilation of the bulb at these frequencies.

Frequency	30	40	50	megacycles
Percentage of Maximum Rated Plate Voltage & Plate Input	100	80	50	per cent

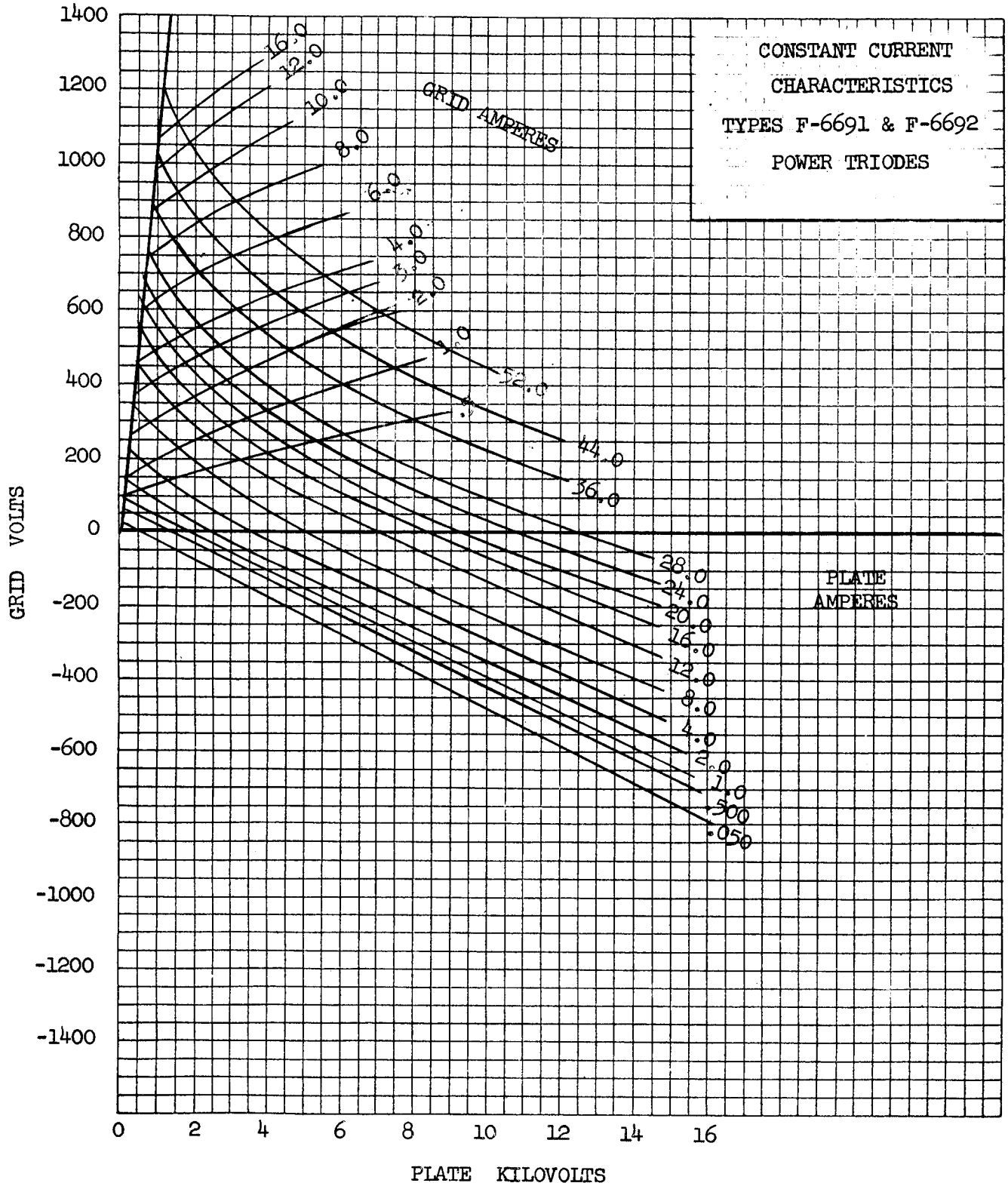

ITT COMPONENTS DIVISION
INTERNATIONAL TELEPHONE AND TELEGRAPH CORPORATION
P. O. BOX 412, CLIFTON, NEW JERSEY

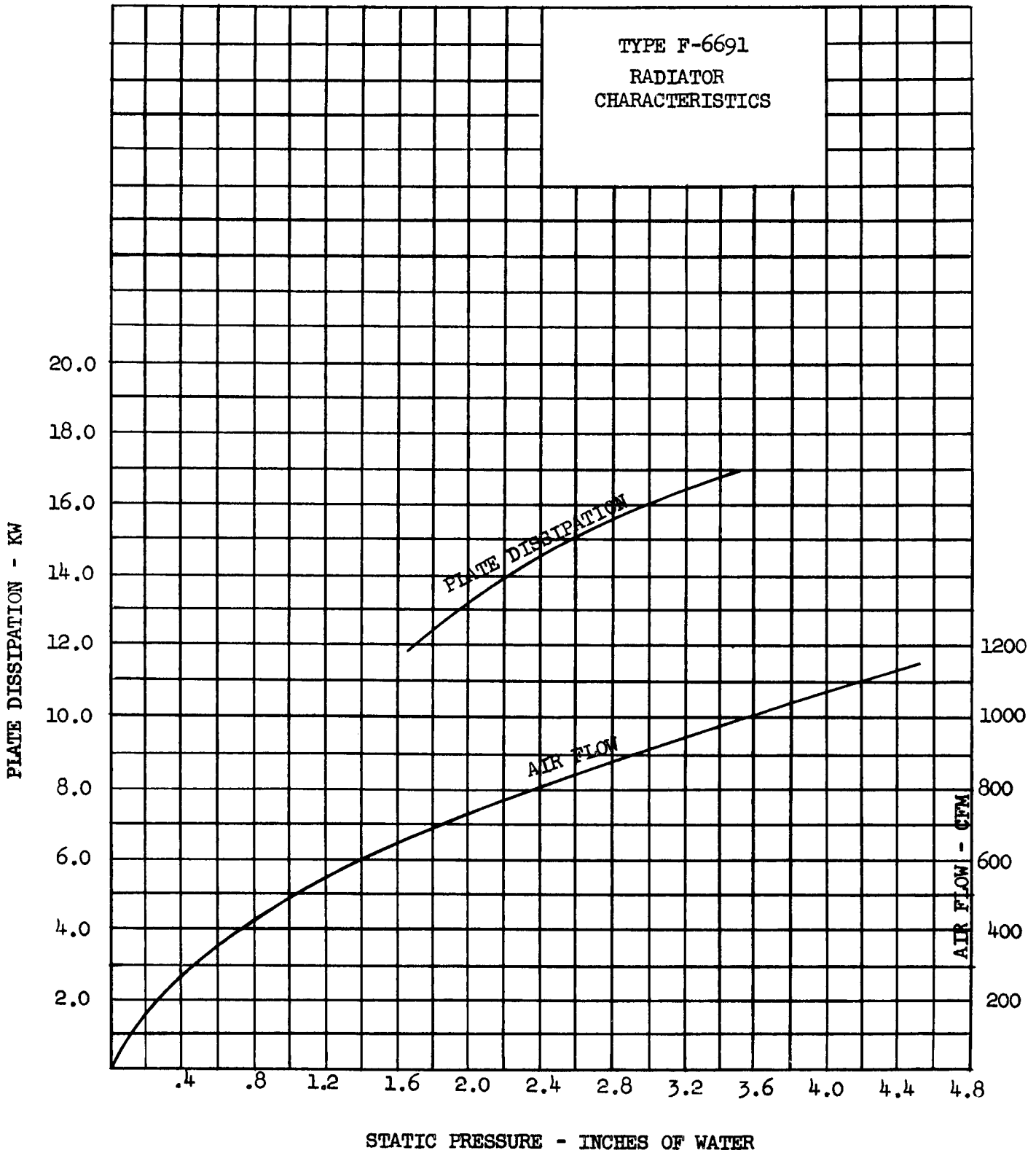
TYPE F-6691
RADIATOR
CHARACTERISTICS
PLATE DISSIPATION - KW
20.0
18.0
16.0
14.0
12.0
10.0
8.0
6.0
4.0
2.0
PLATE DISSIPATION
AIR FLOW
1200
1000
800
600
400
200
AIR FLOW - CFM
.4
.8
1.2
1.6
2.0
2.4
2.8
3.2
3.6
4.0
4.4
4.8
STATIC PRESSURE - INCHES OF WATER

TERMINALS

BLACK = Grid
YELLOW = Fil. 1
RED = Fil. 2

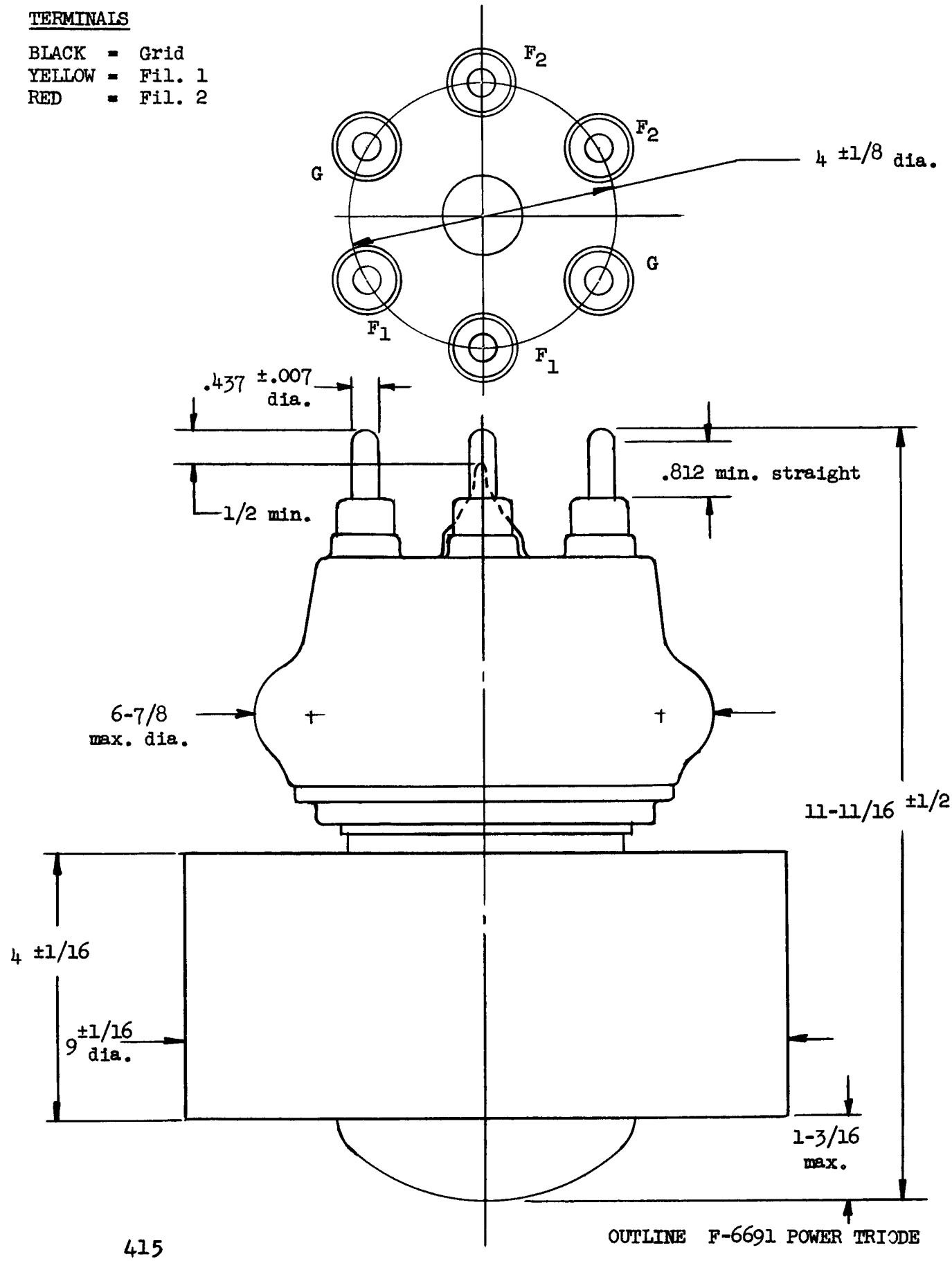

OUTLINE F-6691 POWER TRIODE

ITT COMPONENTS DIVISION
INTERNATIONAL TELEPHONE AND TELEGRAPH CORPORATION
P. O. BOX 412, CLIFTON, NEW JERSEY

DESCRIPTION

The F-6696 and F-6697 are three electrode tubes designed for use as radio frequency amplifiers, oscillators or Class B modulators. The rugged coaxial stem structure provides high dissipation, low inductance r-f electrode terminals. The cathode is a thoriated tungsten filament.

The F-6696 has a water cooled, heavy wall anode capable of 60 kw dissipation. The F-6697 has a forced-air cooled copper anode-radiator assembly of brazed construction capable of 35 kw dissipation.

ELECTRICAL

Filament Voltage	13	volts
Filament Current	205	amperes
Filament Starting Current	800	amperes
Filament Cold Resistance	.0073	ohms
Amplification Factor	20	
Inter-Electrode Capacitances		
Grid-Plate	55	μμf
Grid-Filament	76	μμf
Plate-Filament	2.7	μμf

MECHANCIAL

Mounting Position						Vertical, Anode down	
Max. Glass & Seal Temperature *						180°	C
	F-6696			F-6697			
Plate Dissipation	60	45	30	35	25	15	kilowatts
Water Flow	18	13	8	-	-	-	gpm
Water Jacket Pressure Drop	7	4	2	-	-	-	psi
Air Flow **	-	-	-	1700	1000	440	cfm
Static Air Pressure	-	-	-	8.0	2.8	.6	inches of water
Net Weight, approx.		17			37		lbs

* At the upper frequencies, special attention should be given to provide adequate cooling to the seals to limit the temperature to 180°C max.; up to 150 cfm air flow may be required.

** Maximum incoming air temperature of 50°C at sea level.

MAXIMUM RATINGS AND TYPICAL OPERATING CONDITIONS

Audio-Frequency Power Amplifier and Modulator - Class B

Maximum Ratings, Absolute Values

D-C Plate Voltage	16,000	volts
Max. Signal D-C Plate Current [2]	11	amperes
Max. Signal Plate Input [2]		
F-6696	120	kilowatts
F-6697	110	kilowatts
Plate Dissipation [2]		
F-6696	60	kilowatts
F-6697	35	kilowatts

Typical Operation
(Unless otherwise specified, values are for two tubes)

		F-6696	
D-C Plate Voltage	10,000	12,000	volts
D-C Grid Voltage	-450	-600	volts
Peak A-F Grid-to-Grid Voltage	1,750	2,120	volts
Peak A-F Plate-to-Plate Voltage	16,000	19,200	volts
Zero Signal D-C Plate Current	3.0	2.0	amperes
Max. Signal D-C Plate Current	17.4	20.0	amperes
Effective Load Resistance, Plate-to-Plate	1,170	1,230	ohms
Max. Signal Driving Power, approx.	550	600	watts
Max. Signal Power Output, approx.	110	152	kilowatts

[2] Averaged over any audio frequency cycle of sine-wave form

Radio-Frequency Power Amplifier - Class B
(Carrier conditions per tube for use with a max. modulation factor of 1.0)

Maximum Ratings, Absolute Values

D-C Plate Voltage	16,000	volts
D-C Plate Current	9.0	amperes
Plate Input		
F-6696	90	kilowatts
F-6697	55	kilowatts
Plate Dissipation		
F-6696	60	kilowatts
F-6697	35	kilowatts

Typical Operation		F-6696	
D-C Plate Voltage	12,000	12,000	volts
D-C Grid Voltage	-550	-550	volts
Peak R-F Grid Voltage	510	640	volts
D-C Plate Current	4.3	6.8	amperes
Peak R-F Plate Voltage	5,300	5,300	volts
D-C Grid Current	0	0	milliamperes
R-F Load Resistance	780	500	ohms
Driving Power, approx. *	450	1,500	watts
Power Output, approx.	18	28	kilowatts

* At crest of audio-frequency cycle
with modulation factor of 1.0

Plate-Modulated Radio-Frequency Power Amplifier - Class C Telephony
(Carrier conditions per tube for use with a max. modulation factor of 1.0)

Maximum Ratings, Absolute Values

D-C Plate Voltage	10,000	volts
D-C Grid Voltage	-3,200	volts
D-C Plate Current	8.5	amperes
D-C Grid Current	2.0	amperes
Plate Input	81	kilowatts
Plate Dissipation		
F-6696	40	kilowatts
F-6697	23	kilowatts

Typical Operation

D-C Plate Voltage	9,500	volts
D-C Grid Voltage	-1,600	volts
Peak R-F Grid Voltage	2,300	volts
Peak R-F Plate Voltage	7,800	volts
D-C Plate Current	8.4	amperes
D-C Grid Current	0.90	amperes
R-F Load Resistance	510	ohms
Driving Power, approx.	2.0	kilowatts
Power Output, approx.	60	kilowatts

Radio-Frequency Power Amplifier and Oscillator - Class C Telegraphy
(Key down conditions per tube without amplitude modulation) ***

Maximum Ratings, Absolute Values

D-C Plate Voltage	16,000	volts
D-C Grid Voltage	-3,200	volts
D-C Plate Current	11	amperes
D-C Grid Current	2.0	amperes
Plate Input	120	kilowatts
Plate Dissipation		
F-6696	60	kilowatts
F-6697	35	kilowatts

Typical Operation

D-C Plate Voltage	10,000	15,000	volts
D-C Grid Voltage	-1,200	-1,600	volts
Peak R-F Grid Voltage	1,900	2,120	volts
Peak R-F Plate Voltage	8,000	12,500	volts
D-C Plate Current	10	7.0	amperes
D-C Grid Current, approx.	0.81	0.30	amperes
R-F Load Resistance	440	970	ohms
Driving Power, approx.	1.5	0.60	kilowatts
Power Output, approx.	72	80	kilowatts

*** Modulation essentially negative may be used if the positive peak of the envelope does not exceed 115 per cent of carrier conditions

MAXIMUM FREQUENCY RATINGS

Maximum ratings apply up to 30 mc except as noted. The tube may be operated at higher frequencies provided the maximum values of plate voltage and power input are reduced according to the tabulation below.

Frequency		30	50	70	megacycles
Max. Rated Plate Voltage and Plate Input:	Class B	100	80	55	per cent
	Class C	100	75	50	per cent

CHARACTERISTIC RANGE VALUES FOR EQUIPMENT DESIGN

Characteristics	Conditions		Limits Min.	Bogey	Max.	
Grid Voltage	e_b = 1500 volts; i_b = 48 amps.	e_c:	-	-	1000	volts
Grid Current	e_b = 1500 volts; i_b = 48 amps.	i_c:	-	-	15	amps
Plate Voltage	E_c = 0 V d-c; I_b = 3.0 A d-c	E_b:	1.9	2.4	2.9	Kv d-c
Plate Voltage	E_c = -200 V d-c; I_b = 3.0 A d-c	E_b:	5.6	6.4	7.2	Kv d-c
Grid Voltage	E_b = 15.0 Kv d-c; I_b = 0.020 A d-c	E_c:	-700	-820	-940	V d-c
Plate Power Output	E_b = 15.0 Kv d-c; I_b = 7.0 A d-c; E_c = -1600 V d-c; I_c = 0.30 A d-c	Po:	68	-	-	Kw

Additional information for specific applications can be obtained from the:

ITT Components Division
Electron Tube Applications Section
P. O. Box 412
Clifton, New Jersey

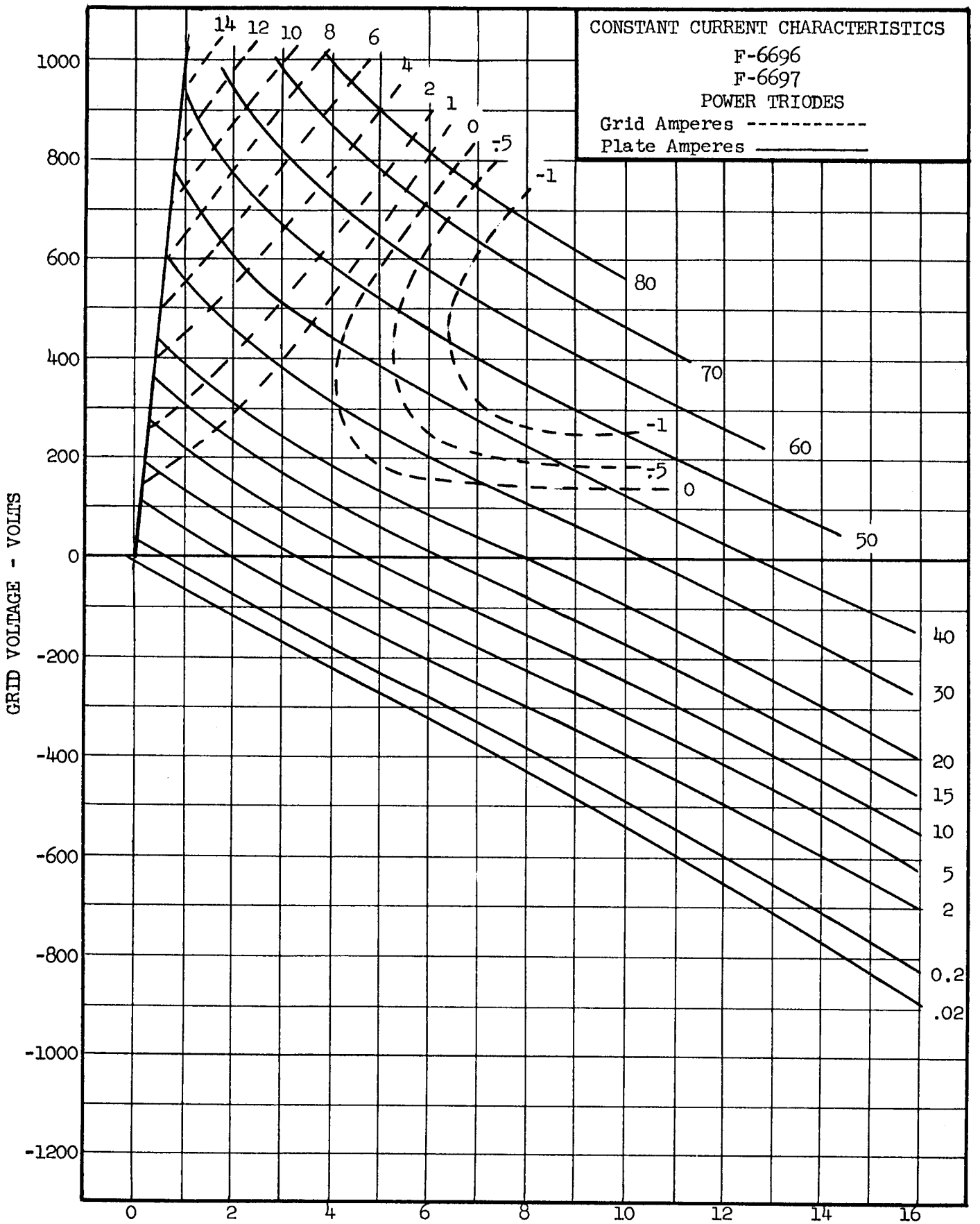
CONSTANT CURRENT CHARACTERISTICS
F-6696
F-6697
POWER TRIODES
Grid Amperes ----------
Plate Amperes ——————
GRID VOLTAGE - VOLTS
PLATE VOLTAGE - KILOVOLTS
1000
800
600
400
200
0
-200
-400
-600
-800
-1000
-1200
0
2
4
6
8
10
12
14
16
14
12
10
8
6
4
2
1
0
-.5
-1
80
70
60
50
40
30
20
15
10
5
2
0.2
.02

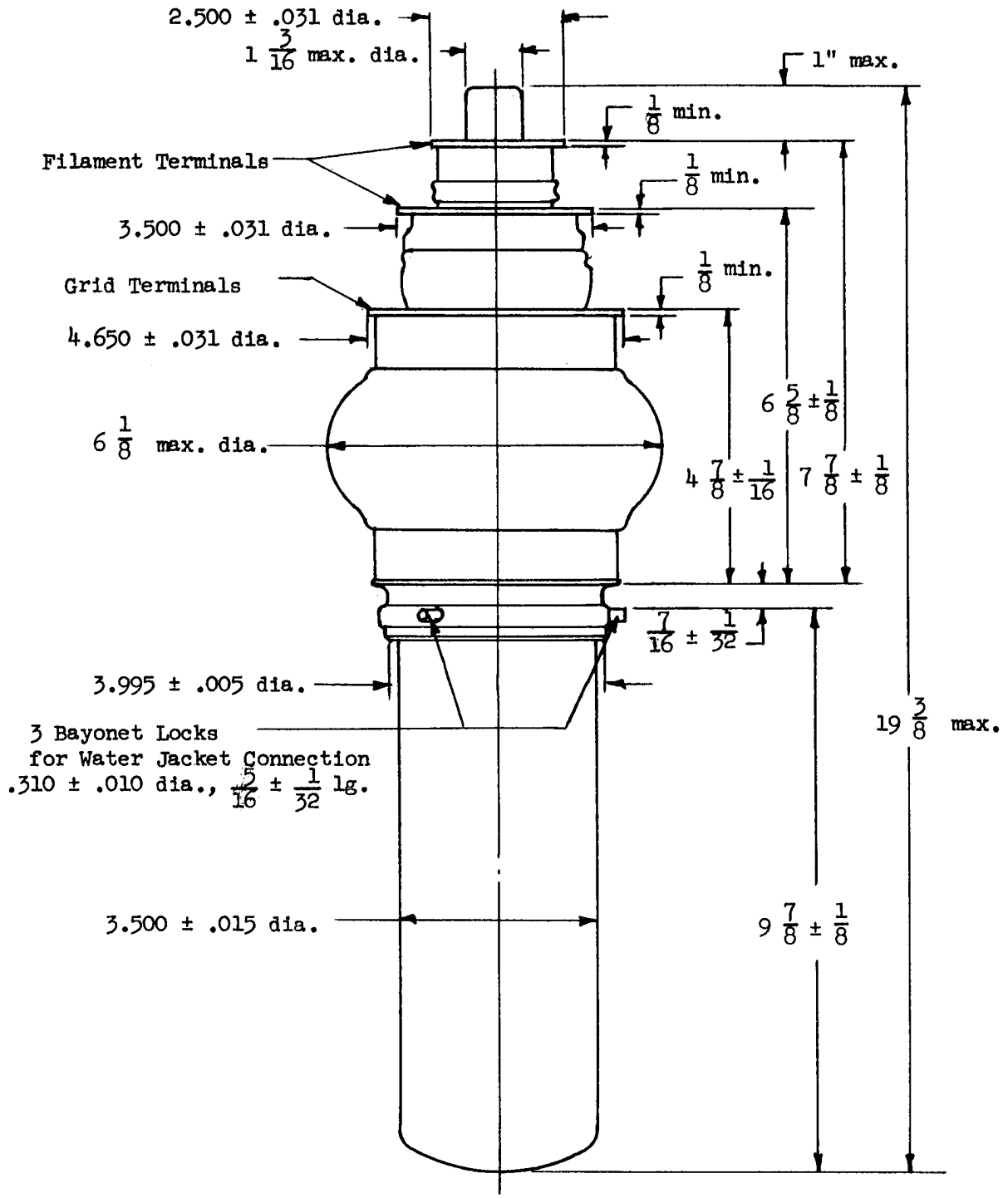

OUTLINE
F-6696 POWER TRIODE

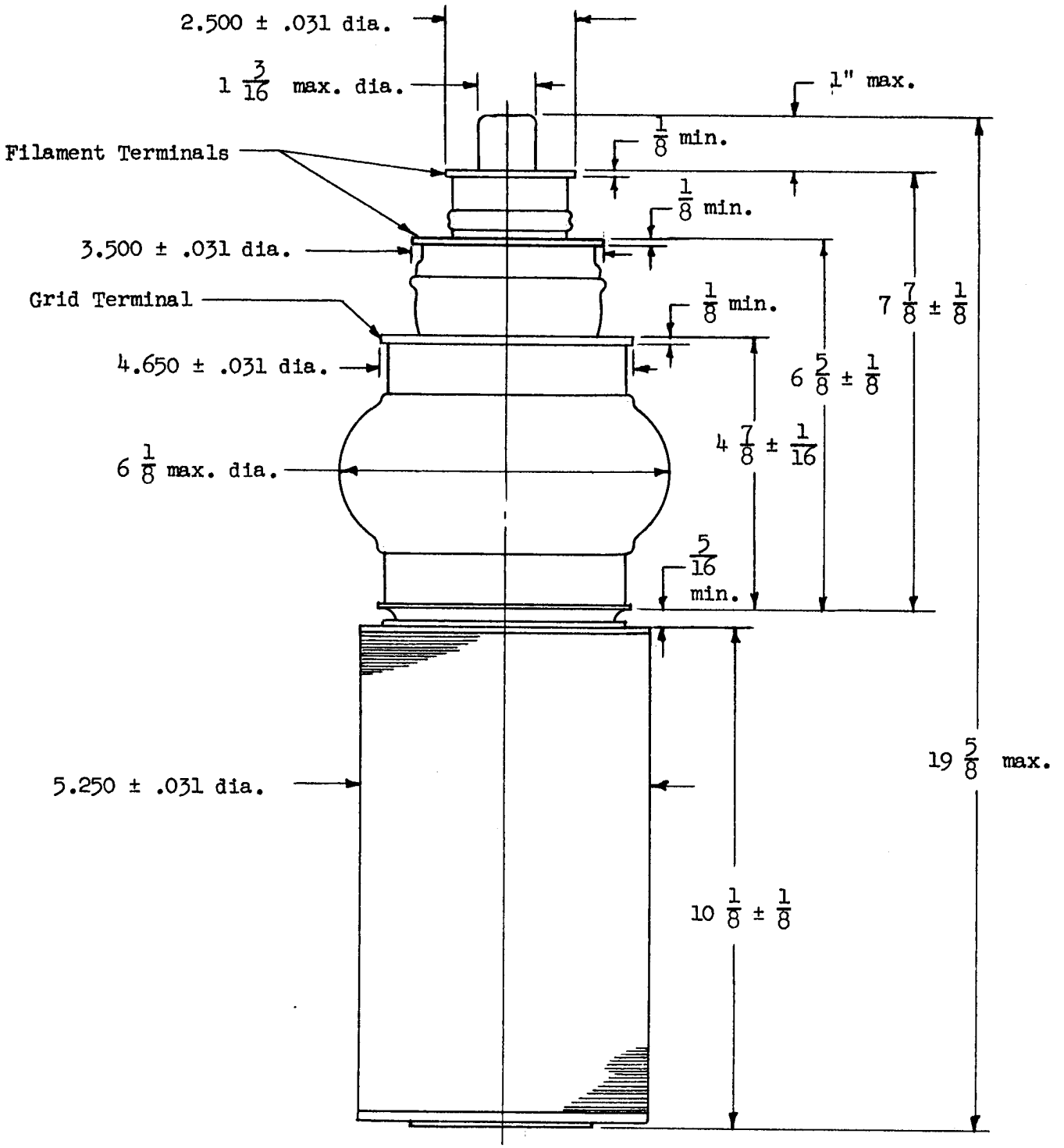

OUTLINE
F-6697 POWER TRIODE

engineering TUBE DATA

F-6800
POWER
TRIODE

ITT *Components Division*

DESCRIPTION

The F-6800 is a three electrode tube designed for use as an industrial oscillator. The anode is capable of dissipating 20 kilowatts during Continuous Commercial Service. Cooling is accomplished by circulating water. The cathode is a thoriated tungsten filament and may be operated on d-c or single phase a-c. Maximum ratings apply up to 22.5 megacycles and operation up to 50 megacycles is permissible at reduced ratings.

ELECTRICAL

Filament Voltage	7.5 volts
Filament Current	107 amperes
Filament Starting Current	300 amperes max.
Filament Cold Resistance	.01 ohms
Filament Heating Time	15 seconds min.
Amplification Factor	
E_c = -200 v. I_b = 1.25 amps	19.5
Direct Inter-electrode Capacitances	
Grid-Plate	26 μμf
Grid-Filament	25 μμf
Plate-Filament	1.0 μμf

MECHANICAL

Mounting Position	Vertical, anode down
Type of Cooling	Water and Forced Air
Water Flow on Anode	8 gpm
Maximum Outgoing Water Temperature	70° C.
Air Flow on Bulb, Note 1	50 cfm
Glass Temperature (at hottest part)	180° C. max.
Net Weight, approximate	6 pounds

Note 1: Operation at frequencies above 15 megacycles may require air flow onto the dish center in order to hold the temperature of the seals and dish below 180°C. The blower required should deliver 50 cfm through a 3" diameter nozzle.

ITT COMPONENTS DIVISION
INTERNATIONAL TELEPHONE AND TELEGRAPH CORPORATION
P. O. BOX 412, CLIFTON, NEW JERSEY

MAXIMUM RATINGS AND TYPICAL OPERATING CONDITIONS

Radio-Frequency Power Amplifier and Oscillator - Class C Telegraphy
(Key down conditions per tube without Amplitude Modulation) Note 2

Maximum CCS Ratings, Absolute Values

D-C Plate Voltage	15,000 max. volts
D-C Grid Voltage	-1,800 max. volts
D-C Plate Current	3.5 max. amperes
D-C Grid Current	.50 max. amperes
Plate Input	45 max. kilowatts
Plate Dissipation	20 max. kilowatts

Typical Operation

D-C Plate Voltage	12,500 volts
D-C Grid Voltage	-1,200 volts
Peak R-F Grid Voltage	2,100 volts
D-C Plate Current	3.5 amperes
D-C Grid Current, approximate	.45 amperes
Driving Power, approximate	900 watts
Power Output, approximate	33 kilowatts

Ratings versus Frequency

Maximum ratings apply up to 22.5 megacycles. The tube may be operated at higher frequencies provided the maximum values of plate voltage and power input are reduced according to the tabulation below (other maximum ratings are the same as shown above). Special attention should be given to adequate ventilation of the bulb at these frequencies.

Frequency	27.5	30	50 Megacycles
Percentage of Maximum Rated Plate Voltage and Plate Input	100	80	50 Per Cent

Note 2: Modulation essentially negative may be used if the positive peak of the envelope does not exceed 115 per cent of the carrier conditions.

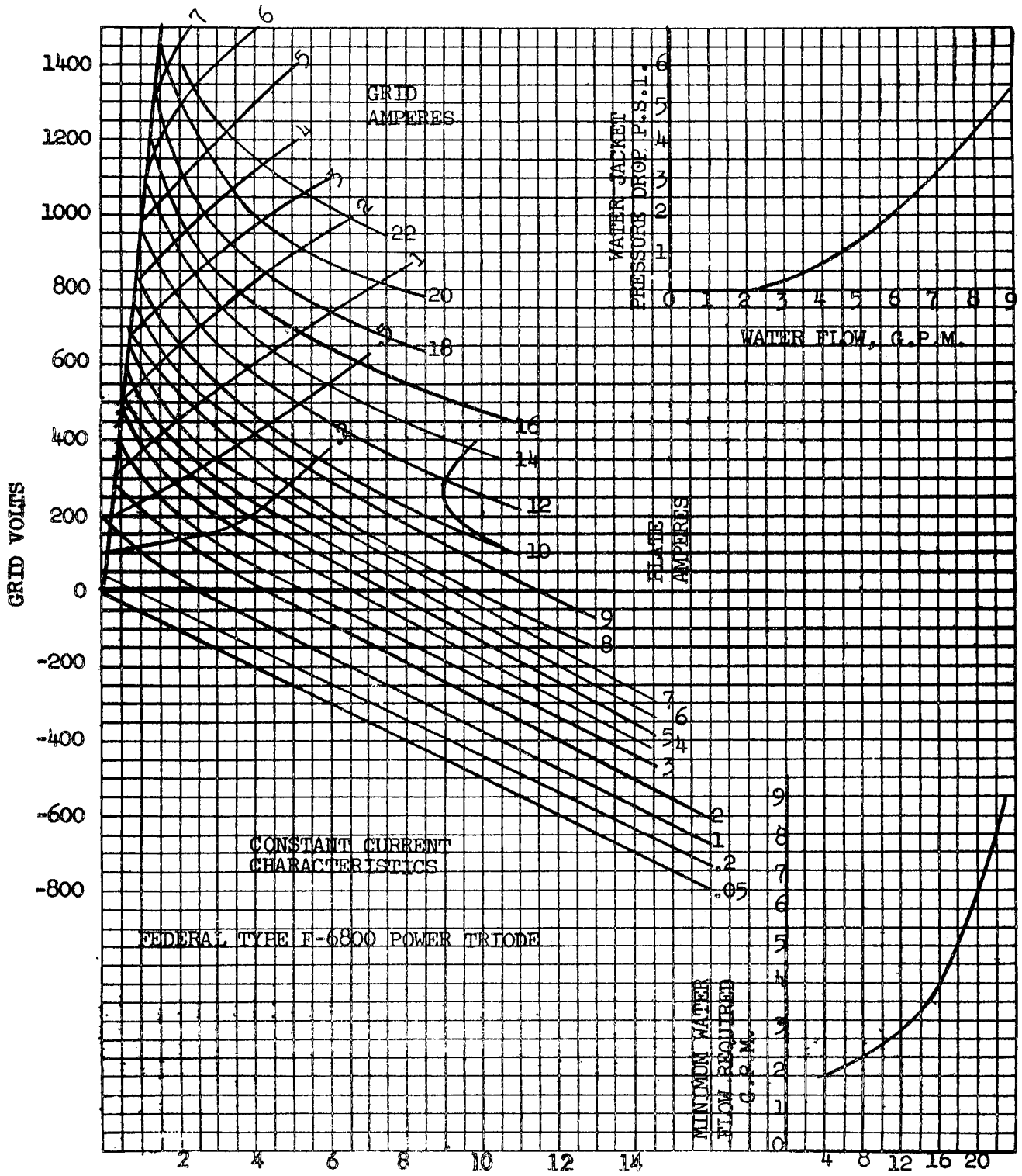

ITT COMPONENTS DIVISION
INTERNATIONAL TELEPHONE AND TELEGRAPH CORPORATION
P. O. BOX 412, CLIFTON, NEW JERSEY

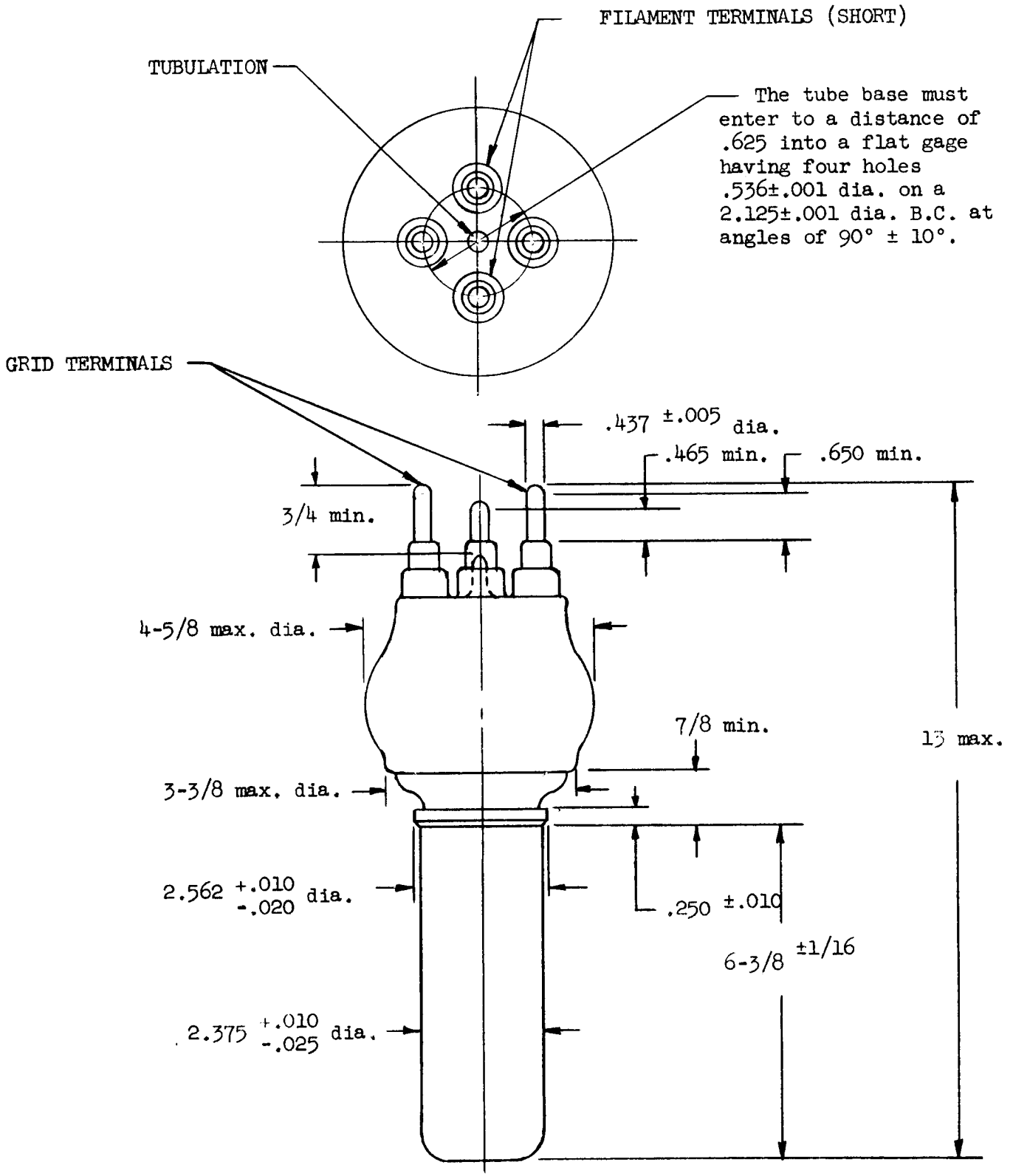

OUTLINE
F-6800 POWER TRIODE

engineering TUBE DATA

F-6801
POWER
TRIODE

ITT *Components Division*

DESCRIPTION

The F-6801 is a three electrode tube designed for use as an industrial oscillator. The anode is capable of dissipating 10 kilowatts during Continuous Commercial Service. Cooling is accomplished by forced air. The cathode is a thoriated tungsten filament of free-hung design and may be operated on d-c or single phase a-c. Maximum ratings apply up to 22.5 megacycles and operation up to 50 megacycles is permissible at reduced ratings.

ELECTRICAL

Filament Voltage	7.5 volts
Filament Current	107 amperes
Filament Starting Current	300 max. amperes
Filament Cold Resistance	.01 ohms
Filament Heating Time	15 seconds min.
Amplification Factor	
E_c = -200 v. I_b = 1.25 amps	19.5
Direct Inter-electrode Capacitances	
Grid-Plate	27 μμf
Grid-Filament	25 μμf
Plate-Filament	1.25 μμf

MECHANICAL

Mounting Position — Vertical, anode down

Air Flow

Through Radiator

The tabulation listed below indicates the required flow of incoming air, through the radiator, for the various plate dissipation values. Cooling air to be applied before the application of filament power and to continue for 3 minutes after removal of filament power.

Percentage of Maximum Rated Plate Dissipation for each Class of Service

	100% rating	80% rating	60% rating	
Air Flow	750	525	350	min. cfm
Static Pressure	2	1	.45	inches water

Radiator Temperature (measured on the core at end away from incoming air)	200	max. °C
Glass Temperature (at hottest part), Note 1	180	max. °C
Net Weight, approximate	45	pounds

ITT COMPONENTS DIVISION
INTERNATIONAL TELEPHONE AND TELEGRAPH CORPORATION
P. O. BOX 412, CLIFTON, NEW JERSEY

MAXIMUM RATINGS AND TYPICAL OPERATING CONDITIONS

Radio-Frequency Power Amplifier and Oscillator - Class C Telegraphy
(Key down conditions per tube without Amplitude Modulation) Note 2

Maximum CCS Ratings, Absolute Values

D-C Plate Voltage	15,000 max. volts
D-C Grid Voltage	-1800 max. volts
D-C Plate Current	3.5 max. amperes
D-C Grid Current	.5 max. ampere
Plate Input	40 max. kilowatts
Plate Dissipation	10 max. kilowatts

Typical Operation

D-C Plate Voltage	12,500 volts
D-C Grid Voltage	-1200 volts
Peak R-F Grid Voltage	2000 volts
D-C Plate Current	3.0 amperes
D-C Grid Current, approximate	.43 amperes
Driving Power, approximate	850 watts
Power Output, approximate	28 kilowatts

Note 1: Operation at frequencies above 15 mc may require air flow on the dish center in order to hold the temperature of the seals and dish below 180°C. This flow may be obtained by deflection of the anode cooling air, or by means of a separate blower supplying 50 cfm through a 3" diameter nozzle.

Note 2: Modulation essentially negative may be used if the positive peak of the envelope does not exceed 115 per cent of the carrier conditions.

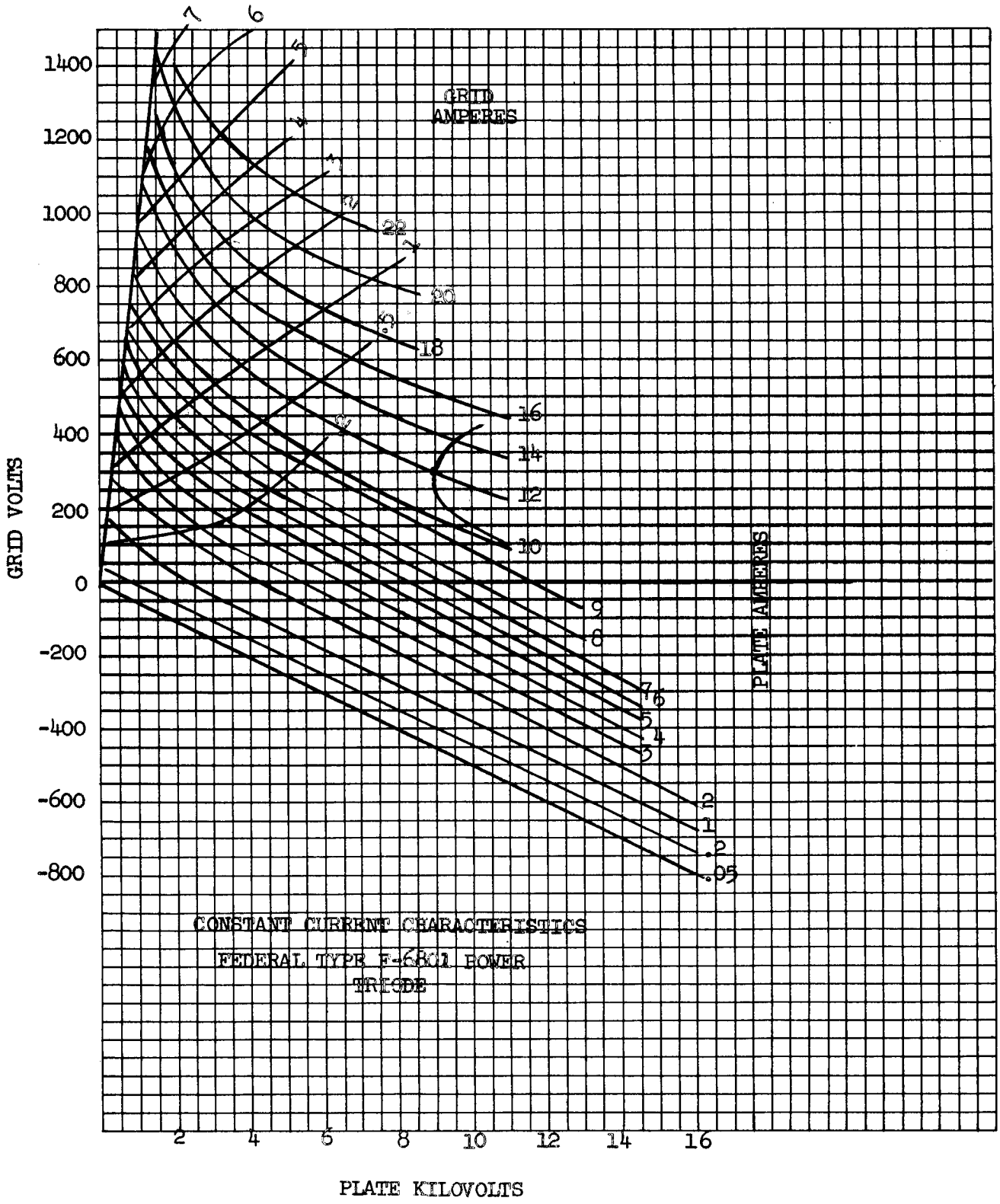

ITT COMPONENTS DIVISION
INTERNATIONAL TELEPHONE AND TELEGRAPH CORPORATION
P. O. BOX 412, CLIFTON, NEW JERSEY

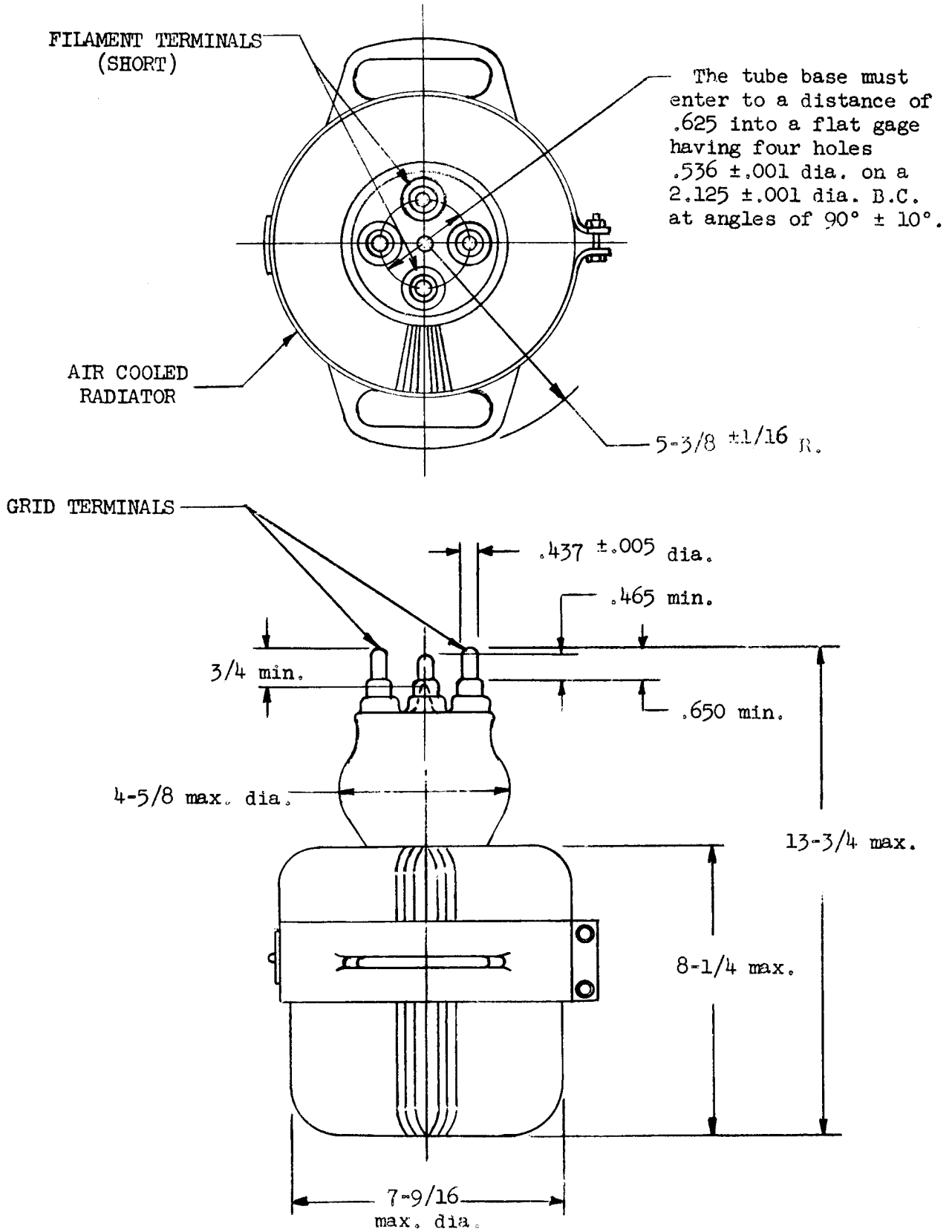

OUTLINE
F-6801 POWER TRIODE

engineering TUBE DATA

F-6803
POWER TRIODE

ITT Components Division

DESCRIPTION

The F-6803 is a three electrode tube designed for use as a radio frequency amplifier, oscillator, or Class b modulator. The anode is water cooled and is capable of dissipating 70 kilowatts during Continuous Commercial Service. The cathode is a thoriated tungsten filament of free hung design and filament excitation of 3 phase wye is required. Maximum ratings apply up to 22 megacycles.

ELECTRICAL

Filament Voltage, line to line	11.0 volts
Filament Current, per phase	190 amperes
Filament Starting Current	600 amperes
Filament Heating Time	15 seconds
Amplification Factor	
E_c = -100 v. I_b = 2.0 amperes	40
Peak Cathode Current, Note 1	100 amperes
Direct Inter-electrode Capacitances	
Grid-Plate	37 μμf
Grid-Filament	75 μμf
Plate-Filament	2.0 μμf

MECHANICAL

Mounting Position	Vertical, anode down
Type of Cooling	Water and Forced Air
Water Flow on Anode	30 gpm
Maximum Outgoing Water Temperature	70 °C
Air Flow on Bulb, Note 2	250 cfm
Glass Temperature (at hottest part)	180 °C, max.

Note 1: Represents maximum usable cathode current (plate current plus grid current) for any condition of operation.

Note 2: Operation at frequencies above 2 mc may require air flow onto the dish center in order to hold the temperature of the seals and dish below 180°C. The blower required should deliver up to 250 cfm through a 3" diameter nozzle.

ITT COMPONENTS DIVISION
INTERNATIONAL TELEPHONE AND TELEGRAPH CORPORATION
P. O. BOX 412, CLIFTON, NEW JERSEY

MECHANICAL (continued)

Net Weight, approximate	25 lbs
Accessories	
Water Jacket	RT-53402
Mounting Clamp	RT-53492
"O" Ring	RT-53836
Terminal Connector (6 required)	RT-52578
Connector Wrench (2 required)	RT-52843

MAXIMUM RATINGS AND TYPICAL OPERATING CONDITIONS

Audio-Frequency Power Amplifier and Modulator--Class B

Maximum Ratings, Absolute Values

D-C Plate Voltage	19,000 volts
Max. Signal D-C Plate Current, Note 3	9 amperes
Max. Signal Plate Input, Note 3	150 kilowatts
Plate Dissipation, Note 3	70 kilowatts

Typical Operation
(Unless otherwise specified, values are for two tubes)

D-C Plate Voltage	14,000 volts
D-C Grid Voltage	-300 volts
Peak A-F Grid-to-Grid Voltage	1,600 volts
Zero Signal D-C Plate Current	2 amperes
Max. Signal D-C Plate Current	16 amperes
Effective Load Resistance, plate-to-plate	2,250 ohms
Max. Signal Driving Power, approx.	1,500 watts
Max. Signal Power Output, approx.	150 kilowatts

Radio-Frequency Power Amplifier--Class B
(Carrier conditions per tube for use with a maximum modulation factor of 1.0)

Maximum Ratings, Absolute Values

D-C Plate Voltage, Note 4	17,500 volts
D-C Plate Current	7 amperes
Plate Input	100 kilowatts
Plate Dissipation	70 kilowatts

Note 3: Averaged over any audio frequency cycle of sine-wave form.

Note 4: The tube may be operated up to 19,000 d-c plate volts at frequencies of 2 mc or less.

Typical Operation

D-C Plate Voltage	15,000 volts
D-C Grid Voltage	-375 volts
Peak R-F Grid Voltage	500 volts
D-C Plate Current	4.9 amperes
D-C Grid Current	0.0 amperes
Driving Power, approx. Note 5	770 watts
Power Output, approx.	25 kilowatts

Plate-Modulated Radio-Frequency Power Amplifier--Class C Telephony
(Carrier conditions per tube for use with a maximum modulation factor of 1.0)

Maximum Ratings, Absolute Values

D-C Plate Voltage	14,000 volts
D-C Grid Voltage	-3,000 volts
D-C Plate Current	12 amperes
D-C Grid Current	1.5 amperes
Plate Input	140 kilowatts
Plate Dissipation	47 kilowatts

Typical Operation

D-C Plate Voltage	14,000 volts
D-C Grid Voltage	-800 volts
Peak R-F Grid Voltage	1,550 volts
D-C Plate Current	10 amperes
D-C Grid Current	1.4 amperes
Driving Power, approx.	2 kilowatts
Power Output, approx.	104 kilowatts

Radio-Frequency Power Amplifier and Oscillator--Class C Telegraphy
(Key down conditions per tube without amplitude modulation) Note 6

Maximum Ratings, Absolute Values

D-C Plate Voltage, Note 7	17,500 volts
D-C Grid Voltage	-3,000 volts
D-C Plate Current	15 amperes
D-C Grid Current	1.5 amperes
Plate Input	175 kilowatts
Plate Dissipation	70 kilowatts

Note 5: At crest of audio-frequency cycle with modulation factor of 1.0

Note 6: Modulation essentially negative may be used if the positive peak of the envelope does not exceed 115 per cent of carrier conditions.

Note 7: The tube may be operated up to 19,000 d-c plate volts at frequencies of 2 mc or less.

ITT COMPONENTS DIVISION
INTERNATIONAL TELEPHONE AND TELEGRAPH CORPORATION
P. O. BOX 412, CLIFTON, NEW JERSEY

Typical Operation

D-C Plate Voltage	14,500 volts
D-C Grid Voltage	2,250 volts
Peak R-F Grid Voltage	3,200 volts
D-C Plate Current	8.25 amperes
D-C Grid Current, approx.	1.5 amperes
Driving Power, approx.	5.0 kilowatts
Power Output, approx.	95 kilowatts

Ratings versus Frequency

Maximum ratings apply up to 22 megacycles. The tube may be operated at higher frequencies provided the maximum values of plate voltage and power input are reduced according to the tabulation below (other maximum ratings are the same as shown above). Special attention should be given to adequate ventilation of the bulb at these frequencies.

Frequency	22	30	40 megacycles
Percentage of Maximum Rated Plate Voltage & Plate Input	100	80	50 per cent

For tube characteristic curves, refer to F-5918-A catalog sheet.

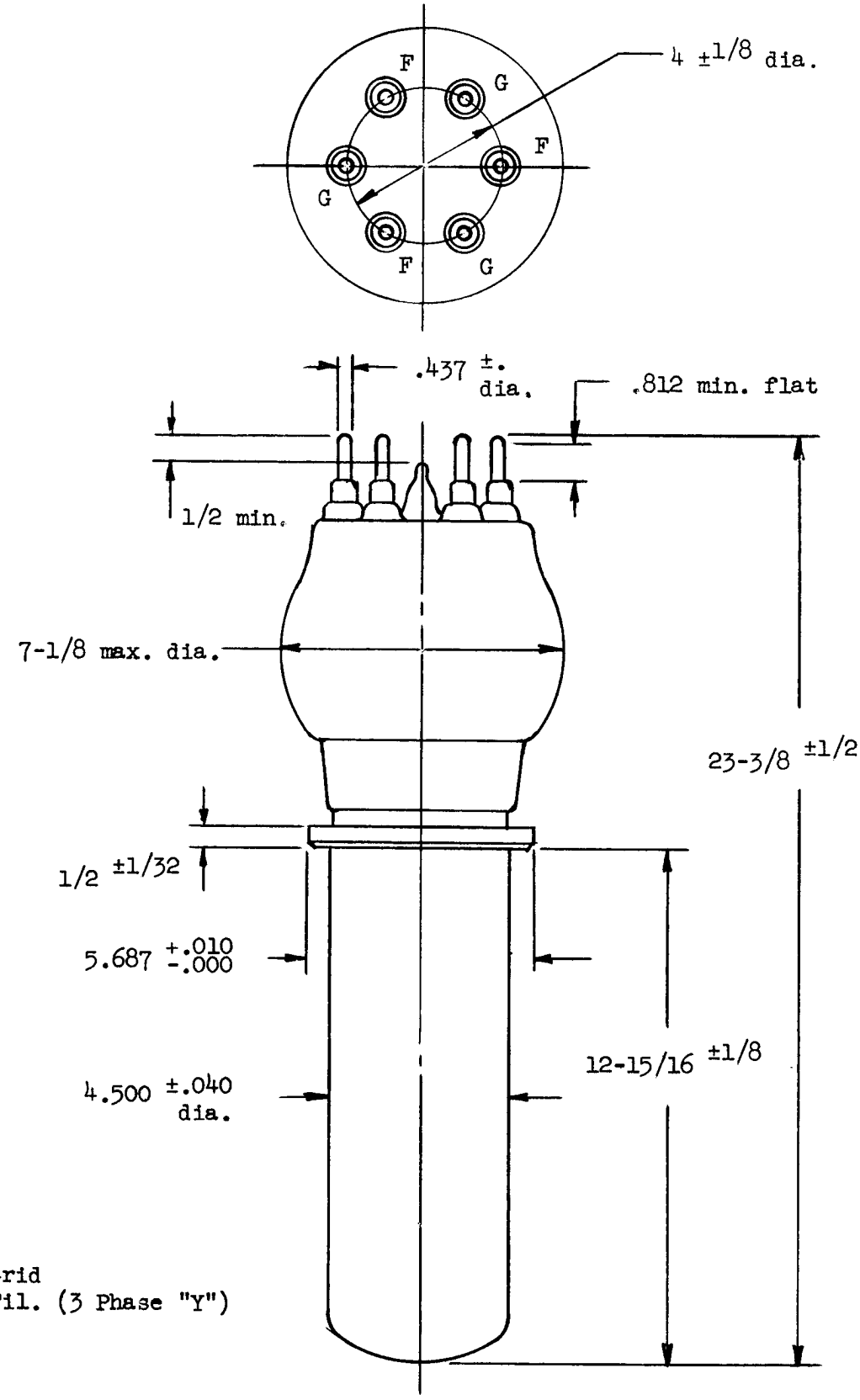

TERMINALS

Black - Grid
Yellow - Fil. (3 Phase "Y")

OUTLINE
F-6803 POWER TRIODE

ITT COMPONENTS DIVISION
INTERNATIONAL TELEPHONE AND TELEGRAPH CORPORATION
P. O. BOX 412, CLIFTON, NEW JERSEY

engineering TUBE DATA

F-6804
POWER TRIODE

ITT Components Division

DESCRIPTION

The F-6804 is a three electrode tube designed for use as a radio frequency amplifier, oscillator, or Class B modulator. The anode is forced air cooled and is capable of dissipating 25 kilowatts during Continuous Commercial Service. The cathode is a thoriated tungsten filament of free hung design and filament excitation of 3-phase wye is required. Maximum ratings apply up to 22 megacycles.

ELECTRICAL

Filament Voltage, line to line	11.0 volts
Filament Current, per phase	190 amperes
Filament Starting Current	600 amperes
Filament Heating Time	15 seconds
Amplification Factor	
E_c = -100 v. I_b = 2.0 amperes	40
Peak Cathode Current, Note 1	100 amperes
Direct Inter-electrode Capacitances	
Grid-Plate	37 μμf
Grid-Filament	75 μμf
Plate-Filament	2.2 μμf

MECHANICAL

Mounting Position — Vertical, anode down

Air Flow

Through Radiator

The tabulation listed below indicates the required flow of incoming air, through the radiator, for the various plate dissipation values. Cooling air to be applied before the application of filament power and to continue for 3 minutes after removal of filament power.

Percentage of Maximum Rated Plate Dissipation for each Class of Service	100% rating	80% rating	60 % rating	
Air Flow	1800	1450	1100	min. cfm
Static Pressure	2.2	1.5	.85	in. of water

ITT COMPONENTS DIVISION
INTERNATIONAL TELEPHONE AND TELEGRAPH CORPORATION
P. O. BOX 412, CLIFTON, NEW JERSEY

MECHANICAL (continued)

Radiator Temperature measured on the core at end away from incoming air	180 °C, max.
Glass Temperature at hottest part - Note 2	180 °C, max.
Net Weight, approx,	225 pounds
Accessories	
Terminal Connector (6 required)	RT-52578
Connector Wrench (2 required)	RT-52843

MAXIMUM RATINGS AND TYPICAL OPERATING CONDITIONS

Audio Frequency Power Amplifier and Modulator--Class B

Maximum Ratings, Absolute Values

D-C Plate Voltage	19,000 volts
Max. Signal D-C Plate Current, Note 3	9 amperes
Max. Signal Plate Input, Note 3	150 kilowatts
Plate Dissipation, Note 3	25 kilowatts

Typical Operation
(Unless otherwise specified, values are for two tubes)

D-C Plate Voltage	10,000 volts
D-C Grid Voltage	-220 volts
Peak A-F Grid-to-Grid Voltage	820 volts
Zero Signal D-C Plate Current	.6 amperes
Max. Signal D-C Plate Current	5.8 amperes
Effective Load Resistance, Plate-to-Plate	3600 ohms
Max. Signal Driving Power, approx.	820 watts
Max. Signal Power Output, approx.	37 kilowatts

Plate-Modulated Radio-Frequency Power Amplifier--Class C Telephony
(Carrier conditions per tube for use with a maximum modulation factor of 1.0)

Maximum Ratings, Absolute Values

D-C Plate Voltage	14,000 volts
D-C Grid Voltage	-3,000 volts
D-C Plate Current	12 amperes
D-C Grid Current	1.5 amperes
Plate Input	85 kilowatts
Plate Dissipation	20 kilowatts

Typical Operation

D-C Plate Voltage	10,000	14,000 volts
D-C Grid Voltage	-750	-900 volts
Peak R-F Grid Voltage	1360	1,500 volts
D-C Plate Current	6.6	5.7 amperes
D-C Grid Current	.9	.9 amperes
Driving Power, approximate	1.2	1.3 kilowatts
Power Output, approximate	50	50 kilowatts

Radio-Frequency Power Amplifier and Oscillator--Class C Telegraphy
(Key down conditions per tube without amplitude modulation) Note 4

Maximum Ratings, Absolute Values

D-C Plate Voltage, Note 5	17,500 volts
D-C Grid Voltage	-3,000 volts
D-C Plate Current	15 amperes
D-C Grid Current	1.5 amperes
Plate Input	125 kilowatts
Plate Dissipation	25 kilowatts

Typical Operation

D-C Plate Voltage	10,000 volts
D-C Grid Voltage	-1,000 volts
Peak R-F Grid Voltage	1,675 volts
D-C Plate Current	6.4 amperes
D-C Grid Current, approximate	1.1 amperes
Driving Power, approximate	1.7 kilowatts
Power Output, approximate	50 kilowatts

Ratings versus Frequency

Maximum ratings apply up to 22 megacycles. The tube may be operated at higher frequencies provided the maximum values of plate voltage and power input are reduced according to the tabulation below (other maximum ratings are the same as shown above). Special attention should be given to adequate ventilation of the bulb at these frequencies.

Frequency	22	30	40 megacycles
Percentage of Maximum Rated Plate Voltage & Plate Input	100	80	50 per cent

For tube characteristic curves, refer to F-5918A catalog sheet.

ITT COMPONENTS DIVISION
INTERNATIONAL TELEPHONE AND TELEGRAPH CORPORATION
P. O. BOX 412, CLIFTON, NEW JERSEY

Note 1: Represents maximum usable cathode current (plate current plus grid current) for any condition of operation.

Note 2: Operation at frequencies above 2 mc may require air flow onto the dish center in order to hold the temperature of the seals and dish below 180°C. This flow may be obtained by deflection of the anode cooling air or by means of a separate blower.

Note 3: Averaged over any audio frequency cycle of sine-wave form.

Note 4: Modulation essentially negative may be used if the positive peak of the envelope does not exceed 115 per cent of carrier conditions.

Note 5: The tube may be operated up to 19,000 d-c plate voltage at frequencies of 2 mc or less.

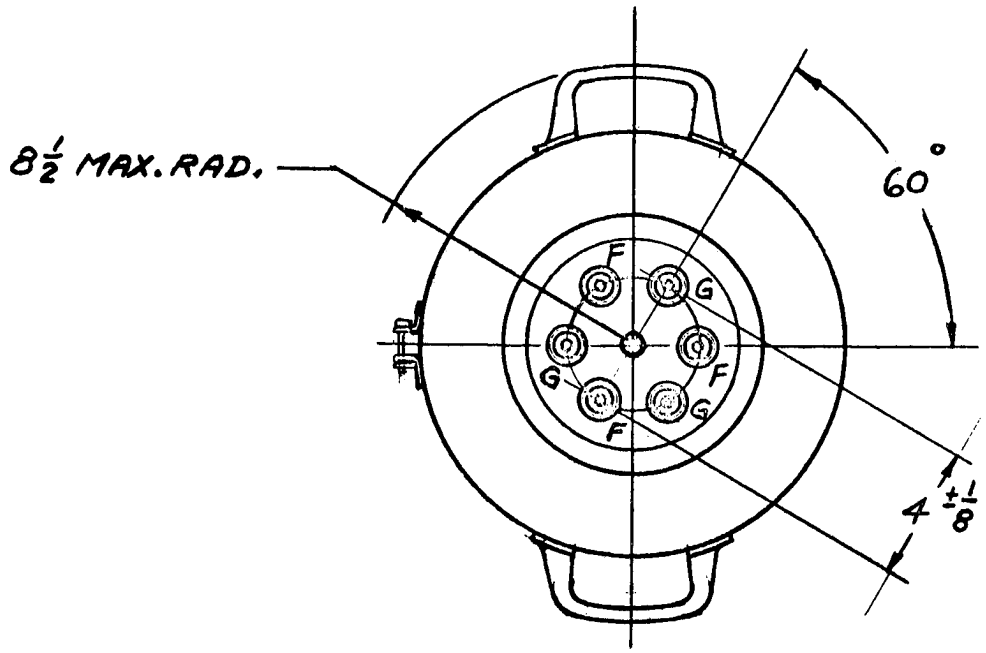

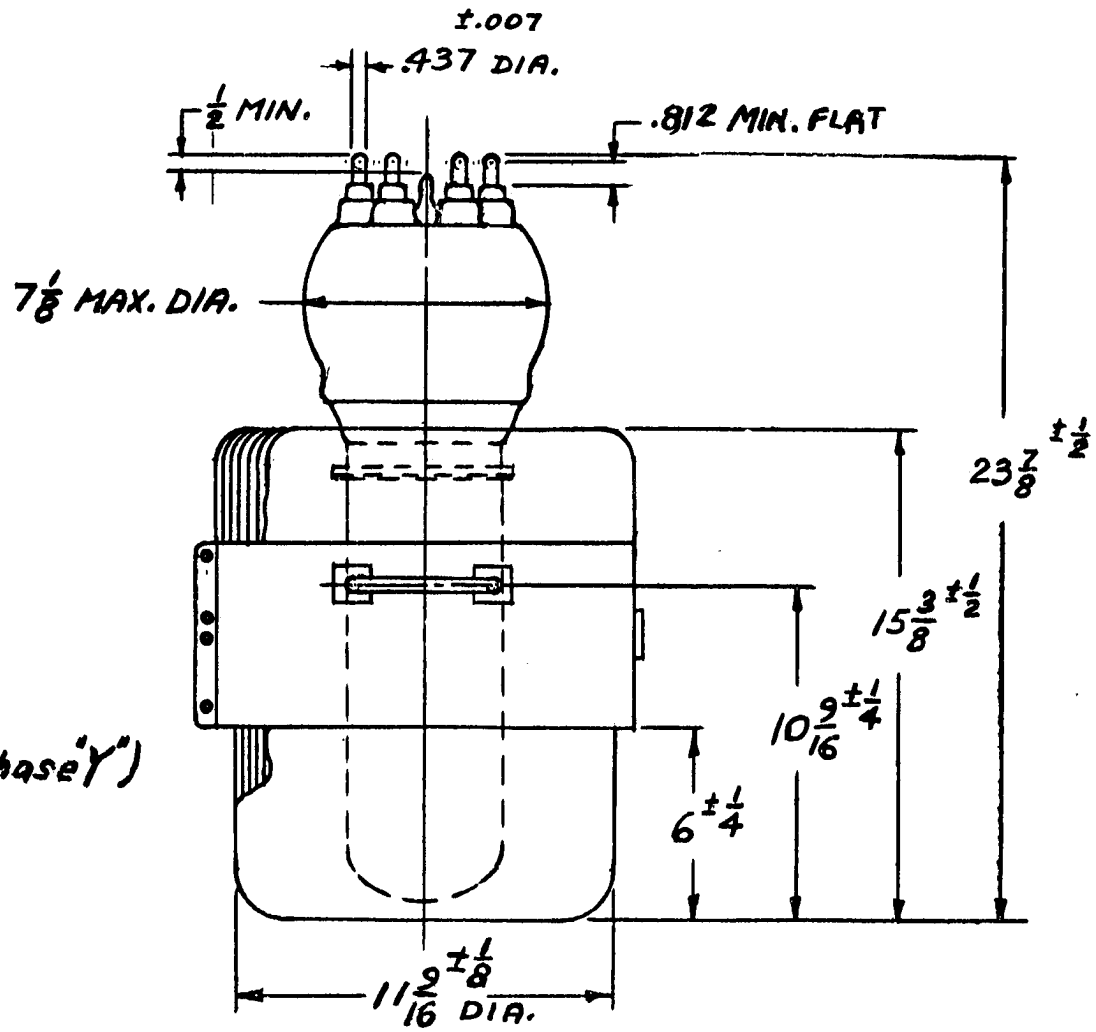

TERMINALS
BLACK GRID
YELLOW FIL. (3 phase "Y")

FEDERAL TYPE-F-6804

ITT COMPONENTS DIVISION
INTERNATIONAL TELEPHONE AND TELEGRAPH CORPORATION
P. O. BOX 412, CLIFTON, NEW JERSEY

TENTATIVE

DESCRIPTION:

The F-6825 is a 1 kilowatt pulse traveling wave amplifier tube having 30 db gain and 2000 to 4000 mc frequency range. It is constructed in a rugged metal envelope with a helix-type slow wave structure. The integral matching circuit is in 50 ohm coaxial line and is provided with type "N" connectors. The tube is self aligning in the external solenoid which is required to provide a uniform magnetic field. A convergent beam gun and oxide impregnated cathode are used. Duty cycles up to .005 and pulse widths up to 15 microseconds can be used.

ELECTRICAL RATINGS, ABSOLUTE VALUES:

Heater Voltage	6.3 (±10%)	volts
Heater Current	5.0	amperes
Maximum Anode Voltage (Note 1)	8500	volts peak
Maximum Shell Current (Note 2)	0.5	ampere peak
Maximum Collector Voltage (Note 3)	9000	volts peak
Maximum Collector Dissipation (Note 4)	150	watts average
Maximum R-F Input Power	10	watts average
Maximum R-F Output Power	20	watts average
Maximum Duty Cycle	.005	
Maximum Pulse Width (Beam)	15	microseconds
Maximum Cathode Current	2.5	amperes peak

ELECTRICAL INFORMATION:

Maximum Frequency (Note 5)	4000	mc
Minimum Frequency (Note 5)	2000	mc
Minimum Cold Transmission Loss	60	db
Capacitance		
All Gun Elements to Shell	4.2	μμfd

MECHANICAL INFORMATION:

Type of Cathode	Oxide Impregnated Unipotential
Base, Small Shell Duodecal, 5 Pin	JEDEC Designation B5-57
Type of Envelope	Metal
Magnetic Field Strength	1200 gauss
Length of Magnetic Field	9.625 inches uniform
Mounting Position	Any
Weight (not including Magnet)	1 pound, 14 ounces
R-F Connections	50 ohm coax with Type N Jack UG-23B/U
Type of Cooling	Forced Air
Air Flow on Collector Radiator (Note 4)	30 cfm
Glass Temperature	160° C max.

TYPICAL OPERATION AS POWER AMPLIFIER:

Center Frequency	3000 mc
Anode Voltage (Note 1)	8000 volts peak
Cathode Current	1.8 amperes peak
Collector Voltage (tied to Shell)	8000 volts peak
Collector Current	1.5 amperes peak
Power Output (at center frequency)	2 kw peak
Bandwidth to 3 db power points	2.0-4.0 kmc
Gain (Note 6)	30 db
Duty	.001
Pulse Width	2 μ seconds

Note 1: All voltages shown are with respect to cathode. Anode and helix are connected internally to the shell. The shell is normally operated at ground potential and the anode connection is made to the shell of the solenoid.

Note 2: The shell current is the difference between cathode current and collector current. Since this current in general should be minimized, it may be desirable to measure current from shell to ground. In making this measurement, care should be taken that both the tube and solenoid are completely insulated from ground. Once operating characteristics (voltage, current, and magnetic field) have been established, shell should be grounded.

Note 3: The tube may be operated with the collector tied to the shell (anode and helix) or may be operated at several hundred volts positive with respect to shell with slight improvement in beam transmission. The potential difference between collector and shell must be limited to 500 volts maximum.

Note 4: Forced air cooling is required for average collector power in excess of 10 watts. As the collector power is increased, the air flow required increases. At the maximum collector power of 150 watts, a minimum air flow of 20 cfm through the cooling fins is required.

Note 5: Useful gain and power output exists below 2000 mc and above 4000 mc and can be utilized by adjusting anode voltage to optimize the frequency range desired. However, bandwidth cannot be extended both upward and downward simultaneously and maximum gain and power output outside the normal bandwidth will usually be lower than rated values.

Note 6: This gain is obtained over the 2.0 to 4.0 kmc bandwidth at the power level indicated. Since this is in the power saturation region, small signal gain will be approximately 10 db higher.

OPERATING INSTRUCTIONS:

(1) Heater warm up of 2 minutes before applying high voltage is recommended.

(2) Initial adjustments should be done at low duty cycle (less than .001) to prevent tube damage due to high shell (interception) current.

Standard solenoids to operate this tube are available, and solenoids designed for particular application can be supplied.

Additional information for specific applications can be obtained from the

Electron Tube Applications Section
ITT Components Division
Box 7065
ROANOKE, VIRGINIA

TYPICAL P_{out} VS. FREQUENCY CHARACTERISTICS

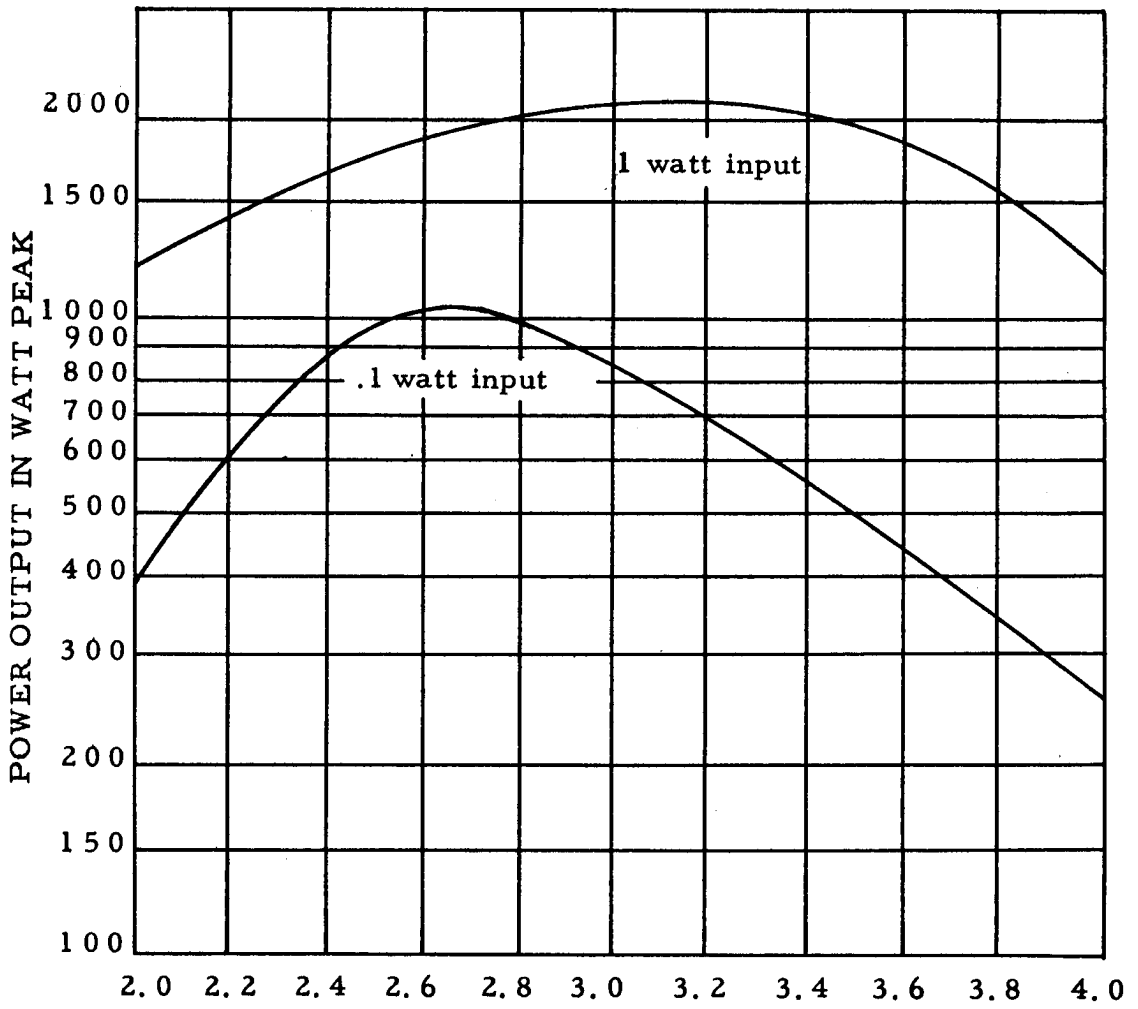

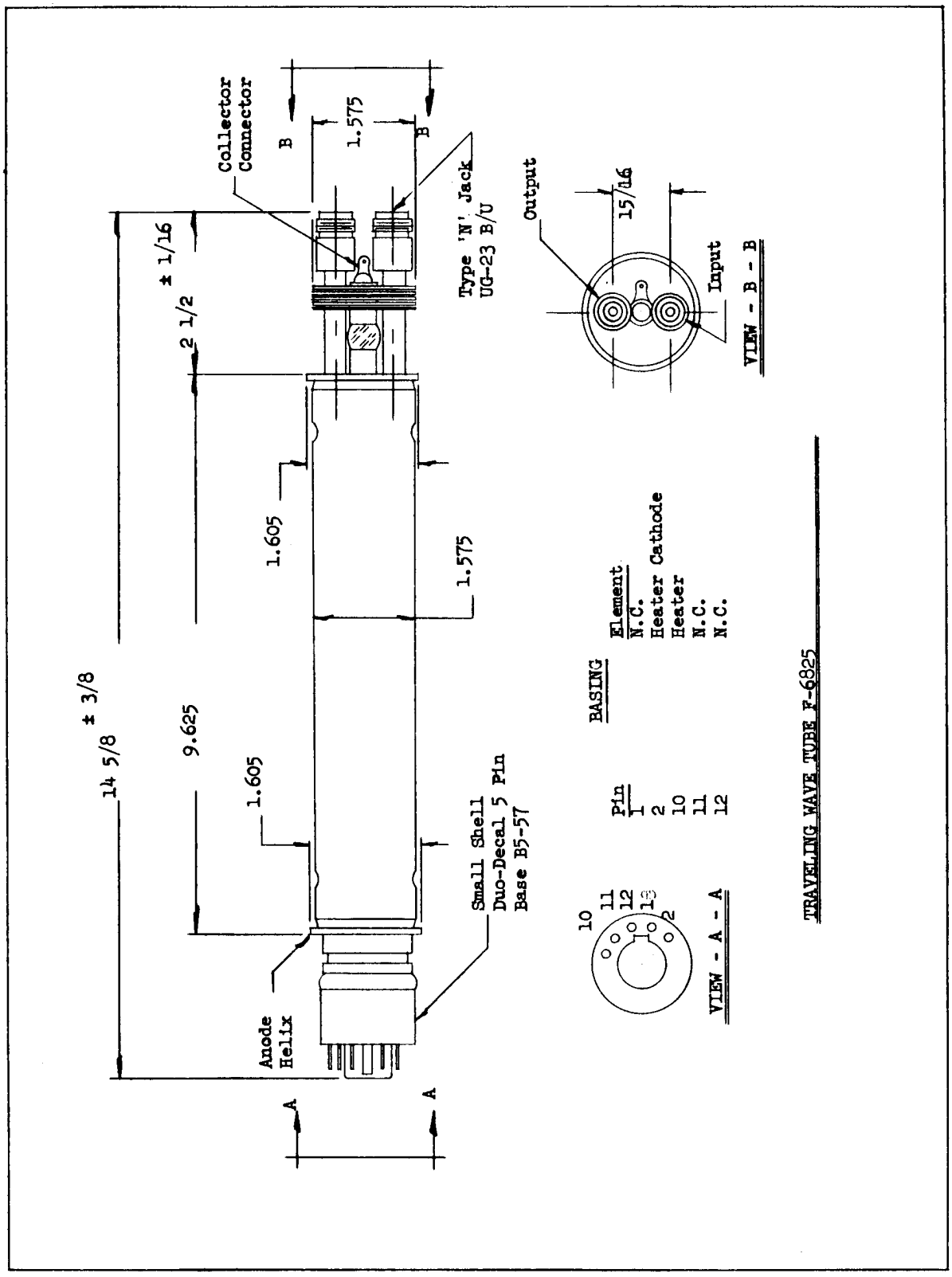
Collector Connector
B
1.575
B
Type 'N' Jack UG-23 B/U
± 1/16
2 1/2
1.605
1.575
14 5/8 ± 3/8
9.625
1.605
Anode Helix
Small Shell Duo-Decal 5 Pin Base B5-57
A
A
Output
15/16
Input
VIEW - B - B
BASING
Pin
Element
1 N.C.
2 Heater Cathode
10 Heater
11 N.C.
12 N.C.
10
11
12
13
2
VIEW - A - A
TRAVELING WAVE TUBE F-6825

TENTATIVE

DESCRIPTION:

The F-6826 is a 1 kilowatt pulse traveling wave amplifier tube having 30 db gain and 2000 to 4000 mc frequency range. It is constructed in a rugged metal envelope with a helix-type slow wave structure. The integral matching circuit is in 50 ohm coaxial line and is provided with type "N" connectors. The tube is self aligning in the external solenoid which is required to provide a uniform magnetic field. A convergent beam gun and oxide impregnated cathode are used. Duty cycles up to .005 and pulse lengths up to 10 microseconds can be used.

A control grid suitable for grid pulsing is provided.

ELECTRICAL RATINGS, ABSOLUTE VALUES:

Heater Voltage	6.3 (±10%)	volts
Heater Current	5.0	amperes
Maximum Anode Voltage (Note 1)	8500	volts
Maximum Shell Current (Note 2)	0.5	ampere peak
Maximum Collector Voltage (Note 3)	9000	volts
Maximum Collector Dissipation (Note 4)	100	watts avg.
Maximum R-F Input Power	10	watts avg.
Maximum R-F Output Power	10	watts avg.
Maximum Duty Cycle	.005	
Maximum Pulse Width (beam)	10	μ seconds
Maximum Cathode Current	2.5	amperes peak
Maximum Grid Voltage		
Negative	-300	volts
Positive (Note 7)	+6% of anode voltage	

ELECTRICAL INFORMATION:

Maximum Frequency (Note 5)	4000	mc
Minimum Frequency (Note 5)	2000	mc
Minimum Cold Transmission Loss	60	db
Capacitance		
Control Grid to all other Elements	9	μμfd

MECHANICAL INFORMATION:

Type of Cathode	Oxide Impregnated Unipotential
Base, Small Shell Duodecal, 6 Pin	JEDEC Designation B6-63
Type of Envelope	Metal
Magnetic Field Strength	1200 Gauss
Length of Magnetic Field	9.625 Inches Uniform
Mounting Position	Any
Weight (not including magnet)	1 lb. 14 ozs.
R-F Connections	50 ohm coax with Type "N" Jack UG-23B/U
Type of Cooling	Forced Air
Air Flow on Collector Radiator (Note 4)	20 cfm
Glass Temperature	160°C max.

TYPICAL OPERATION AS POWER AMPLIFIER:

Center Frequency	3000 mc
Anode Voltage (Note 1)	7500 volts
Cathode Current	1.8 amperes peak
Collector Voltage (tied to Shell)	7500 volts
Collector Current	1.4 amperes peak
Power Output (at center frequency)	1.5 kw peak
Bandwidth to 3 db power points	2.0-4.0 kmc
Gain (Note 6)	30 db
Duty	.001
Pulse Width	2 μ seconds
Grid Bias (for cut-off)	-100 volts
Grid Voltage during Pulse (Note 8)	+350 volts
Grid Current during Pulse	0.1 ampere peak

Note 1: All voltages shown are with respect to cathode. Anode and helix are connected internally to the shell. The shell is normally operated at ground potential and the anode connection is made to the shell of the solenoid.

Note 2: The shell current is the difference between cathode current and collector current. Since this current, in general, should be minimized, it may be desirable to measure current from shell to ground. In making this measurement, care should be taken that both the tube and solenoid are completely insulated from ground. Once operating characteristics (voltage, current, and magnetic field) have been established, shell should be grounded.

Note 3: The tube may be operated with the collector tied to the shell (anode and helix) or may be operated at several hundred volts positive with respect to shell with slight improvement in beam transmission. The potential difference between collector and shell must be limited to 500 volts maximum.

Note 4: Forced air cooling is required for average collector power in excess of 10 watts. As the collector power is increased, the air flow required increases. At the maximum collector power of 100 watts, a minimum air flow of 20 cfm through the cooling fins is required.

Note 5: Useful gain and power output exists below 2000 mc and above 4000 mc and can be utilized by adjusting anode voltage to optimize the frequency range desired. However, bandwidth cannot be extended both upward and downward simultaneously and maximum gain and power output outside the normal bandwidth will be lower than rated values.

Note 6: This gain is obtained over the 2.0 to 4.0 kmc bandwidth at the power level indicated. Since this is in the power saturation region, small signal gain will be approximately 10 db higher.

Note 7: Positive voltage must not be applied to the grid in the absence of anode voltage.

Note 8: The positive grid voltage pulse should be the minimum consistent with normal power output.

GENERAL OPERATING INSTRUCTIONS:

(1) Heater warm up of 2 minutes before applying high voltage is recommended.

(2) High voltage must not be applied in the absence of proper grid bias and magnetic field. Positive grid pulse voltage must not be applied in the absence of high voltage.

(3) Initial adjustments should be done at low duty cycle (less than .001) to prevent tube damage due to high shell (interception) current.

Standard solenoids to operate this tube are available, and solenoids designed for particular applications can be supplied.

Additional information for specific applications can be obtained from the

Electron Tube Applications Section
ITT Components Division
Box 412 - Clifton, New Jersey

TYPICAL P_{out} VS. FREQUENCY CHARACTERISTIC

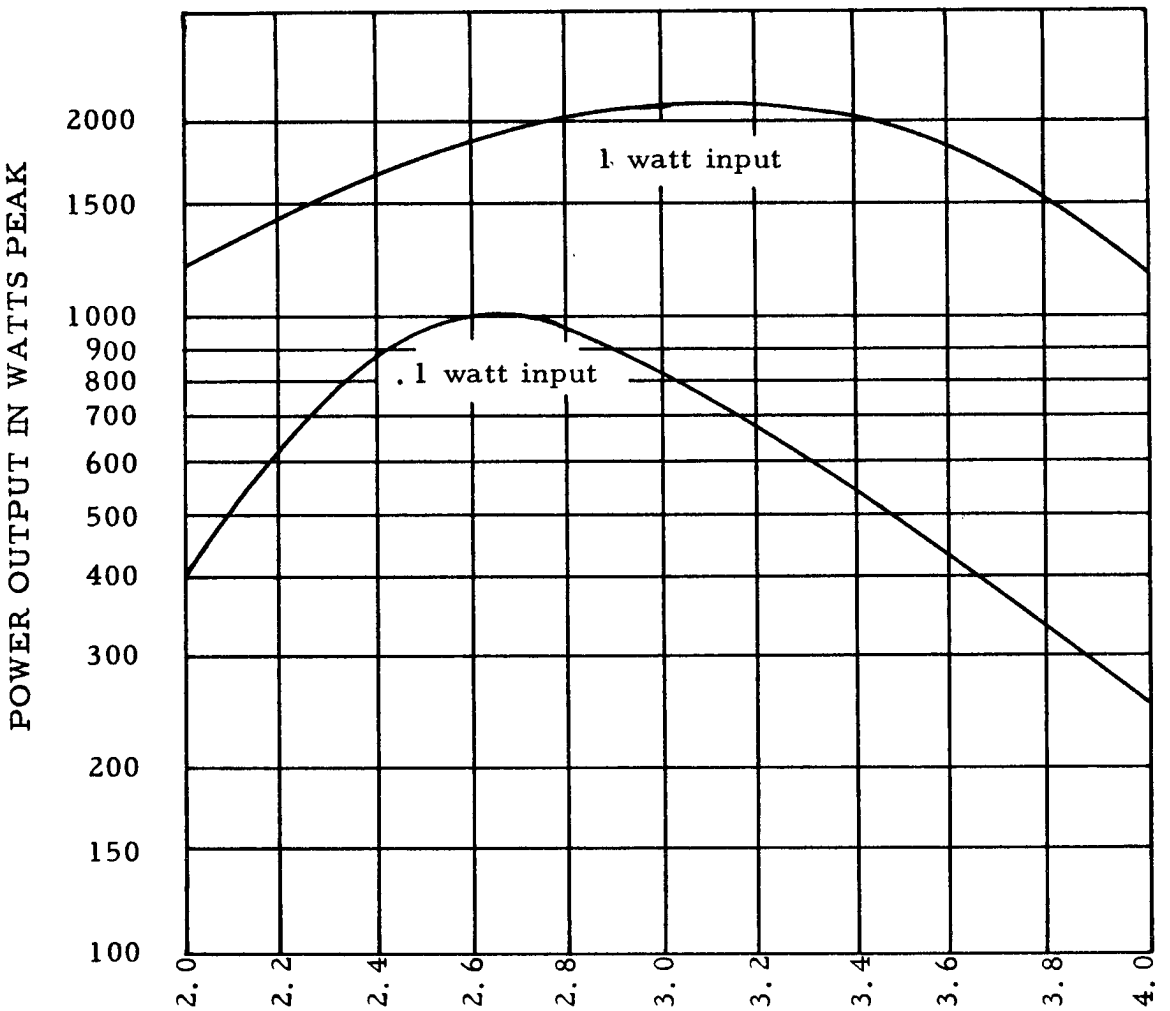

TYPICAL POWER IN - POWER OUT CHARACTERISTIC

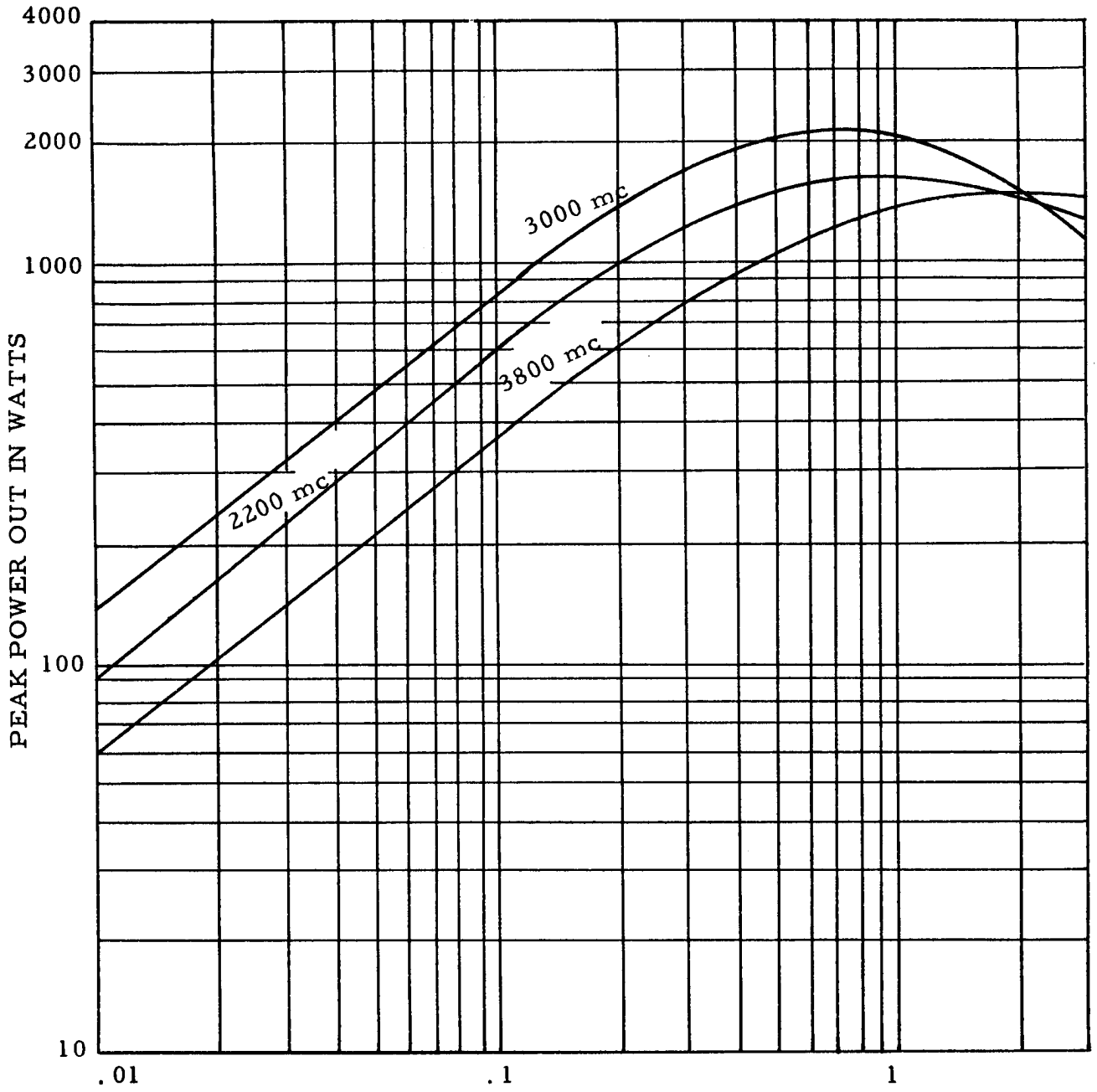

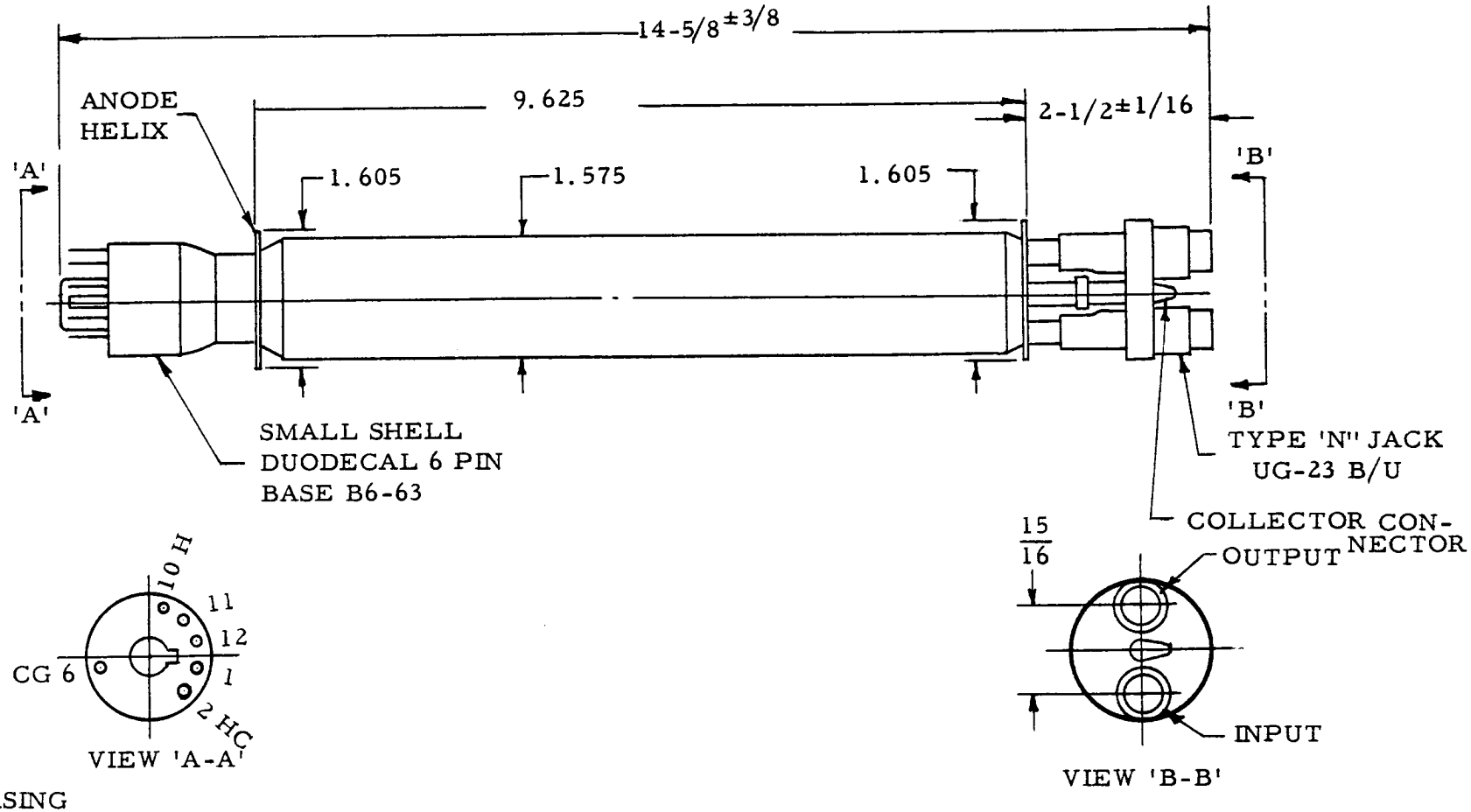

BASING

PIN	ELEMENT
1	NO CONN.
2	HEATER CATHODE
6	CONTROL GRID
10	HEATER
11	NO CONN.
12	NO CONN.

TRAVELING WAVE TUBE TYPE F-6826

TENTATIVE

DESCRIPTION:

The F-6867 is a 100 milliwatt CW traveling wave amplifier tube having 30 db gain and 8000 to 9600 mc frequency range. It is constructed in a rugged metal envelope with a helix-type slow wave structure. The integral matching circuit is in 50 ohm coaxial line and is normally provided with type "N" connectors. The tube is self-aligning in the external solenoid which is required to provide a uniform magnetic field. A control electrode suitable for use as a gain control is provided. The tube is suitable for either CW or pulse service.

ELECTRICAL RATINGS, ABSOLUTE VALUES:

Heater Voltage	6.3 (±10%)	volts
Heater current	0.85	amperes
Maximum Anode Voltage (Note 1)	1500	volts
Maximum Shell Current (Note 2 and Note 6)	3	ma
Maximum Collector Voltage (Note 3)	1600	volts
Maximum Collector Dissipation (Note 4)	25	watts
Maximum Control Electrode Voltage (Note 5)	-250	volts

ELECTRICAL INFORMATION

Maximum Frequency	9600	mc
Minimum Frequency	8000	mc
Minimum Cold Transmission Loss	50	db
Capacitance		
Control Electrode to All Other Elements	7	μμfd
All Gun Elements to Shell	4.5	μμfd

MECHANICAL INFORMATION:

Type of Cathode	Oxide Coated Unipotential	
Base, Small Shell Duodecal, 5 Pin	JEDEC Designation B5-57	
Type of Envelope		Metal
Magnetic Field Strength	1300	Gauss
Length of Magnetic Field	5.25	inches uniform
Mounting Position		Any
Weight (not including Magnet)		1 lb. 4 ozs.
R-F Connections		50 ohm coax with Type "N" Jack UG-23B/U
Type of Cooling		Forced Air
Maximum Glass Temperature	160°C	
Cooling Air Required (See Note 4)	5	cfm

TYPICAL OPERATION AS INTERMEDIATE POWER AMPLIFIER:

Anode Voltage	1400	volts
Shell Current	2	ma
Collector Voltage	1500	volts
Collector Current	8	ma
Control Electrode Voltage (Note 5)	-15	volts
Power Output	100	milliwatts
Bandwidth	8.0 to 9.6	kmc
Gain over Bandwidth (Small Signal)	30	db min.
Gain over Bandwidth (Power)	25	db min.
Duty Cycle		
R-F	Variable to 1.0	
Beam	1.0	

Note 1: All voltages shown are with respect to cathode. Anode and helix are connected internally to the shell. The shell is normally operated at ground potential and the d-c connection is made to the shell of the solenoid.

Note 2: The shell current is the difference between the cathode current and collector current. Since this current in general should be minimized, it may be desirable to measure the current from shell to ground. It is desirable that overload protection be provided so that if shell current exceeds 3 ma, high voltage is removed.

Note 3: It is generally desirable to operate the collector at 100 volts positive with respect to shell, and potential difference between collector and shell should be limited to 300 volts maximum.

Note 4: Forced air cooling of collector is required for average collector power in excess of 10 watts. As the collector power is increased, the air flow required increases. At the maximum collector power of 25 watts, a minimum air flow of 5 cfm through the cooling fins is required.

Note 5: The control electrode voltage is adjusted for maximum beam transmission (collector current/cathode current). It may further be used as a gain control or for introducing modulation, but cannot be operated less negative than the value required for proper transmission.

Note 6: In some cases, it may be necessary to rotate the tube in the solenoid to the point giving best transmission.

OPERATION PROCEDURE:

(1) Insert tube in solenoid, secure in place with stops provided, make connections.

(2) Turn on cooling air, solenoid voltage (adjust to approximately 1300 gauss), heater voltage, collector voltage (if used), control electrode voltage approximately -20 volts).

(3) Raise high voltage to desired value, adjusting solenoid voltage and control electrode voltage for maximum collector current, and observing care not to exceed 3 ma shell current. It may be necessary to rotate the tube in the solenoid to the point giving best transmission.

(4) The above procedure is not required after initial set up; however, heater voltage should be applied two minutes before applying high voltage, and proper magnetic field and control electrode voltage must be applied before applying high voltage. Observance of the 3 ma maximum limit on shell current is essential to prevent tube damage.

This tube has been designed primarily for operation in the 8000 to 9600 mc frequency range. Useful power and gain exist over a larger frequency range. Additional information for specific applications can be obtained from the Vacuum Tube Engineering Department.

Standard solenoids for this tube type are available and solenoids designed for specific applications can be supplied.

Additional information for specific applications can be obtained from the

Electron Tube Applications Section
ITT Components Division
Box 7065
ROANOKE, VIRGINIA

TYPICAL CHARACTERISTICS

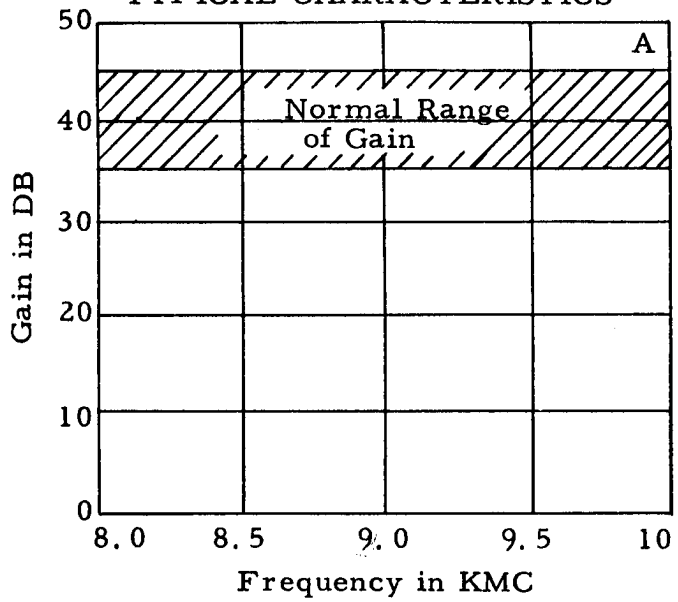

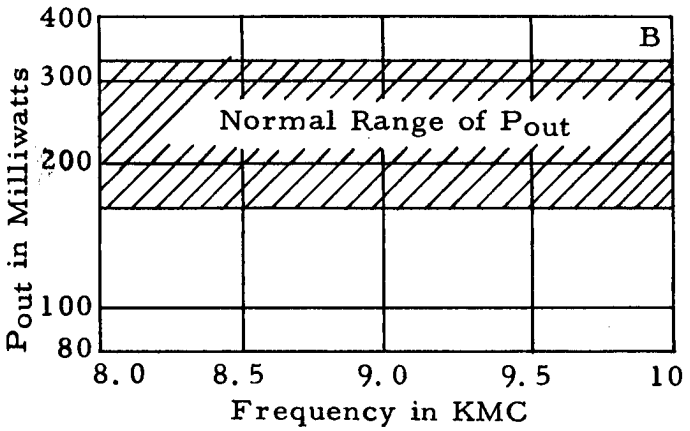

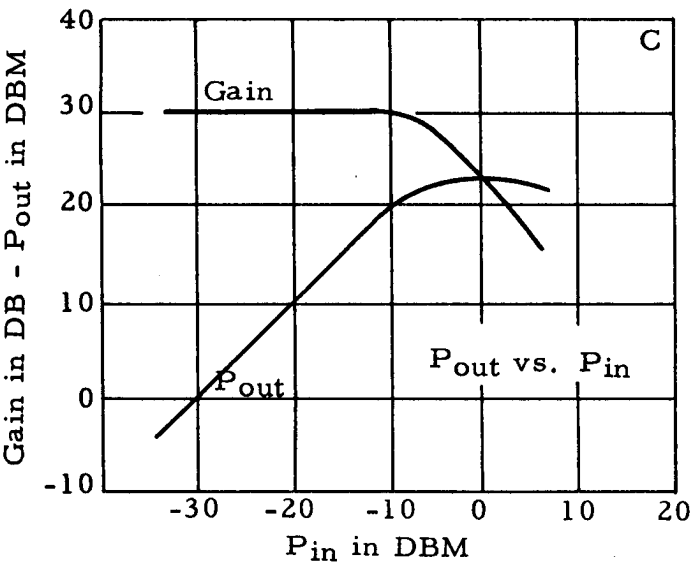

All data shown with magnetic field adjusted for best transmission in range of 900 to 1300 gauss and control electrode voltage adjusted for maximum collector current with shell current less than 3 ma.

For curve A, voltage is adjusted for maximum gain at f = 9.0 kmc and P_{in} <-10 dbm (approx. 1250 volts).

For curves B and C, voltage is adjusted for maximum P_{out} at f = 9.0 kmc and P_{in} = 0.5 mw (approx. 1400 volts).

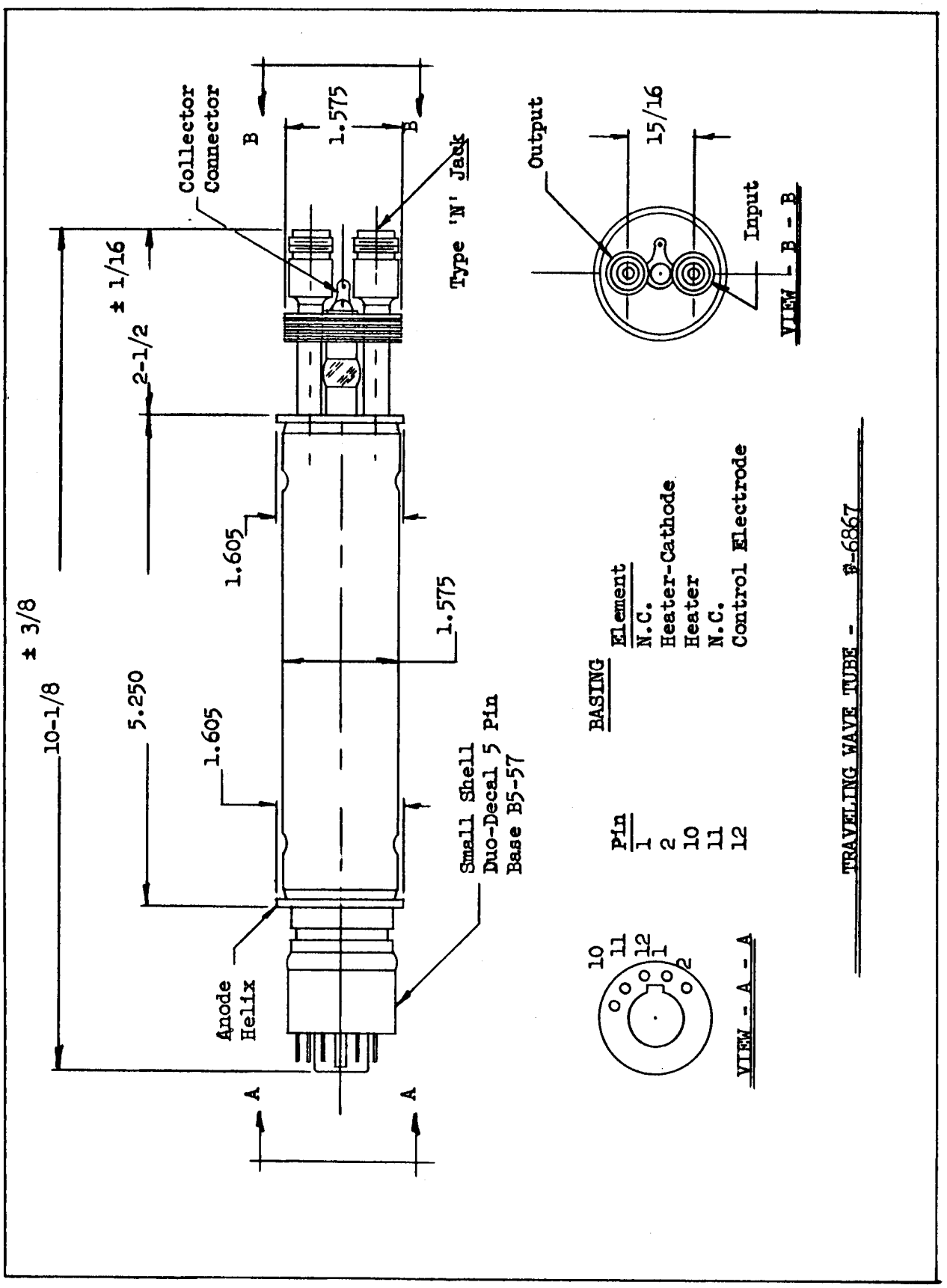
Collector Connector
B
1.575
B
Type 'N' Jack
± 1/16
2-1/2
10-1/8
± 3/8
5.250
1.605
1.605
1.575
Small Shell
Duo-Decal 5 Pin
Base B5-57
Anode Helix
A
A
Output
15/16
Input
VIEW - B - B
BASING
Pin
Element
1
N.C.
2
Heater-Cathode
10
Heater
11
N.C.
12
Control Electrode
10
11
12
1
2
VIEW - A - A
TRAVELING WAVE TUBE - #-6867

TENTATIVE

DESCRIPTION:

The F-6868 is a 10 watt CW traveling wave amplifier tube having 30 db gain and 1700 to 4000 mc frequency range. It is constructed in a rugged metal envelope with a helix-type slow wave structure. The integral matching circuit is in 50 ohm coaxial line and is provided with type "N" connectors. The tube is self-aligning in the external solenoid which is required to provide a uniform magnetic field. A convergent beam gun and oxide impregnated cathode are used. A control electrode suitable for use as a gain control is provided. The tube is suitable for either CW or pulse service uitlizing the full bandwidth or portions of it. It is also suitable for frequency shifting, such as serrodyne operation.

ELECTRICAL RATINGS, ABSOLUTE VALUES:

Heater Voltage	6.3 (±10%)	volts
Heater Current	2.5	amperes
Maximum Anode Voltage (Note 1)	1500	volts
Maximum Shell Current (Note 2)	5	ma
Maximum Collector Voltage (Note 3)	1750	volts
Maximum Collector Dissipation (Note 4)	150	watts
Maximum Control Electrode Voltage (Note 5)	-250	watts

ELECTRICAL INFORMATION:

Maximum Frequency	4000	mc
Minimum Frequency	1700	mc
Minimum Cold Transmission Loss	50	db
Capacitance		
Control Electrode to all other elements	12	μμfd
All Gun elements to Shell	4.5	μμfd

MECHANICAL INFORMATION:

Type of Cathode	Oxide Impregnated Unipotential
Base, Small Shell Duodecal, 5 Pin	JEDEC Designation B5-57
Type of Envelope	Metal
Magnetic Field Strength (nominal)	1000 gauss
Length of Magnetic Field	6.75 inches uniform
Mounting Position	Any
Weight (not including magnet)	1 lb. 7 ozs.
R-F Connections	50 ohm coax with Type "N" Jack UG-23B/U
Type of Cooling	Forced Air
Glass Temperature	160°C max.
Cooling Air Required (Note 4)	30 cfm

TYPICAL OPERATION AS POWER AMPLIFIER:

Anode Voltage	1200 volts
Shell Current	3 ma
Collector Voltage	1400 volts
Collector Current	70 ma
Control Electrode Voltage	0 volts
Power Output (see Curves)	10 watts nominal
Gain (see Curves)	30 db nominal
Duty Cycle	
R-F	Variable to 1.0
Beam	1.0

TYPICAL OPERATION AS LINEAR AMPLIFIER:
(Input powers less than -10 dbm)

Anode Voltage	1150 volts
Shell Current	2.5 ma
Collector Voltage	1400 volts
Collector Current	67 ma
Control Electrode Voltage	0 volts
Gain (see Curves)	35 db nominal
Noise Figure	30 db
Duty Cycle	
R-F	Variable to 1.0
Beam	1.0

Note 1: All voltages shown are with respect to cathode. Anode and helix are connected internally to the shell. The shell is normally operated at approximate ground potential and the d-c connection is made to the shell of the solenoid.

Note 2: The shell current is the difference between the cathode current and collector current. Since this current, in general, should be minimized, it is desirable to measure the current from shell to ground. It is recommended that overload protection be provided to remove high voltage if the shell current exceeds 5 ma.

Note 3: It is generally desirable to operate the collector at 100 to 200 volts positive with respect to shell, and potential difference between collector and shell should be limited to 300 volts maximum.

Note 4: Forced air cooling of collector is required for average collector power in excess of 10 watts. As the collector power is increased, the air flow required increases. At the maximum collector power of 150 watts, a minimum air flow of 30 cfm through the cooling fins is required.

Note 5: This electrode is a remote cutoff grid, suitable for use as a gain control providing approximately 30 db control range but is not suitable for low level pulsing of the beam. It is recommended that, where feasible, provision should be made to operate the tube with small negative voltage on this electrode (-5 to -10 volts) as this permits operation of the tube at approximately optimum conditions with very low interception (shell current). It may also be operated fixed at cathode potential, if desired.

OPERATING PROCEDURE:

(1) Insert tube in solenoid, secure in place with stops provided, make connections.

(2) Turn on cooling air, solenoid voltage (adjust to approximately 1000 gauss), heater voltage, collector voltage (if used), control electrode voltage (if used).

(3) Raise high voltage to desired value, readjusting magnetic field if necessary to obtain minimum shell current. At no time should shell current exceed 5 ma.

(4) After initial set up as above, tube voltages may be applied simultaneously; however, it is recommended that heater voltage, solenoid voltage, and cooling air be applied at least two minutes before applying high voltage. Observance of the 5 ma maximum limit for shell current is essential to prevent tube damage.

The data presented here is representative of operation of this type as an amplifier with maximum bandwidth and does not indicate the maximum performance obtainable under specific conditions, particularly narrower bandwidths.

Standard solenoids to operate this tube are available, and solenoids designed for particular applications can be supplied.

Additional information for specific applications can be obtained from the

Electron Tube Applications Section
ITT Components Division
Box 412
Clifton, New Jersey

TYPICAL CHARACTERISTICS

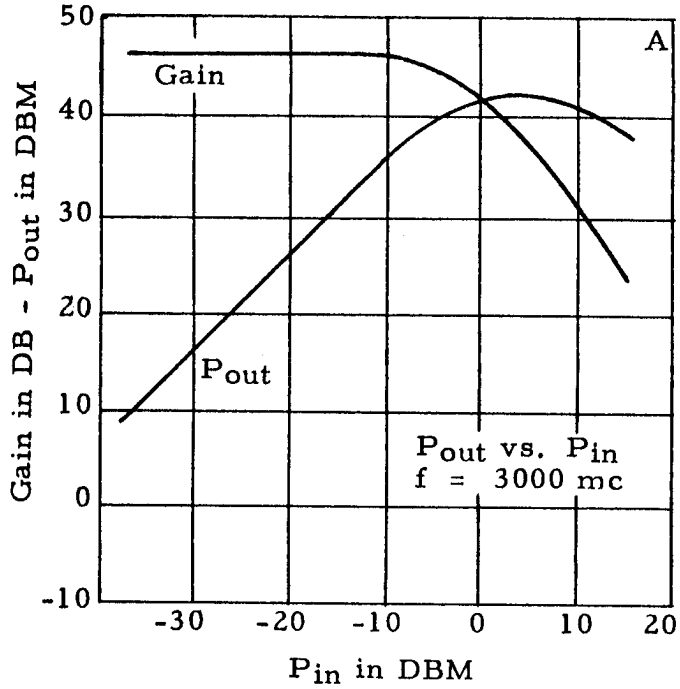

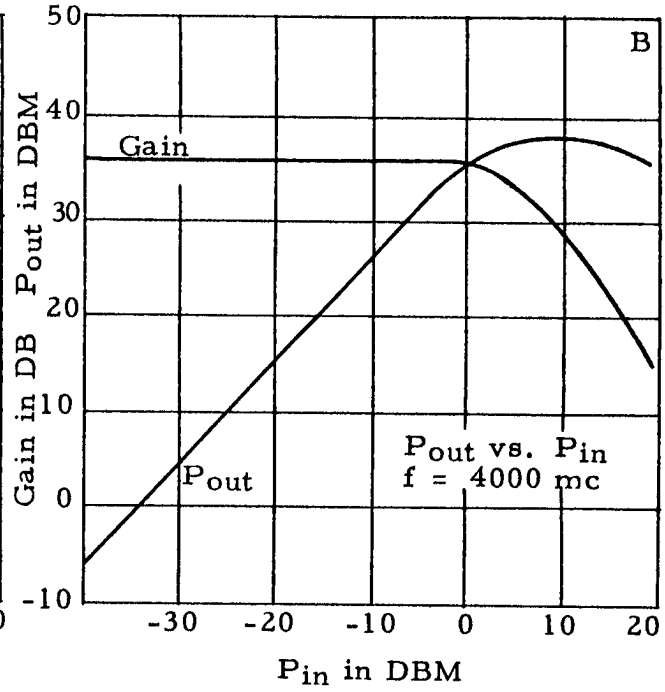

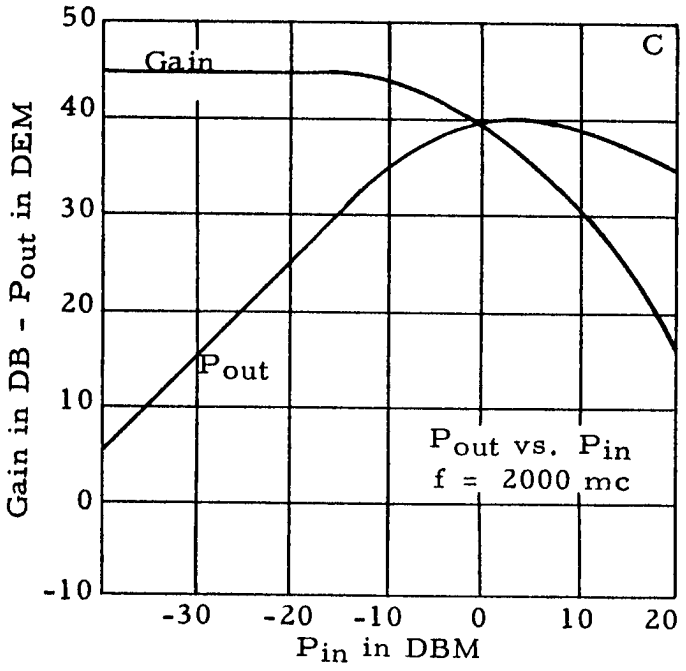

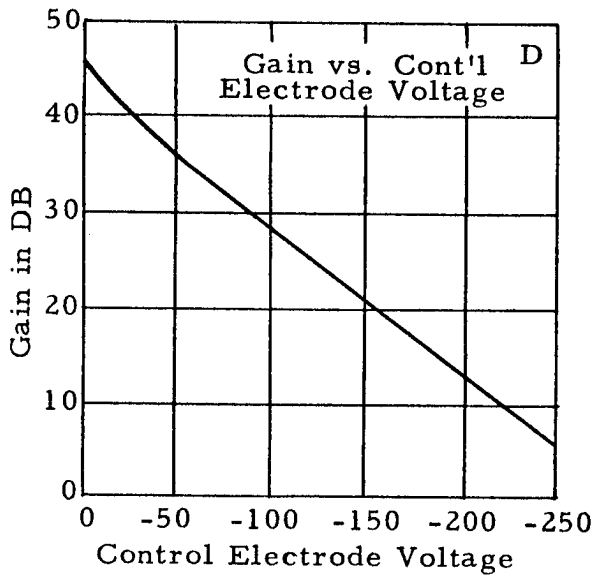

TYPICAL CHARACTERISTICS

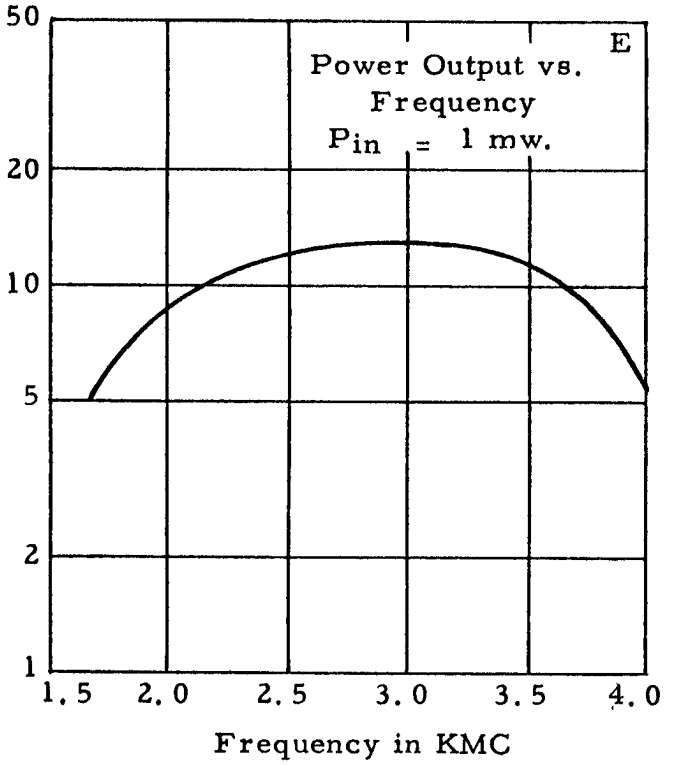

All curves shown with magnetic field set for minimum shell current in range of 750 to 1000 gauss.

For curves A, B, C, and E, voltage is set for maximum P_{out} at f = 4.0 kmc with P_{in} = 1 mw approx. 1200 v.).

For curve F, voltage is set for maximum gain at f = 4.0 kmc with P_{in} = -20 dbm. (approx. 1150 v.).

Curve D shows typical shape and range of control electrode characteristic.

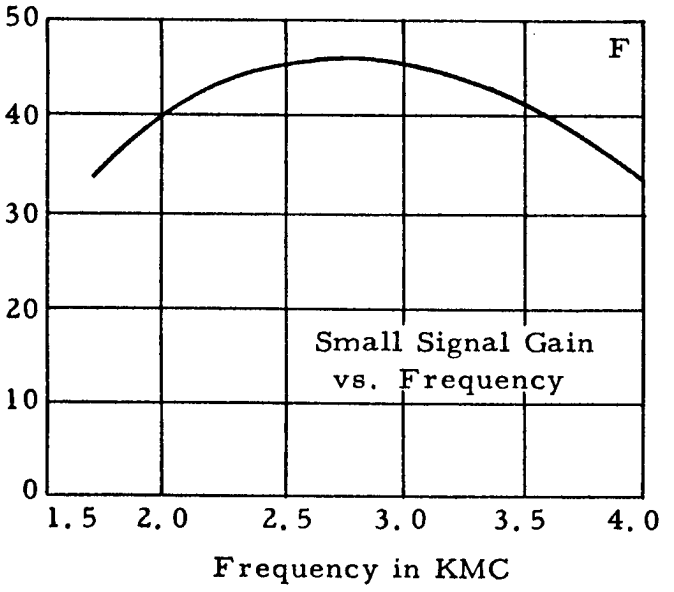

ITT
ELECTRON TUBE DEPARTMENT ■ COMPONENTS DIVISION
INTERNATIONAL TELEPHONE AND TELEGRAPH CORPORATION, CLIFTON, NEW JERSEY

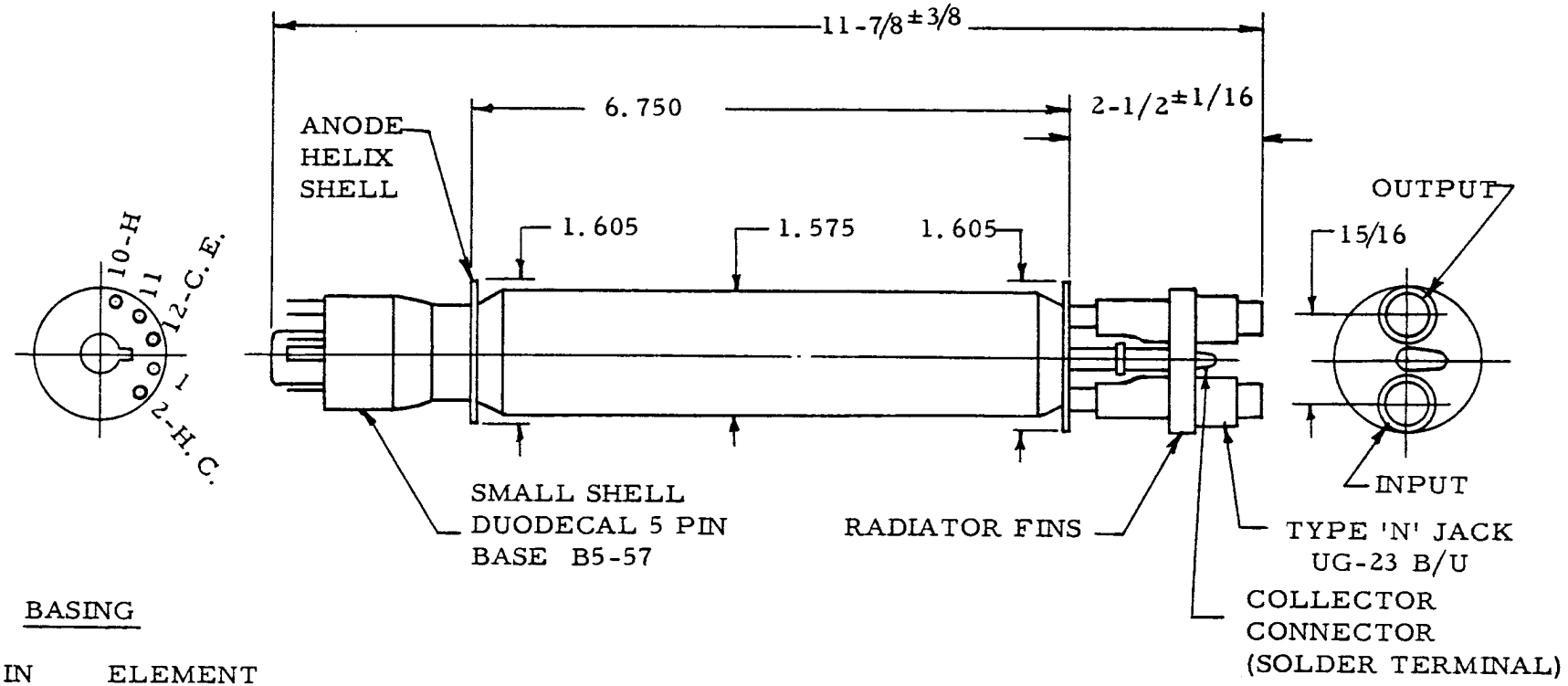

BASING

PIN	ELEMENT
1	NO CONN.
2	HEATER-CATHODE
10	HEATER
11	NO CONN.
12	CONTROL ELECTRODE

TRAVELING WAVE TUBE TYPE F-6868

OPERATING INSTRUCTIONS FOR THE F-6868 TRAVELING WAVE TUBE

WHEN PLACING THE F-6868 TRAVELING WAVE TUBE IN OPERATION FOR THE FIRST TIME, THE FOLLOWING PROCEDURE SHOULD BE FOLLOWED:

1. MAKE A VISUAL INSPECTION OF THE TUBE TO CHECK FOR LOOSE CONNECTIONS OR GLASS CRACKS.

2. PLACE THE TUBE IN THE PROPER SOLENOID AND MAKE CONNECTIONS TO THE TUBE AND SOLENOID.

   A) HEATER, HEATER/CATHODE, AND CONTROL ELECTRODE CONNECTIONS ARE MADE TO THE BASE OF THE TUBE. THE COLLECTOR CONNECTION IS MADE TO A SOLDER LUG ON THE RADIATOR. THE SHELL/HELIX CONNECTION IS MADE TO THE SHELL OF THE TUBE AND/OR THE CASE OF THE SOLENOID WHICH IS GROUNDED.

3. APPLY COOLING TO THE SOLENOID AND TO THE RADIATOR OF THE TUBE.

4. VOLTAGES ARE APPLIED IN THE FOLLOWING ORDER:

   A) HEATER VOLTAGE (6.3 VOLTS).

   B) SOLENOID VOLTAGE (ADJUST SOLENOID CURRENT FOR PROPER MAGNETIC FIELD 1000 GAUSS).

   C) CONTROL ELECTRODE VOLTAGE. (USUALLY ZERO VOLTS WITH RESPECT TO CATHODE, BUT MAY BE USED TO CONTROL OUTPUT OF TUBE BY APPLYING NEGATIVE VOLTAGE WITH RESPECT TO CATHODE. THIS ELECTRODE SHOULD NEVER GO POSITIVE WITH RESPECT TO CATHODE.)

   D) COLLECTOR VOLTAGE (+150 VOLTS WITH RESPECT TO SHELL).

   E) CATHODE VOLTAGE. ADJUST SLOWLY TO THE VALUE INDICATED ON THE DATA SHEET; USUALLY ABOUT MINUS 1250 VOLTS WITH RESPECT TO THE SHELL. AT ALL TIMES OBSERVE HELIX CURRENT AND DO NOT PERMIT TO RISE ABOVE 3.0 MA. IT IS POSSIBLE FOR HELIX CURRENT TO READ NEGATIVE WITHOUT DAMAGE TO THE TUBE, BUT BEFORE OPERATION UNDER THIS CONDITION IS PERMITTED, POLARITY OF THE HELIX CURRENT METER SHOULD BE CHECKED TO BE SURE IT IS CORRECT.

5. R.F. INPUT TO THE TUBE SHOULD BE LIMITED TO 1.0 WATT AND R.F. OUTPUT SHOULD BE LIMITED TO 20 WATTS.

6. THE CATHODE VOLTAGE MAY BE ADJUSTED FOR OPTIMUM POWER OUTPUT AT THE DESIRED FREQUENCIES.

THE FOLLOWING PRECAUTIONS SHOULD BE TAKEN WHEN OPERATING THE TRAVELING WAVE TUBE:

1. NEVER OPERATE THE F-6868 WITHOUT PROPER COOLING OF THE COLLECTOR. 50 CFM DIRECTED ACROSS THE RADIATOR FINS SHOULD BE SUFFICIENT. IN ANY CASE, THE TEMPERATURE OF THE GLASS TO METAL SEALS SHOULD NOT BE PERMITTED TO EXCEED 160°C.

2. NEVER OPERATE THE F-6868 WITHOUT THE PROPER MAGNETIC FIELD. BE SURE SUFFICIENT COOLING IS SUPPLIED TO TUBE AND SOLENOID.

3. NEVER OPERATE THE F-6868 WITH HELIX CURRENT IN EXCESS OF 3.0 MA. UNDER MOST CONDITIONS HELIX CURRENT WILL BE 1.0 MA OR LESS. IT IS IMPORTANT THAT HELIX OVERLOAD PROTECTION BE PROVIDED.

4. BE SURE COAXIAL CABLES TO BE CONNECTED TO THE TUBE INPUT AND OUTPUT CONNECTORS ARE ASSEMBLED CORRECTLY. IF THE INNER CONDUCTOR OF THE CABLE CONNECTION IS TOO LONG, PRESSURE WILL BE APPLIED TO A GLASS BEAD INSIDE THE TUBE, CAUSING PERMANENT DAMAGE TO THE TUBE. IF THE INNER CONDUCTOR OF THE CABLE CONNECTOR IS TOO SHORT, A POOR CONNECTION WILL RESULT IN POOR R.F. PERFORMANCE.

THE ATTACHED SCHEMATIC IS A SUGGESTED METHOD OF CONNECTING THE F-6868 SHOWING LOCATION OF PROTECTION CIRCUITS AND METER POLARITY.

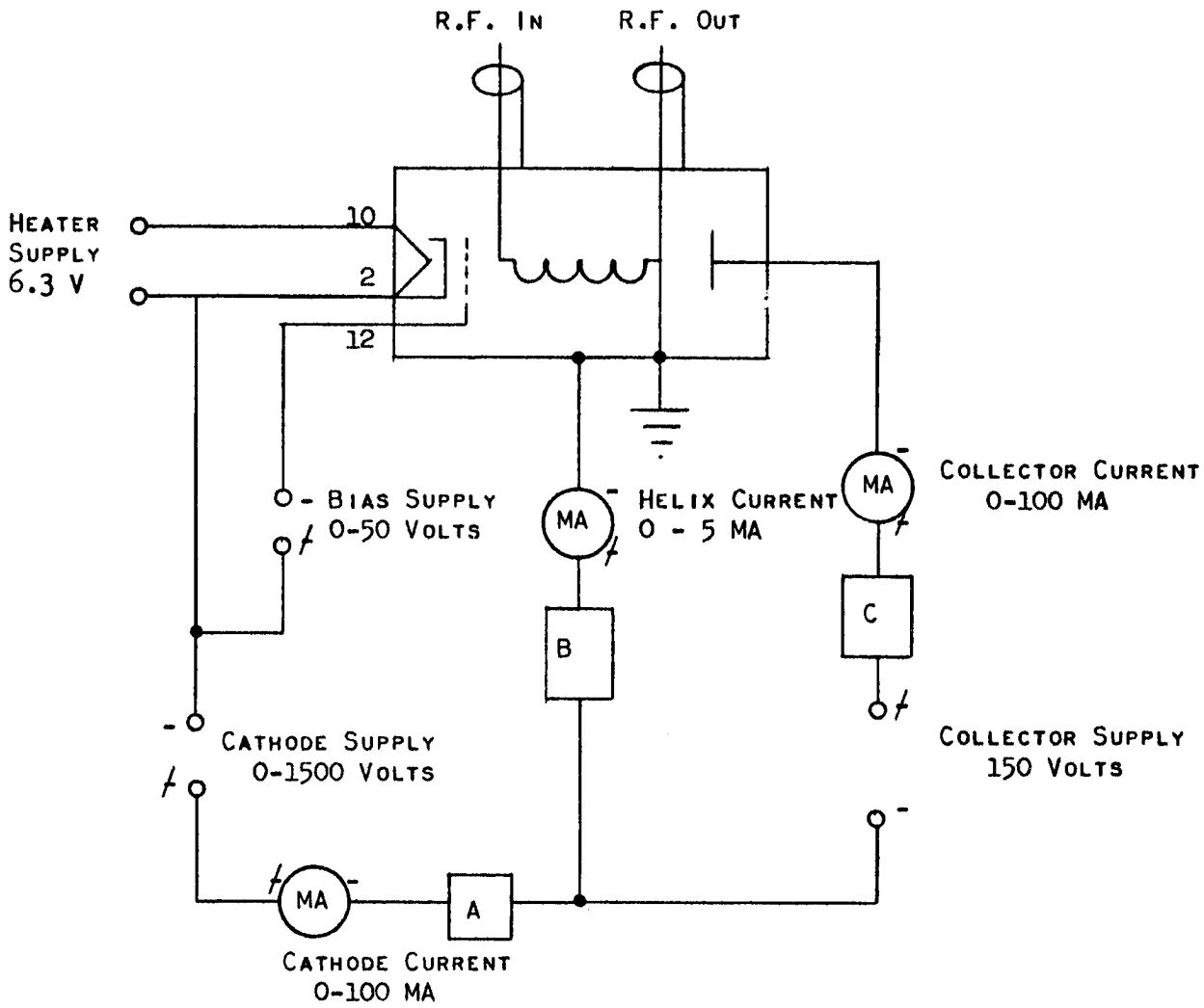

BASE CONNECTIONS

PIN 2 - HEATER CATHODE
PIN 10 - HEATER
PIN 12 - CONTROL ELECTRODE

A. CATHODE CURRENT OVERLOAD PROTECTION SET AT 90 MA.

B. HELIX CURRENT OVERLOAD PROTECTION SET AT 3.0 MA.

C. COLLECTOR CURRENT OVERLOAD PROTECTION SET AT 90 MA.

NOTE: ALL OVERLOADS SHOULD OPERATE TO DISCONNECT HIGH VOLTAGE.

CONNECTION DIAGRAM FOR F-6868 TWT TUBE

engineering TUBE DATA

F-6920
PULSE
TRIODE

ITT Components Division

DESCRIPTION

The F-6920 is a three electrode tube designed for pulse applications as a hard tube modulator. The anode is capable of dissipating 10 kilowatts exclusive of filament power. Cooling is accomplished by forced air. The cathode is a thoriated tungsten filament.

ELECTRICAL

Filament Voltage	11 volts
Filament Current	285 amperes
Filament Starting Current	1000 amperes
Amplification Factor	
I_b = 2 amperes; E_c = -50 volts	41
Plate Cut-Off	
E_p = 30 kilovolts; E_g = -1 kilovolt	.1 max. ma
Direct Inter-electrode Capacitances	
Grid-Plate	34 μμf
Grid-Filament	75 μμf
Plate-Filament	2.6 μμf

MECHANICAL

Mounting Position			Vertical, Anode Down	
Type of Cooling			Forced Air	
Maximum Incoming Air Temperature			50°C	
Required Air Flow on Anode				
Plate Dissipation+	10	8	5	kilowatts
Air Flow	800	700	500	cfm
Static Pressure	2.75	2	1	inches of water
Maximum Glass Temperature			180°C	
Net Weight, approximate			60 pounds	

+This does not include filament excitation power.

ITT COMPONENTS DIVISION
INTERNATIONAL TELEPHONE AND TELEGRAPH CORPORATION
P. O. BOX 412, CLIFTON, NEW JERSEY

MAXIMUM RATINGS AND TYPICAL OPERATING CONDITIONS

Maximum Ratings, Absolute Values

D-C Plate Voltage	35	35* max.	kilovolts
Peak Positive Plate Voltage (Instantaneous)	40	40* max.	kilovolts
D-C Grid Voltage	-2.0	-2.0* max.	kilovolts
Peak Positive Grid Voltage	5	5* max.	kilovolts
Pulse Plate Current	100	150* max.	amperes
Pulse Grid Current	65	100* max.	amperes
Plate Dissipation	10	10* max.	kilowatts
Grid Dissipation	2	2* max.	kilowatts
Duty Factor	.002	.002* max.	
Pulse Length	15	15* max.	μseconds
Pulse Cathode Current	140	200* max.	amperes

Typical Operation

D-C Plate Voltage	18	30*	kilovolts
Pulse Plate Current	90	150*	amperes
D-C Grid Voltage	-1.2	-1.0*	kilovolts
Pulse Grid Current	25	50*	amperes
Pulse Positive Grid Voltage	2.8	4*	kilovolts
Duty Factor	.0008	.001*	
Pulse Length	1	.25*	μseconds
Plate Output Voltage	16.5	27.5*	kilovolts

*These ratings apply only under elevated filament temperatures as specified as follows:

	Min.	Bogey	Max.	
Filament Voltage	11.5	11.9	12.3	volts
Filament Emission E_f = 11.6 v. $E_p = E_g$ = 3 kv.	170			amperes

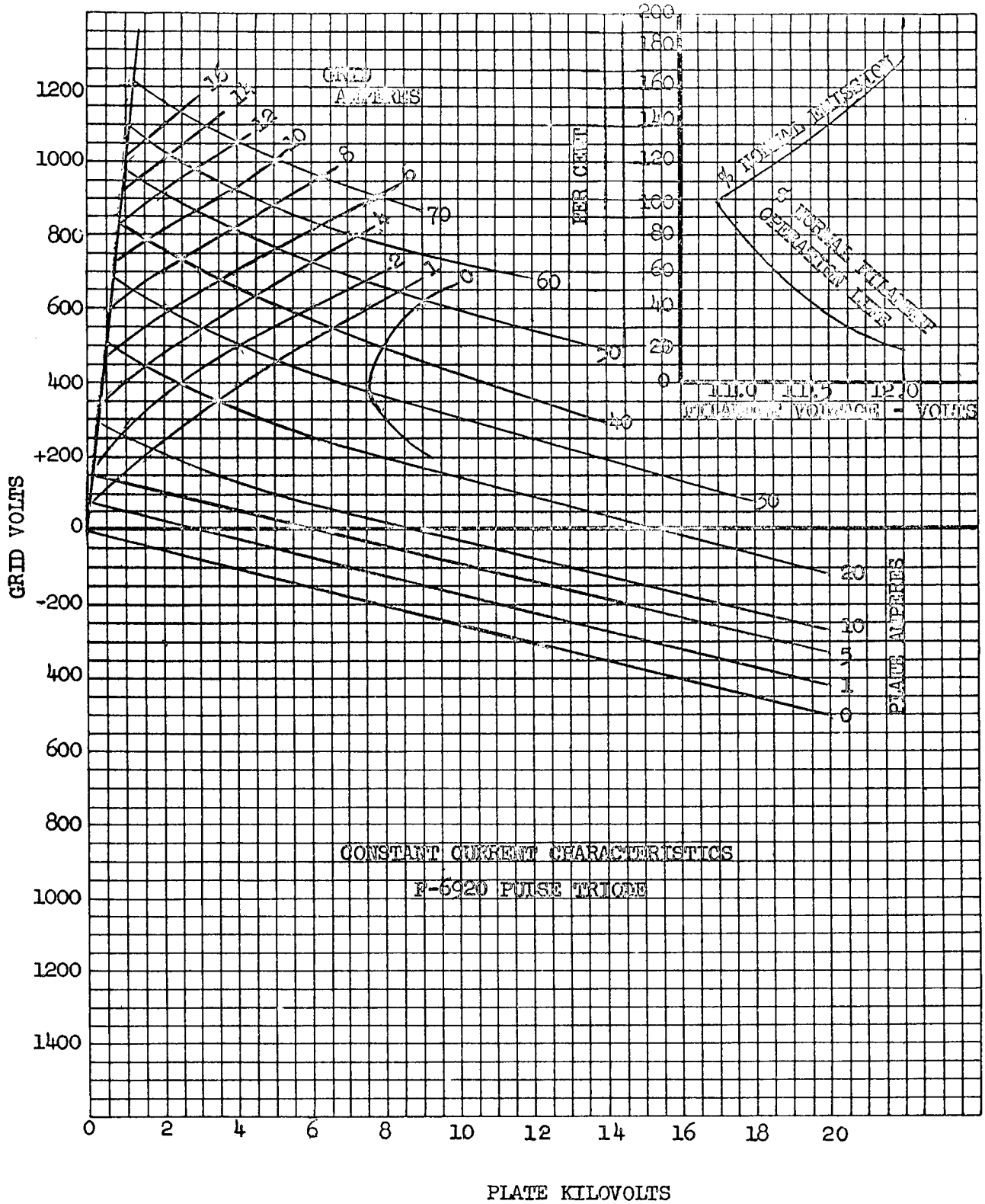
GRID VOLTS
PLATE KILOVOLTS
GRID AMPERES
PER CENT
PLATE AMPERES
PLATE VOLTAGE - VOLTS
CONSTANT CURRENT CHARACTERISTICS
F-6920 PULSE TRIODE

419

TERMINALS
BLACK - GRID
YELLOW- FIL. 1
RED - FIL. 2

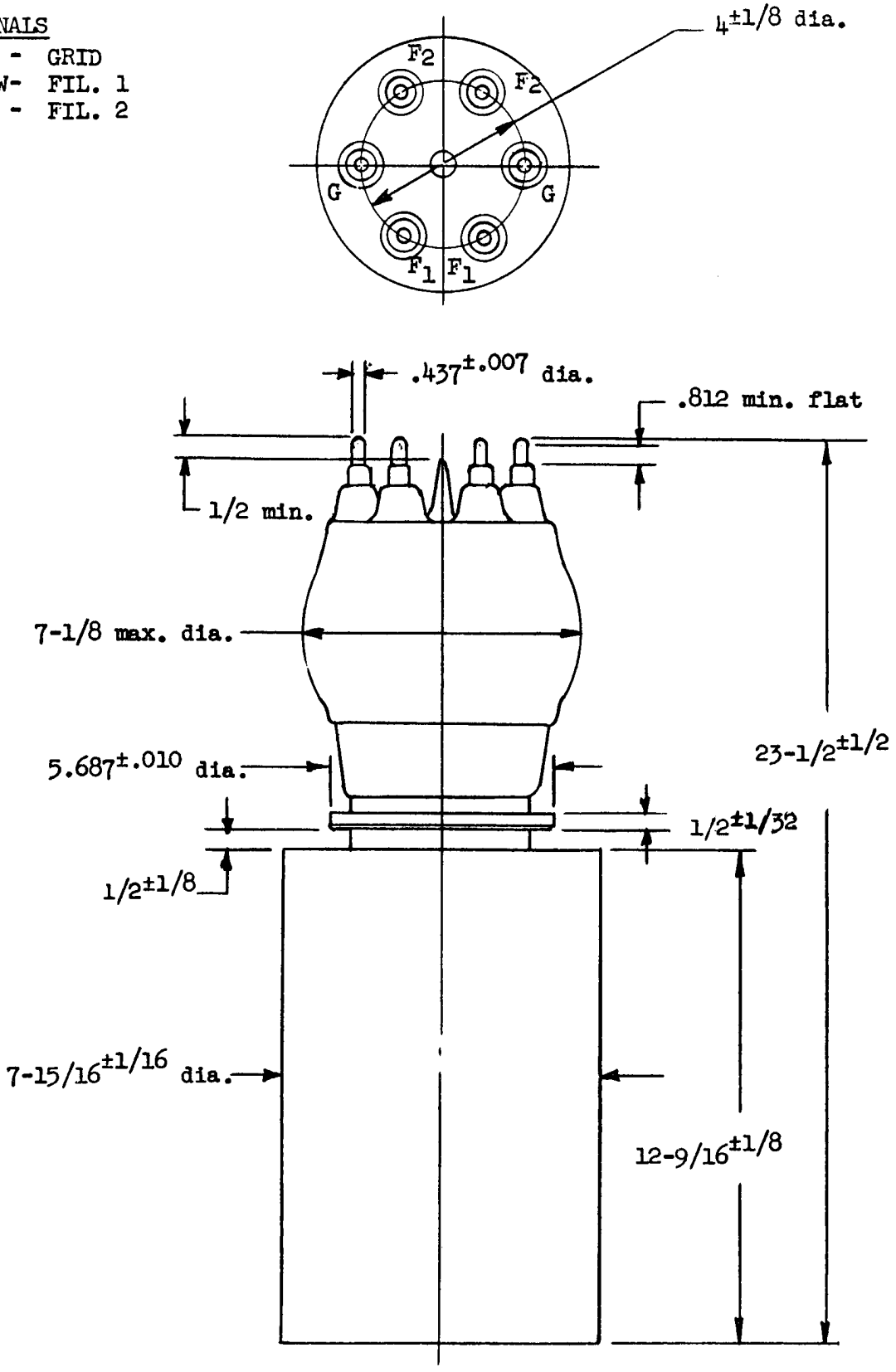

OUTLINE
F-6920 PULSE TRIODE

engineering TUBE DATA

F-6921
POWER
TRIODE

ITT *Components Division*

DESCRIPTION

The F-6921 is a three-electrode tube designed for use as a modulator. The anode is capable of dissipating 30 kw during Continuous Commercial Service. Cooling is accomplished by circulating water. The cathode is a thoriated tungsten filament. Maximum ratings apply for audio frequency use only.

ELECTRICAL

Filament Voltage	5 volts
Filament Current	260 amperes
Amplification Factor	4.25
Inter-electrode Capacitance	
Grid-Plate	53 μμf
Grid-Filament	48 μμf
Plate-Filament	7.5 μμf

MECHANICAL

Mounting Position	Vertical, Anode Down
Type of Cooling	Water
Water Flow, minimum	30 gpm
Maximum Glass Temperature	180°C
Weight, approximate	12 lbs.

MAXIMUM RATINGS AND TYPICAL OPERATING CONDITIONS

Audio Frequency Power Amplifier and Modulator--Class AB_1

Maximum Ratings, Absolute Values

D-C Plate Voltage	15 max. kv
Maximum Signal D-C Plate Current*	10 amperes
Maximum Signal Plate Input*	60 kw
Plate Dissipation*	30 kw

*Averaged over any audio frequency cycle of sine-wave form.

ITT COMPONENTS DIVISION
INTERNATIONAL TELEPHONE AND TELEGRAPH CORPORATION
P. O. BOX 412, CLIFTON, NEW JERSEY

F-6921
POWER
TRIODE

Typical Operation
(Unless otherwise specified, values are for two tubes)

D-C Plate Voltage	10,000 volts
D-C Grid Voltage	-2,400 volts
Peak A-F Grid-to-Grid Voltage	4,680 volts
Zero Signal D-C Plate Current	2.0 amperes
Maximum Signal D-C Plate Current	9.5 amperes
Effective Load, Resistance Plate-to-Plate	1870 ohms
Maximum Signal Driving Power	0 watts
Maximum Signal Power Output	52.5 kw

Random Noise Drive Conditions

D-C Plate Voltage	12,500 volts
D-C Grid Voltage	-3,200 volts
Peak A-F Grid-to-Grid Voltage	6,100 volts
Zero Signal D-C Plate Current	1.5 amperes
Maximum Signal D-C Plate Current	4.5 amperes
Effective Load Resistance Plate-to-Plate	7400 ohms
Maximum Signal Driving Power	0 watts
Output Crest Value	90,000 volt amperes
Duty Factor at Crest Value	.01
Load Power Factor	0 - 100%

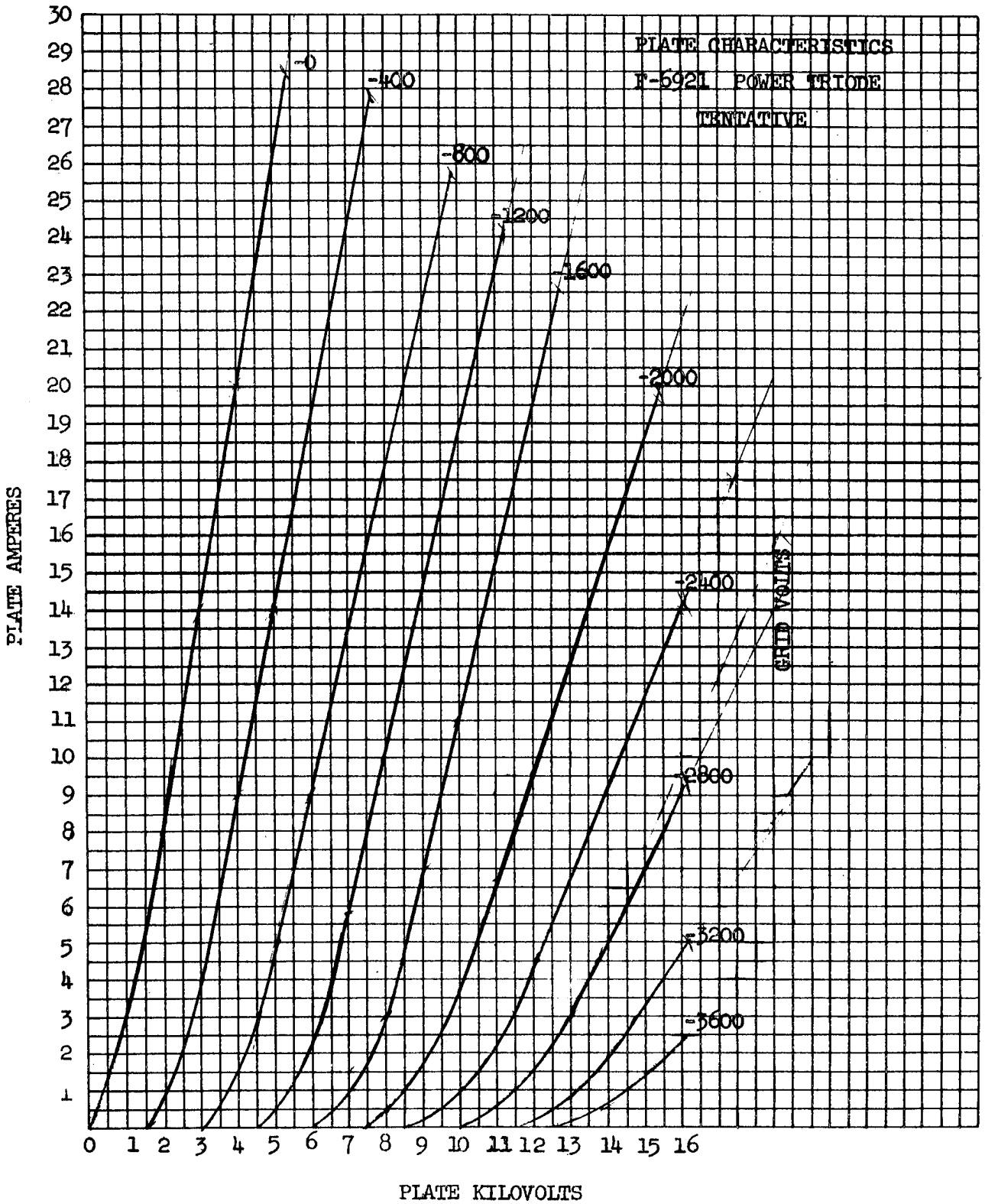

417

ITT COMPONENTS DIVISION
INTERNATIONAL TELEPHONE AND TELEGRAPH CORPORATION
P. O. BOX 412, CLIFTON, NEW JERSEY

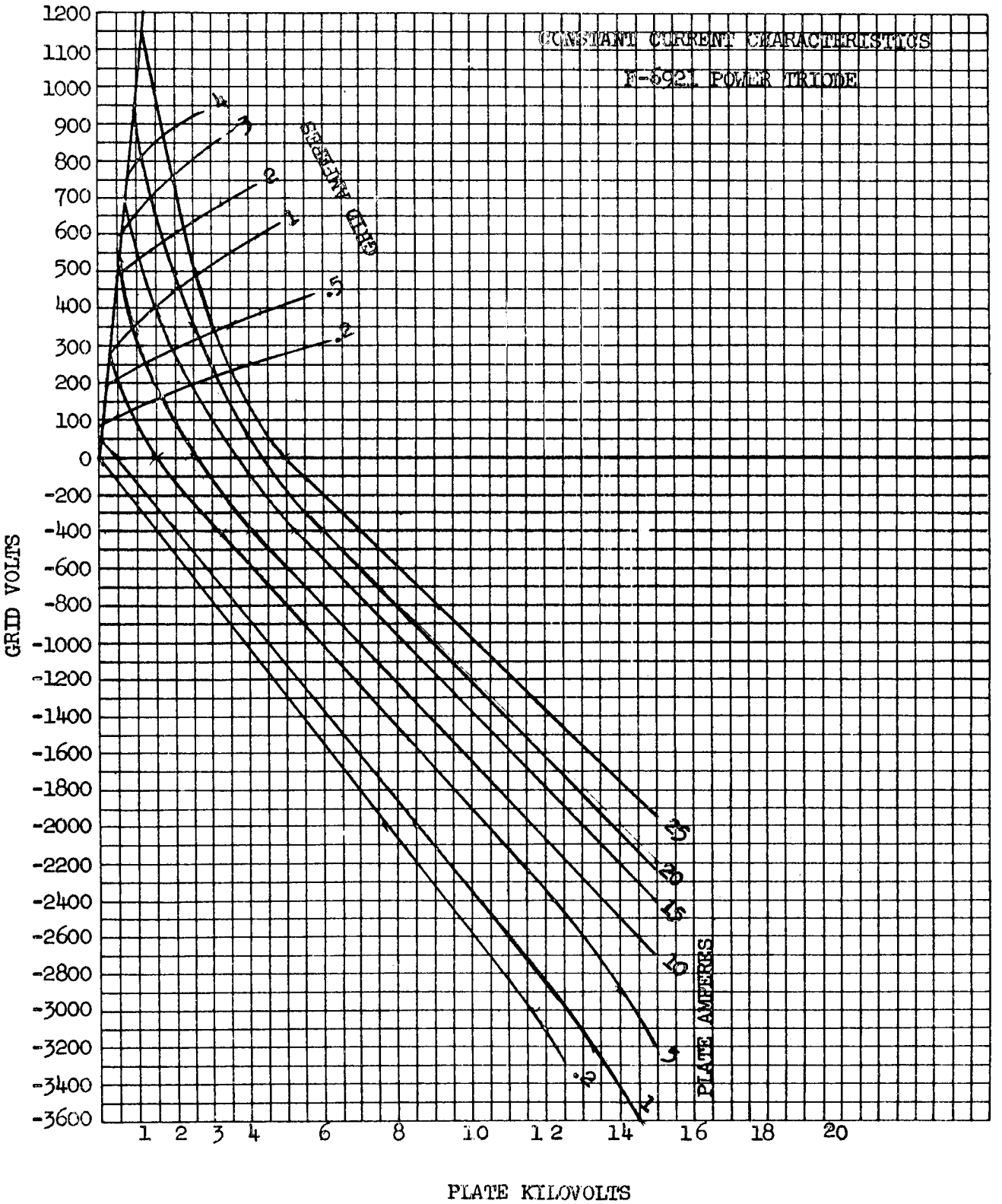
CONSTANT CURRENT CHARACTERISTICS
F-692L POWER TRIODE
GRID VOLTS
PLATE KILOVOLTS
PLATE AMPERES
EFFICIENT GRID
1200
1100
1000
900
800
700
600
500
400
300
200
100
0
-200
-400
-600
-800
-1000
-1200
-1400
-1600
-1800
-2000
-2200
-2400
-2600
-2800
-3000
-3200
-3400
-3600
1 2 3 4 6 8 10 12 14 16 18 20
.5
.2

TERMINALS

BLACK - GRID
YELLOW- FIL. 1
RED - FIL. 2

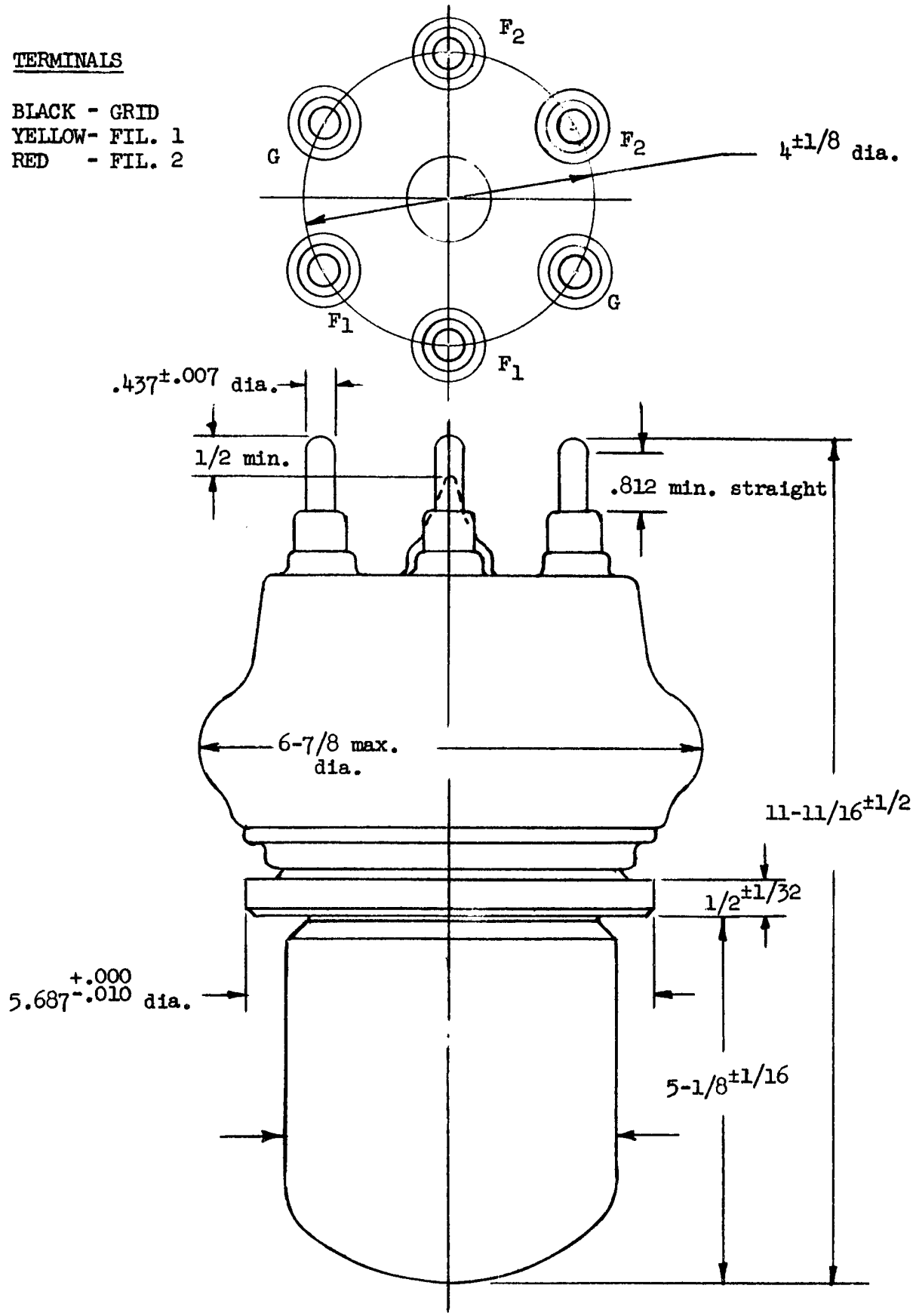

OUTLINE

F-6921 POWER TRIODE

ITT COMPONENTS DIVISION
INTERNATIONAL TELEPHONE AND TELEGRAPH CORPORATION
P. O. BOX 412, CLIFTON, NEW JERSEY

engineering TUBE DATA

F-6925
POWER TRIODE

ITT Components Division

DESCRIPTION

The F-6925 is a triode designed for use as a modulator, r-f amplifier, and oscillator. The anode is of heavy wall construction and is forced air cooled, capable of dissipating 3 kilowatts during Continuous Commercial Service.

ELECTRICAL

Filament Voltage	13 volts
Filament Current	36 amperes
Amplification Factor	17
Direct Inter-electrode Capacitance	
Grid-Plate	21 μμf
Grid-Filament	18 μμf
Plate-Filament	1.9 μμf

MECHANICAL

Mounting Position		Vertical, Anode up or down	
Type of Cooling			Forced Air
Anode Air Flow Required			
Plate Dissipation - kw	3.0	2.4	1.8
Air Flow - cfm	190	125	75
Pressure - inches of water	1.21	.58	.26
Maximum Incoming Air Temperature			45°C
Maximum Glass Temperature			180°C

MAXIMUM RATINGS AND TYPICAL OPERATING CONDITIONS

R-F Power Amplifier and Oscillator - Class C
(Key down conditions per tube without Amplitude Modulation)

Maximum Ratings, Absolute Values

D-C Plate Voltage	6.5 max. kv
D-C Grid Voltage	-1.2 max. kv
D-C Plate Current	2.0 max. amperes
D-C Grid Current	.250 max. amperes
Plate Input	12 max. kw
Plate Dissipation	3 max. kw

ITT COMPONENTS DIVISION
INTERNATIONAL TELEPHONE AND TELEGRAPH CORPORATION
P. O. BOX 412, CLIFTON, NEW JERSEY

Typical Operation

D-C Plate Voltage	2500	4000	6000 volts
D-C Grid Voltage	-600	-800	-1000 volts
Peak R-F Grid Voltage	1050	1300	1500 volts
Peak R-F Plate Voltage	1800	3000	5000 volts
D-C Plate Current	1.27	1.6	1.6 amperes
D-C Grid Current	.233	.230	.210 amperes
Driving Power, approx.	245	300	315 watts
Power Output, approx.	2.15	4.4	7.25 kw

This tube type is also available with 1/2" wide flexible copper leads, 6" long, attached two to a terminal.

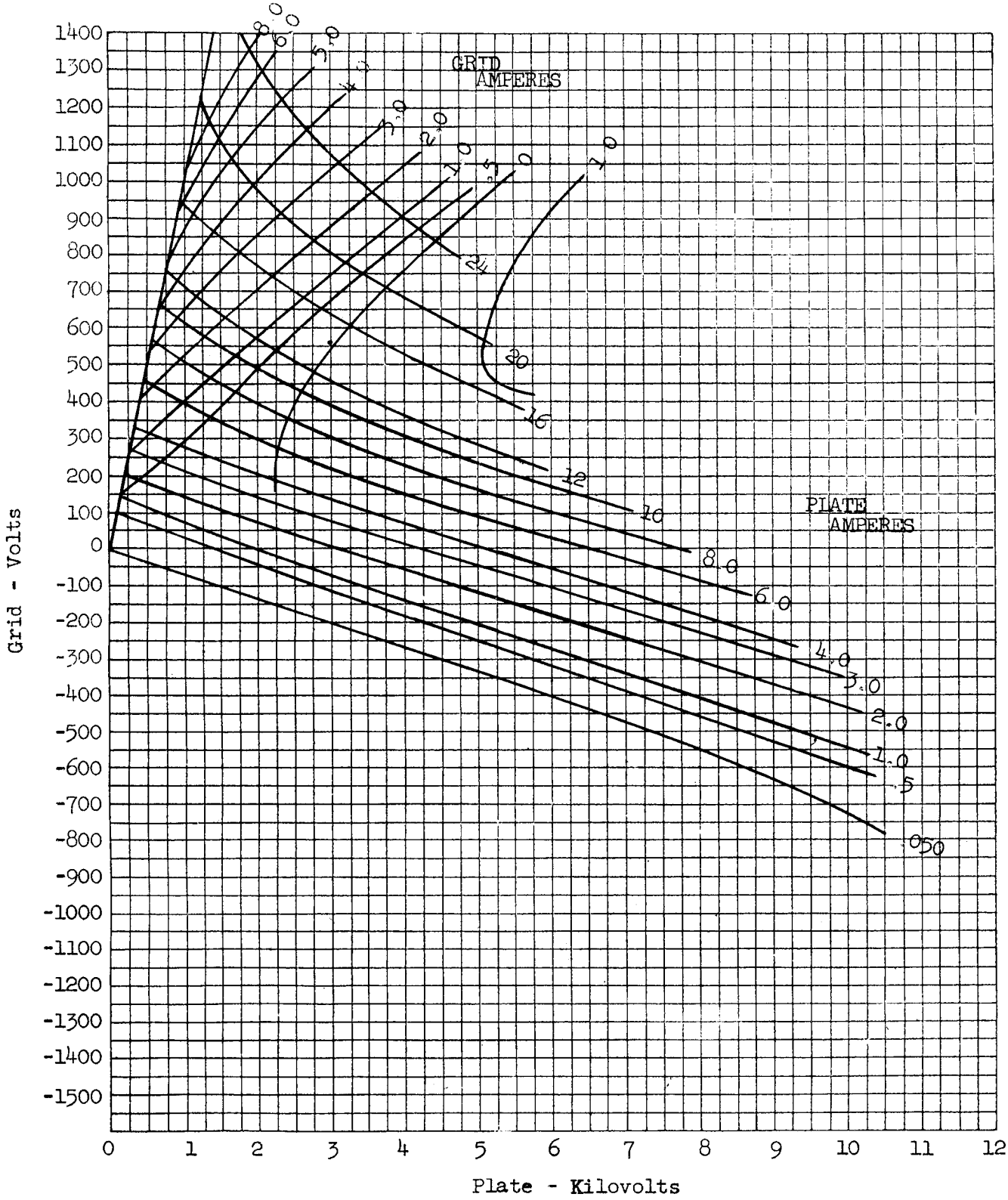

CONSTANT CURRENT CHARACTERISTICS

TYPES F-6925, F-6926 & F-6926J POWER TRIODES

ITT COMPONENTS DIVISION
INTERNATIONAL TELEPHONE AND TELEGRAPH CORPORATION
P. O. BOX 412, CLIFTON, NEW JERSEY

FIL. TERM. --- YELLOW
FIL. TERM. CENT. --- RED
GRID TERM. --- BLACK

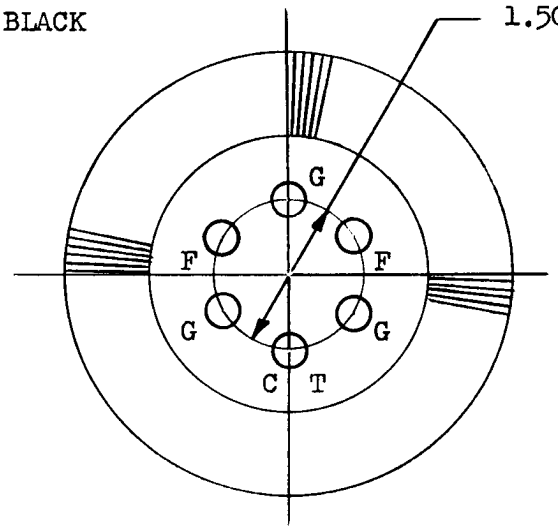

NOTE: 1/2" flexible copper lead 6" long available on each terminal upon request.

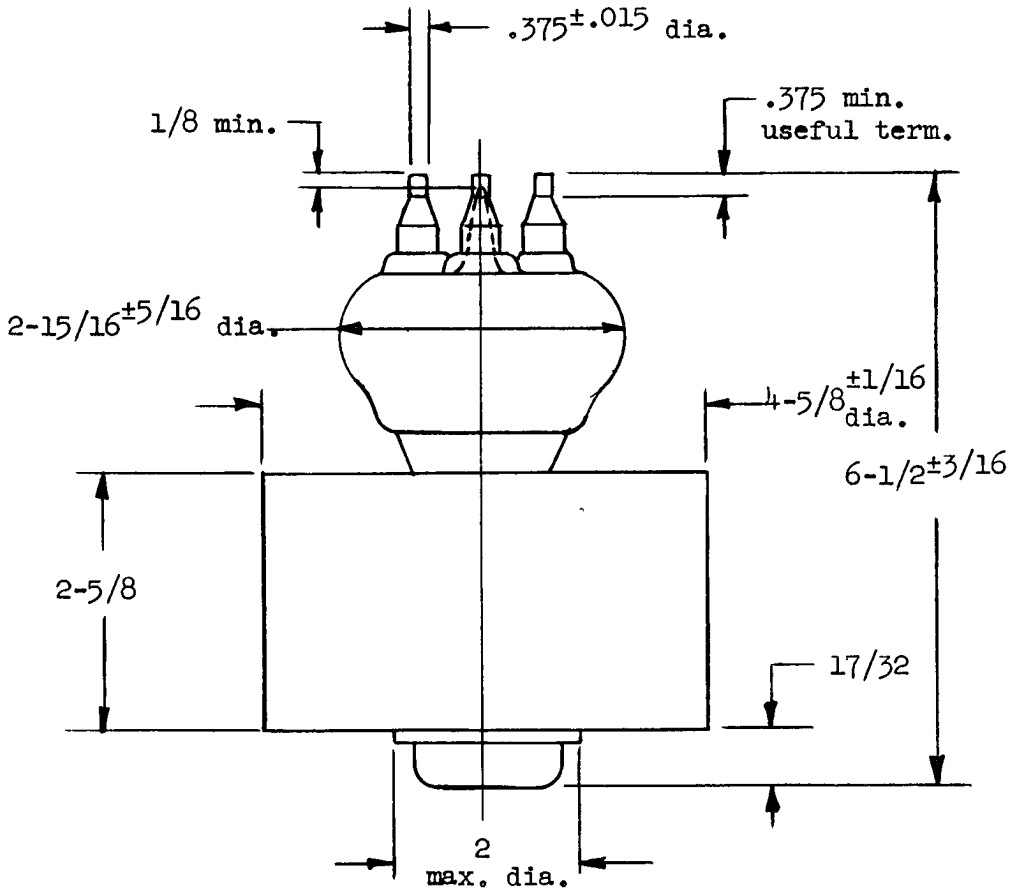

OUTLINE

TYPE F-6925 POWER TRIODE

F-6926 & F-6926-J
POWER TRIODES

ITT Components Division

DESCRIPTION

The F-6926 and F-6926-J are triodes designed for use as modulators, r-f amplifiers, and oscillators. The anodes are of heavy wall construction and are water cooled. 6 kilowatts of power may be dissipated during Continuous Commercial Service. F-6926-J is provided with an integral water jacket attached to the tube.

ELECTRICAL

Filament Voltage	13 volts
Filament Current	36 amperes
Amplification Factor	17
Direct Inter-electrode Capacitance	
Grid-Plate	20.5 μμf
Grid-Filament	18 μμf
Plate-Filament	1.9 μμf

MECHANICAL

Mounting Position	Vertical, anode down
Type of Cooling	Circulating Water
Anode Water Flow required	3.5 gpm
Water Pressure, max.	80 psi
Outlet Water Temperature, max.	70°C
Maximum Glass Temperature	180° C

MAXIMUM RATING AND TYPICAL OPERATING CONDITIONS

R-F Power Amplifier and Oscillator - Class C
(Key down conditions per tube without Amplitude Modulation)

Maximum Ratings, Absolute Values

D-C Plate Voltage	6.5 max. kv
D-C Grid Voltage	-1.2 max. kv
D-C Plate Current	2.0 max. amperes
D-C Grid Current	.250 max.amperes
Plate Input	12 max. kw
Plate Dissipation	6 max. kw

ITT COMPONENTS DIVISION
INTERNATIONAL TELEPHONE AND TELEGRAPH CORPORATION
P. O. BOX 412, CLIFTON, NEW JERSEY

F-6926
&
F-6926-J
POWER TRIODES

Typical Operation

D-C Plate Voltage	2500	4000	6000	volts
D-C Grid Voltage	-600	-800	-1000	volts
Peak R-F Grid Voltage	1050	1300	1500	volts
Peak R-F Plate Voltage	1800	3000	5000	volts
D-C Plate Current	1.27	1.6	1.6	amperes
D-C Grid Current	.233	.230	.210	amperes
Driving Power, approximate	245	300	315	watts
Power Output, approximate	2.15	4.4	7.25	kilowatts

These tube types are also available with 1/2 inch wide flexible copper leads, 6 inches long, attached two to a terminal.

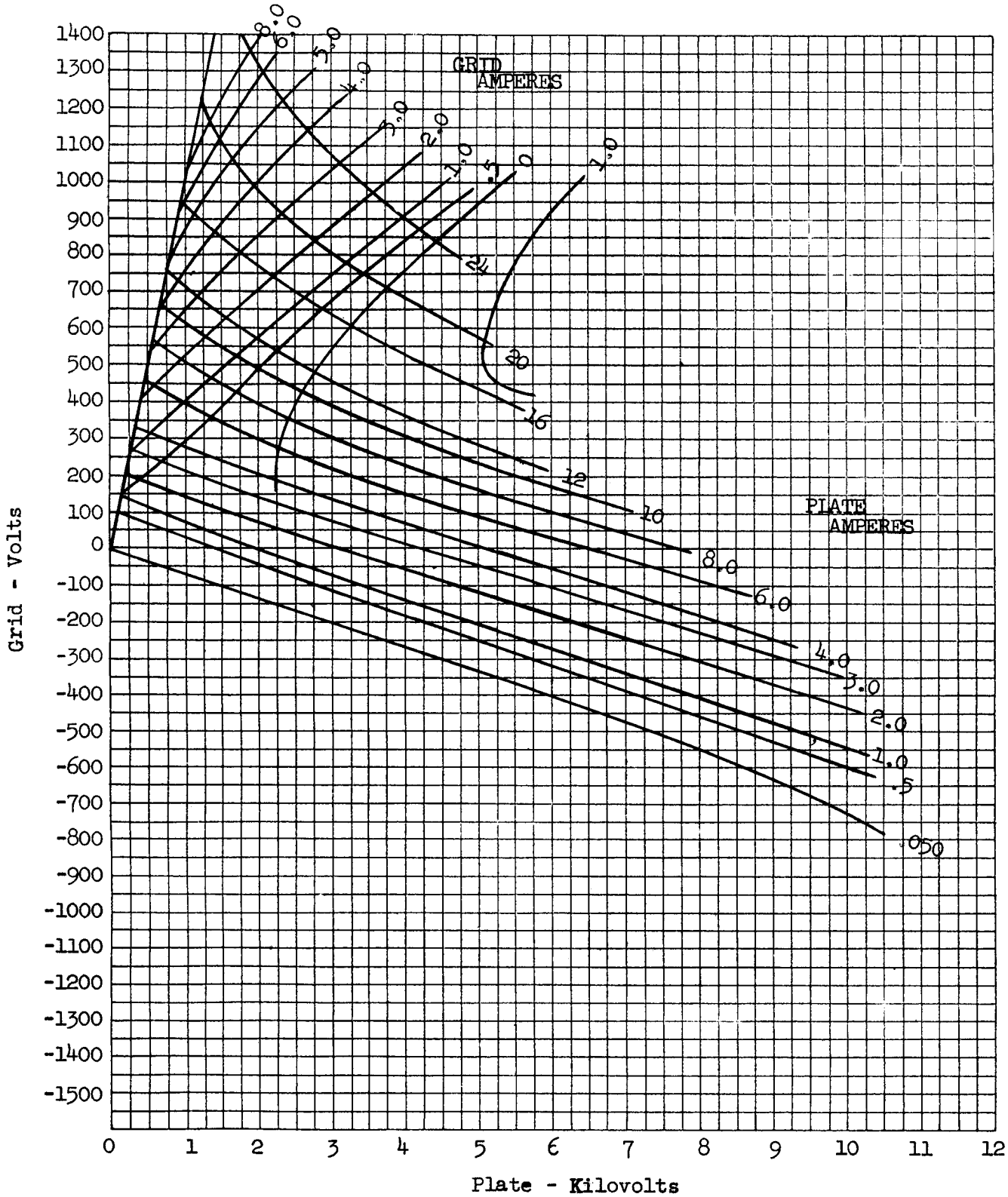

CONSTANT CURRENT CHARACTERISTICS

TYPES F-6925, F-6926 & F-6926J POWER TRIODES

ITT COMPONENTS DIVISION
INTERNATIONAL TELEPHONE AND TELEGRAPH CORPORATION
P. O. BOX 412, CLIFTON, NEW JERSEY

FIL. TERM. - YELLOW
FIL. CENT. TERM. - RED
GRID TERM. - BLACK

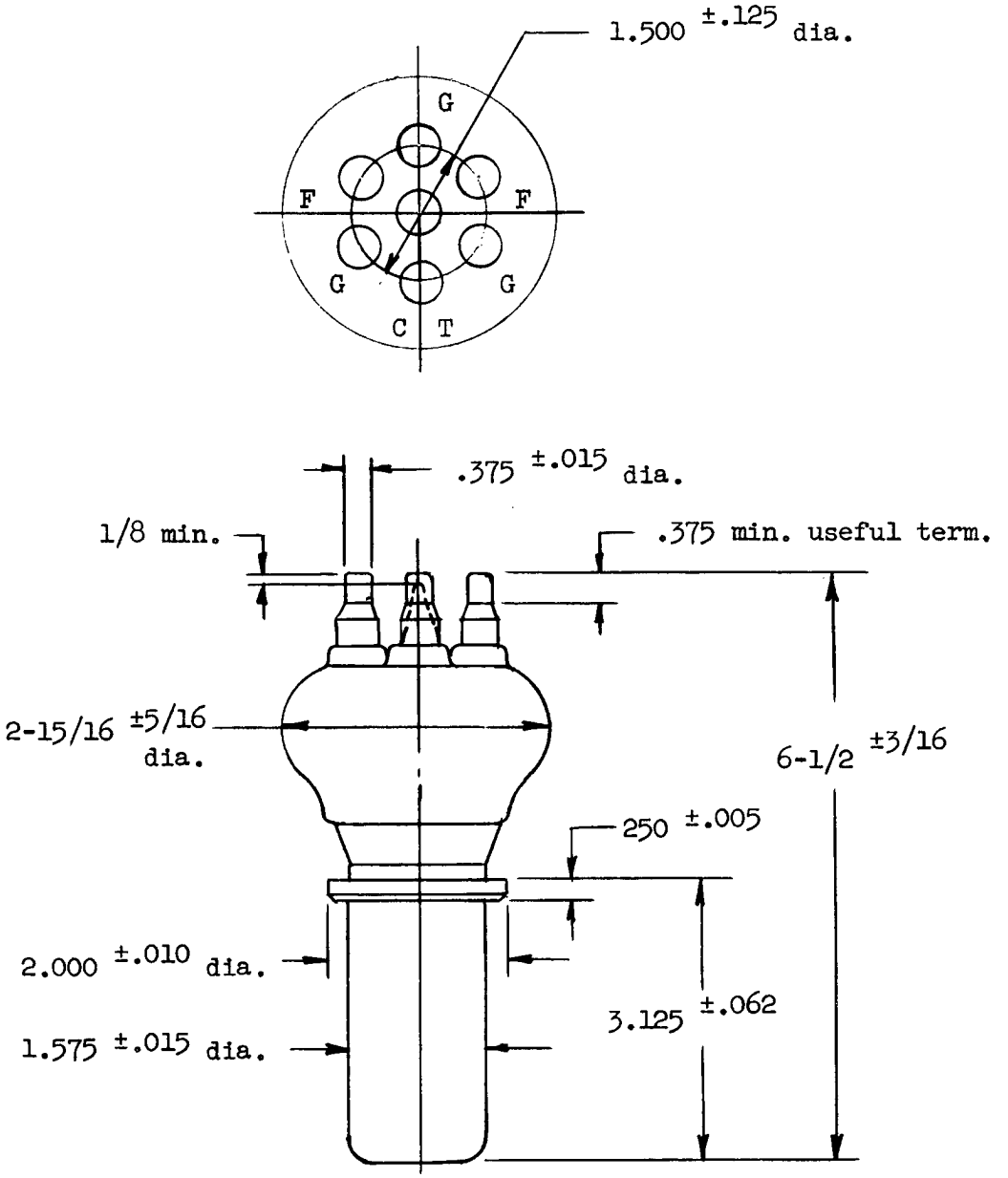

NOTE: 1/2" flexible copper lead 6" long available on each terminal upon request.

OUTLINE
F-6926 POWER TRIODE

FIL. TERM. - YELLOW
FIL. CENT. TERM. - RED
GRID TERM. - BLACK

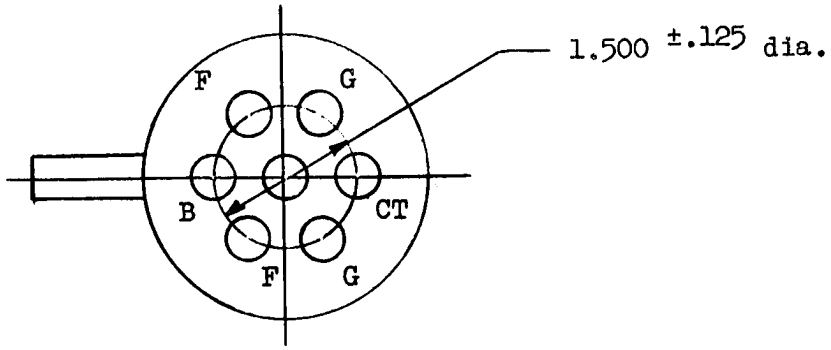

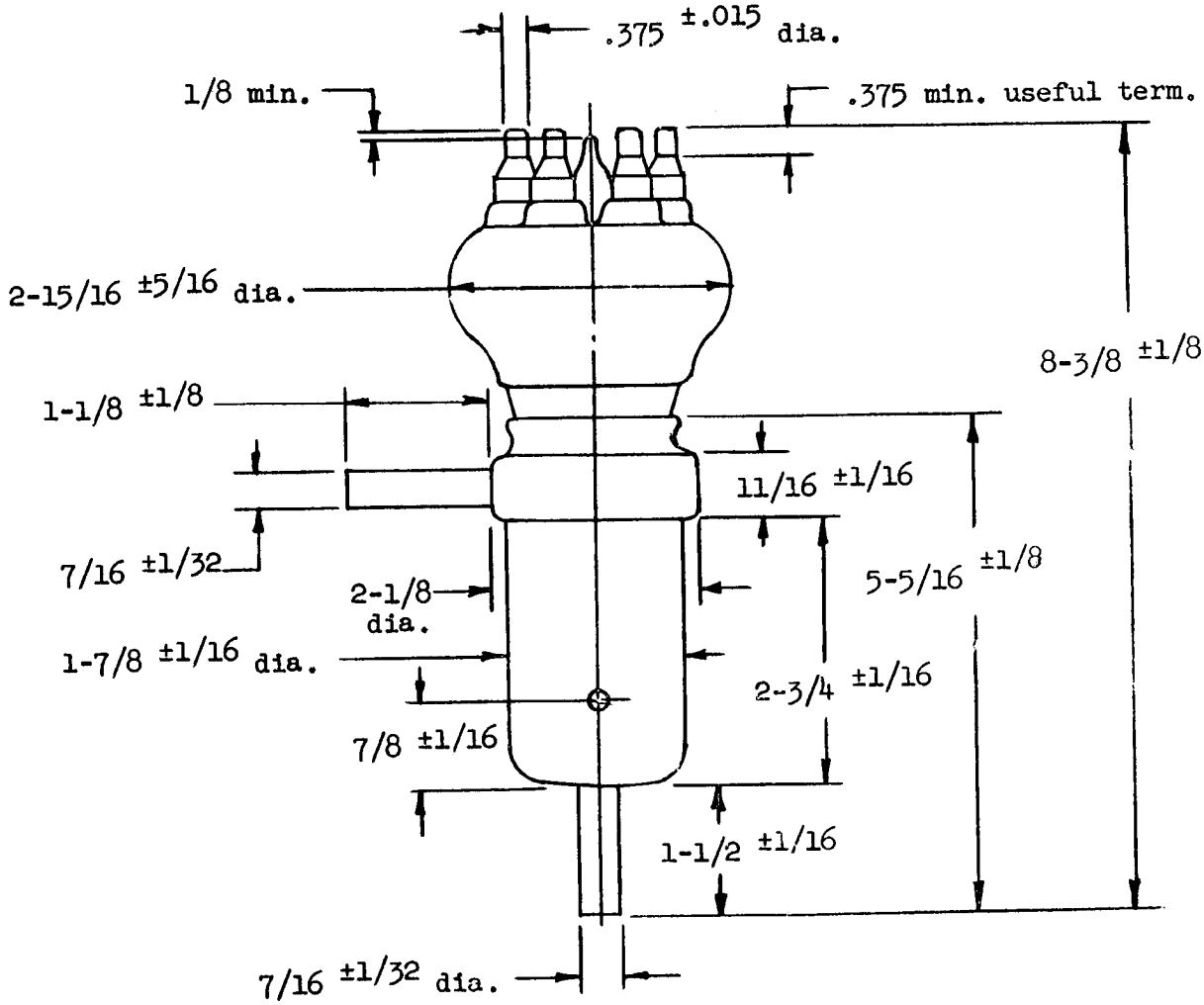

NOTE: 1/2" flexible copper lead 6" long available on each terminal upon request.

OUTLINE
F-6926-J POWER TRIODE

ITT COMPONENTS DIVISION
INTERNATIONAL TELEPHONE AND TELEGRAPH CORPORATION
P. O. BOX 412, CLIFTON, NEW JERSEY

TENTATIVE

DESCRIPTION:

The F-6996 is a 10 watt CW traveling wave amplifier tube having 30 db gain and 8000 to 9600 mc frequency range. It is constructed in a rugged metal envelope with a helix-type slow wave structure. The integral matching circuit is in 50 ohm coaxial line and is provided with type "N" connectors. The tube is self-aligning in the external solenoid which is required to provide a uniform magnetic field. A convergent beam gun and oxide impregnated cathode are used. The tube is suitable for either CW or pulse service.

ELECTRICAL RATINGS, ABSOLUTE VALUES:

Heater Voltage	6.3 (±10%)	volts
Heater Current	2.3	amperes
Maximum Anode Voltage (Note 1)	3400	volts
Maximum Shell Current (Note 2)	3	ma
Maximum Collector Voltage (Note 3)	3500	volts
Maximum Collector Dissipation (Note 4)	200	watts
Maximum Control Electrode Voltage (Note 5)	-250	volts

ELECTRICAL INFORMATION:

Maximum Frequency	9600	mc
Minimum Frequency	8000	mc
Minimum Cold Transmission Loss	50	db
Capacitance		
Control Electrode to All Other Elements	10	μμfd
All Gun Elements to Shell	4.8	μμfd

MECHANICAL INFORMATION:

Type of Cathode	Oxide Impregnated Unipotential	
Base, Small Shell Duodecal, 5 Pin	JEDEC Designation B5-57	
Type of Envelope		Metal
Magnetic Field Strength (Nominal)	1300	Gauss
Length of Magnetic Field	6.75	inches uniform
Mounting Position		Any
Weight (not including Magnet)		1 lb. 7 ozs.
R-F Connections	50 ohm coax with type "N" Jack UG-23B/U	
Type of Cooling		Forced Air
Glass Temperature	160°C	max.
Cooling Air Required (Note 4)	70	cfm

TYPICAL OPERATION AS POWER AMPLIFIER:

Anode Voltage	3200	volts
Shell Current	1	ma
Collector Voltage	3300	volts
Collector Current	50	ma
Control Electrode Voltage	-15	volts
Power Output	10	watts nominal
Gain	30	db nominal
Duty Cycle		
R-F	Variable to 1.0	
Beam	1.0	

Note 1: All voltages shown are with respect to cathode. Anode and helix are connected internally to the shell. The shell is normally operated at approximate ground potential and the d-c connection is made to the shell of the solenoid.

Note 2: The shell current is the difference between the cathode current and collector current. Since this current, in general, should be minimized, it is desirable to measure the current from shell to ground. It is recommended that overload protection be provided to remove high voltage if the shell current exceeds 3 ma.

Note 3: It is generally desirable to operate the collector at 50 to 100 volts positive with respect to shell, and potential difference between collector and shell should be limited to 300 volts maximum.

Note 4: Forced air cooling of collector is required for average collector power in excess of 10 watts. As the collector power is increased, the air flow required increases. At the maximum collector power of 200 watts, a minimum air flow of 70 cfm through the cooling fins is required.

Note 5: The control electrode voltage is adjusted for maximum beam transmission (collector current/cathode current).

OPERATING PROCEDURE:

(1) Insert tube in solenoid, secure in place with stops provided, make connections.

(2) Turn on cooling air, solenoid voltage (adjust to approximately 1300 gauss), heater voltage, collector voltage (if used), control electrode voltage (approximately -20 volts).

(3) Raise high voltage to desired value, adjusting solenoid voltage and control electrode voltage for maximum collector current, and observing care not to exceed 3 ma shell current. It may be necessary to rotate the tube in the solenoid to the point giving best transmission.

(4) The above procedure is not required after initial set up; however, heater voltage should be applied one minute before applying high voltage, and proper magnetic field and control electrode voltage must be applied before applying high voltage. Observance of the 3 ma maximum limit on shell current is essential to prevent tube damage.

(5) Heater warm up of 2 minutes before applying high voltage is recommended.

Standard solenoids to operate this tube are available, and solenoids designed for particular applications can be supplied.

Additional information for specific applications can be obtained from the

Electron Tube Applications Section
ITT Components Division
Box 7065
ROANOKE, VIRGINIA

TYPICAL CHARACTERISTICS

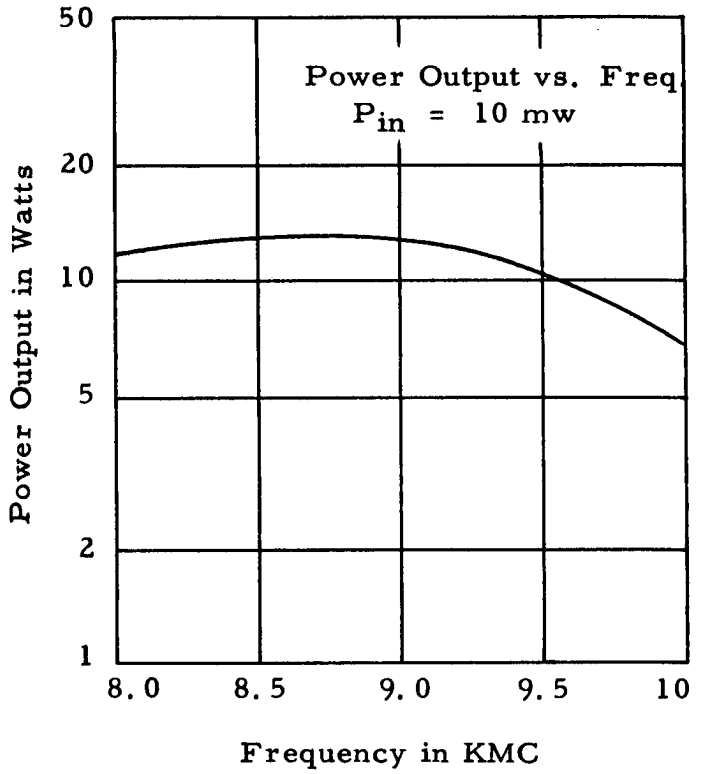

Magnetic field and control electrode voltage set for best transmission.

Voltage set at approximately 3200 volts.

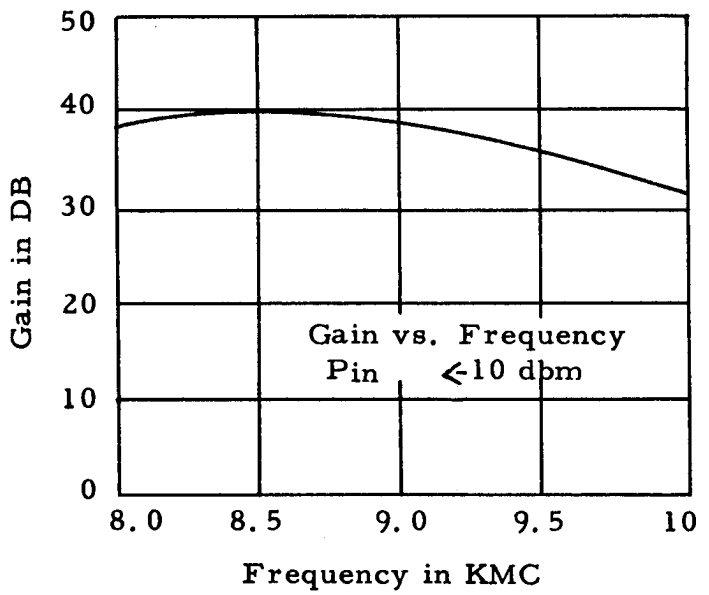

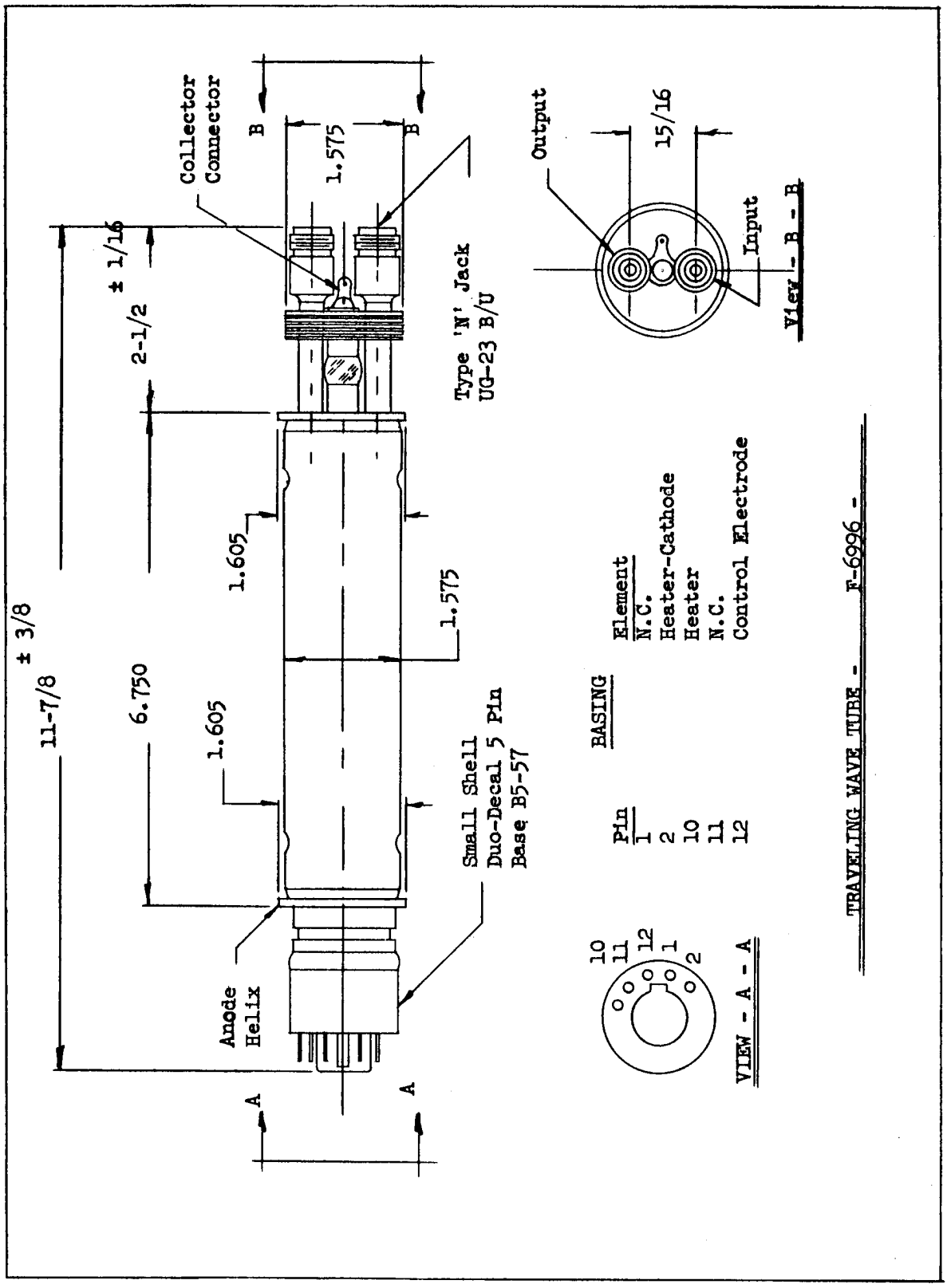
Collector Connector
B
B
1.575
± 1/16
2-1/2
Type 'N' Jack
UG-23 B/U
Output
15/16
Input
View - B - B
± 3/8
11-7/8
6.750
1.605
1.605
1.575
Small Shell
Duo-Decal 5 Pin
Base B5-57
Anode
Helix
A
A
BASING
Pin
Element
1 N.C.
2 Heater-Cathode
10 Heater
11 N.C.
12 Control Electrode
10
11
12
1
2
VIEW - A - A
TRAVELING WAVE TUBE - F-6996 -

engineering TUBE DATA

F-7012
POWER
TRIODE

ITT *Components Division*

DESCRIPTION

The F-7012 is a triode designed for use in high voltage pulse operation. The anode is forced air cooled, capable of dissipating 2.5 kilowatts during Continuous Commercial Service.

ELECTRICAL

Filament Voltage	15 volts
Filament Current	36 amperes
Filament Starting	72 amperes
Amplification Factor	
E_c = -200 v., I_b = .2 amps	25
Direct Inter-electrode Capacitance	
Grid-Plate	14.2 μμf
Grid-Filament	16.3 μμf
Plate-Filament	1.9 μμf

MECHANICAL

Mounting Position			Vertical, Anode Down
Type of Cooling			Forced Air
Anode Air Flow Required			
Plate Dissipation - kilowatts	2.5	2.0	1.5
Air Flow - cfm	150	120	90
Pressure - inches of water	2.5	1.6	.9
Maximum Incoming Air Temperature			45° C.
Maximum Glass Temperature			180° C.
Net Weight Approximate			5-1/2 pounds

MAXIMUM RATINGS AND TYPICAL OPERATING CONDITIONS

R-F Power Amplifier and Oscillator - Pulsed Operation

Maximum Ratings, Absolute Values

D-C Plate Voltage	17.5 kilovolts, max.
D-C Grid Voltage	-5.0 kilovolts, max.
Peak Cathode Current	40 amperes, max.
Duty Cycle	.030 maximum
Plate Dissipation‡	1.2 kilowatts

‡ Air Flow - 75 cfm

ITT COMPONENTS DIVISION
INTERNATIONAL TELEPHONE AND TELEGRAPH CORPORATION
P. O. BOX 412, CLIFTON, NEW JERSEY

Typical Operation

D-C Plate Voltage	15,500 volts
D-C Grid Voltage (during pulse)	-750 volts
D-C Plate Current	0.20 amperes
D-C Grid Current	.013 amperes
Duty Cycle	.023
Power Output, approximate	90 kilowatts

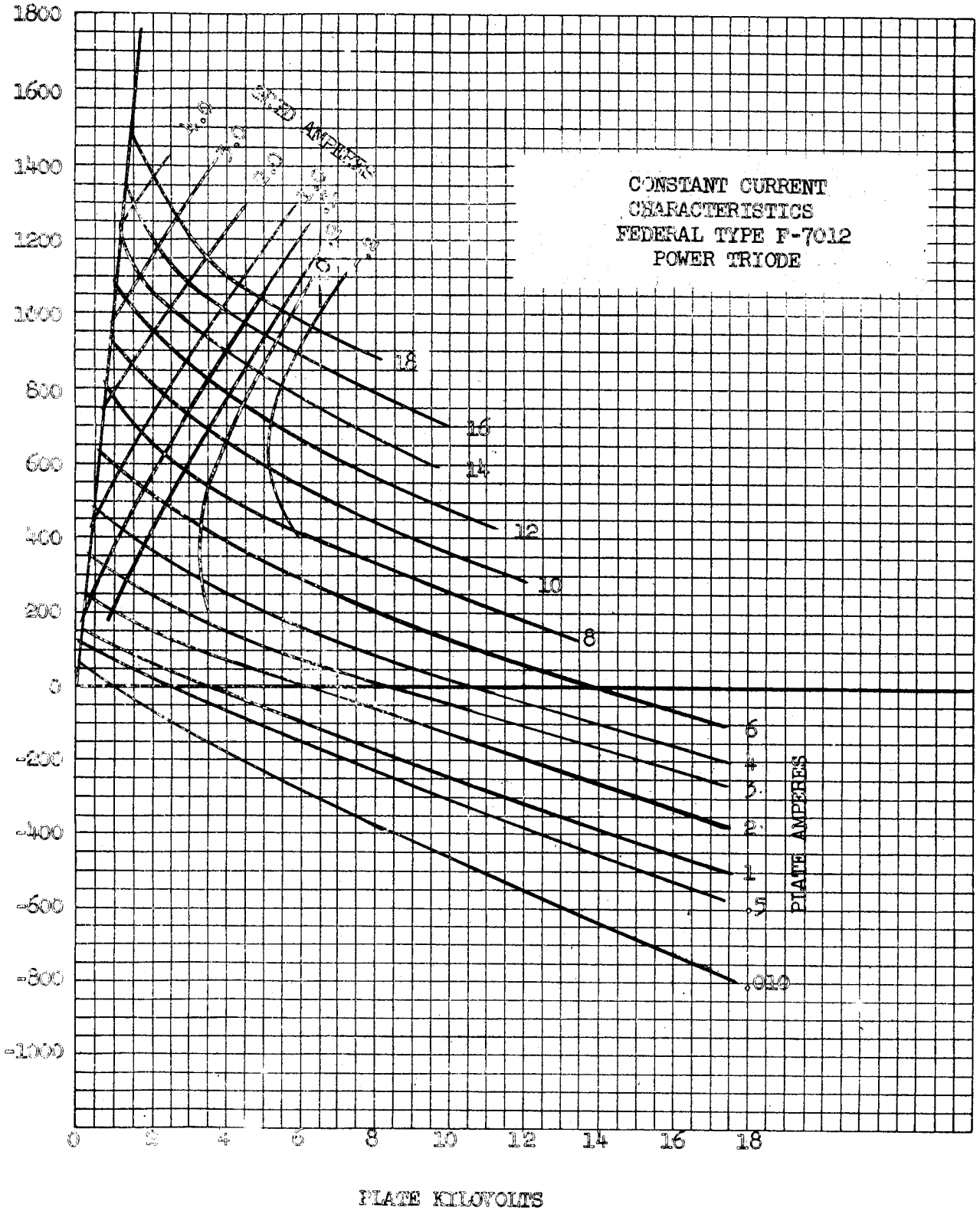

ITT COMPONENTS DIVISION
INTERNATIONAL TELEPHONE AND TELEGRAPH CORPORATION
P. O. BOX 412, CLIFTON, NEW JERSEY

COLOR CODE

Fil. Term. -- Yellow
Fil. C. Term. - Red
Grid ------- Black

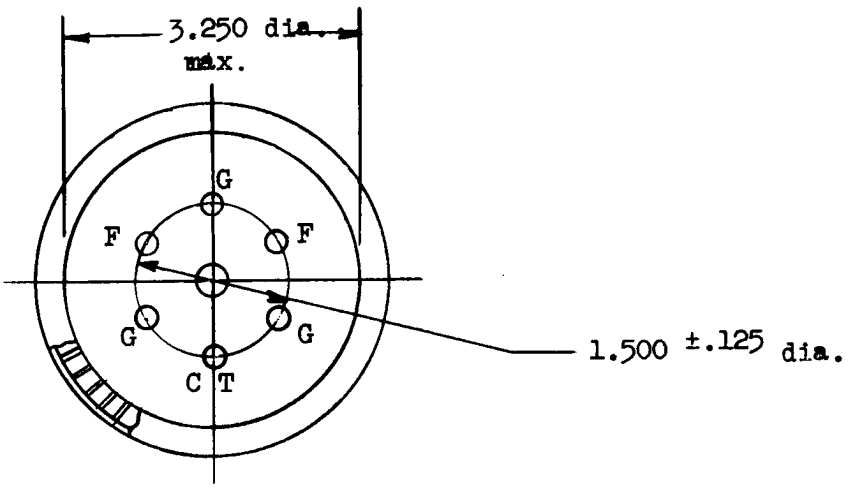

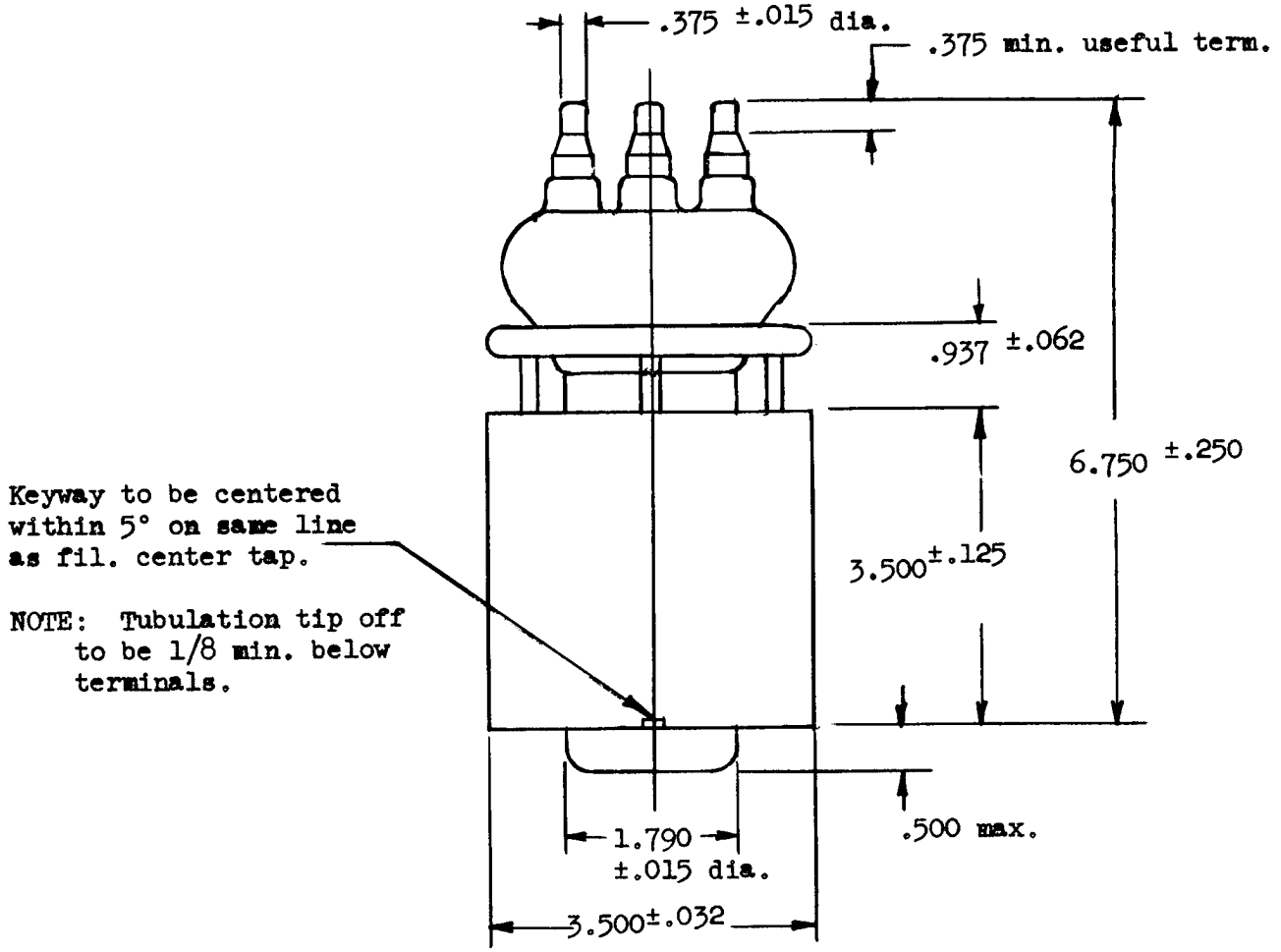

OUTLINE
F-7012 POWER TRIODE

engineering TUBE DATA

F-7030
HIGH VACUUM
POWER DIODE

ITT *Components Division*

Tentative Specification

DESCRIPTION

The F-7030 is a diode designed for rectifier service or in special applications in shunting or charging circuits. The exceptionally rugged construction, free of internal insulators, spring tensioning devices, and fragile elements, makes this type adaptable to a wide range of uses. The anode is forced air cooled and is capable of dissipating 2.5 kilowatts. The cathode is a thoriated tungsten bifilar helix.

ELECTRICAL

Filament Voltage	13 volts
Filament Current	36 amperes
Filament Starting Current	
Full rated filament voltage may be safely applied to the cold filament	
Rectifier Ratings	
Maximum Peak Inverse Voltage	25 kilovolts
Maximum Peak Plate Current	30 amperes
Maximum Average Plate Current	6 amperes
Shunt Diode Ratings	
Maximum Peak Inverse Voltage	25 kilovolts
Maximum Peak Plate Current	*75 amperes
Maximum Average Plate Current	*.7

MECHANICAL

Mounting Position	Vertical, Anode up or down					
Type of Cooling	Forced Air					
Anode Air Flow Required						
Plate Dissipation - kilowatts	2.5	2.0	1.5	1.0	0.5	
Air Flow - cfm	150	120	90	65	50	
Pressure - inches of water	2.5	1.6	.9	.65	.5	
Maximum Incoming Air Temperature					45	°C
Maximum Glass Temperature					180	°C

*Maximum peak plate current and maximum average plate current of 75 and .7 amperes respectively are rated under conditions of filament excitation voltage of 13.75 volts.

ITT COMPONENTS DIVISION
INTERNATIONAL TELEPHONE AND TELEGRAPH CORPORATION
P. O. BOX 412, CLIFTON, NEW JERSEY

TYPE F-7030 POWER DIODE
PLATE CHARACTERISTICS

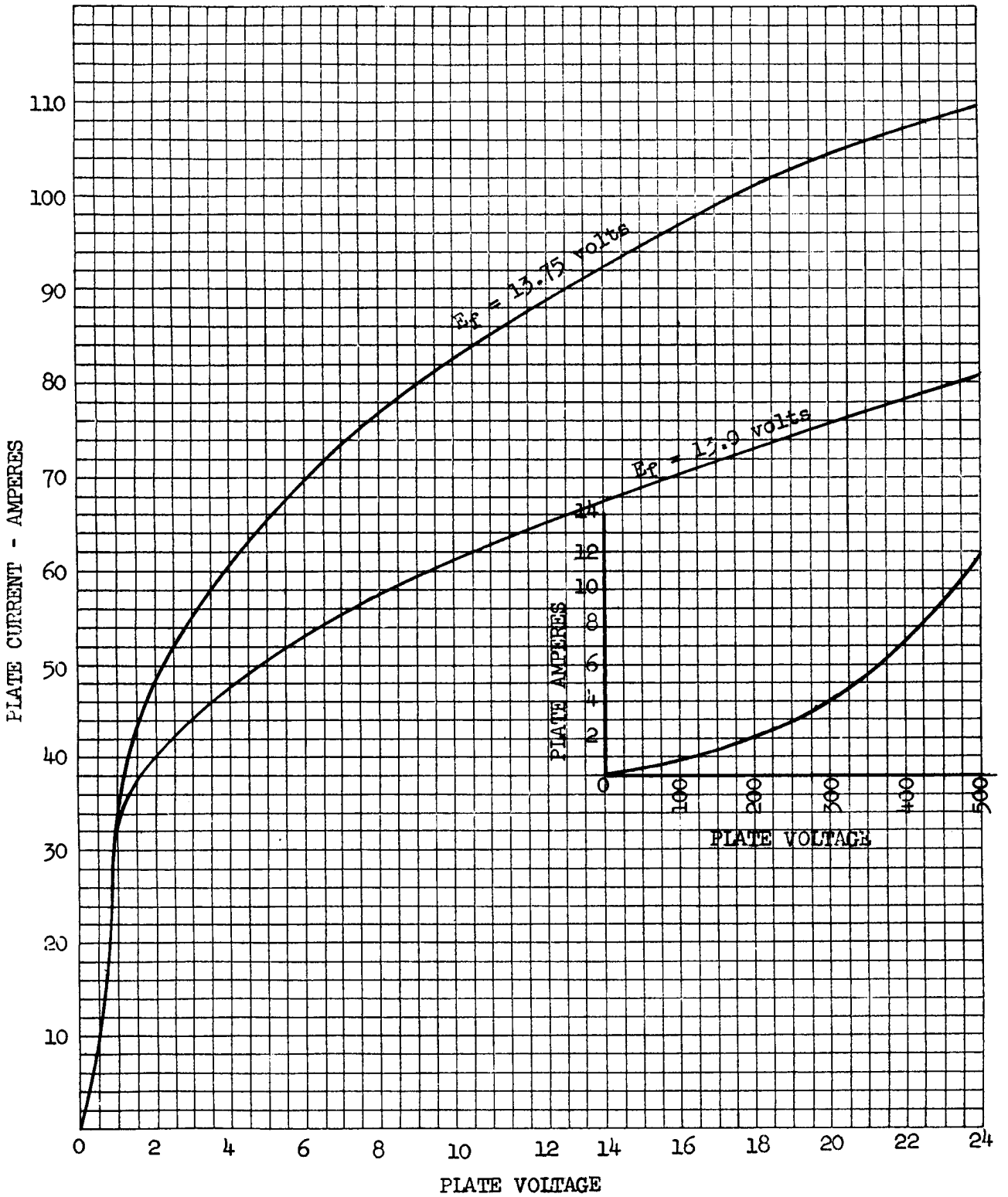

COLOR CODE

FIL. TERM. ---- YELLOW
FIL. C. TERM. - RED

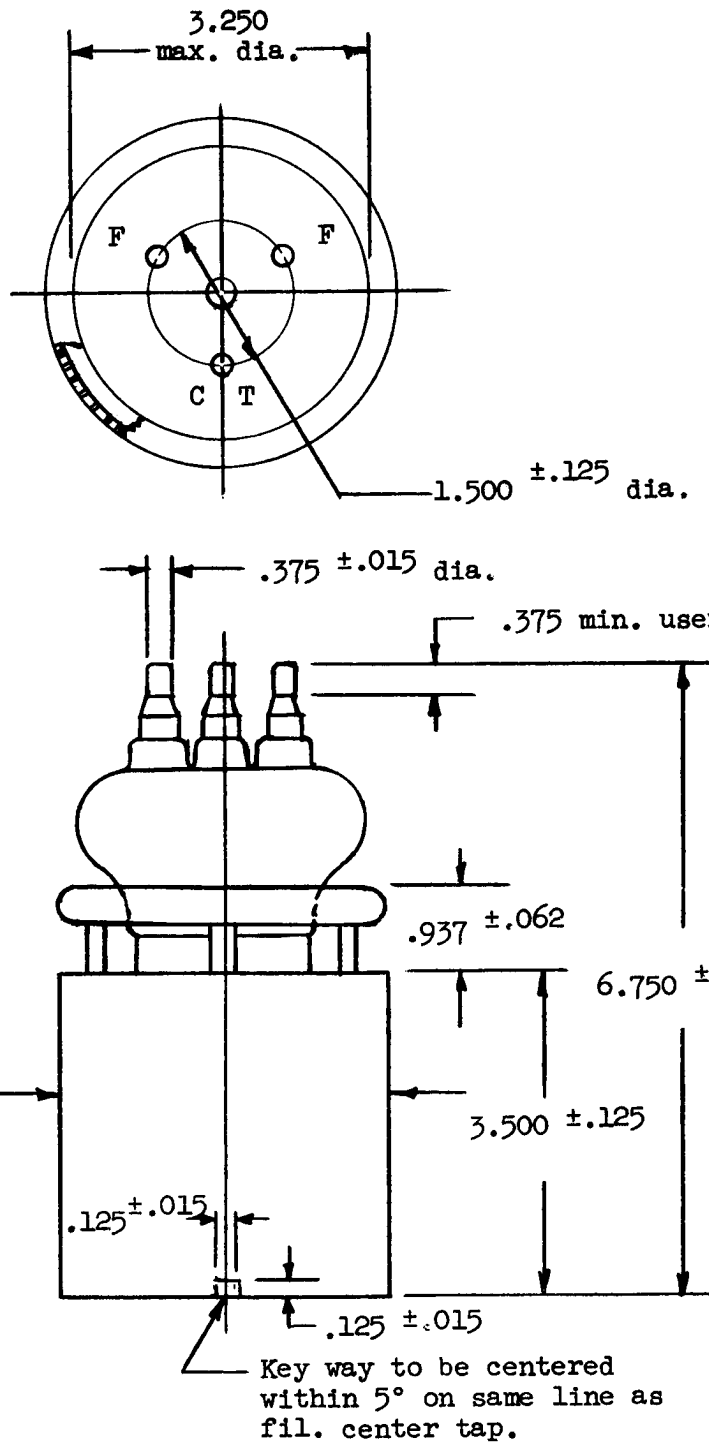

OUTLINE
F-7030 POWER DIODE

ITT COMPONENTS DIVISION
INTERNATIONAL TELEPHONE AND TELEGRAPH CORPORATION
P. O. BOX 412, CLIFTON, NEW JERSEY

TENTATIVE

DESCRIPTION

The F-7066 is a 50 mw CW traveling wave amplifier tube having 30 db gain and 8.0 to 12.0 kmc frequency range. It is constructed in a rugged metal envelope with a helix type slow wave structure. The integral matching circuit is in 50 ohm coaxial line and is provided with female TNC connectors. The tube is self-aligning in the external solenoid which is required to provide a uniform magnetic field. A convergent beam gun and oxide coated cathode are used. The tube is suitable for either CW or pulse service.

ELECTRICAL RATINGS, ABSOLUTE VALUES

Heater Voltage	6.3 (±5%)	volts
Heater Current	0.85	ampere
Maximum Anode Voltage (Note 1)	1600	volts
Maximum Helix Current (Note 2)	2	ma
Maximum Collector Dissipation (Beam Power)	15	watts
Maximum Control Electrode Voltage (Note 3)	-500	volts

ELECTRICAL INFORMATION:

Maximum Frequency	12.0	kmc
Minimum Frequency	8.0	kmc
Minimum Cold Transmission Loss	50	db
Capacitance		
Control Electrode to All Elements	10	μμf (max.)

MECHANICAL:

Type of Cathode	Oxide Coated	Unipotential
Gun Connections		Flying Leads
R-F Connections		Female TNC
Magnetic Field Strength (nominal)	900	gauss
Mounting Position		Any
Weight (tube only)	1	pound
Type of Cooling	Conduction to	Solenoid

TYPICAL OPERATION:

Anode Voltage	1500	volts
Anode Current	5	ma
Helix Current	0.5	ma
Control Electrode Voltage (Note 4)	-15	volts
Power Output	50	mw, nominal
Gain	30	db, nominal
Duty Cycle (Note 4)		
R-F	Variable to 1.0	
Beam	1.0	

Note 1: All voltages shown are with respect to cathode. Anode and collector are connected internally to the shell, and the outer coax conductor of the r-f connections is also at shell potential. The helix is connected to the center conductor of the coax line and a d-c connection to the helix must be provided externally in the r-f circuitry.

Note 2: The helix current should, in general, be minimized and must be less than the maximum rating. The control electrode voltage and magnetic field (solenoid current) can be properly adjusted before connection of r-f cables by monitoring current to the center coax conductor. It is desirable, when possible, to monitor this current during operation and to provide overload protection. In pulsed beam operation, the peak helix current may exceed 2 ma, but care should be taken to operate at reasonably low values and average current must not exceed 2 ma.

Note 3: The control electrode voltage is adjusted for best transmission for CW operation (normally about -15 volts). Beam gate off can be accomplished by applying voltage of -400 to -500 volts. Operation in the region of control electrode voltage between approximately -15 volts and -400 volts can be utilized with the control electrodes used as a gain control.

Note 4: Gated beam operation can also be utilized by applying -400 to -500 volts to the control electrode for gate off and approximately -15 volts (this value adjusted for best transmission) for gate on. In this type of operation, the values of power output, anode current and helix current become peak values.

Additional information for specific applications can be obtained from the

Electron Tube Applications Section
ITT Components Division
Box 412 - Clifton, New Jersey

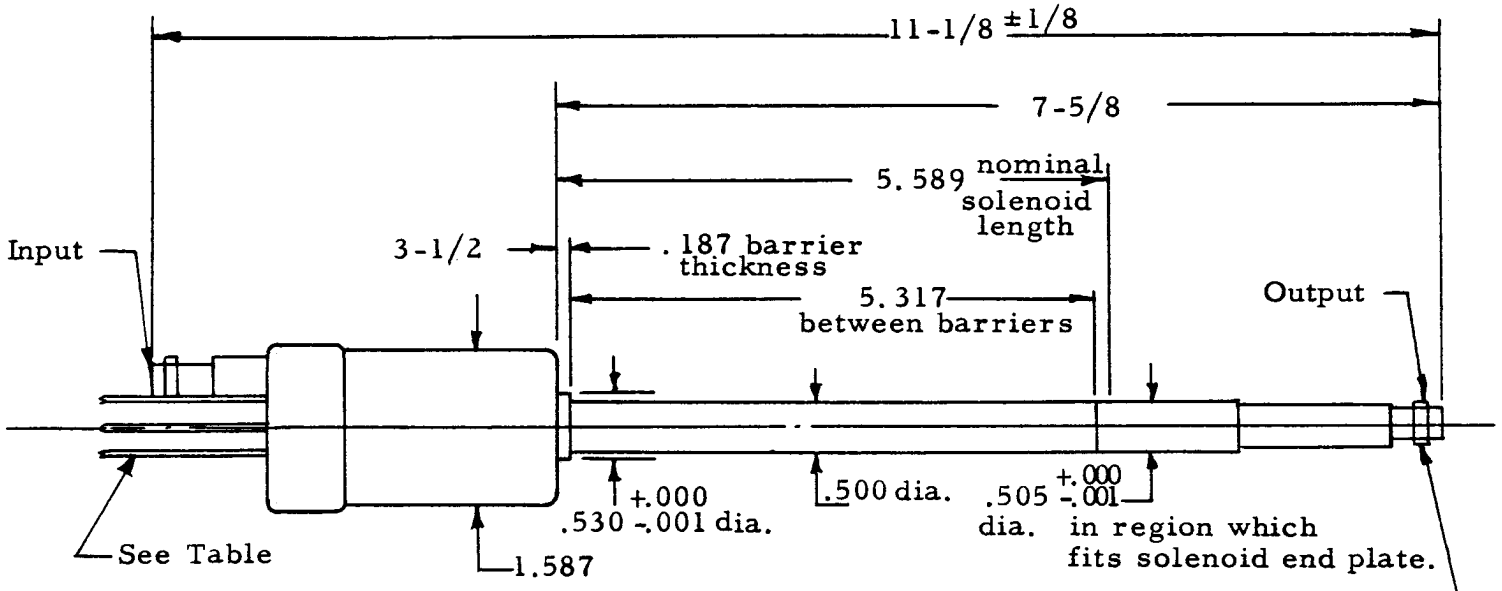

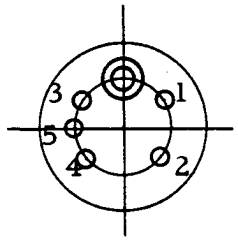

Pin	Color Code	Connections
1	Green	Focus
2	Brown	Heater
3	Yellow	Cathode
4	Black	Anode
5	Brown	Heater

Flexible Leads, 12" min. length

OUTLINE - F-7066 TRAVELING WAVE TUBE

OPERATING INSTRUCTIONS FOR THE F-7066 TRAVELING WAVE TUBE

THE F-7066 IS A 50 MILLIWATT CW TRAVELING WAVE TUBE OPERATING OVER THE BAND OF 8.0 TO 12.0 KMC. IT REQUIRES A MAGNETIC FIELD OF 900 GAUSS FOR PROPER FOCUSING. BASIC POWER REQUIREMENTS ARE 10 MA AT 1500 V AND A 50 VOLT BIAS SUPPLY, AS WELL AS 6.3 VOLTS AT 1.0 AMPERE FOR THE HEATER.

WHEN PLACING THE F-7066 IN OPERATION FOR THE FIRST TIME, THE FOLLOWING PROCEDURE SHOULD BE FOLLOWED:

1. MAKE A VISUAL INSPECTION OF THE TUBE TO CHECK FOR LOOSE CONNECTIONS OR OTHER MECHANICAL DEFECTS.

2. PLACE THE TUBE IN THE PROPER SOLENOID AND MAKE CONNECTIONS TO THE TUBE AND SOLENOID. OBSERVE COLOR-CODING OF THE TUBE LEADS AND POLARITY MARKING ON THE SOLENOID.

3. APPLY COOLING TO THE SOLENOID.

4. APPLY THE FOLLOWING VOLTAGES IN THE FOLLOWING ORDER:

   4.1 HEATER VOLTAGE (6.3 VOLTS).

   4.2 SOLENOID VOLTAGE (ADJUST SOLENOID CURRENT TO YIELD 900 GAUSS).

   4.3 CONTROL ELECTRODE VOLTAGE (APPLY BIAS VOLTAGE SPECIFIED ON DATA SHEET SUPPLIED WITH TUBE.)

   4.4 CATHODE VOLTAGE (ADJUST SLOWLY TO THE VALUE INDICATED ON THE DATA SHEET; USUALLY ABOUT MINUS 1400 VOLTS WITH RESPECT TO THE SHELL. AT ALL TIMES MONITOR HELIX CURRENT AND OBSERVE THE 2.0 MA MAXIMUM LIMIT.)

5. R.F. INPUT SHOULD BE LIMITED TO 10 MW.

6. THE CATHODE VOLTAGE MAY BE OPTIMIZED FOR OPTIMUM POWER OUTPUT AT THE DESIRED FREQUENCIES.

THE FOLLOWING PRECAUTIONS SHOULD BE TAKEN WHEN OPERATING THE TRAVELING WAVE TUBE:

1. NEVER OPERATE THE F-7066 WITHOUT PROPER MAGNETIC FIELD. BE SURE SUFFICIENT COOLING IS SUPPLIED TO TUBE AND SOLENOID.

2. NEVER OPERATE THE F-7066 WITH HELIX CURRENT IN EXCESS OF 2.0 MA. UNDER MOST CONDITIONS HELIX CURRENT WILL BE 1.0 MA OR LESS. IT IS IMPORTANT THAT HELIX OVERLOAD PROTECTION BE PROVIDED.

3. BE SURE COAXIAL CABLES TO BE CONNECTED TO THE TUBE INPUT AND OUTPUT CONNECTORS ARE ASSEMBLED CORRECTLY. IF THE INNER CONDUCTOR OF THE CABLE CONNECTOR IS TOO LONG, PRESSURE WILL BE APPLIED TO A CERAMIC BEAD, WHICH MAY CAUSE DAMAGE TO THE TUBE. IF IT IS TOO SHORT, A POOR CONNECTION WILL RESULT CAUSING POOR R.F. PERFORMANCE.

THE ATTACHED SCHEMATIC IS A SUGGESTED METHOD OF CONNECTING THE F-7066 AND SHOWS THE LOCATION OF PROTECTION CIRCUITS AND METER POLARITY.

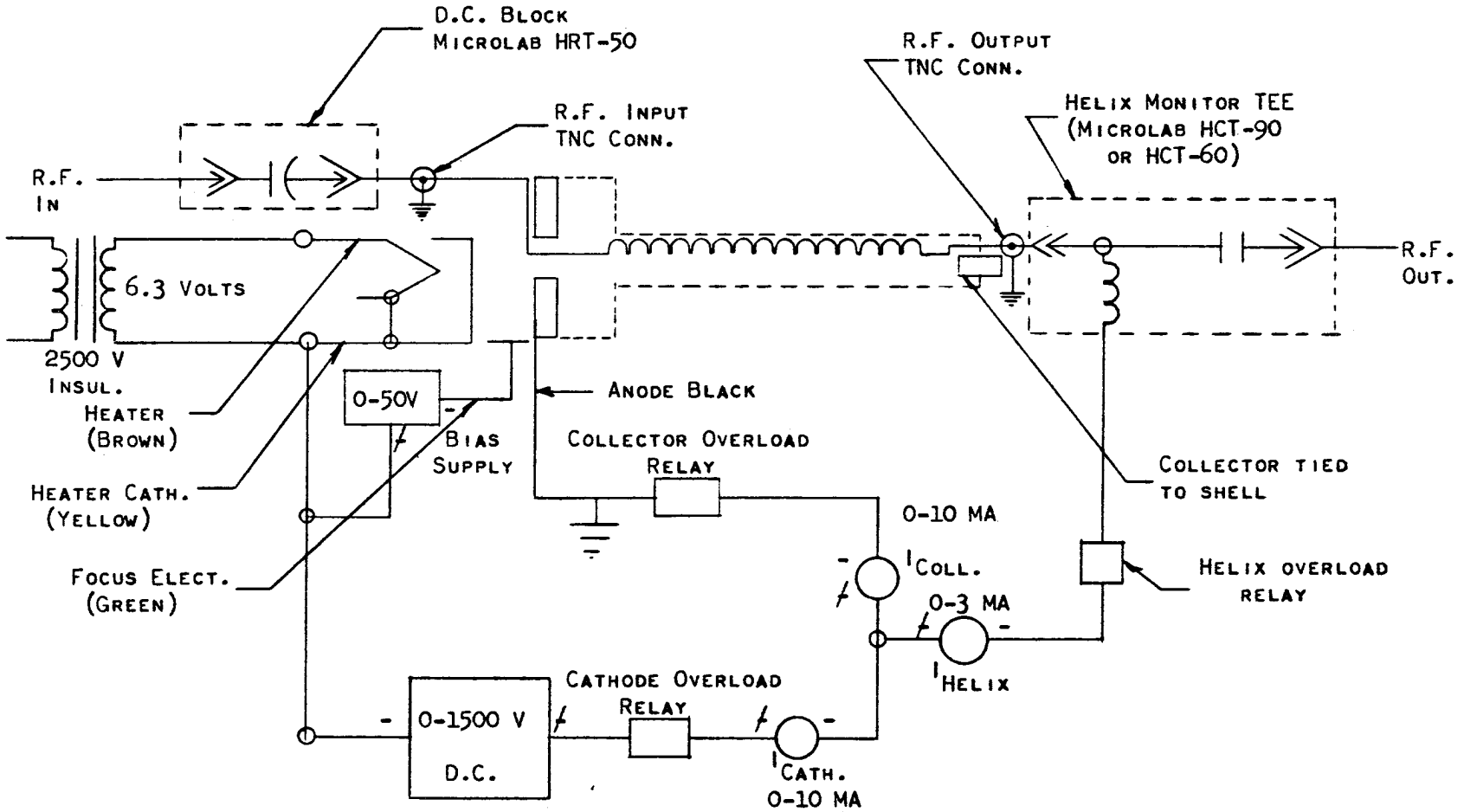

Notes:

1. All overloads operate to disconnect high voltage supply.
2. Helix monitor and D.C. block to be supplied by user.

Basic Supply and Metering Requirements for F-7066 TWT Amplifier

TENTATIVE

DESCRIPTION:

The F-7067 is a 1 watt pulse traveling wave amplifier tube having 30 db gain and 8.0 to 12.0 kmc frequency range. It is constructed in a rugged metal envelope with a helix type slow wave structure. The integral matching circuit is in 50 ohm coaxial line and is provided with female TNC connectors. The tube is self-aligning in the external solenoid which is required to provide a uniform magnetic field. A convergent beam gun and oxide impregnated cathode are used. The tube is for pulse service, at a maximum duty cycle of .04. A grid suitable for pulsing is provided.

ELECTRICAL RATINGS, ABSOLUTE VALUES:

Heater Voltage	6.3 (±10%)	volts
Heater Current	2.3	amperes
Maximum Anode Voltage (Note 1)	4500	volts
Maximum Helix Current (Note 2)	15	ma peak
Maximum Collector Dissipation (beam power)	10	watts
Maximum Grid Voltage (Note 3)		
Positive	+100	volts
Negative	-100	volts

ELECTRICAL INFORMATION:

Maximum Frequency	12.0	kmc
Minimum Frequency	8.0	kmc
Minimum Cold Transmission Loss	50	db
Capacitance		
Control Electrode to all elements	15	μμf max.

MECHANICAL INFORMATION:

Type of Cathode	Oxide Impregnated Unipotential
Gun Connections	Flying Leads
R-F Connections	Female TNC Connectors
Magnetic Field Strength (nominal)	1200 gauss
Mounting Position	Any
Weight (tube only)	1 pound
Type of Cooling	Conduction to Solenoid

TYPICAL OPERATION:

Anode Voltage	3600 volts
Anode Current	50 ma peak
Helix Current	5 ma peak
Grid Voltage	
Bias	-10 volts
Applied Voltage Pulse	120 volts peak
Power Output (nominal) (Note 4)	1 watts peak
Gain (nominal)	30 db
Duty Cycle	.01

Note 1: All voltages shown are with respect to cathode. Anode and collector are connected internally to the shell, and the outer coaxial conductor of the r-f connections is also at shell potential. The helix is connected to the center conductor of the coaxial line and a d-c connection to the helix must be provided externally in the r-f circuitry.

Note 2: Initial adjustments of voltage and magnetic field may be made at low duty cycles. 5 ma helix current must not be exceeded at maximum duty cycle (.04).

Note 3: Positive voltage must not be applied to the grid in the absence of anode voltage.

Note 4: 2 watts power output at 30 db gain can be obtained from 8.0 to 11.0 kmc.

Additional information for specific applications can be obtained from the

Electron Tube Applications Section
ITT Components Division
P.O. Box 412
Clifton, New Jersey

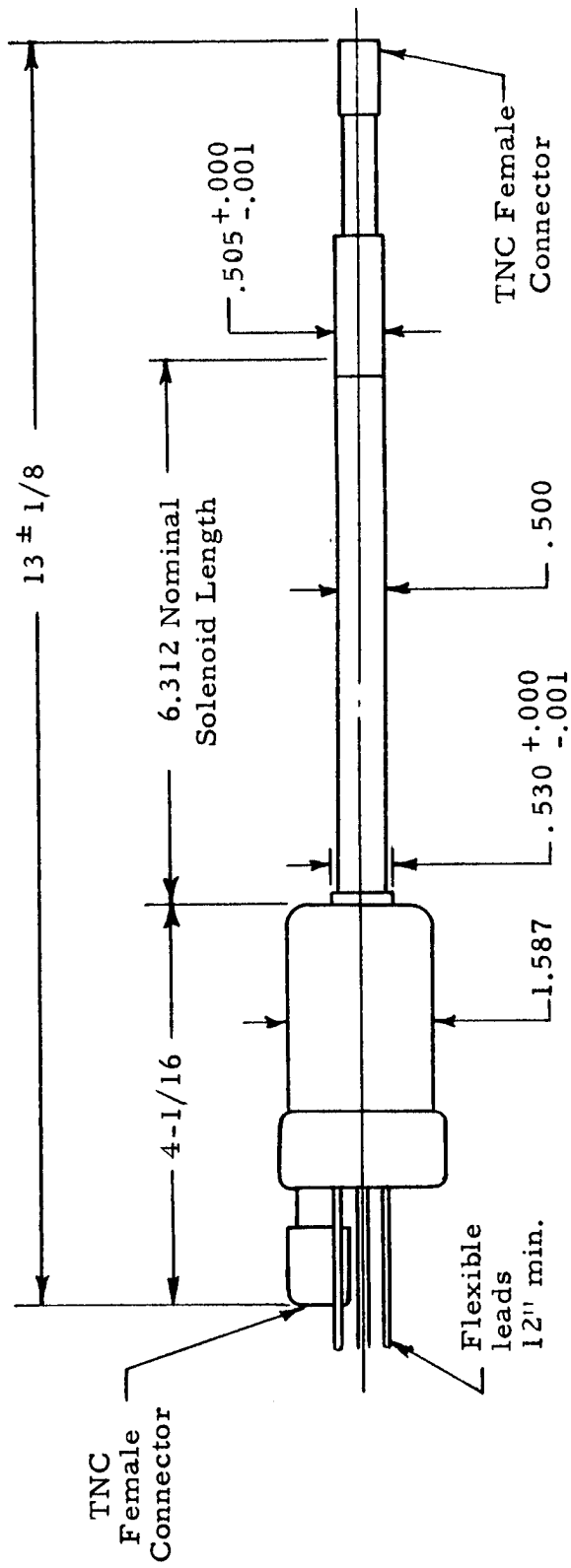

LEAD NO.	LEAD COLOR	CONNECTION
1	Green	Grid
2	Brown	Heater
3	Yellow	Heater-Cathode

OUTLINE - F-7067 TRAVELING WAVE TUBE

DESCRIPTION

The F-7100 is a diode designed for rectifier service or in special applications in shunting or charging circuits. The exceptionally rugged construction, free of internal insulators, spring tensioning devices, and fragile elements, make this type adaptable to a wide range of uses. The anode is forced air cooled and is capable of dissipating 3.5 kilowatts. The cathode is a thoriated tungsten bifilar helix.

ELECTRICAL

Filament Voltage			15	volts
Filament Current			36	amperes
Filament Starting Current Full rated filament voltage may be safely applied to the cold filament				
Maximum Ratings	Shunt	Charging	Rectifier	
Max. Peak Inverse Voltage - kv	30	30	30	
Max. Peak Plate Current - amps	100	7.5 rms	20	
Max. Plate Current - amps	-	-	6	avg.

MECHANICAL

Mounting Position		Vertical, anode up or down		
Type of Cooling		Forced Air		
Anode Air Flow Required				
Plate Dissipation - kw	3.5	2.8	2.4	
Air Flow - cfm	190	125	75	
Pressure - inches of water	1.6	.78	.35	
Max. Incoming Air Temperature			45	°C
Max. Glass & Seal Temperature			180	°C
Net Weight, approximate			7	lbs.

Additional information for specific applications can be obtained from:

Electron Tube Applications Section
ITT Components Division
P.O. Box 412
Clifton, New Jersey

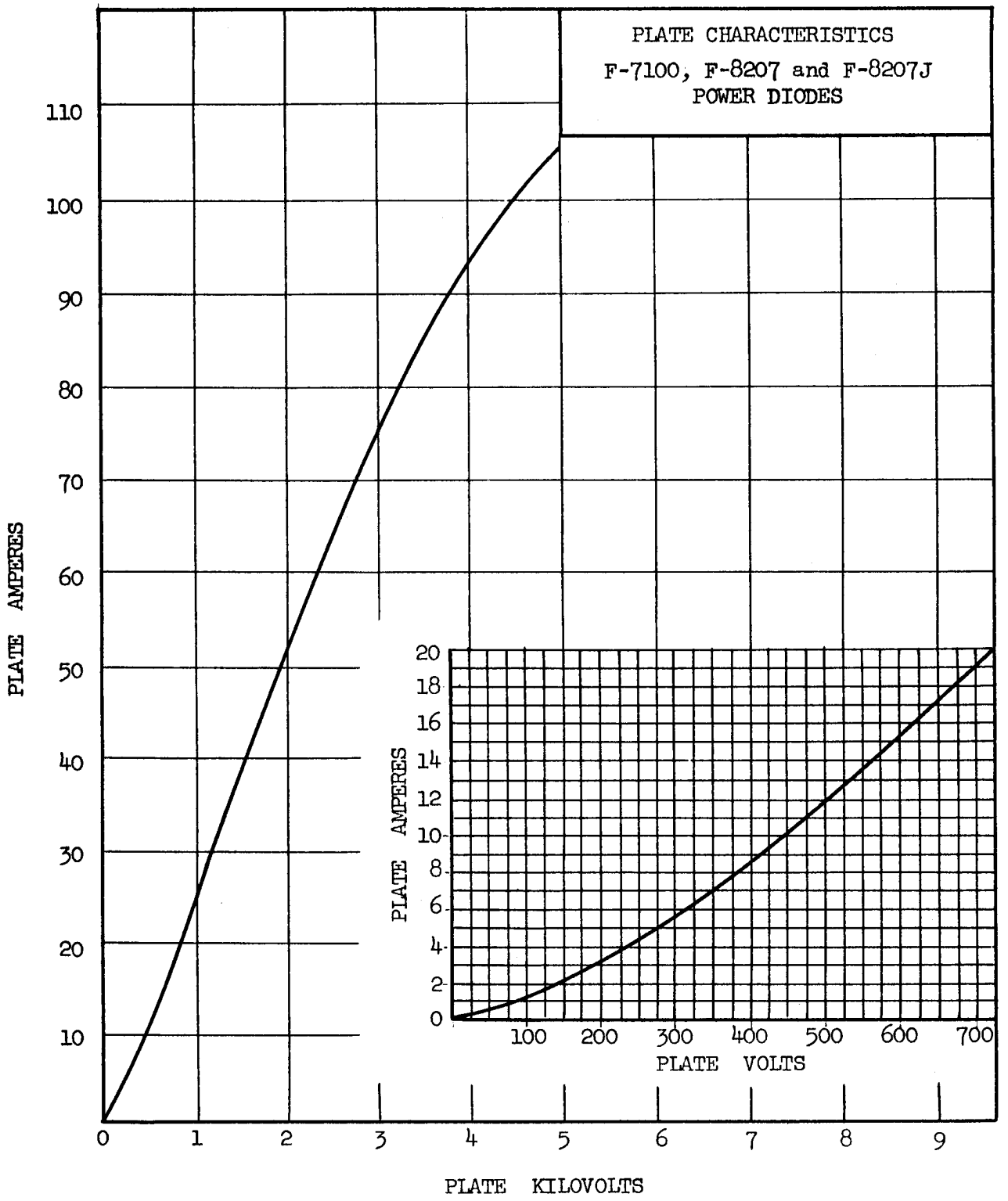
PLATE CHARACTERISTICS
F-7100, F-8207 and F-8207J
POWER DIODES
PLATE AMPERES
110
100
90
80
70
60
50
40
30
20
10
0
1
2
3
4
5
6
7
8
9
PLATE KILOVOLTS
PLATE AMPERES
20
18
16
14
12
10
8
6
4
2
0
100
200
300
400
500
600
700
PLATE VOLTS

3-62

Color Code

Fil. Terminal - Yellow
Fil. C. Term. - Red

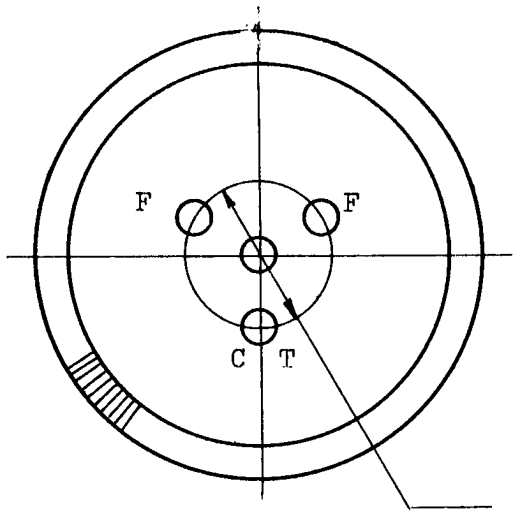

Tubulation tip-off to be 1/8" min. below terminals

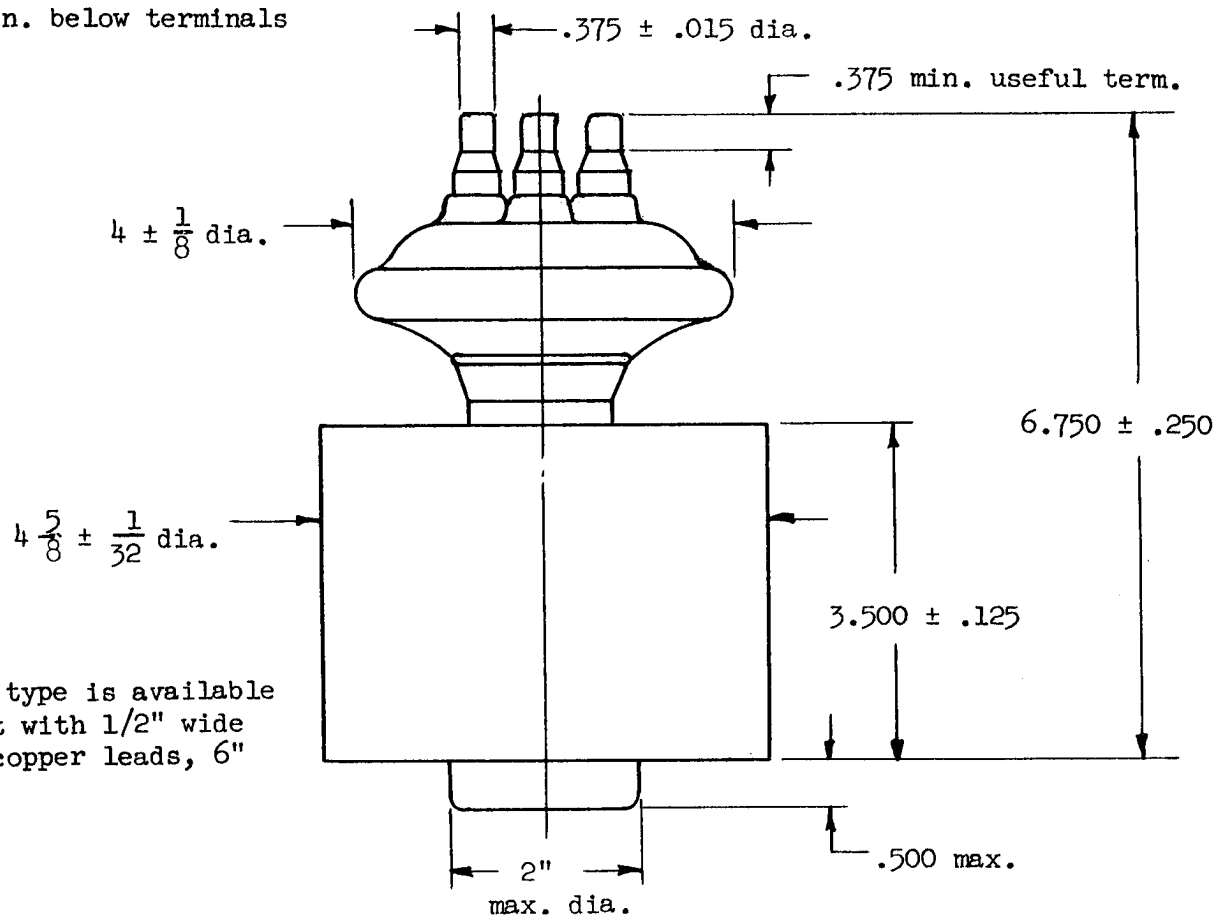

This tube type is available on request with 1/2" wide flexible copper leads, 6" long.

ACCESSORIES
Air Jacket - RT-54887 Type II

OUTLINE
F-7100 POWER DIODE

ELECTRON TUBE DEPARTMENT ■ COMPONENTS DIVISION
INTERNATIONAL TELEPHONE AND TELEGRAPH CORPORATION, CLIFTON, NEW JERSEY

DESCRIPTION:

THE F-7172 IS A 2-1/2 INCH IATRON (DIRECT VIEW STORAGE CATHODE-RAY TUBE) THAT PRODUCES A BRIGHT VISUAL DISPLAY OF ELECTRICALLY STORED INFORMATION. IT IS ELECTROSTATICALLY FOCUSED AND DEFLECTED. IT INCORPORATES A CATHODE-RAY GUN FOR ELECTRICAL SIGNAL INPUT, AN INSULATOR MESH FOR BEAM CHARGE STORAGE, A FLOODING GUN FOR VIEWING AND ERASING, AND AN ALUMINIZED PHOSPHOR VIEWING SCREEN FOR VISUAL OUTPUT. THE LARGE UNDEFLECTED FLOODING BEAM CONTINUOUSLY EXCITES THE 1-7/8 INCH VIEWING SCREEN THROUGH THE INSULATOR MESH AND IS MODULATED IN CROSS-SECTION BY THE STORED SIGNAL CHARGE PATTERN.

SPECIAL FEATURES OF THIS TUBE ARE BRIGHT DAYLIGHT VIEWING OF ELECTRICAL SIGNALS BY IMAGE AMPLIFICATION AND THE ABILITY TO WRITE, STORE, AND ERASE SUCH INFORMATION AT WILL.

USED AS A PANEL-MOUNTED INDICATOR IN AIRCRAFT, ITS FAST WRITING AND HIGH DEFLECTION SPEED PERMITS ACCURATE AND INSTANTANEOUS PRESENTATION OF ELECTRICAL INFORMATION. SINCE COAXIAL ELECTRON GUNS ARE USED IN THE TUBE, THERE IS NO TRAPEZOIDAL DISTORTION OF THE SCANNING PATTERN, AND THE SYMMETRICAL ENVELOPE OCCUPIES MINIMUM SPACE.

DEFLECTION CIRCUITS WITH ADEQUATE POWER TO DEFLECT THE TUBE CAN BE INCLUDED IN THE SPACE BETWEEN THE TUBE NECK AND INDICATOR CASE, AND CONNECTIONS TO THE DEFLECTING ELECTRODES ARE CONVENIENTLY LOCATED IN THE SHOULDER STEM.

ALTHOUGH THE OVER-ALL OPERATING VOLTAGE IS ONLY 4500 VOLTS, SIGNALS ARE DISPLAYED AT A BRIGHTNESS OF 1500 FOOT-LAMBERTS, AND A DISPLAY OF RANDOM DOTS NOT PERCEPTIBLE WITH A CONVENTIONAL CATHODE-RAY TUBE, OR OCCURING WHILE THE OPERATOR'S ATTENTION IS DIVERTED, CAN BE STORED AND VIEWED FOR PERIODS UP TO 30 SECONDS.

* TRADEMARK OF THE INTERNATIONAL TELEPHONE AND TELEGRAPH CORPORATION

GENERAL:

	Writing Section	Flooding Section	
Heater			
Voltage (ac or dc)	6.3	6.3	Volts
Current	0.6	1.2	Amperes
Direct Interelectrode Capacitances (approx. without external shield)			
Grid #1 to all other Electrodes	4.2		uuf
Cathode to all other Electrodes	0.5		uuf
Deflecting Electrode D1 to D2 Front	3.7		uuf
Deflecting Electrode D3 and D4 Rear	3.3		uuf
D1 to all other Electrodes	4.75		uuf
D2 to all other Electrodes	4.0		uuf
D3 to all other Electrodes	5.0		uuf
D4 to all other Electrodes	4.5		uuf
Focusing method	Electrostatic	Electrostatic	
Deflection Method	Electrostatic	None	
Deflection Sensitivity			
D_1 D_2	36		Volts/inch
D_3 D_4	34		Volts/inch
Phosphor	High-Visual-Efficiency Type (aluminized)		
Fluorescence	Yellow-Green		
Minimum Useful Screen Diameter	1-7/8		Inches
Maximum over-all Length	9-11/16		Inches
Maximum Bulb Diameter	2-3/4		Inches
Maximum Neck Diameter	1-7/16		Inches
Base (neck)	Special 9-Pin		
Shoulder Terminals	Special 8-Pin		
Bulb Terminals	1 Flexible Lead (High Voltage)		
	1 - 7-Pin E7-1 Miniature Base		

* Trademark of ITT

MAXIMUM RATINGS:

	Writing Section	Flooding Section	
Screen Voltage		5000	Volts
Backing Electrode Voltage (Peak)		25	Volts
Collector Voltage		200	Volts
Anode #4 Voltage		100	Volts
Anode #3 (Collimating Electrode) Voltage		50	Volts
Anode #2 (Collimating Electrode) Voltage		50	Volts
Anode #1 Voltage		20	Volts
Grid #3 (Focusing Electrode) Voltage	300**		Volts
Grid #2 Voltage	1100**		Volts
Grid #1 Voltage	**0 to 100		Volts
Cathode Voltage	-1000	0 Reference	Volts
Peak Voltage Between Grid #2 and any Deflecting Electrode	200		Volts
Peak Heater-Cathode Voltage			Volts
Heater Negative with Respect to Cathode	125	125	Volts
Heater Positive with Respect to Cathode	10	10	Volts

OPERATING VALUES AND TYPICAL PERFORMANCE CHARACTERISTICS:

	Writing Section	Flooding Section	
Screen Voltage		4000	Volts
Screen Current (maximum)		0.75	MA
Backing Electrode			
Voltage (DC)		10	Volts
Voltage (pulse)		10	Volts
Collector Voltage		150	Volts
Anode #4 Voltage		75	Volts
Anode #3 Voltage (Adjust for Collimation)		12	Volts
Anode #2 Voltage (Adjust for Collimation)		15	Volts
Anode #1 Voltage		15	Volts
Grid #3 (Adjust for Focus) Voltage	-300 to -325		Volts
Grid #2 Voltage	0		Volts
Grid #1 Voltage	-495		Volts

(Continued)

** All voltages are with reference to the flooding gun cathode except those marked by an asterisk indicating reference to the writing gun cathode potential.

* Trademark of ITT

	Writing Section	Flooding Section	
Deflecting Electrodes			
Voltage (peak to peak)	45		Volts
Voltage (average)	0		Volts
Current (Note 1)	0.5 (max.)		Volts
Cathode Voltage	-450	0 Reference	Volts
Cathode Current		16	ma

RANGE OF OPERATING ADJUSTMENTS:

	Writing Section	Flooding Section	
Backing-Electrode Erasing Voltage Pulses (Note 2)			
Voltages		3 - 10	Volts
Frequency		5000 - 50	pps
Anode #3 Voltage (Note 3)		10 - 20	Volts
Anode #2 Voltage (Note 3)		10 - 20	Volts
Grid #3 Voltage	75 percent ± 5 percent of cathode voltage		
Grid #1 Bias Voltage	3 percent ± 2 percent of cathode voltage		

PERFORMANCE CHARACTERISTICS:

Writing Time (Note 4)	2×10^{-6}	Second
Erasing Time (Note 5)	0.003	Second
Viewing Time (Note 6)	30	Seconds
Stored Spot Size (Note 7)	0.040	Inches
Brightness (Note 8)	1500	Foot-Lamberts

NOTES:

1. Deflecting electrodes intercept flooding beam current reflected at the storage surface. The deflection circuits should therefore have low output resistance.

2. The specified range of pulse frequencies adjusts the viewing time from about 1 to 40 seconds using 0.5 microsecond pulses. The pulse amplitude adjusts the potential level to which the storage surface is erased.

* Trademark of ITT

3. ANODE VOLTAGE ADJUSTMENTS ARE NECESSARY TO ADJUST COLLIMATION AND SPOT SIZE OF THE FLOODING BEAM.

4. THE TIME REQUIRED USING MAXIMUM WRITING BEAM CURRENT AND A FOCUSED STATIONARY BEAM TO WRITE A SPOT TO 90 PERCENT OF MAXIMUM BRIGHTNESS.

5. THE SHORTEST TIME TO REDUCE THE OUTPUT BRIGHTNESS FROM MAXIMUM BRIGHTNESS TO CUTOFF BY ERASING.

6. THE LONGEST TIME DURING WHICH INFORMATION WRITTEN JUST TO THE MAXIMUM BRIGHTNESS LEVEL IN THE USEFUL VIEWING AREA IS STILL VISIBLE UNDER THE CONDITION THAT ERASING PULSES ARE APPLIED CONTINUOUSLY TO THE TUBE.

7. THE DIAMETER MEASURED WITH A MICROSCOPE OF THE DISPLAY OF A STORED SPOT WRITTEN WITH A FOCUSED STATIONARY BEAM TO A BRIGHTNESS OF 90 PERCENT OF MAXIMUM BRIGHTNESS.

8. THE AVERAGE BRIGHTNESS OF THE USEFUL SCREEN AREA WRITTEN TO MAXIMUM BRIGHTNESS USING SPECIFIED TYPICAL OPERATING VOLTAGES.

SPECIAL PRECAUTIONS:

OBSERVE MAXIMUM RATINGS TO AVOID POSSIBLE DAMAGE TO THE TUBE. IN PARTICULAR, THE VIEWING-SCREEN VOLTAGE SHOULD BE LIMITED SO AS NEVER TO EXCEED 6 KILOVOLTS.

THE FULL VOLTAGE SHOULD NOT BE APPLIED TO THE VIEWING SCREEN INSTANTANEOUSLY. AN ORDINARY R-C FILTER AT THE OUTPUT OF THE POWER SUPPLY PROVIDES ADEQUATE ASSURANCE THAT THE VOLTAGE BUILD-UP WILL NOT BE TOO ABRUPT. THE MINIMUM RESISTANCE OF THE HIGH-VOLTAGE LEAD SHOULD BE 1 MEGOHM.

REPEATED BOMBARDMENT WITH A HIGH-CURRENT FOCUSED WRITING BEAM ON A SMALL AREA OF THE STORAGE SURFACE CAN BURN A DARK IMAGE INTO THE DISPLAY WHICH MAY REMAIN FOR SEVERAL HOURS OR EVEN PERMANENTLY. THEREFORE, DEFLECTION VOLTAGES SHOULD BE APPLIED BEFORE OPERATING THE WRITING BEAM.

ATTENTION IS AGAIN CALLED TO THE FACT THAT THE STORAGE SURFACE CAN BE ERASED TO FAR BELOW CUTOFF BY A HIGH-AMPLITUDE VOLTAGE PULSE APPLIED TO THE BACKING ELECTRODE. A LARGE TRANSIENT VOLTAGE ON THAT ELECTRODE CAN PREVENT NORMAL WRITING FOR SEVERAL MINUTES THEREAFTER.

* TRADEMARK OF ITT

DEFLECTING ELECTRODES D1 AND D2 CAN ACT AS MIRROR ELECTRODES TO REFLECT FLOODING CURRENT. FLOODING CURRENT REFLECTED AT THE STORAGE SURFACE, RETURNING DOWN THE TUBE, CAN BE REFLECTED BY THE DEFLECTION ELECTRODES AT THE INSTANT WHEN THEIR POTENTIAL PASSES THROUGH ZERO VOLTAGE. THIS RE-REFLECTED AND CONCENTRATED CURRENT CAN THEN TRAVERSE THE LENGTH OF THE TUBE FOR THE THIRD TIME CAUSING A BRIGHT REGION TO APPEAR IN THE DISPLAY AND MAY EVEN ERASE THAT AREA IF ITS ARRIVAL COINCIDES IN TIME WITH AN ERASING PULSE. REFLECTION OF CURRENT BY THE DEFLECTING ELECTRODES IS IN SYNCHRONISM WITH THE DEFLECTING VOLTAGE APPLIED TO THEM SO THAT BRIGHTENING OF THE AFFECTED AREA OF THE DISPLAY OCCURS AT THE SAME FREQUENCY. TO AVOID THIS DISTURBANCE THE HIGHER-FREQUENCY DEFLECTION VOLTAGE SHOULD BE APPLIED TO THE OFFENDING DEFLECTING ELECTRODES D1 AND D2. THIS REDUCES THE DURATION OF THE TRANSIENT CURRENT PULSE TO THE EXTENT THAT ITS EFFECTS ARE NEGLIBIBLE.

WARNING:

THE METAL RING WHICH ENCIRCLES THE FACEPLATE OF THE 7172 IS AT VIEWING-SCREEN POTENTIAL. ALTHOUGH NORMALLY ENCAPSULATED IN PLASTIC AND ADEQUATELY INSULATED FROM METAL GROUND, TO AVOID POSSIBLE SHOCK BE CERTAIN THE HIGH VOLTAGE IS TURNED OFF BEFORE TOUCHING THE TUBE.

ADDITIONAL INFORMATION FOR SPECIFIC APPLICATIONS CAN BE OBTAINED FROM THE

ELECTRON TUBE APPLICATIONS SECTION
ITT COMPONENTS DIVISION
POST OFFICE BOX 412
CLIFTON, NEW JERSEY

* TRADEMARK OF THE INTERNATIONAL TELEPHONE & TELEGRAPH CORPORATION

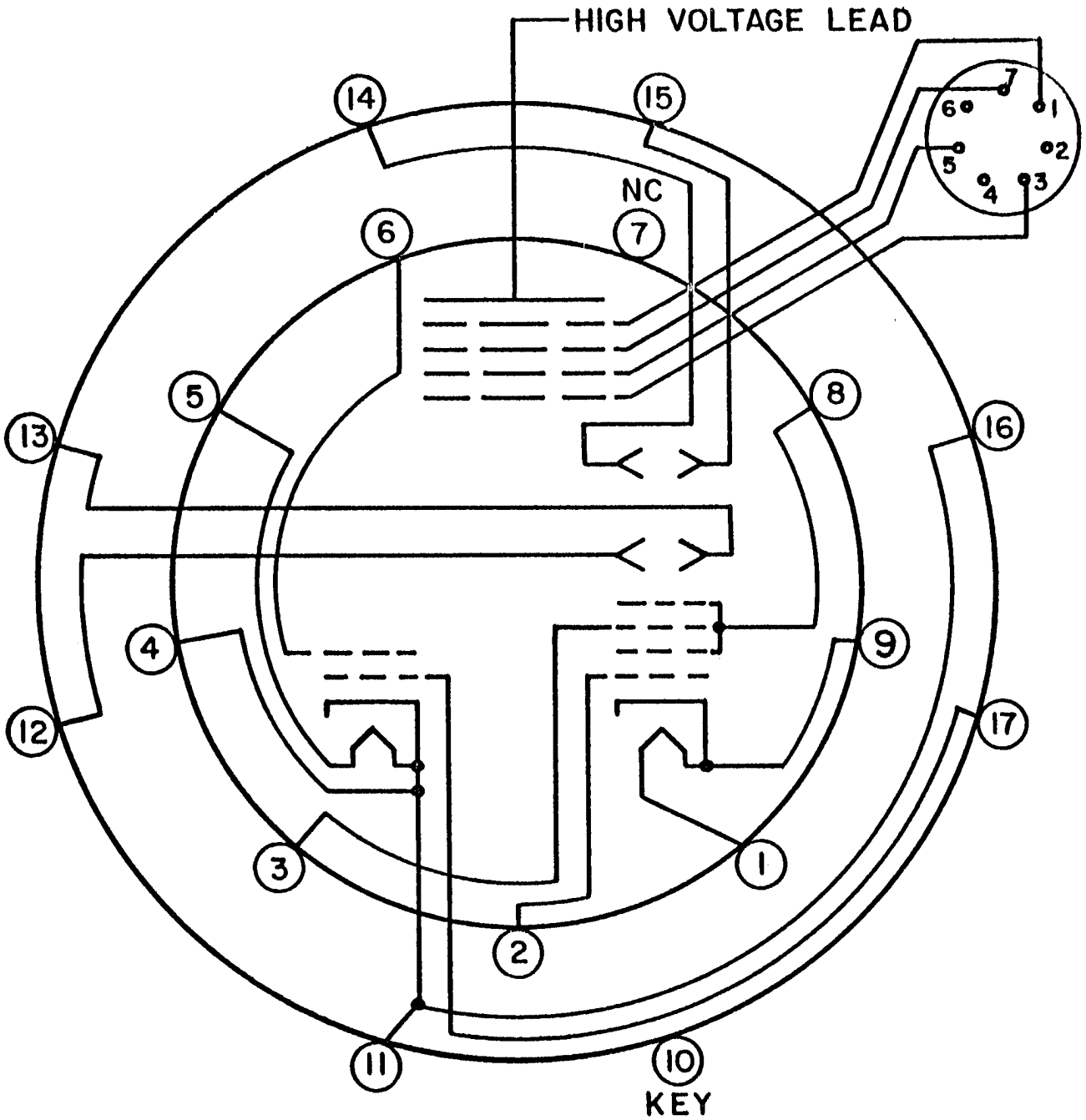

F-7172

BASING DIAGRAM

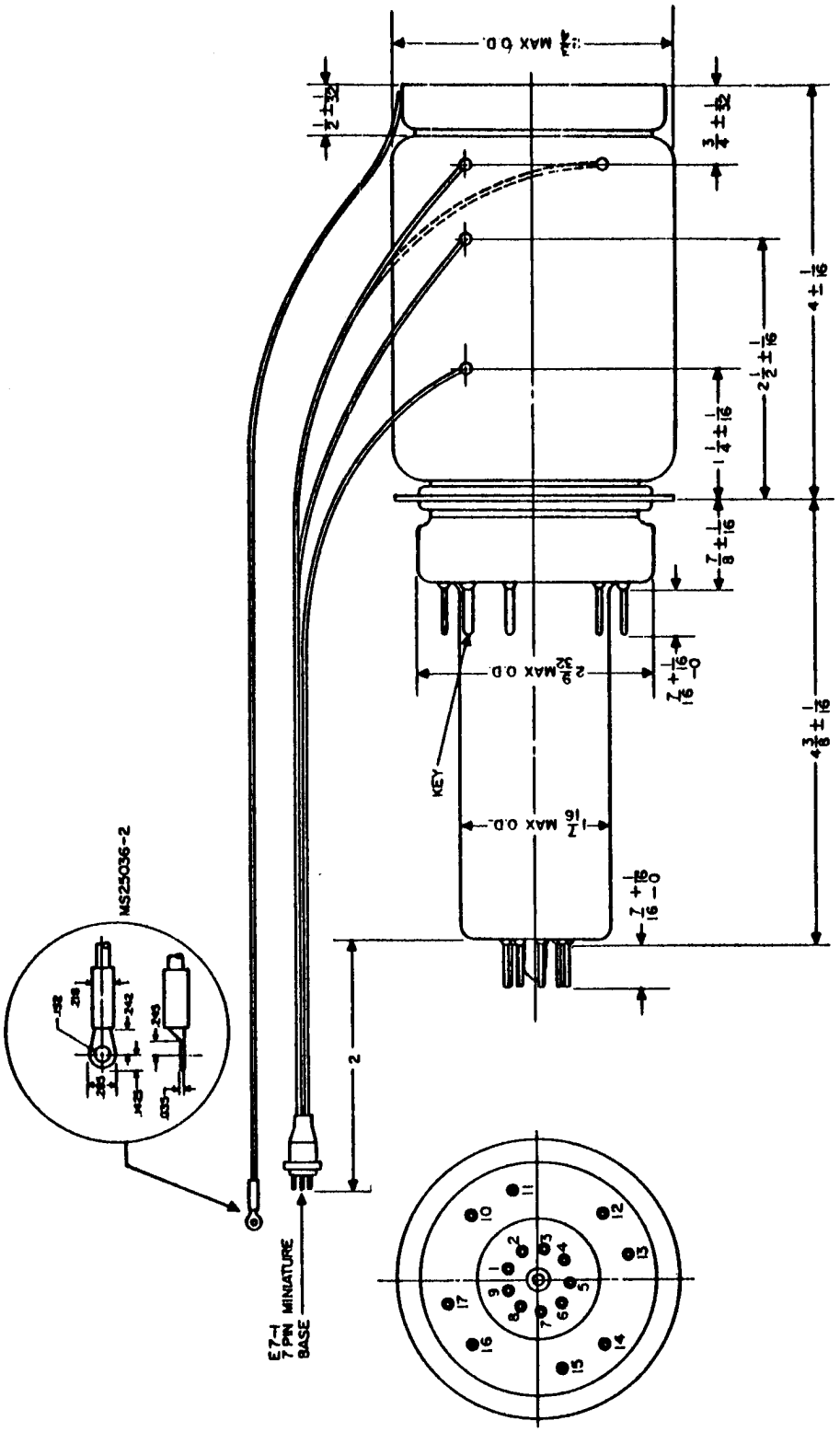

F-7172 OUTLINE

TENTATIVE

DESCRIPTION:

THE F-7173 IS A 4 INCH IATRON (DIRECT VIEW STORAGE CATHODE-RAY TUBE) THAT PRODUCES A BRIGHT VISUAL DISPLAY OF ELECTRICALLY STORED INFORMATION. IT IS ELECTROMAGNETICALLY FOCUSED AND DEFLECTED. THE TUBE DISPLAYS BRIGHT IMAGES ON A DARK BACKGROUND, CAN BE VIEWED IN DIRECT SUNLIGHT, AND FEATURES THE ABILITY TO WRITE, STORE, AND ERASE INFORMATION AT WILL. GREY SHADES ARE PRODUCED IN ACCORDANCE WITH AMPLITUDE VARIATIONS OF THE INPUT SIGNAL. THE TUBE HAS TWO ELECTRON GUNS, A WRITING GUN, WHICH WRITES THE INPUT SIGNAL ON A STORAGE MESH, AND A FLOOD GUN WHICH ILLUMINATES THE PHOSPHOR IN ACCORDANCE WITH THE STORED SIGNAL.

GENERAL:

DIMENSIONS	SEE OUTLINE AND FUNCTIONAL SCHEMATIC	
NOMINAL TUBE DIAMETER	4	INCHES
MINIMUM USEFUL DISPLAY DIAMETER	3	INCHES
PHOSPHOR	P-20	ALUMINIZED
OPERATING POSITION		ANY
CATHODE PRE-HEATING TIME	60	SECONDS
FOCUS		MAGNETIC
DEFLECTION		MAGNETIC

DIRECT INTERELECTRODE CAPACITANCES WITHOUT EXTERNAL SHIELD (APPROX.)

GRID #1 TO ALL OTHER ELECTRODES	2.5	UUF
WRITE CATHODE TO ALL OTHER ELECTRODES	8.0	UUF
FLOOD CATHODE TO ALL OTHER ELECTRODES	3.0	UUF

MAXIMUM RATINGS:

VIEWING SCREEN	10	KV DC	
BACKING ELECTRODE	25	VDC	
COLLECTOR	200	VDC	
ANODE #2	75	VDC	
GRID #3	INTERNALLY CONNECTED TO ANODE #2		
GRID #2	250	VDC	RESPECT WRITE CATHODE
GRID #1	0	VDC	RESPECT WRITE CATHODE
WRITE CATHODE	-1000	VDC	
HEATER-CATHODE	125	VDC	
FLOOD CATHODE	200	VDC	

* TRADEMARK OF THE INTERNATIONAL TELEPHONE & TELEGRAPH CORPORATION

TYPICAL OPERATING VALUES:

FLOOD SECTION

VIEWING SCREEN	+7	KV DC 700 UA MAXIMUM
BACKING ELECTRODE	+10	VDC AND ERASE PULSES
COLLECTOR	+125	VDC
ANODE #2	+44	VDC
ANODE #1	+60	VDC
CATHODE	0	VDC
HEATER	6.3	V AC OR DC 1.4 A

WRITE SECTION

HEATER	6.3	V AC OR DC .6A
CATHODE	-450	VDC 3 MA
GRID #1 (NOTE 1)	-40	VDC RESPECT WRITE CATHODE
GRID #2	+150	VDC RESPECT WRITE CATHODE
GRID #3	INTERNALLY CONNECTED TO ANODE #2	

RANGE OF OPERATING ADJUSTMENTS:

ANODE #2	+35 TO +50	VDC ADJUST FOR BEST COLLIMATION
GRID #1 (CUTOFF - NOTE 1)	-32 TO -45	VDC RESPECT WRITE CATHODE
ERASE PULSES	4-10 VOLTS	100-5000 PRF .5 U/SEC. WIDE

TYPICAL PERFORMANCE:

RESOLUTION (NOTE 2)		
MINIMUM BRIGHTNESS	120	LINES/INCH
MAXIMUM BRIGHTNESS	50	LINES/INCH
LIGHT OUTPUT	2800	FT. LAMBERTS
WRITING SPEED TO 90% BRIGHTNESS	40000	IN/SEC.
ERASE TIME (NOTE 3)	3	MILLISECONDS
VIEWING TIME (NOTE 4)	30	SECONDS

NOTES:

1. VISUAL CUTOFF OF THE STORED, FOCUSED, UNDEFLECTED SPOT.

2. RESOLUTION IS MEASURED BY THE SHRINKING RASTER METHOD AT THE CENTER OF THE VIEWING SCREEN.

3. ERASE TIME IS THE SHORTEST TIME IN WHICH INFORMATION CAN BE REMOVED FROM THE TUBE AFTER BEING STORED AT FULL BRIGHTNESS.

4. VIEWING TIME IS THE TIME THAT A SIGNAL STORED AT FULL BRIGHTNESS ANYWHERE IN THE DISPLAY AREA CAN BE VIEWED WITH ERASE PULSES APPLIED TO COUNTERACT ION WRITING.

* TRADEMARK OF ITT

SPECIAL PRECAUTIONS:

OBSERVE MAXIMUM RATINGS TO AVOID POSSIBLE DAMAGE TO THE TUBE. IN PARTICULAR THE VIEWING SCREEN VOLTAGE SHOULD BE LIMITED SO AS TO NEVER EXCEED 10 KV.

THE FULL VOLTAGE SHOULD NOT BE APPLIED TO THE VIEWING SCREEN INSTANTANEOUSLY. AN ORDINARY RC FILTER AT THE OUTPUT OF THE POWER SUPPLY WILL PROVIDE ADEQUATE ASSURANCE THAT THE VOLTAGE BUILD UP WILL NOT BE TOO ABRUPT. THE VIEWING SCREEN POWER SUPPLY SHOULD HAVE A SERIES RESISTANCE OF AT LEAST 1 MEG OHM.

REPEATED BOMBARDMENT WITH A HIGH CURRENT FOCUSED BEAM ON A SMALL AREA OF THE STORAGE SURFACE CAN BURN A DARK IMAGE INTO THE DISPLAY WHICH MAY REMAIN FOR SEVERAL HOURS OR EVEN PERMANENTLY. THEREFORE, THE DEFLECTION VOLTAGES SHOULD BE APPLIED BEFORE OPERATING THE WRITING BEAM.

ADDITIONAL INFORMATION FOR SPECIFIC APPLICATIONS CAN BE OBTAINED FROM THE

ELECTRON TUBE APPLICATIONS SECTION
ITT COMPONENTS DIVISION
POST OFFICE BOX 412
CLIFTON, NEW JERSEY

* TRADEMARK OF ITT

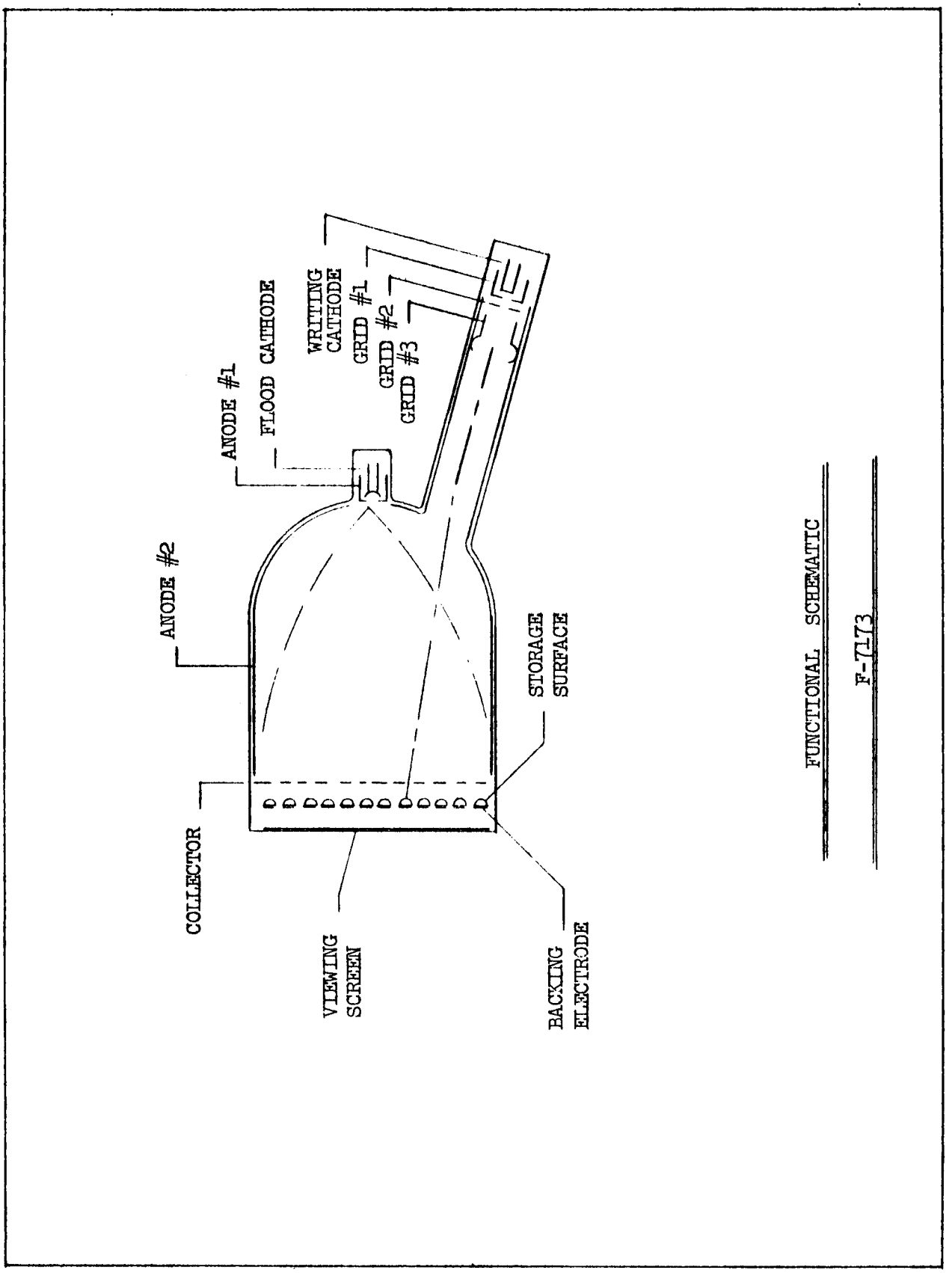

FUNCTIONAL SCHEMATIC

F-7173

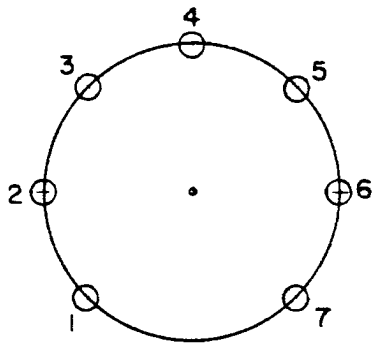

BOTTOM VIEW

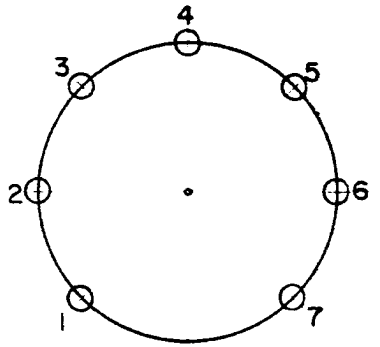

BOTTOM VIEW

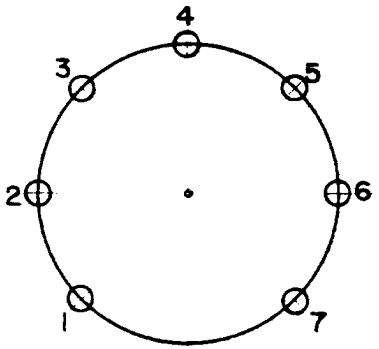

BOTTOM VIEW

FLOOD GUN

Pin	Element
1	Anode #1
2	N/C
3	Heater
4	Heater
5	Anode #1
6	N/C
7	Cathode

WRITE GUN

Pin	Element
1	Grid #1
2	N/C
3	Heater
4	Heater
5	Grid #3
6	Grid #2
7	Cathode

7 PIN PLUG FOR BULB CONNECTIONS

Pin	Electrode
1	Backing Electrode
2	N/C
3	N/C
4	Anode #2
5	N/C
6	N/C
7	Collector

7173 PIN CONNECTIONS

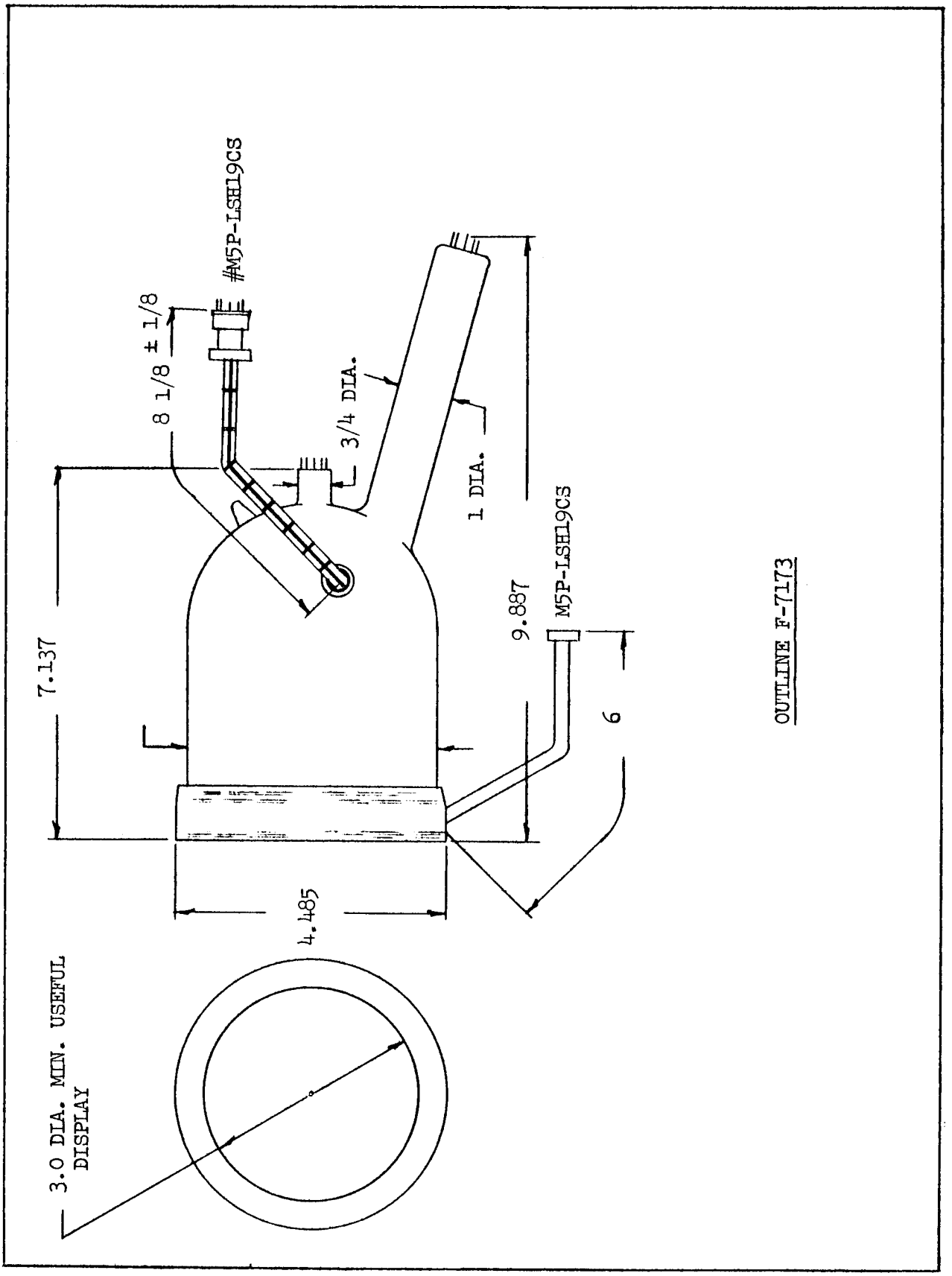

OUTLINE F-7173

ELECTRON TUBE DEPARTMENT ■ COMPONENTS DIVISION
INTERNATIONAL TELEPHONE AND TELEGRAPH CORPORATION, CLIFTON, NEW JERSEY

F-7174
IATRON *

ITT EXPORT CORPORATION
67 BROAD STREET · NEW YORK 4, N. Y.

TENTATIVE

DESCRIPTION:

THE F-7174 IS A 4 INCH IATRON (DIRECT VIEW STORAGE CATHODE-RAY TUBE) THAT PRODUCES A BRIGHT VISUAL DISPLAY OF ELECTRICALLY STORED INFORMATION. IT IS ELECTROMAGNETICALLY FOCUSED AND DEFLECTED. THE TUBE DISPLAYS BRIGHT IMAGES THAT CAN BE VIEWED IN DIRECT SUNLIGHT AND FEATURES THE ABILITY TO WRITE, STORE, AND ERASE INFORMATION AT WILL. GREY SHADES ARE PRODUCED IN ACCORDANCE WITH AMPLITUDE VARIATIONS OF THE INPUT SIGNAL. THE TUBE HAS TWO ELECTRON GUNS, A WRITING GUN, WHICH WRITES THE INPUT SIGNAL ON A STORAGE MESH, AND A FLOOD GUN, WHICH ILLUMINATES THE VIEWING SCREEN IN ACCORDANCE WITH THE STORED SIGNAL.

GENERAL:

DIMENSIONS	SEE OUTLINE AND FUNCTIONAL SCHEMATIC	
NOMINAL TUBE DIAMETER	4	INCHES
MINIMUM USEFUL DISPLAY DIAMETER	3	INCHES
PHOSPHOR	P-20	ALUMINIZED
OPERATING POSITION		ANY
WEIGHT	0.89	POUNDS
CATHODE PRE-HEATING TIME	30	SECONDS
FOCUS METHOD		MAGNETIC
DEFLECTION METHOD		MAGNETIC

DIRECT INTER-ELECTRODE CAPACITANCES WITHOUT EXTERNAL SHIELD (APPROX.)

GRID #1 TO ALL OTHER ELECTRODES	2.5	UUF
WRITE CATHODE TO ALL OTHER ELECTRODES	8.0	UUF
FLOOD CATHODE	3.0	UUF
ANODE #1	3.7	UUF

MAXIMUM RATINGS

	FLOOD SECTION	
VIEWING SCREEN	18	KVDC
BACKING ELECTRODE	25	VDC
COLLECTOR	250	VDC
ANODE #4	150	VDC
ANODE #3	150	VDC
ANODE #2	150	VDC
ANODE #1	80	VDC
CATHODE	200	VDC
HEATER-CATHODE	125	VDC

* TRADEMARK OF THE INTERNATIONAL TELEPHONE AND TELEGRAPH CORPORATION

MAXIMUM RATINGS (CONTINUED)

WRITE SECTION

HEATER CATHODE	125	VDC	
CATHODE	-1000	VDC	
GRID #1	-150	VDC	RESPECT WRITE CATHODE
GRID #2	+500	VDC	RESPECT WRITE CATHODE
GRID #3		INTERNALLY CONNECTED TO ANODE #2	
PEAK VOLTAGE BETWEEN GRID #2 AND GRID #1 OR GRID #3	500	VDC	

TYPICAL OPERATING VALUES:

FLOOD SECTION

VIEWING SCREEN	15	KVDC	(1.7 MA MAX.)
BACKING ELECTRODE	+10	VDC	AND ERASE PULSES
COLLECTOR	+180	VDC	.5 TO 1.7 MA
ANODE #4	+90	VDC	35 TO 300 UA
ANODE #3	+20	VDC	200 TO 500 UA
ANODE #2	+30	VDC	1 TO 1.5 MA
ANODE #1	+60	VDC	.5 TO 2.0 MA
CATHODE	0	VDC	4.7 MA MAX.
HEATER	6.3	V AC OR DC	1.4 A

WRITE SECTION

HEATER	6.3	V AC OR DC	.6 A
CATHODE	-450	VDC	.5 TO 1.5 MA
GRID #1 (CUT-OFF NOTE 1)	-35	VDC	RESPECT WRITE CATHODE
GRID #2	+150	VDC	RESPECT WRITE CATHODE
GRID #3		INTERNALLY CONNECTED TO ANODE #2	

RANGE OF TYPICAL OPERATING ADJUSTMENTS:

ANODE #2	25 TO 40 VOLTS	ADJUST FOR BEST COLLIMATION
ANODE #3	10 TO 25 VOLTS	ADJUST FOR BEST COLLIMATION
GRID #1 (CUT-OFF NOTE 1)	-28 TO -46 VOLTS	
ERASE PULSES	3-12 VOLTS, 1.5 USEC. WIDE, 100-5000 PRF ADJUST FOR DESIRED VIEWING TIME	

TYPICAL PERFORMANCE:

RESOLUTION (NOTE 2) AT 50% OF FULL BRIGHTNESS	35	LINES PER INCH
BRIGHTNESS	15,000	FT. LAMBERTS
WRITING SPEED 20 VOLTS DRIVE TO 90%	25,000	INCHES PER SECOND
ERASE TIME (NOTE 3)	3	MILLISECONDS
VIEWING TIME (NOTE 4)	2	SECONDS
NUMBER OF HALF-TONE STEPS	4	

* TRADEMARK OF ITT

NOTES:

1. VISUAL CUT-OFF OF THE STORED, FOCUSED, STATIONARY SPOT.

2. RESOLUTION IS MEASURED BY THE SHRINKING RASTOR METHOD AT THE CENTER OF THE VIEWING SCREEN.

3. ERASE TIME IS THE SHORTEST TIME IN WHICH INFORMATION CAN BE REMOVED FROM THE TUBE AFTER BEING STORED AT FULL BRIGHTNESS.

4. VIEWING TIME IS THE TIME THAT A SIGNAL STORED AT FULL BRIGHTNESS ANYWHERE IN THE DISPLAY AREA CAN BE VIEWED WITH ERASE PULSES APPLIED TO COUNTERACT ION WRITING.

SPECIAL PRECAUTIONS:

OBSERVE MAXIMUM RATINGS TO AVOID POSSIBLE DAMAGE TO THE TUBE. IN PARTICULAR, THE VIEWING SCREEN VOLTAGE SHOULD BE LIMITED SO AS TO NEVER EXCEED 18 KV.

THE FULL VOLTAGE SHOULD NOT BE APPLIED TO THE VIEWING SCREEN INSTANTANEOUSLY. AN ORDINARY RC FILTER AT THE OUTPUT OF THE POWER SUPPLY PROVIDES ADEQUATE ASSURANCE THAT THE VOLTAGE BUILD UP WILL NOT BE TOO ABRUPT. THE MINIMUM RESISTANCE OF THE HIGH VOLTAGE LEAD SHOULD BE 1 MEGOHM.

REPEATED BOMBARDMENT WITH A HIGH CURRENT FOCUSED WRITING BEAM ON A SMALL AREA OF THE STORAGE SURFACE CAN BURN A DARK IMAGE INTO THE DISPLAY, WHICH MAY REMAIN FOR SEVERAL HOURS OR EVEN PERMANENTLY. THEREFORE, DEFLECTION VOLTAGES SHOULD BE APPLIED BEFORE OPERATING THE WRITING BEAM.

ADDITIONAL INFORMATION FOR SPECIFIC APPLICATIONS CAN BE OBTAINED FROM THE

ELECTRON TUBE APPLICATIONS SECTION
ITT COMPONENTS DIVISION
POST OFFICE BOX 7065
ROANOKE, VIRGINIA

* TRADEMARK OF ITT

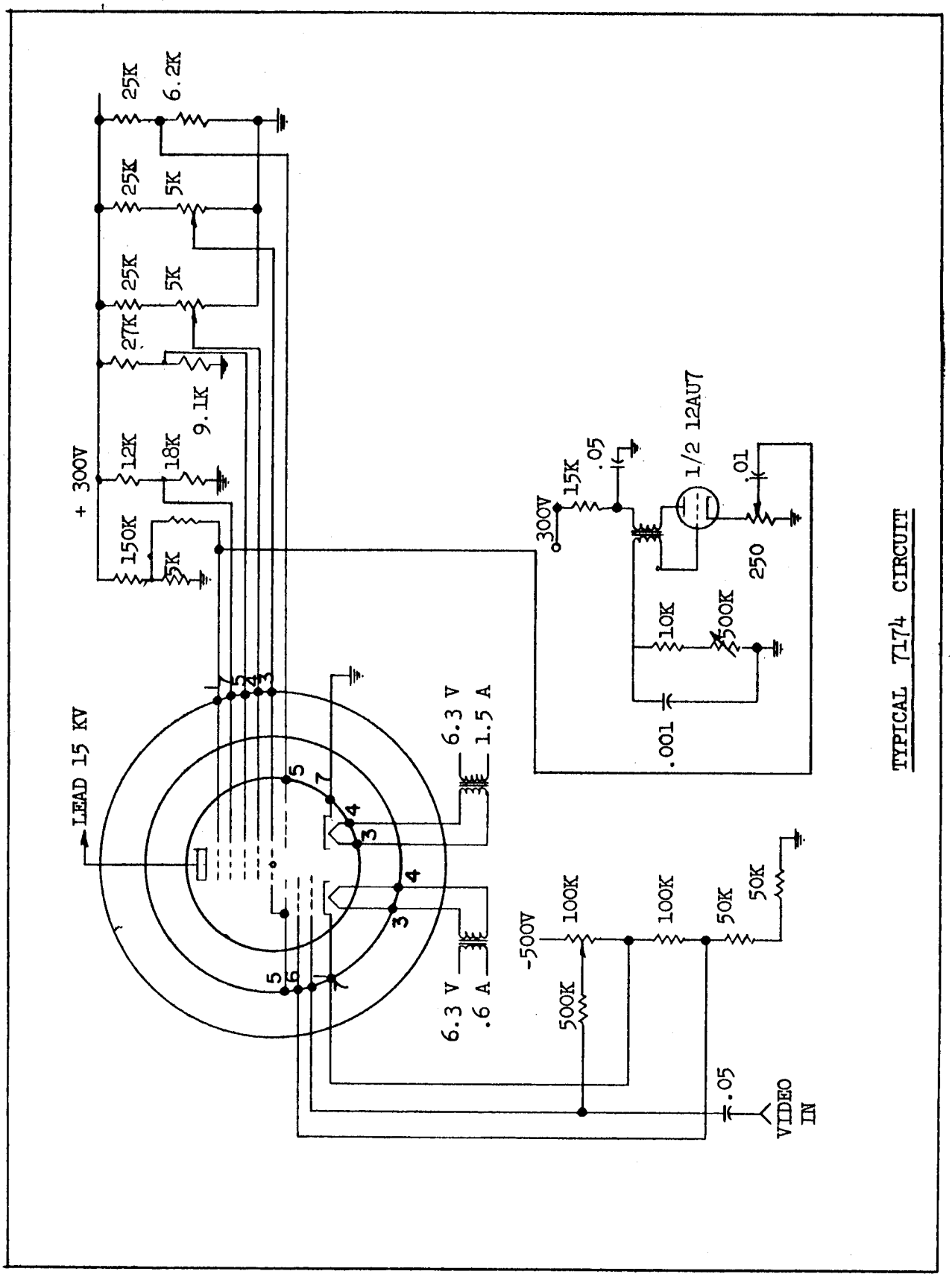

TYPICAL 7174 CIRCUIT

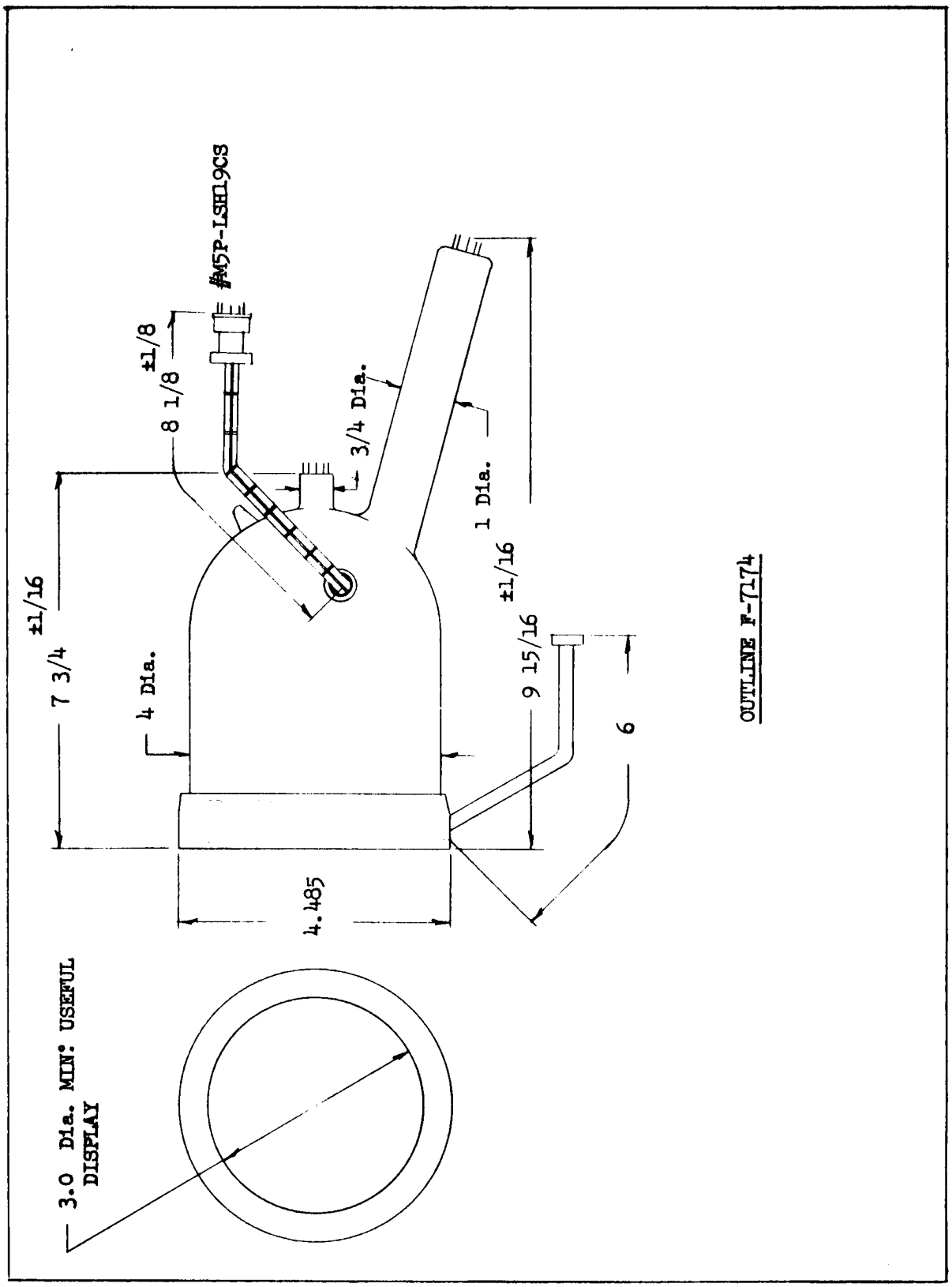

OUTLINE F-7174

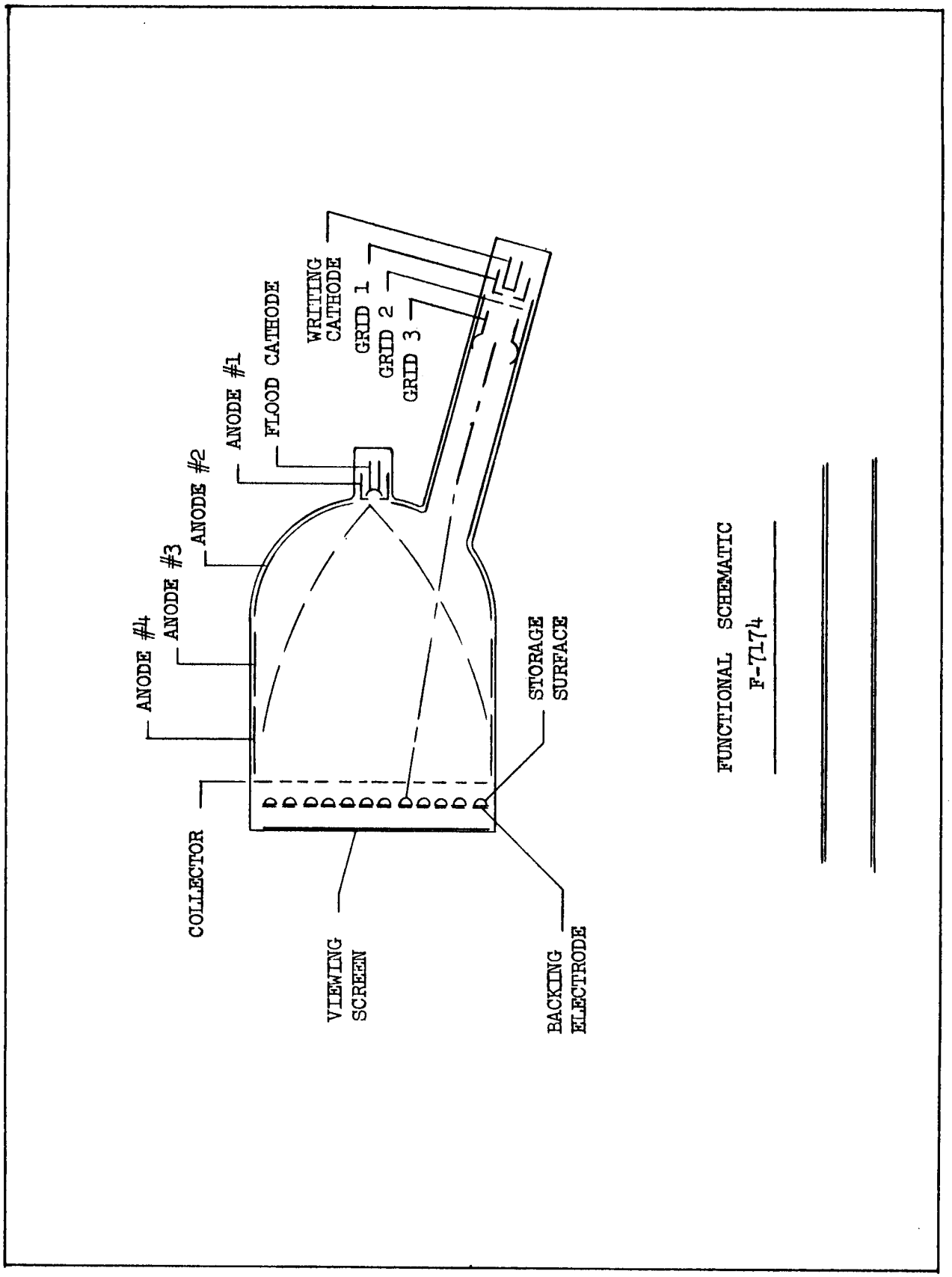

FUNCTIONAL SCHEMATIC
F-7174

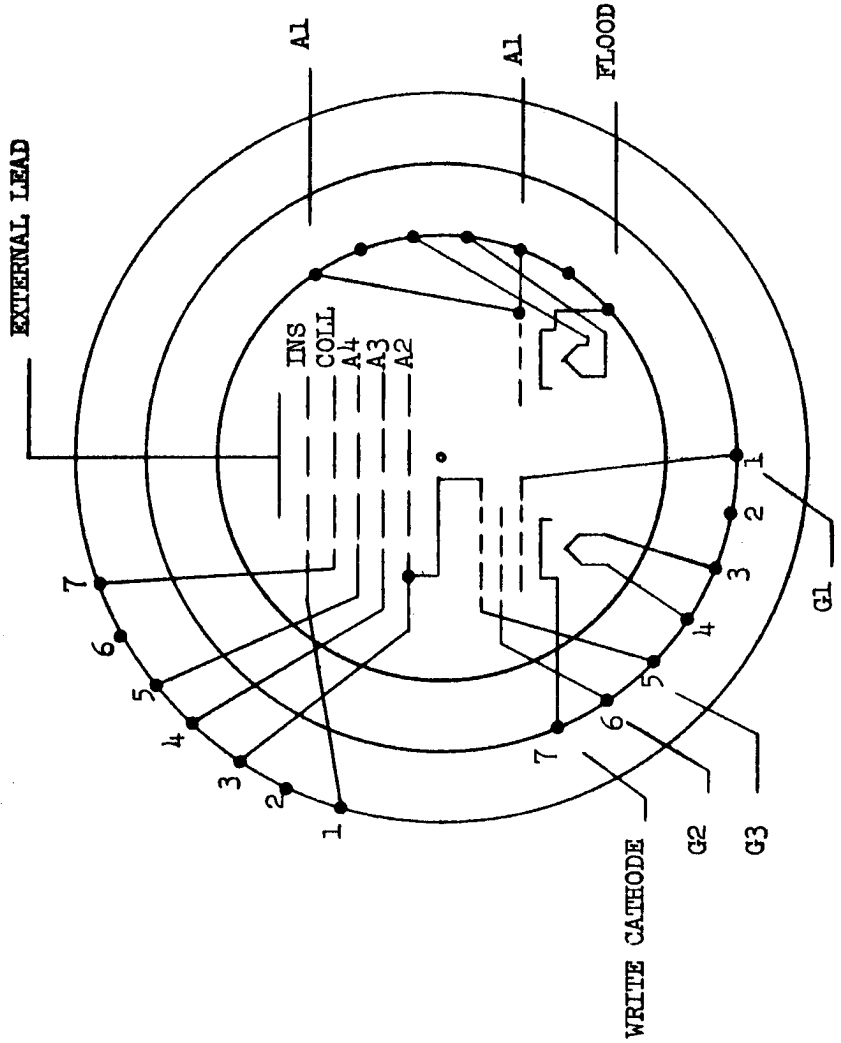

NOTE: INNER CIRCLE ---- FLOOD GUN, E7-1 SMALL BUTTON MINIATURE
CENTER CIRCLE --- WRITING GUN, E7-1 SMALL BUTTON MINIATURE
OUTER CIRCLE ---- BULB CONNECTIONS, E7- MINIATURE BASE

7174 BASING DIAGRAM

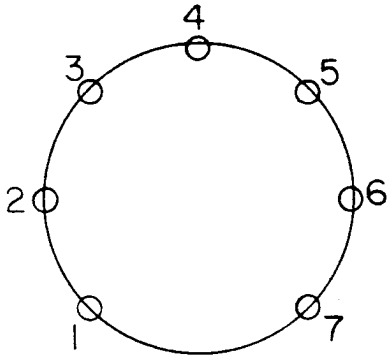

BOTTOM VIEW
FLOOD GUN

Pin	Element
1.	Anode #1
2.	N/C
3.	Heater
4.	Heater
5.	Anode #1
6.	N/C
7.	Cathode

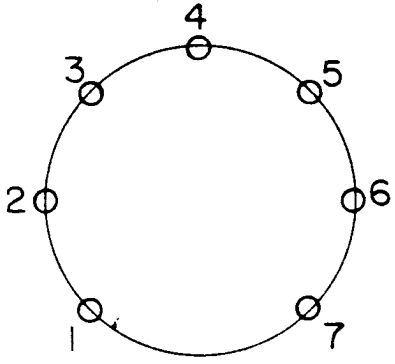

BOTTOM VIEW
WRITE GUN

Pin	Element
1.	Grid #1
2.	N/C
3.	Heater
4.	Heater
5.	Grid #3, Anode #2
6.	Grid #2
7.	Cathode

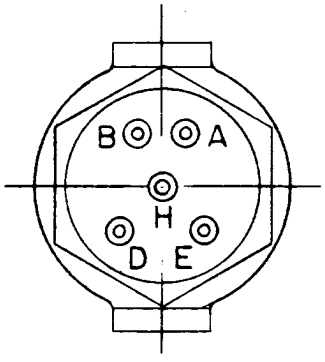

WINCHESTER PLUG
M5P-LSH19CS

Pin	Element
A.	Rear Wall
B.	Center Wall
D.	Collector
E.	Front Wall
H.	Insulator

7174 PIN CONNECTIONS

SUPERSEDES OUTLINE DATED 7/61

engineering TUBE DATA

F-7206
POWER TRIODE

ITT Components Division

TENTATIVE SPECIFICATION

DESCRIPTION

The F-7206 is a three-electrode tube designed for use as an industrial oscillator. The anode is capable of dissipating 20 kilowatts during Continuous Commercial Service. Cooling is accomplished by circulating water on the anode and forced air on the bulb and seals. The cathode is a thoriated tungsten filament of mesh cathode construction and may be operated on d-c or single phase a-c.

ELECTRICAL

Filament Voltage	7.5 volts
Filament Current	220 amperes
Filament Starting Current Full rated filament voltage may be safely applied to the cold filament	
Filament Heating Time, minimum	5 seconds
Amplification Factor E_c = 150 v. I_b = 4.0 amps	18
Peak Cathode Current (Note 1)	45 amperes
Direct Inter-electrode Capacitances	
Grid-Plate	55 μμf
Grid-Filament	42 μμf
Plate-Filament	3.0 μμf

Note 1: Represents maximum usable cathode current (plate current plus grid current) for any CW condition of operation.

MECHANICAL

Type of Cooling				Water and Forced Air
Water flow on Anode				
Plate Dissipation	8	12	16	20 kilowatts
Minimum Water Flow	2.6	3.3	4.6	7.2 gpm
Maximum Outgoing Water Temperature				70 °C
Air Flow (to bulb and seals) from a 3-inch diameter nozzle				50 cfm
Weight, approximate				6 lbs

ITT COMPONENTS DIVISION
INTERNATIONAL TELEPHONE AND TELEGRAPH CORPORATION
P. O. BOX 412, CLIFTON, NEW JERSEY

MAXIMUM RATINGS AND TYPICAL OPERATING CONDITIONS

Radio-Frequency Power Amplifier and Oscillator--Class C Telegraphy
(Key down conditions per tube without Amplitude Modulation*)

Maximum CCS Ratings, Absolute Values

D-C Plate Voltage	12,500 volts max.
D-C Grid Voltage	-1,500 volts max.
D-C Plate Current	8 amperes max.
D-C Grid Current**	.6 amperes max.
Plate Input	70 kilowatts max.
Plate Dissipation	20 kilowatts max.

Typical Operation

D-C Plate Voltage	9,500	7,500	6,000 volts
D-C Grid Voltage	-1,300	-1,200	-1,000 volts
Peak R-F Grid Voltage	1,850	1,700	1,500 volts
D-C Plate Current	5.5	5.2	5.5 amperes
D-C Grid Current, approx.	.530	.53	.53 amperes
Driving Power, approx.	1,000	900	800 watts
Grid Dissipation, approx.	300	275	275 watts
Power Output, approx.	35	28	22 kilowatts

*Modulation essentially negative may be used if the positive peak of the envelope does not exceed 115 per cent of the carrier conditions.

**The power dissipated by the grid must never exceed 600 watts. Grid dissipation approximates the product of peak positive grid voltage and d-c grid current. Peak positive grid voltage may be measured by means of a suitable peak voltmeter connected between grid and filament, or determined by calculations using the constant current characteristics of the tube.

RATINGS VERSUS FREQUENCY

Maximum ratings apply up to 30 megacycles. The tube may be operated at higher frequencies provided the maximum values of plate voltage and power input are reduced according to the tubulation below (other maximum ratings are the same as shown above). Special attention should be given to adequate ventilation of the bulb at these frequencies.

Frequency	30	40	50 megacycles
Percentage of Maximum Rated Plate Voltage and Plate Input	100	80	50 per cent

PULSE SERVICE OPERATIONS

In pulse service, it is possible to operate the tube under conditions not permissible in CW operation. Because of the wide variety of operating conditions, it is advisable that tube operation recommendations be obtained from our Engineering Department for specific conditions.

ITT COMPONENTS DIVISION
INTERNATIONAL TELEPHONE AND TELEGRAPH CORPORATION
P. O. BOX 412, CLIFTON, NEW JERSEY

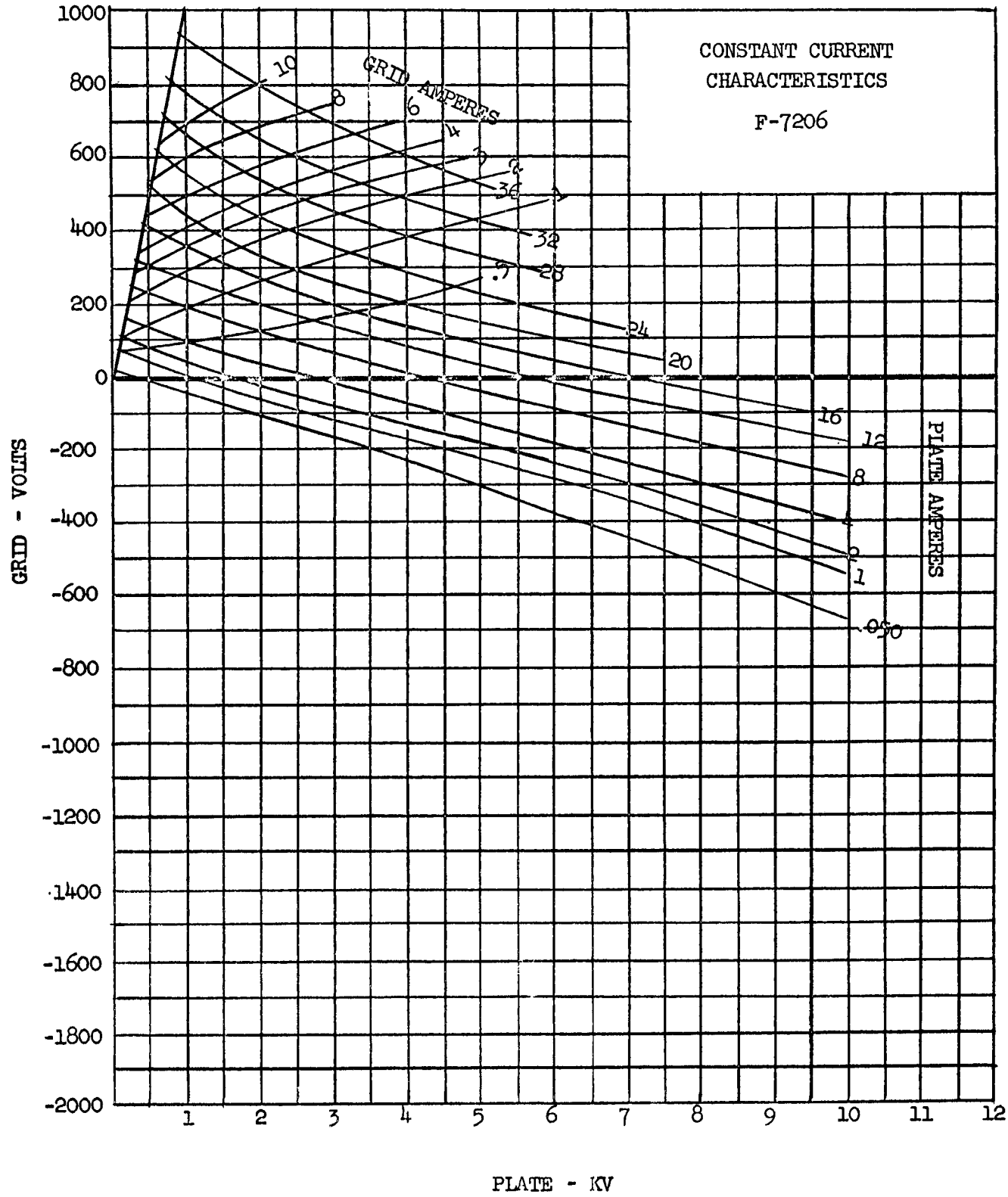

407

ITT COMPONENTS DIVISION
INTERNATIONAL TELEPHONE AND TELEGRAPH CORPORATION
P. O. BOX 412, CLIFTON, NEW JERSEY

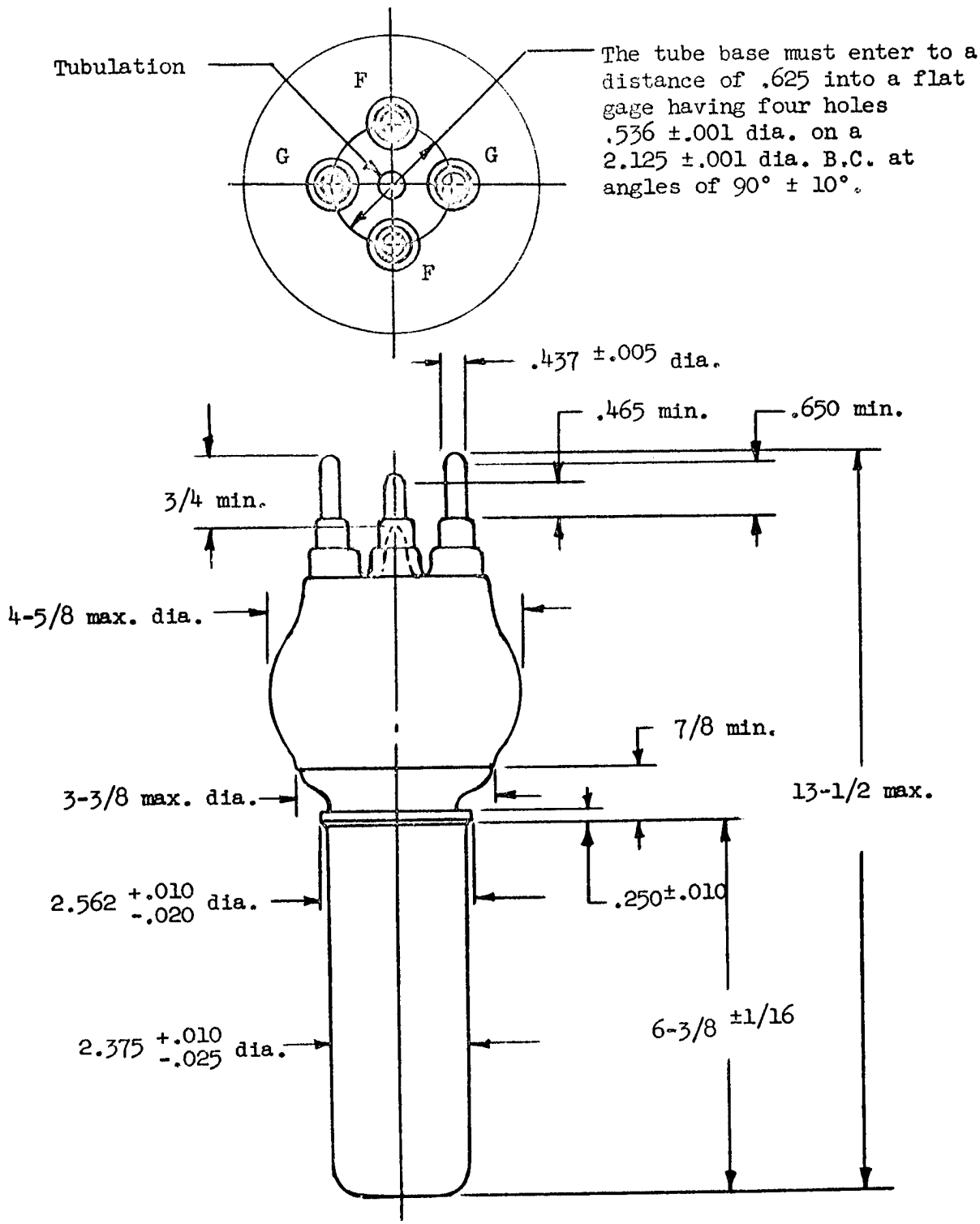

OUTLINE
F-7206 POWER TRIODE

ITT COMPONENTS DIVISION
INTERNATIONAL TELEPHONE AND TELEGRAPH CORPORATION
P. O. BOX 412, CLIFTON, NEW JERSEY

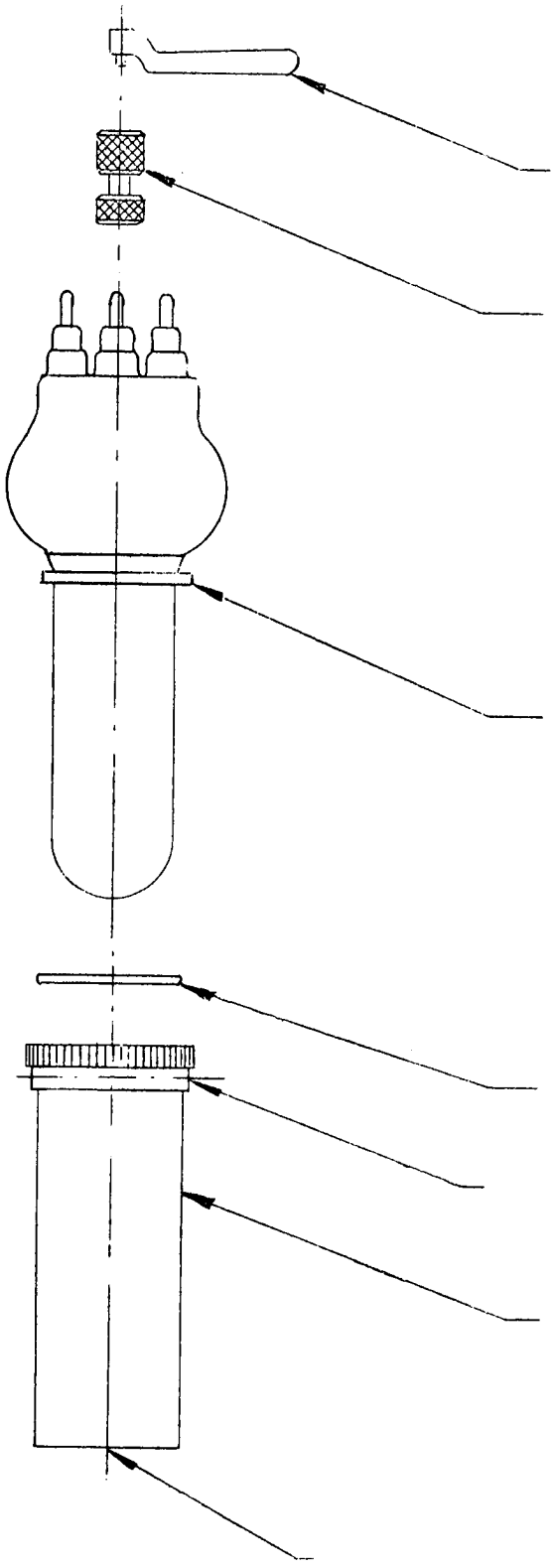

Spanner Wrench
RT-52843-1 - 2 req'd
(not to scale)

Terminal Connector Assem.
RT-52578-1 - 4 req'd
(not to scale)

Federal Tubes
Type F-5619
F-6800
F-5666
F-5668
F-7206

'O' Ring
RT-53836-1

3/8 N.P. Th'd
(Outlet)

Water Jacket
RT-53221-12
A - used with F-5668
B - used with F-5666
C - used with F-5619
F-6800
F-7206

3/8 N.P. Th'd
(Inlet)

ACCESSORIES

ITT COMPONENTS DIVISION
INTERNATIONAL TELEPHONE AND TELEGRAPH CORPORATION
P. O. BOX 412, CLIFTON, NEW JERSEY

engineering TUBE DATA

F-7207
Power
Triode

ITT Components Division

Tentative Specification

DESCRIPTION

The F-7207 is a three electrode tube designed for use as a modulator; its electrical characteristics making it particularly suitable for Class AB modulator circuits. The anode is air-cooled and capable of 17 kilowatts dissipation. The cathode is a thoriated tungsten filament. Maximum ratings apply for audio frequency use only.

ELECTRICAL

Filament Voltage	7.0 volts
Filament Current	110 amperes
Amplification Factor	
E_c = -200 v. I_b = 1.0 amps	6
Direct Inter-electrode Capacitance	
Grid-Plate	42 μμf
Grid-Filament	43 μμf
Plate-Filament	12 μμf

MECHANICAL

Mounting Position			Vertical, anode down
Type of Cooling			Forced Air
Maximum Incoming Air Temperature			45 °C
Required Air Flow on Anode			
Plate Dissipation - kw	17	14	12
Air Flow - cfm	1000	800	700
Pressure - inches of water	3.5	2.3	1.7
Maximum Glass Temperature			180 °C
Weight, approximate			45 lbs

MAXIMUM RATINGS AND TYPICAL OPERATING CONDITIONS

Audio-Frequency Power Amplifier and Modulator--Class AB_1

Maximum Ratings, Absolute Values

D-C Plate Voltage	10 kv
Maximum Signal D-C Plate Current*	5 amperes
Maximum Signal Plate Input*	30 kw
Plate Dissipation*	17 kw

*Averaged over any audio frequency cycle of sine wave form.

ITT COMPONENTS DIVISION
INTERNATIONAL TELEPHONE AND TELEGRAPH CORPORATION
P. O. BOX 412, CLIFTON, NEW JERSEY

F-7207
Power
Triode

Typical Operation
(Unless otherwise specified, values are for two tubes)

D-C Plate Voltage	5000	7000	9000	volts
D-C Grid Voltage	-900	-1400	-1800	volts
Peak A-F Grid-to-Grid Voltage	1760	2740	3500	volts
Zero Signal D-C Plate Current	0.8	0.5	0.5	amperes
Maximum Signal D-C Plate Current	2.6	3.2	3.2	amperes
Effective Load Resistance Plate-to-Plate	3700	4600	5800	ohms
Maximum Signal Driving Power	0	0	0	watts
Maximum Signal Power Out	7.4	13.75	18	kw

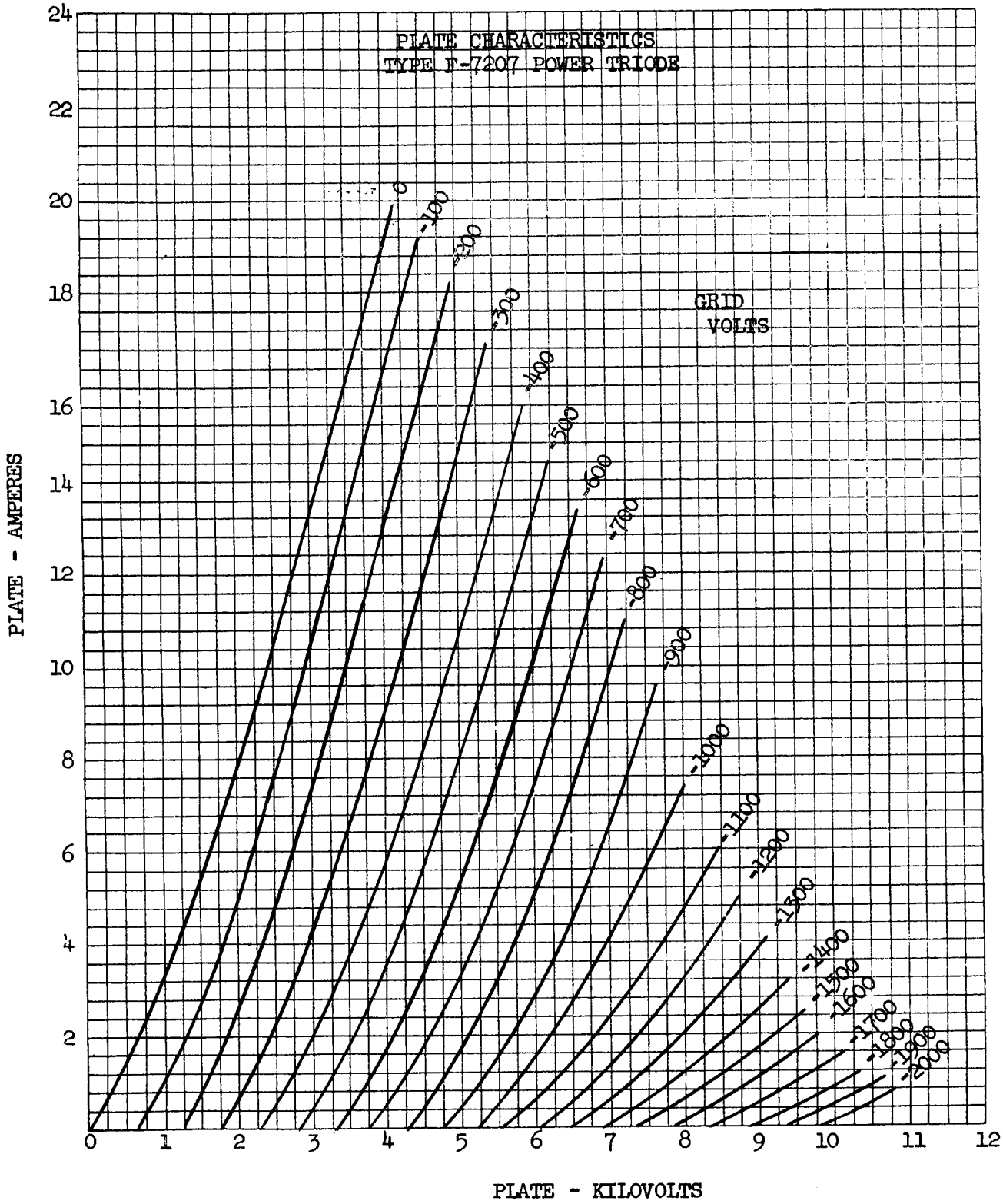

406

ITT COMPONENTS DIVISION
INTERNATIONAL TELEPHONE AND TELEGRAPH CORPORATION
P. O. BOX 412, CLIFTON, NEW JERSEY

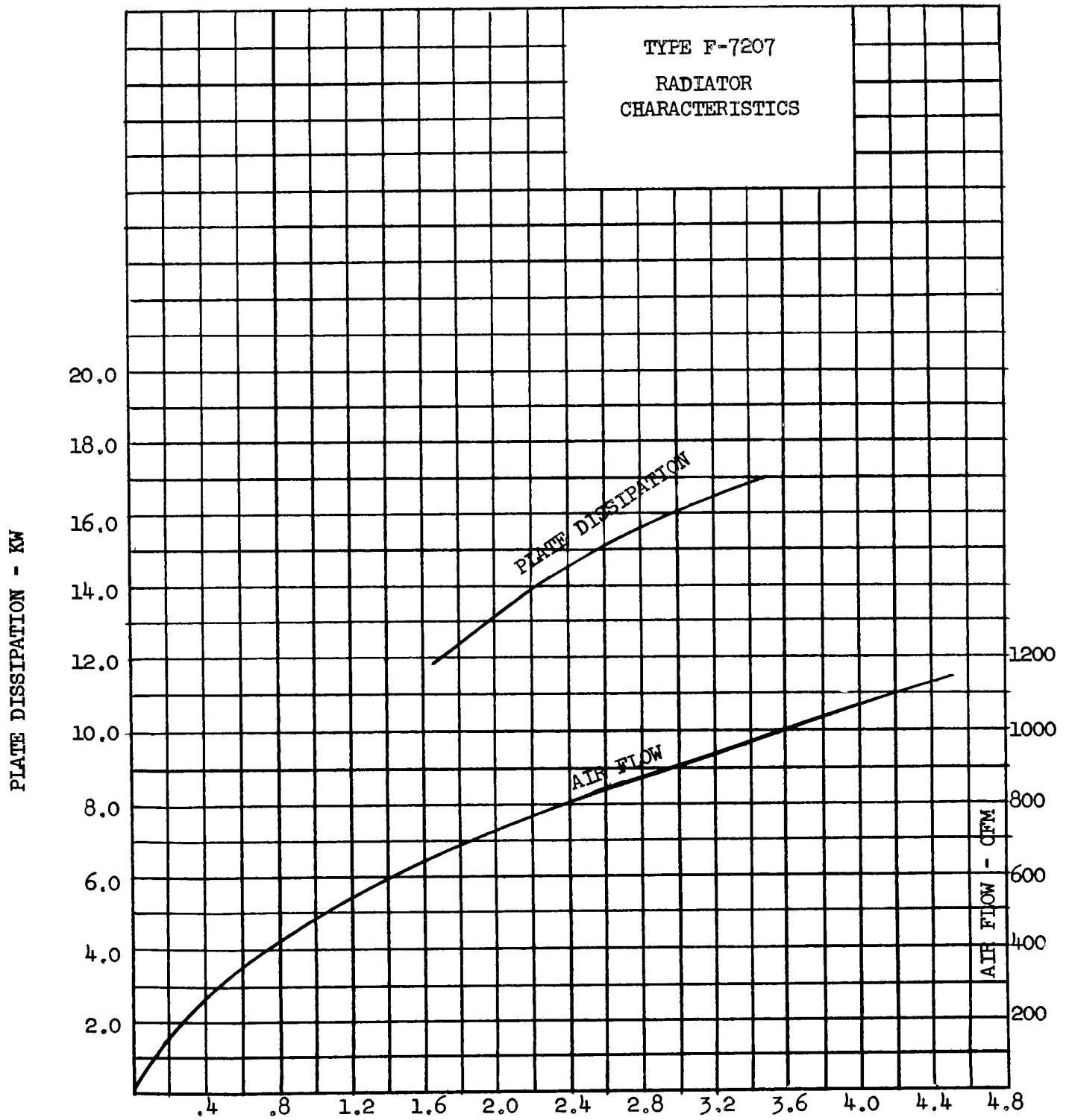
TYPE F-7207
RADIATOR
CHARACTERISTICS
PLATE DISSIPATION - KW
20.0
18.0
16.0
14.0
12.0
10.0
8.0
6.0
4.0
2.0
PLATE DISSIPATION
AIR FLOW
.4
.8
1.2
1.6
2.0
2.4
2.8
3.2
3.6
4.0
4.4
4.8
1200
1000
800
600
400
200
AIR FLOW - CFM.

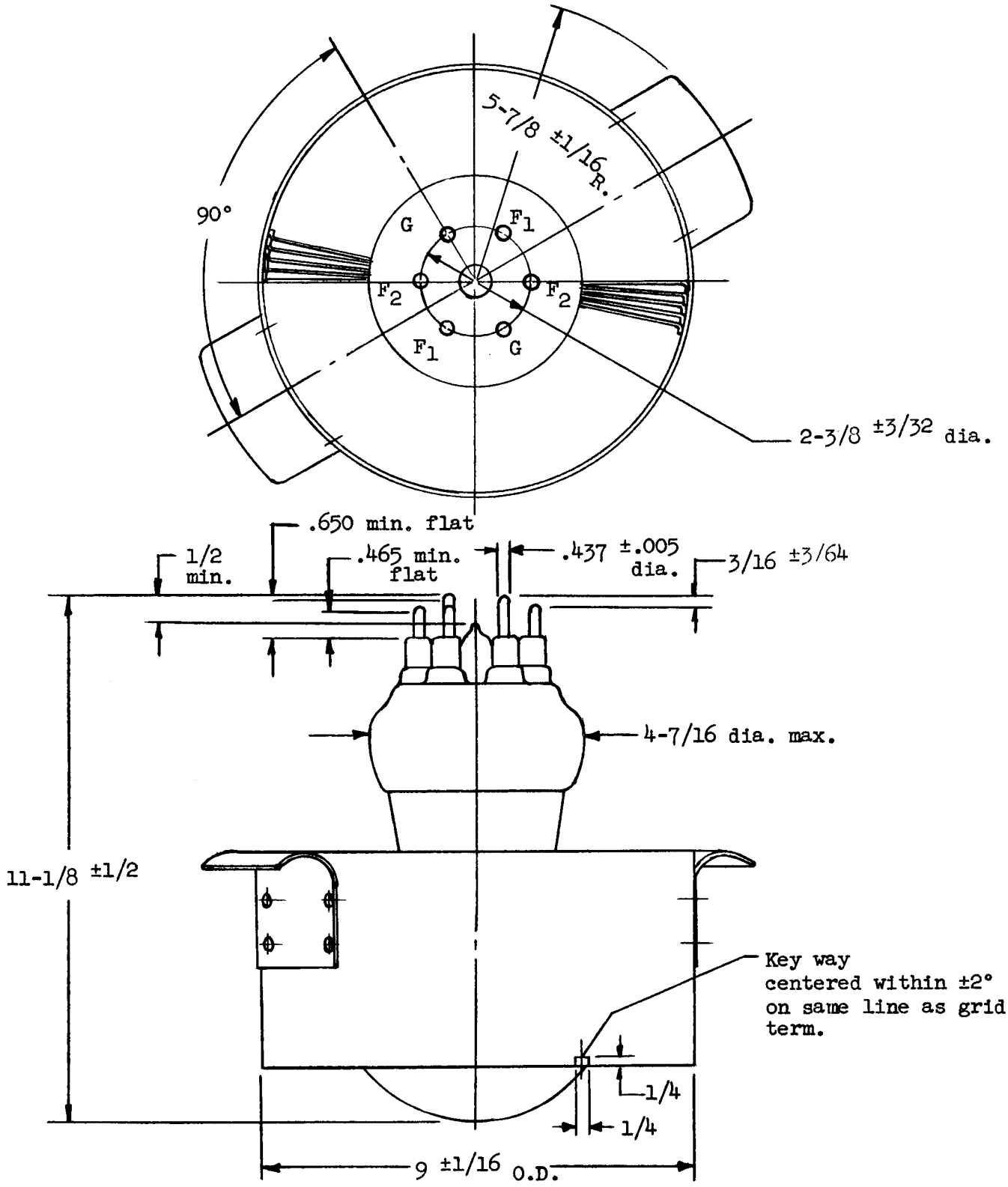

406

OUTLINE
F-7207

ITT COMPONENTS DIVISION
INTERNATIONAL TELEPHONE AND TELEGRAPH CORPORATION
P. O. BOX 412, CLIFTON, NEW JERSEY

ELECTRON TUBE DEPARTMENT ■ COMPONENTS DIVISION
INTERNATIONAL TELEPHONE AND TELEGRAPH CORPORATION, CLIFTON, NEW JERSEY

F-7338
TRAVELING
WAVE TUBE

FORMERLY
F-6826A

TENTATIVE

DESCRIPTION:

The F-7338 is a 1 kilowatt pulse traveling wave amplifier tube having 40 db gain and 2000 to 4000 mc frequency range. It is constructed in a rugged metal envelope with a helix-type slow wave structure. The integral matching circuit is in 50 ohm coaxial line and is provided with type "N" connectors. The tube is self-aligning in the external solenoid which is required to provide a uniform magnetic field. A convergent beam gun and oxide impregnated cathode are used. Duty cycles up to .005 and pulse lengths up to 10 microseconds can be used.

A control grid suitable for grid pulsing is provided.

ELECTRICAL RATINGS, ABSOLUTE VALUES:

Heater Voltage	6.3 (±10%)	volts
Heater Current	5.0	amperes
Maximum Anode Voltage (Note 1)	8500	volts
Maximum Shell Current (Note 2)	0.5	ampere peak
Maximum Collector Voltage (Note 3)	9000	volts
Maximum Collector Dissipation (Note 4)	100	watts avg.
Maximum R-F Input Power	10	watts avg.
Maximum R-F Output Power	10	watts avg.
Maximum Duty Cycle	.005	
Maximum Pulse Width (Beam)	10	μ sec.
Maximum Cathode Current	2.5	amperes peak
Maximum Grid Voltage		
Negative	-300	volts
Positive (Note 7)	+6%	of anode voltage

ELECTRICAL INFORMATION:

Maximum Frequency (Note 5)	2000	mc
Minimum Frequency (Note 5)	4000	mc
Minimum Cold Transmission Loss	60	db
Capacitance - control grid to all other elements	9	μμfd

MECHANICAL INFORMATION:

Type of Cathode	Oxide Impregnated Unipotential
Base, Small Shell Duodecal, 6 Pin	JEDEC Designation B6-63
Type of Envelope	Metal
Magnetic Field Strength	1200 gauss
Length of Magnetic Field	9.625 inches uniform
Mounting Position	Any
Weight (not including magnet)	1 lb. 14 ozs.
R-F Connections	50 ohm coax with Type "N" Jack UG-23B/U
Type of Cooling	Forced Air
Air flow on Collector Radiator (Note 4)	20 cfm
Glass Temperature	160°C max.

TYPICAL OPERATION AS POWER AMPLIFIER:

Center Frequency	3000	mc
Anode Voltage (Note 1)	7800	volts
Cathode Current	1.8	amperes peak
Collector Voltage (tied to shell)	7500	volts
Collector Current	1.4	amperes peak
Power Output (at center frequency)	1.8	kw peak
Bandwidth (Note 6)	2.0 to 4.0	kmc
Gain (Note 6)	40	db
Duty	.001	
Pulse Width	2	μ sec.
Grid Bias (for cut-off)	-100	volts
Grid Voltage during Pulse (Note 8)	+350	volts
Grid Current during Pulse	0.1	amperes peak

Note 1: All voltages shown are with respect to cathode. Anode and helix are connected internally to the shell. The shell is normally operated at ground potential and the anode connection is made to the shell of the solenoid.

Note 2: The shell current is the difference between cathode current and collector current. Since this current, in general, should be minimized, it may be desirable to measure current from shell to ground. In making this measurement, care should be taken that both the tube and solenoid are completely insulated from ground. Once operating characteristics (voltage, current, and magnetic field) have been established, shell should be grounded.

Note 3: The tube may be operated with the collector tied to the shell (anode and helix) or may be operated at several hundred volts positive with respect to shell with slight improvement in beam transmission. The potential difference between collector and shell must be limited to 500 volts minimum.

Note 4: Forced air cooling is required for average collector power in excess of 10 watts. As the collector power is increased, the air flow required increases. At the maximum collector power of 100 watts, a minimum air flow of 20 cfm through the cooling fins is required.

Note 5: Useful gain and power output exists below 2000 mc and above 4000 mc and can be utilized by adjusting anode voltage to optimize the frequency range desired. However, bandwidth cannot be extended both upward and downward simultaneously and maximum gain and power output outside the normal bandwidth will be lower than rated values.

Note 6: The following gain, power, bandwidth relations apply: The minimum power and gain is 1 kw at 40 db from 2400 to 3600 mc, and 500 watts at 37 db from 2000 to 4000 mc. Small signal gain is less than 50 db over the operating bandwidth. Saturated power output of at least 1 kw can be obtained from 2200 to 4000 mc. Bandwidth between 6 db small signal points is greater than 500 mc and bandwidth between 10 db small signal points is greater than 1800 mc.

Note 7: Positive voltage must not be applied to the grid in the absence of anode voltage.

Note 8: The positive grid voltage pulse should be the minimum consistent with normal power output.

GENERAL OPERATING INSTRUCTIONS:

(1) Heater warm up of 2 minutes before applying high voltage is recommended.

(2) High voltage must not be applied in the absence of proper grid bias and magnetic field. Positive grid uplse voltage must not be applied in the absence of high voltage.

(3) Initial adjustments should be done at low duty cycle (less than .001) to prevent damage due to high shell (interception) current.

Standard solenoids to operate this tube are available, and solenoids designed for particular applications can be supplied.

Additional information for specific applications can be obtained from the

Electron Tube Applications Section
ITT Components Division
Box 412
Clifton, New Jersey

TYPICAL POWER IN - POWER OUT CHARACTERISTIC

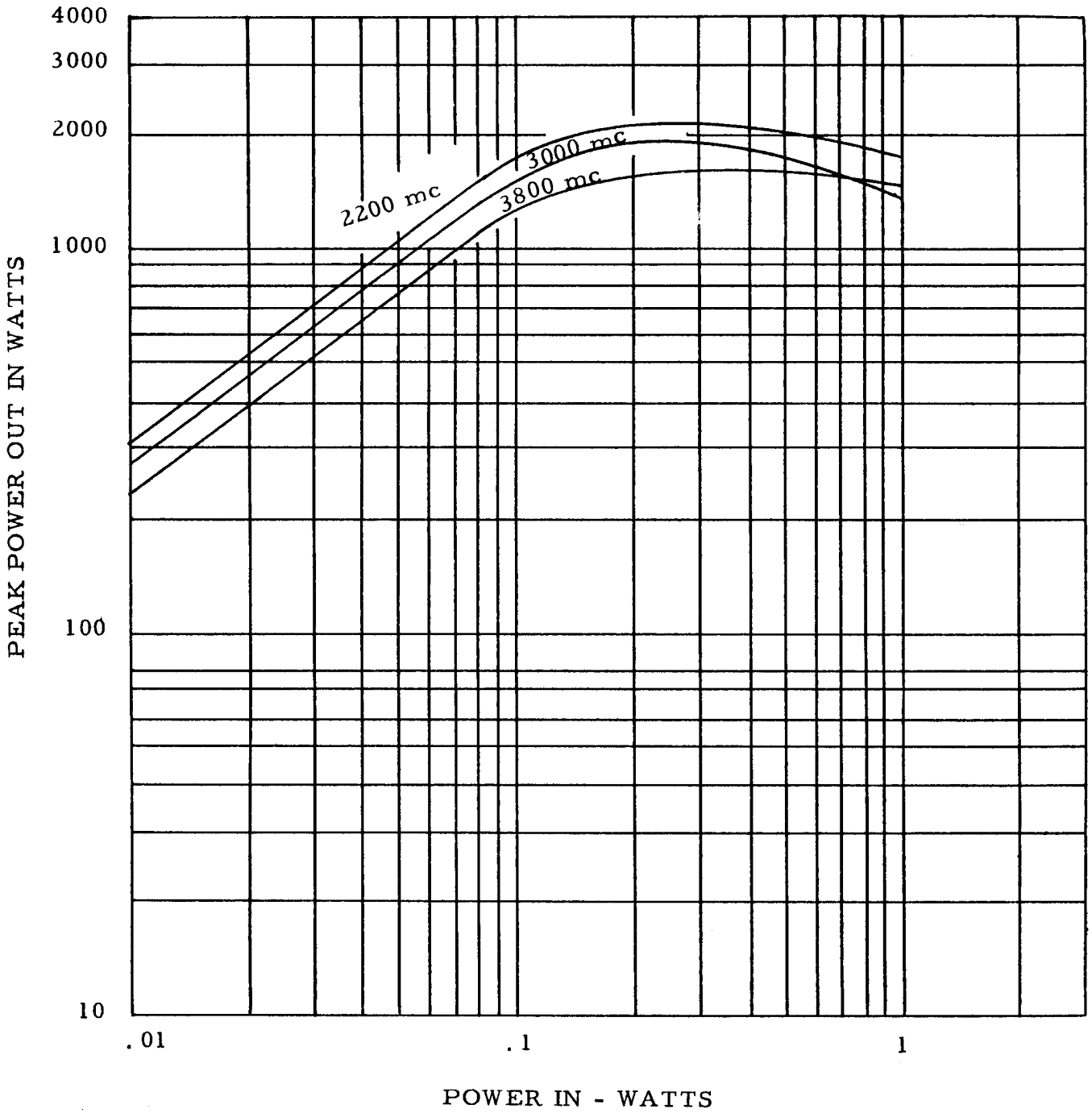

TYPICAL P_{OUT} VS. FREQUENCY CHARACTERISTIC

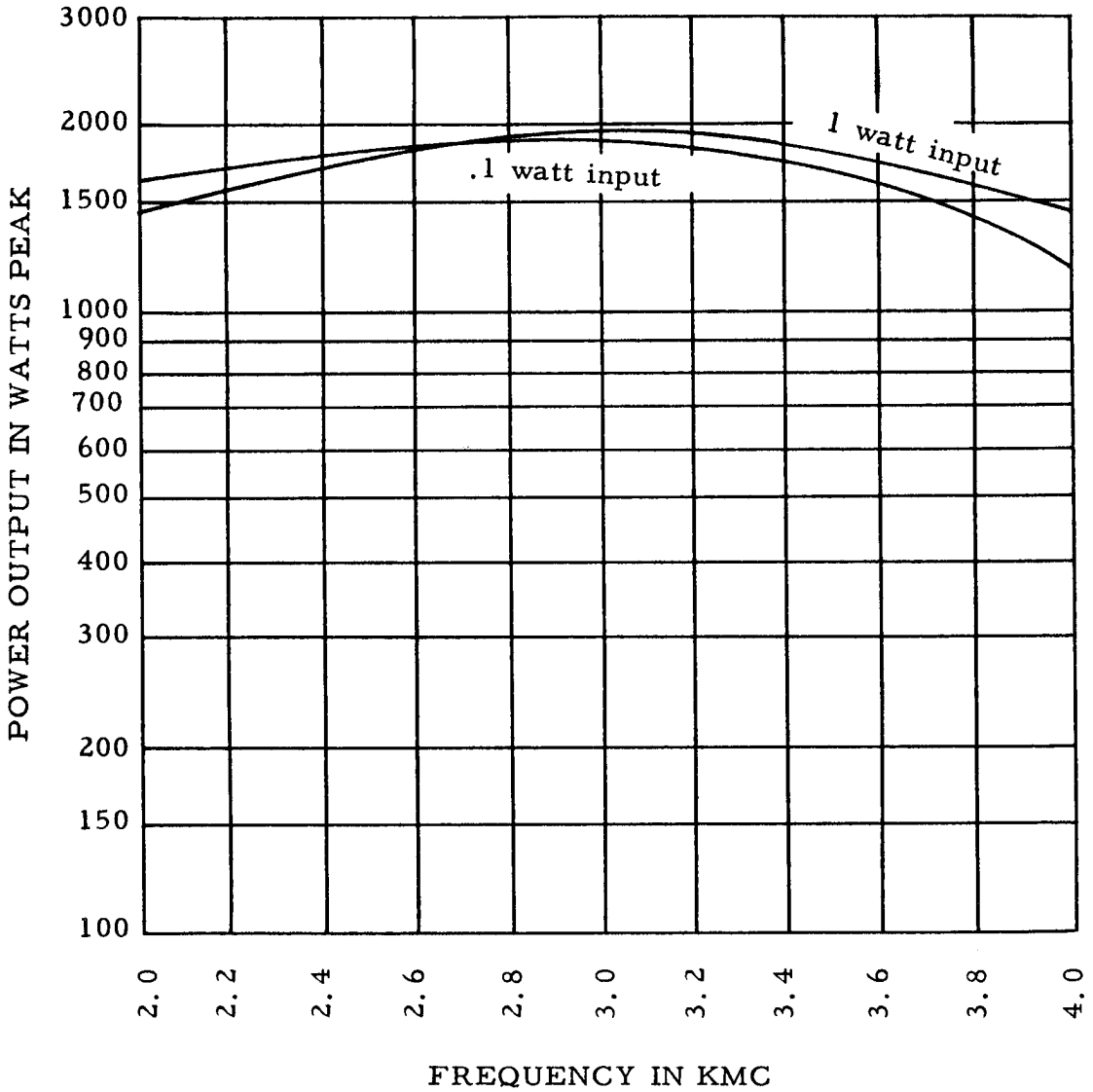

ITT
ELECTRON TUBE DEPARTMENT ■ COMPONENTS DIVISION
INTERNATIONAL TELEPHONE AND TELEGRAPH CORPORATION, CLIFTON, NEW JERSEY

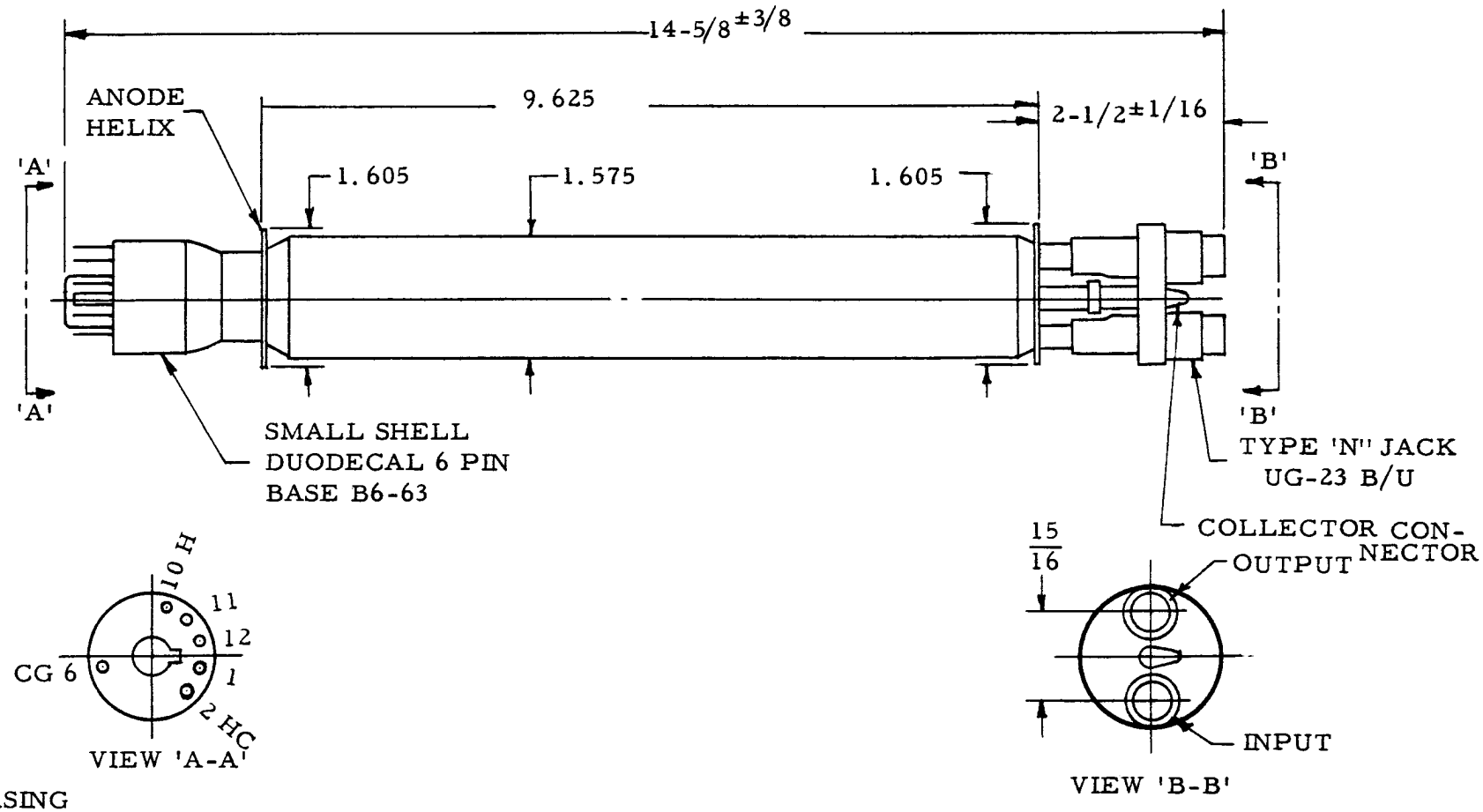

TRAVELING WAVE TUBE TYPE F-7338

BASING

PIN	ELEMENT
1	NO CONN.
2	HEATER CATHODE
6	CONTROL GRID
10	HEATER
11	NO CONN.
12	NO CONN.

ELECTRON TUBE DEPARTMENT ■ COMPONENTS DIVISION
INTERNATIONAL TELEPHONE AND TELEGRAPH CORPORATION, CLIFTON, NEW JERSEY

F-7339
TRAVELING
WAVE TUBE

FORMERLY
TYPE D-92

TENTATIVE

DESCRIPTION:

The F-7339 is a 1 kilowatt pulse traveling wave amplifier tube having 27 db gain and 8500 to 9600 mc frequency range. It is constructed in a rugged metal envelope with a helix type slow wave structure. The integral matching circuit is in 50 ohm coaxial line and is provided with type "N" connectors. The tube is self-aligning in the external solenoid which is required to provide a uniform magnetic field. A convergent beam gun and oxide impregnated cathode are used. Duty cycles up to .005 and pulse widths up to 10 microseconds can be used.

ELECTRICAL RATINGS, ABSOLUTE VALUES:

Heater Voltage	6.3 (±10%)	volts
Heater Current	2.5	amperes
Maximum Anode Voltage (Note 1)	12	kilovolts peak
Maximum Shell Current (Note 2)	0.5	ampere peak
Maximum Collector Voltage (Note 3)	12.5	kilovolts peak
Maximum Collector Dissipation (Note 4)	150	watts average
Maximum R-F Input Power	5	watts average
Maximum R-F Output Power	10	watts average
Maximum Duty Cycle	.005	
Maximum Pulse Width (Beam)	10	microseconds
Maximum Cathode Current	2.5	amperes peak

ELECTRICAL INFORMATION:

Maximum Frequency (Note 5)	9600	mc
Minimum Frequency (Note 5)	8500	mc
Minimum Cold Transmission Loss	60	db
Capacitance		
All Gun Elements to Shell	5	μμfd

MECHANICAL INFORMATION:

Type of Cathode	Oxide Impregnated Unipotential	
Base, Small Shell Duodecal, 5 Pin	JEDEC Designation B5-57	
Type of Envelope		Metal
Magnetic Field Strength	2000-2800	Gauss
Length of Magnetic Field	6.75	inches uniform
Mounting Position		Any
Weight (not including magnet)		1 lb. 7 ozs.
R-F Connections		50 ohm coax with Type "N" Jack UG-23B/U
Type of Cooling		Forced Air
Air Flow on Collector Radiator (Note 4)	30	cfm
Glass Temperature	160°C	max.

TYPICAL OPERATION AS POWER AMPLIFIER:

Center Frequency	9000	mc
Anode Voltage (Note 1)	11	kilovolts peak
Cathode Current	1.8	amperes peak
Collector Voltage (tied to Shell)	11	kilovolts peak
Collector Current	1.5	amperes peak
Power Output (at center frequency)	1.5	kilowatts peak
Bandwidth for Po = 1 kilowatt	8.5 to 9.6	kmc
Gain (Note 6)	27	db
Duty	.001	
Pulse Width	2	microseconds

Note 1: All voltages shown are with respect to cathode. Anode and helix are connected internally to the shell. The shell is normally operated at ground potential and the anode connection is made to the shell of the solenoid.

Note 2: The shell current is the difference between cathode current and collector current. Since this current, in general, should be minimized, it may be desirable to measure current from shell to ground. In making this measurement, care should be taken that both the tube and solenoid are completely insulated from ground. Once operating characteristics (voltage, current, and magnetic field) have been established, shell should be grounded.

Note 3: The tube may be operated with the collector tied to the shell (anode and helix) or may be operated at several hundred volts positive with respect to shell with slight improvement in beam transmission. The potential difference between collector and shell must be limited to 500 volts maximum.

Note 4: Forced air cooling is required for average collector power in excess of 10 watts. As the collector power is increased, the air flow required increases. At the maximum collector power of 150 watts, a minimum air flow of 30 cfm through the cooling fins is required.

Note 5: Useful gain and power output exists below 8500 mc and above 9600 mc and can be utilized by adjusting anode voltage to optimize the frequency range desired. However, bandwidth cannot be extended both upward and downward simultaneously and maximum gain and power output outside the normal bandwidth will usually be lower than rated values.

Note 6: This gain is obtained over the 8.5 to 9.6 kmc bandwidth at the power level indicated. Since this is in the power saturation region, small signal gain will be approximately 10 db higher.

OPERATING INSTRUCTIONS:

(1) Heater warm up of 2 minutes before applying high voltage is recommended.

(2) Initial adjustments should be done at low duty cycle (less than .001 to prevent tube damage due to high shell (interception) current.

Standard solenoids to operate this tube are available, and solenoids designed for particular applications can be supplied.

Additional information for specific applications can be obtained from the

Electron Tube Applications Section
ITT Components Division
Box 412
Clifton, New Jersey

TYPICAL P_{out} VS. FREQUENCY CHARACTERISTICS

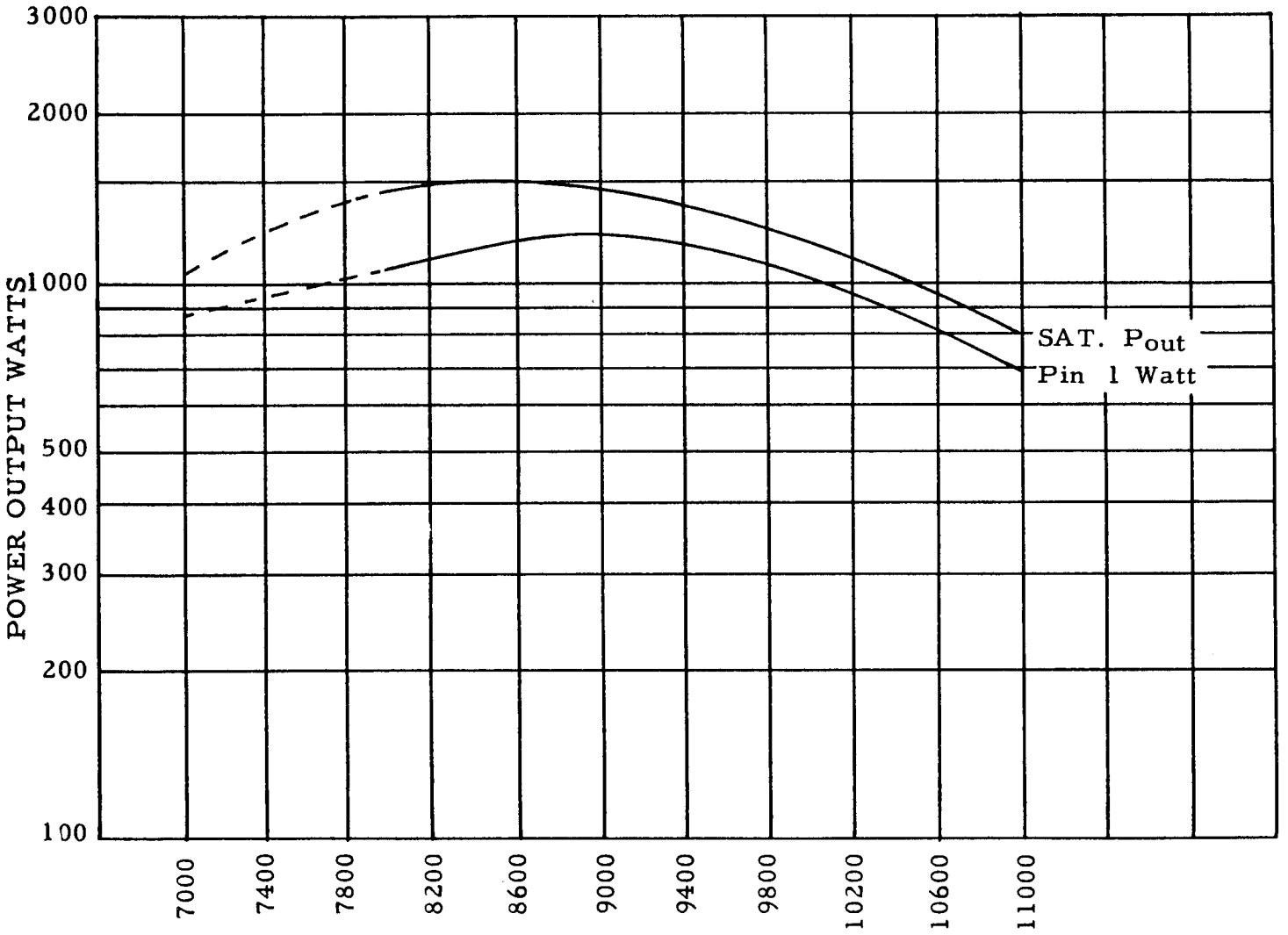

TYPICAL P_{out} VS. P_{in} CHARACTERISTIC

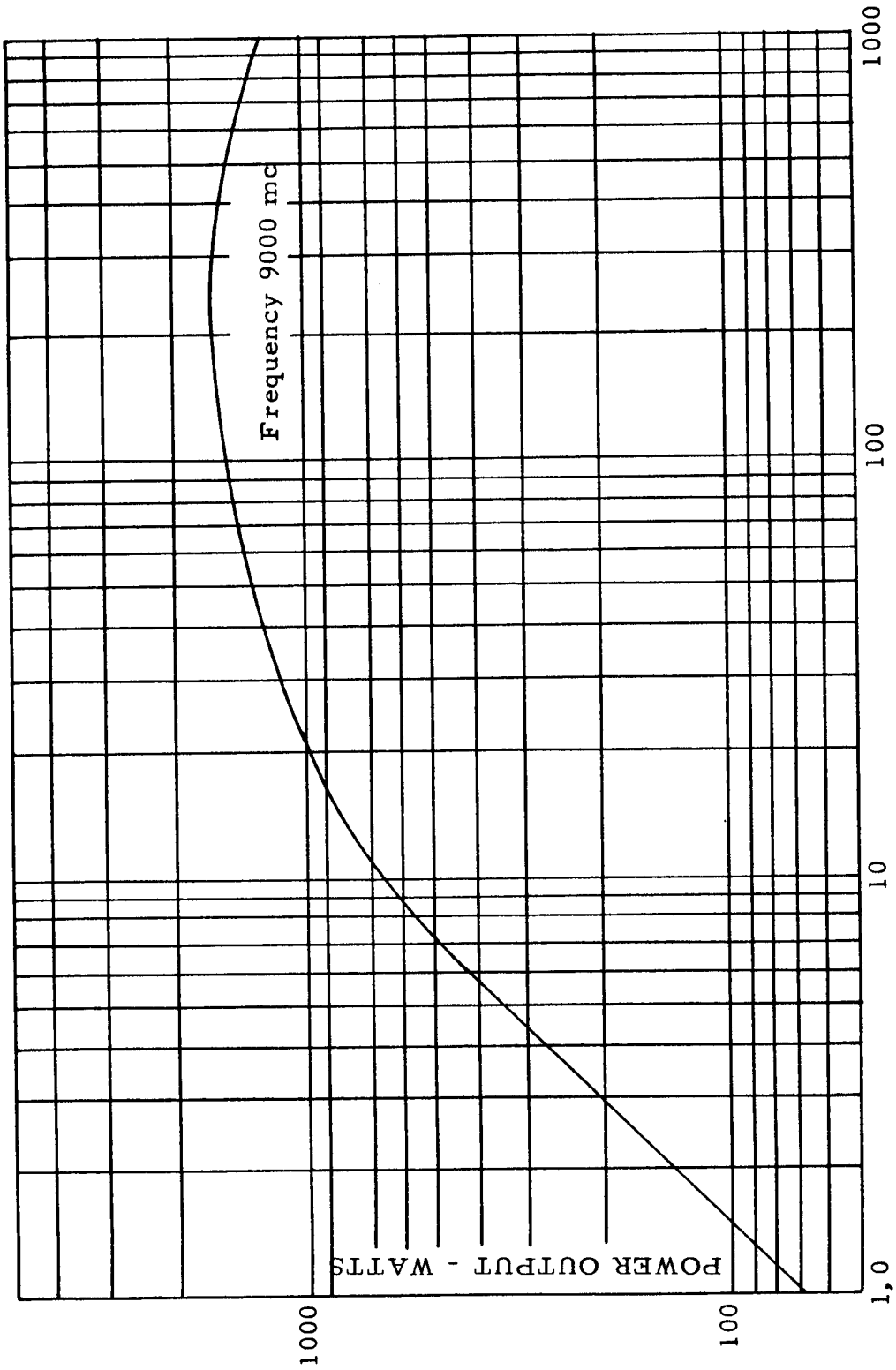

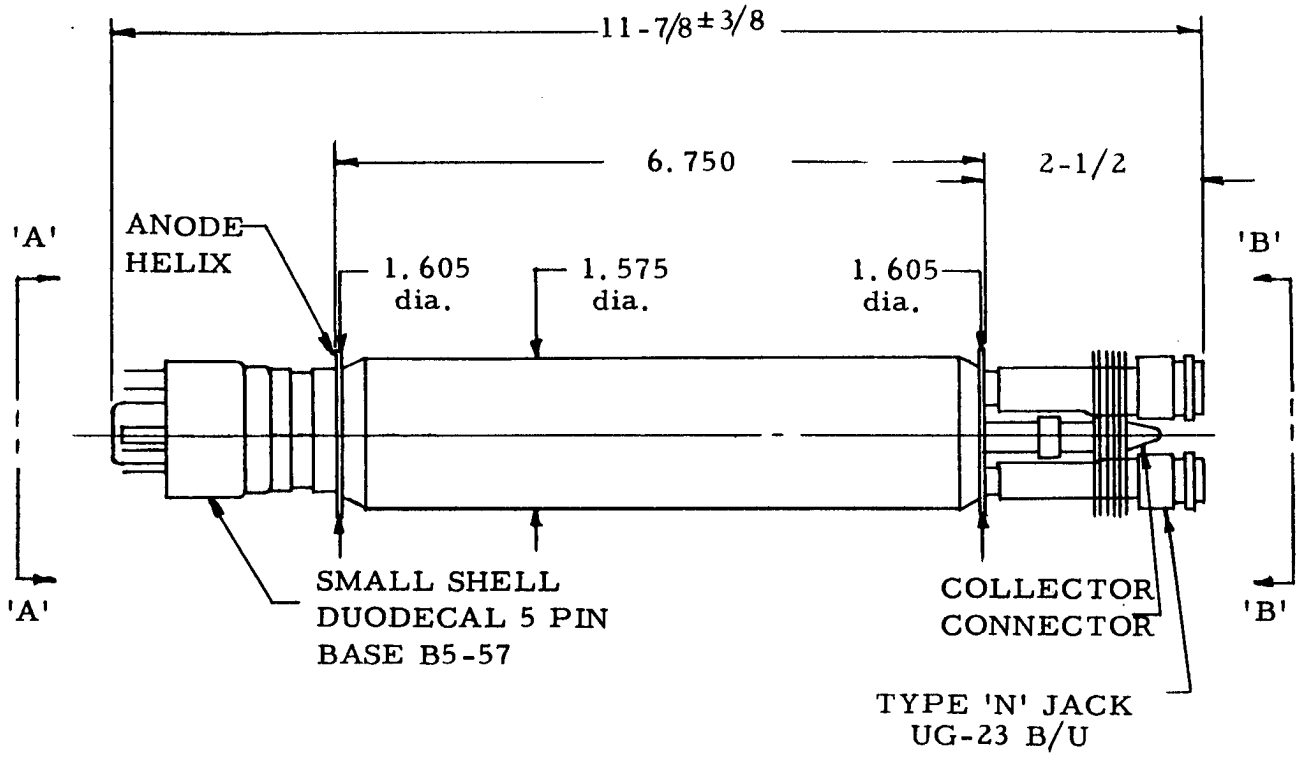

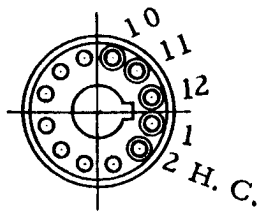

VIEW 'A-A'

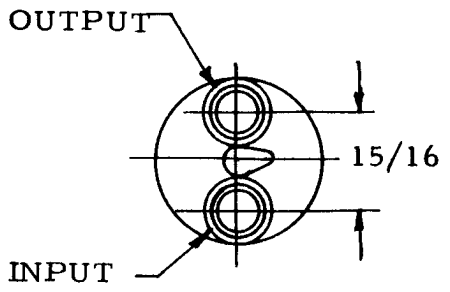

VIEW 'B-B'

BASING

PIN	ELEMENT
1	No Conn.
2	Heater-Cathode
10	Heater
11	No conn.
12	No conn.

OUTLINE

TRAVELING WAVE TUBE F-7339

ELECTRON TUBE DEPARTMENT ■ COMPONENTS DIVISION
INTERNATIONAL TELEPHONE AND TELEGRAPH CORPORATION, CLIFTON, NEW JERSEY

F-7340 TRAVELING WAVE TUBE

(FORMERLY D-95)

DESCRIPTION:

The F-7340 is a 1 kilowatt pulse traveling wave amplifier tube having 30 db gain and 8000 to 9600 mc frequency range. It is constructed in a rugged metal envelope with a helix type slow wave structure. The integral matching circuit is in 50 ohm coaxial line and is provided with type 'N' connectors. The tube is self-aligning in the external solenoid which is required to provide a uniform magnetic field. A convergent beam gun and oxide impregnated cathode are used. Duty cycles up to .005 and pulse lengths up to 10 microseconds can be used.

A control grid suitable for grid pulsing is provided.

ELECTRICAL RATINGS, ABSOLUTE VALUES:

Heater Voltage	6.3 (±5%)	volts
Heater Current	5.2	amperes
Maximum Anode Voltage (Note 1)	12,000	volts
Maximum Shell Current	1.5	ampere peak
Maximum Collector Dissipation (Note 2)	180	watts average
Maximum R-F Input Power	10	watts average
Maximum R-F Output Power	10	watts average
Maximum Duty Cycle	.005	
Maximum Pulse Width	10	μ seconds
Maximum Cathode Current	3.0	amperes peak
Maximum Grid Voltage		
Negative	-300	volts
Positive (Note 5)	+450	volts
Maximum Grid Current	.27	ampere peak

ELECTRICAL INFORMATION:

Maximum Frequency (Note 3)	9600	mc
Minimum Frequency (Note 3)	8000	mc
Minimum Transmission Loss		
at Grid Bias = -200 volts	60	db

ELECTRICAL INFORMATION (Continued)

Capacitance		
Control Grid to All Other Elements	9	μμfd

MECHANICAL INFORMATION:

Type of Cathode	Oxide Impregnated Unipotential	
Base (Note 8)	JEDEC Designation B6-65	
Molded Silicone Rubber Base with Flying Leads or Small Shell Duodecal, 6 Pin		
Type of Envelope		Metal
Magnetic Field Strength	2400	gauss
Length of Magnetic Field	6.75	inches uniform
Mounting Position		Any
Weight of Tube	1 lb.	7 oz.
R-F Connections (Note 8)	Type N Jack	UG-23 B/U
Type of Cooling	Forced Air	
Air Flow on Collector Radiator (Note 2)	300	cfm
Maximum Glass Temperature	160	°C

TYPICAL OPERATION AS POWER AMPLIFIER:

Center Frequency	9000	mc
Anode Voltage (Note 1)	9600	volts
Cathode Current	1.8	amperes peak
Power Output (at center frequency)	1.8	kw peak
Bandwidth	8.0 to 9.6	kmc
Gain (Note 4)	30	db
Duty	.001	
Pulse Width	2.0	μ seconds
Grid Bias (for cut-off)	-100	volts
Grid Voltage during Pulse (Note 6)	+350	volts
Grid Current during Pulse	0.1	ampere peak

Note 1: All voltages shown are with respect to cathode. Anode and helix are connected internally to the shell. Helix connection is center conductor of coax. Shell is normally operated at ground potential and connection is made to the shell of the solenoid.

Note 2: Forced air cooling is required for average collector power in excess of 10 watts. As the collector power is increased, the air flow required increases. At the maximum collector power of 150 watts, a minimum air flow of 30 cfm through the cooling fins is required.

Note 3: Useful gain and power output exists below 8000 mc and above 9600 mc and can be utilized by adjusting anode voltage to optimize the frequency range desired. However, bandwidth cannot be extended both upward and downward simultaneously and maximum gain and power output outside the normal bandwidth will be lower than rated values.

Note 4: This gain is obtained over the 8.0 to 9.6 kmc bandwidth at the power level indicated. Since this is in the power saturation region, small signal gain will be approximately 10 db higher. Fine grain structure of small signal gain is normally less than ± 3 db.

Note 5: Positive voltage must not be applied to the grid in the absence of anode voltage.

Note 6: The positive grid voltage pulse should be the minimum consistent with normal power output.

Note 7: Mismatch up to and including a short circuit in input or output lines will not cause oscillation.

Note 8: Unless otherwise specified on Purchase Order, tube will be provided with small shell duodecal base and type N jack. Waveguide flange, UG 40 A/U, r-f connections can also be provided.

GENERAL OPERATING INSTRUCTIONS:

(1) Heater warm up of 2 minutes before applying high voltage is recommended.

(2) High voltage must not be applied in the absence of proper grid bias and magnetic field. Positive grid pulse voltage must not be applied in the absence of high voltage.

(3) Initial adjustments should be done at low duty cycle (less than .001) to prevent tube damage dùe to high shell (interception) current.

Additional information for specific applications can be obtained from the

Electron Tube Applications Section
ITT Components Division
P. O. Box 412
Clifton, New Jersey

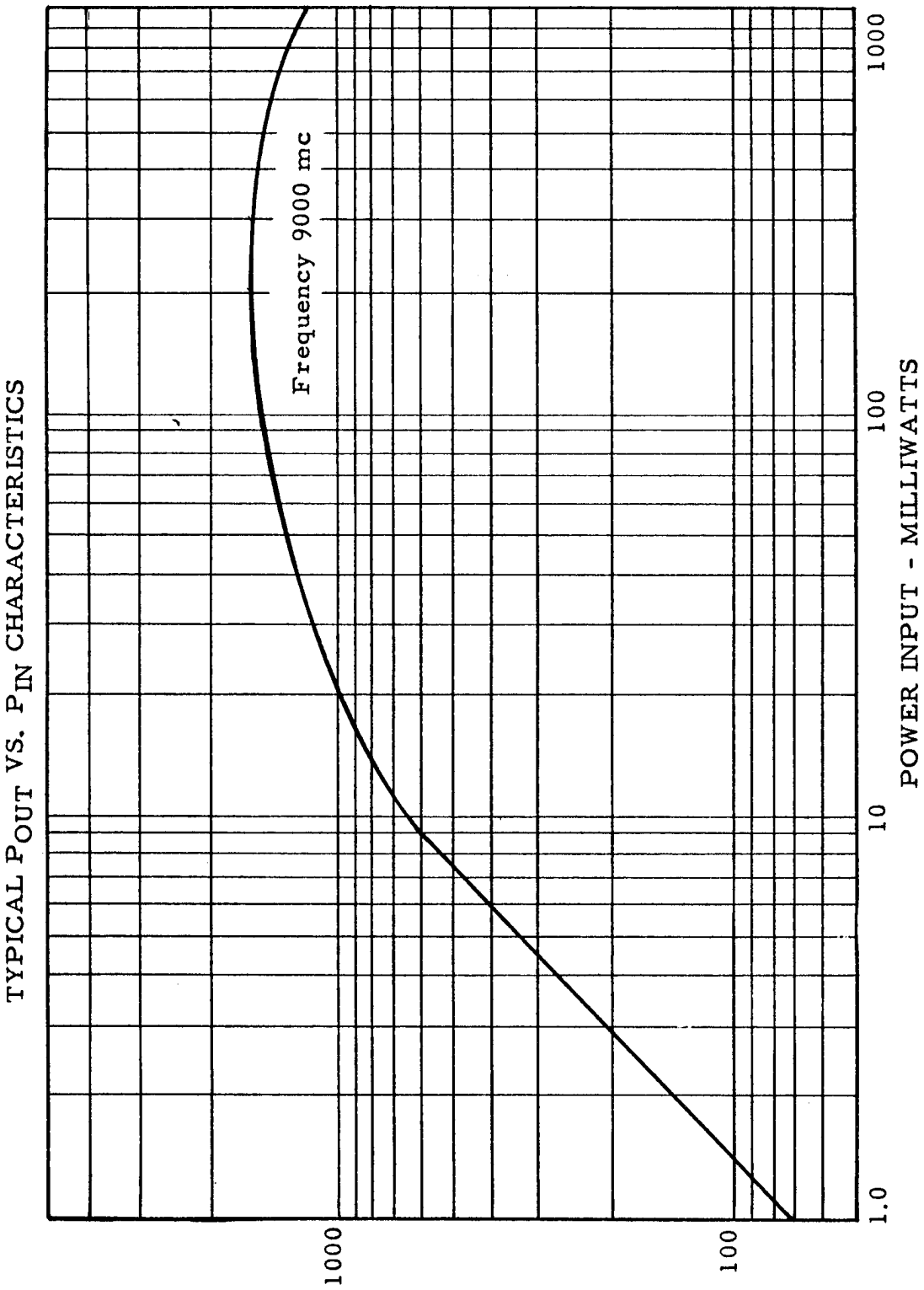
TYPICAL POUT VS. PIN CHARACTERISTICS
Frequency 9000 mc
POWER INPUT - MILLIWATTS
1000
100
10
1.0
1000
100

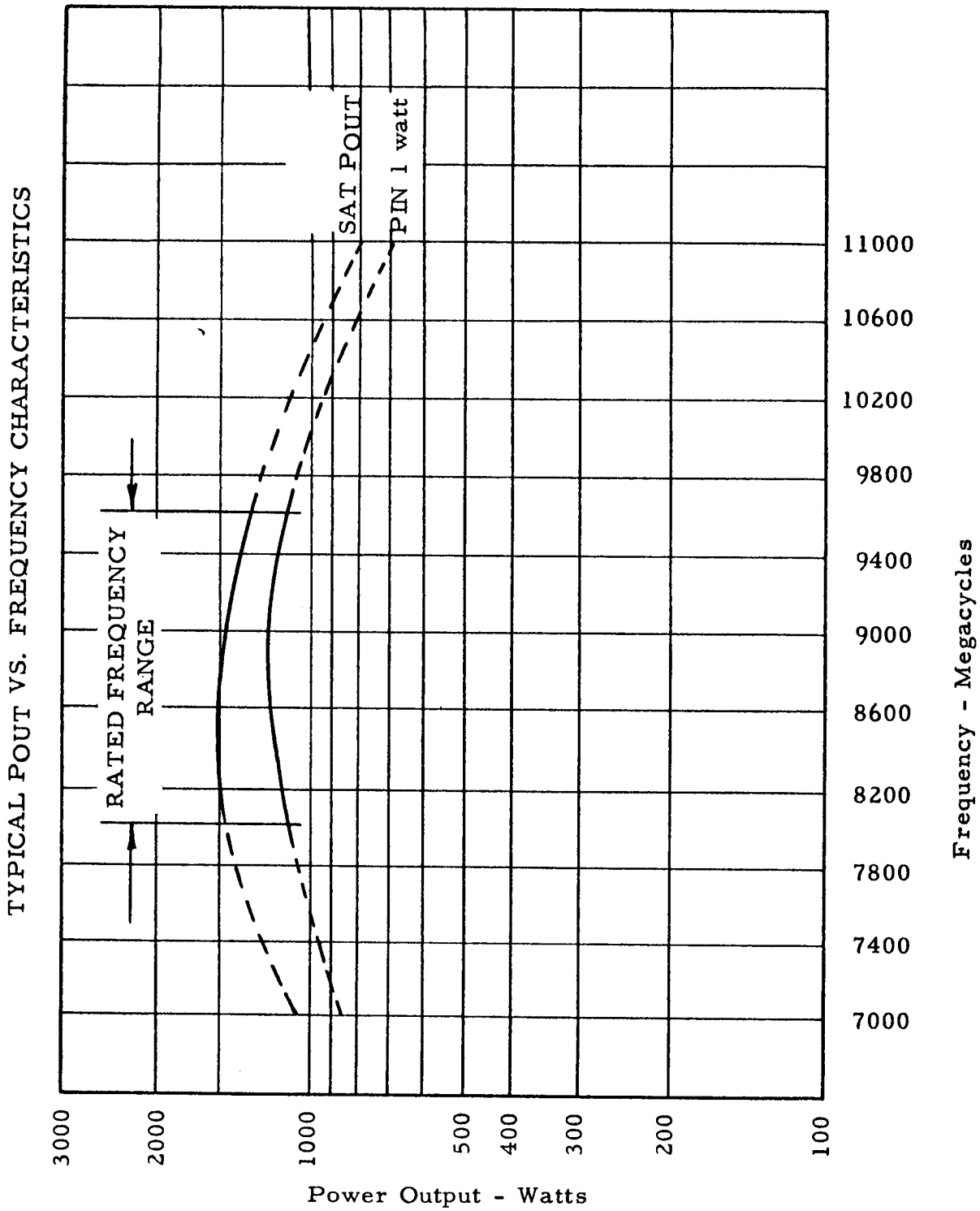
TYPICAL POUT VS. FREQUENCY CHARACTERISTICS
SAT POUT
PIN 1 watt
RATED FREQUENCY RANGE
11000
10600
10200
9800
9400
9000
8600
8200
7800
7400
7000
Frequency - Megacycles
3000
2000
1000
500
400
300
200
100
Power Output - Watts

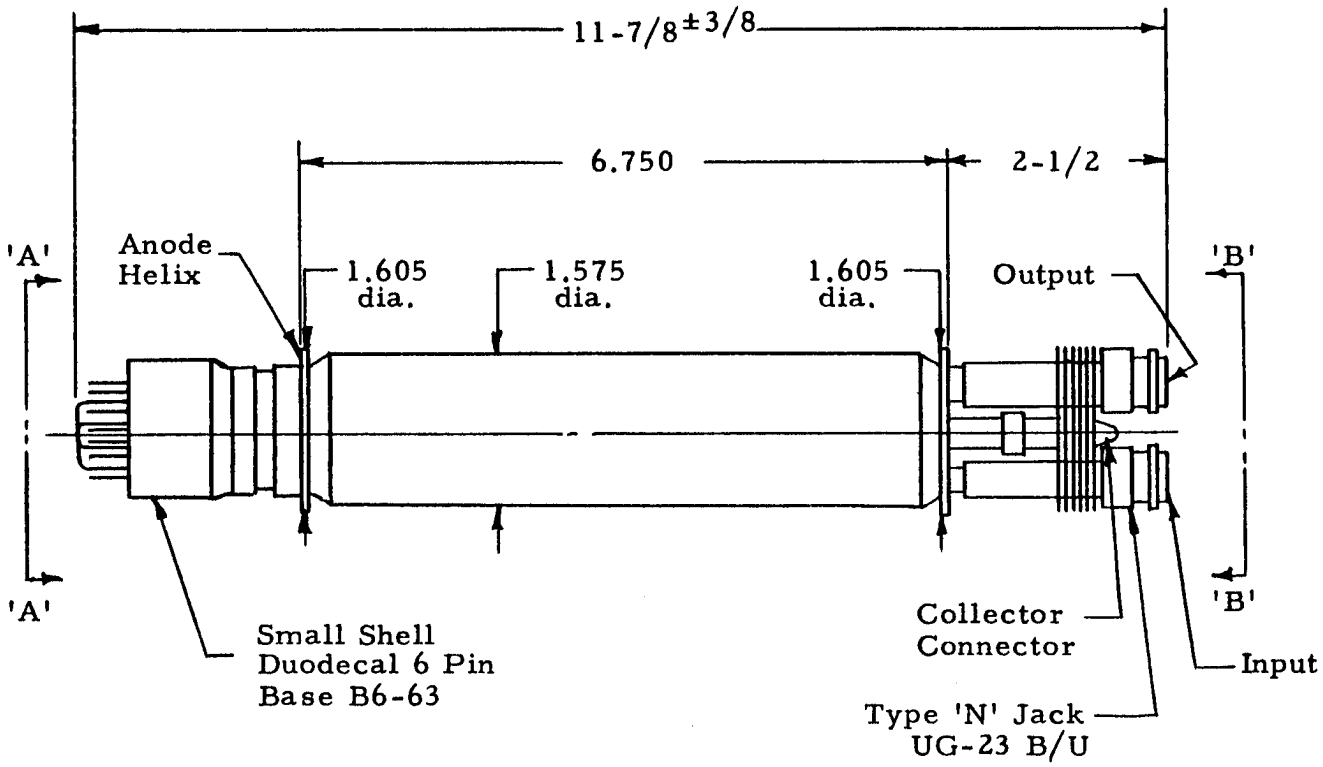

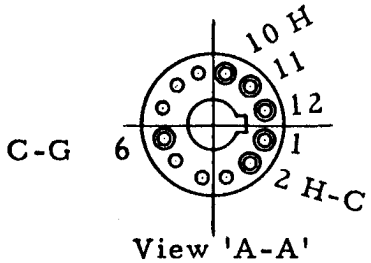

BASING

PIN	ELEMENT
1	No conn.
2	Heater-Cathode
6	Control Grid
10	Heater
11	No conn.
12	No conn.

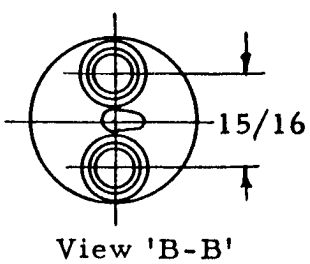

OUTLINE

TRAVELING WAVE TUBE F-7340

TENTATIVE

DESCRIPTION:

The F-7341 is a 5 watt pulse traveling wave amplifier tube having 25 db gain and 8000 to 9600 mc frequency range. It is constructed in a rugged metal envelope with a helix type slow wave structure. The integral matching circuit is in 50 ohm coaxial line and is provided with type "N" connectors. The tube is self-aligning in the external solenoid which is required to provide a uniform magnetic field. A convergent beam gun and oxide impregnated cathode are used.

The tube is mechanically and electrically similar to type F-6996 except that a mesh type grid, suitable for grid pulsing, is provided in place of the focus element used in F-6996. Operation is limited by this grid to pulse service, at a miximum duty cycle of .04.

ELECTRICAL RATINGS, ABSOLUTE VALUES

Heater Voltage	6.3 (±10%)	volts
Heater Current	2.3	amperes
Maximum Anode Voltage (Note 1)	3400	volts
Maximum Shell Current (Note 2)	20	ma peak
Maximum Collector Voltage (Note 3)	3500	volts
Maximum Collector Dissipation (Note 4)	10	watts
Maximum Duty Cycle	.04	
Maximum Grid Voltage (Note 5)		
Negative	-100	volts
Positive	+150	volts peak
Maximum Grid Current	6	ma peak

ELECTRICAL INFORMATION:

Minimum Frequency	8000	mc
Maximum Frequency	9600	mc
Minimum Cold Insertion Loss (Note 7)	50	db
Capacitance - Grid to all other elements	15	μμf max.

* Formerly Type D-2004

MECHANICAL INFORMATION:

Type of Cathode	Oxide Impregnated Unipotential	
Base, Small Shell Duodecal, 6 Pin (Note 6)	JETEC B6-63	
Type of Envelope		Metal
Magnetic Field Strength	1000	gauss
Length of Magnetic Field	6.75	inches uniform
Mounting Position		Any
Weight (not including magnet)	1 lb.	7 oz.
R-F Input and Output Impedance	50	ohm coax.
Type Connector	Type "N" Jack UG-23 B/U	
Type of Cooling	See Note 4	
Glass Temperature	160	°C max.

TYPICAL OPERATION AS POWER AMPLIFIER:

Anode Voltage	3200	volts
Shell Current	10	ma peak
Collector Voltage	3200	volts
Collector Current	50	ma peak
Grid Voltage		
Bias	0	volts
Applied Voltage Pulse	120	volts peak
Grid Current	3	ma peak
Power Output	5	watts nominal
Gain	25	db nominal
Duty Cycle	.03	

Note 1: All voltages shown are with respect to cathode. The shell is normally operated at approximately ground potential and the d-c connection is made to the shell of the solenoid. Anode and helix are connected internally to the shell.

Note 2: Initial adjustments of voltage and magnetic field may be made at low duty cycles. 20 ma shell current must not be exceeded at maximum duty cycle (.04).

Note 3: The collector is normally connected to the shell. A viewing resistor (recommended not to exceed 200 ohms) can be conveniently inserted in this connection.

Note 4: Convection cooling of the tube is adequate at sea level and ambients below 30°C when air circulation is not restricted. Under more severe environments, 10 cfm (or equivalent at altitudes) should be provided through the collector radiator. Cooling provisions for the solenoid are separate from the tube requirement.

Note 5: Positive voltage must not be applied to the grid in the absence of anode voltage.

Note 6: A molded silicone rubber base, with flying leads, can be provided where altitude conditions must be met.

Note 7: The minimum cold insertion loss applies for grid voltage of -10 volts or more negative.

Additional information for specific applications can be obtained from the

Electron Tube Applications Section
ITT Components Division
P. O. Box 412
Clifton, New Jersey

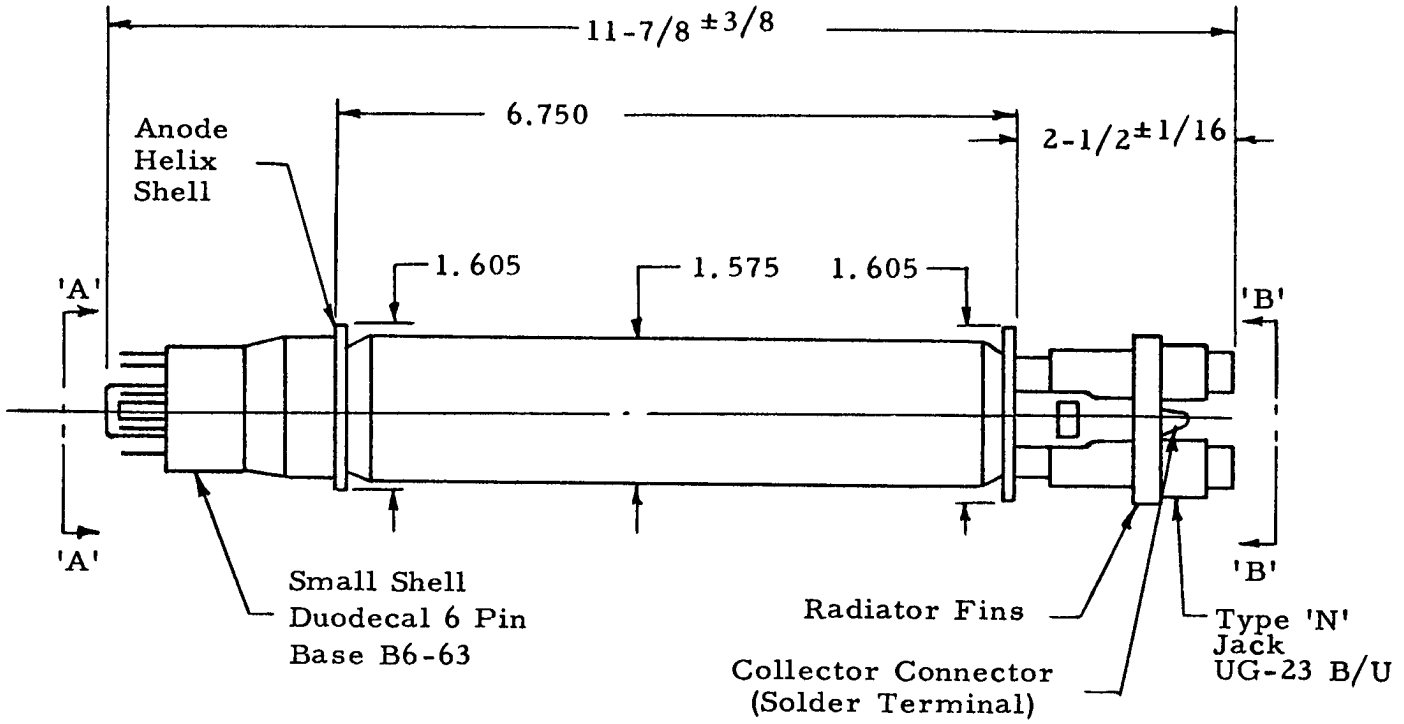

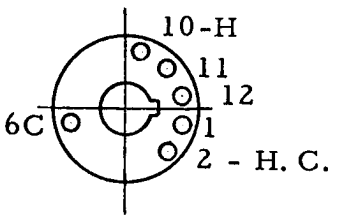

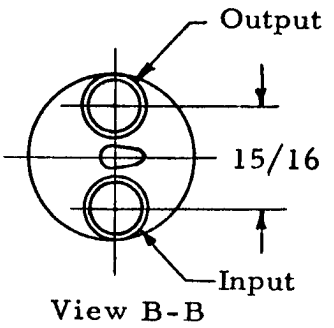

View B-B

BASING

PIN	ELEMENT
1	No Conn.
2	Heater-Cathode
6	Grid
10	Heater
11	No conn.
12	No conn.

OUTLINE

F-7347 TRAVELING WAVE TUBE

rmerly D-2001

DESCRIPTION:

The F-7347 is a 1 kilowatt pulse traveling wave amplifier tube having 30 db gain and 2000 to 4000 mc frequency range. It is constructed in a rugged metal-ceramic envelope with a helix type slow wave structure. The integral matching circuit is in 50 ohm coaxial line and is provided with female type TNC connectors. The tube is self-aligning in an external solenoid which is required to provide a uniform magnetic field. A convergent beam gun and oxide impregnated cathode are used. Duty cycles up to .005 and pulse lengths up to 10 microseconds can be used.

A control grid suitable for grid pulsing is provided.

ELECTRICAL RATINGS, ABSOLUTE VALUES:

Heater Voltage	6.3 (±6%)	volts
Heater Current	5.2	amperes
Maximum Anode Voltage (Note 1)	8000	volts
Maximum Helix Current	0.5	ampere peak
Maximum Collector Dissipation (Note 2)	100	watts average
Maximum R-F Input Power	10	watts average
Maximum R-F Output Power	15	watts average
Maximum Duty Cycle	.005	
Maximum Cathode Current	2.5	amperes peak
Maximum Grid Voltage		
Negative	-300	volts
Positive (Note 5)	+400	volts
Maximum Grid Current	.5	ampere peak

ELECTRICAL INFORMATION:

Maximum Cold Input VSWR (Note 7)	4.0	
Maximum Frequency (Note 3)	4000	mc
Minimum Frequency (Note 3)	2000	mc

ELECTRICAL INFORMATION (Continued)

Minimum Transmission Loss at Grid Bias = -67 volts	10	db
Capacitance		
Control grid to all other elements	22	μμfd

MECHANICAL INFORMATION:

Type of Cathode	Oxide Impregnated Unipotential	
Base	Molded Silicone Rubber Base with Flying Leads	
Type of Envelope	Metal-Ceramic	
Magnetic Field Strength	1200	guass
Length of Magnetic Field	9.493	inches uniform
Mounting Position	Any	
Weight of Tube	1.5	lbs., approx.
R-F Connections	Type N Jack	UG-23 B/U
Maximum Tube Temperature	177	°C

TYPICAL OPERATION AS POWER AMPLIFIER:

Center Frequency	3000	mc
Anode Voltage (Note 1)	7500	volts
Cathode Current	1.8	amperes peak
Power Output (at center frequency)	1.8	kw peak
Bandwidth	2.0 to 4.0	kmc
Gain (Note 4)	30	db
Duty	.002	
Pulse Width	10	μ seconds
Grid Bias (for cut-off)	-100	volts
Grid Voltage during Pulse (Note 6)	+300	volts
Grid Current during Pulse	0.2	ampere peak

Note 1: All voltages shown are with respect to cathode. Anode and collector are connected internally to the shell. Helix connection is center conductor of coax. External d-c connection is required between shell and helix. Shell is normally operated at ground potential and connection is made to the shell of the solenoid.

Note 2: Conduction cooling for the collector must be provided by a suitable device.

Note 3: Useful gain and power output exists below 2000 mc and above 4000 mc and can be utilized by adjusting anode voltage to optimize the frequency range desired. However, bandwidth cannot be extended both upward and downward simultaneously and maximum gain and power output outside the normal bandwidth will be lower than rated values.

Note 4: This gain is obtained over the 2.0 to 4.0 kmc bandwidth at the power level indicated. Since this is in the power saturation region, small signal gain will be approximately 10 db higher.

Note 5: Positive voltage must not be applied to the grid in the absence of anode voltage.

Note 6: The positive grid voltage pulse should be the minimum consistent with normal power output; otherwise shortened life or destruction of the tube may result.

Note 7: Mismatch up to and including a short circuit in input or output lines will not cause oscillation.

GENERAL OPERATING INSTRUCTIONS:

(1) Heater warm up of 2 minutes before applying high voltage is recommended.

(2) High voltage must not be applied in the absence of proper grid bias and magnetic field. Positive grid pulse voltage must not be applied in the absence of high voltage.

(3) Initial adjustments should be done at low duty cycle (less than .001) to prevent tube damage due to high shell (interception) current.

Additional information for specific applications can be obtained from the

Electron Tube Applications Sections
ITT Components Division
P.O. Box 412
Clifton, New Jersey

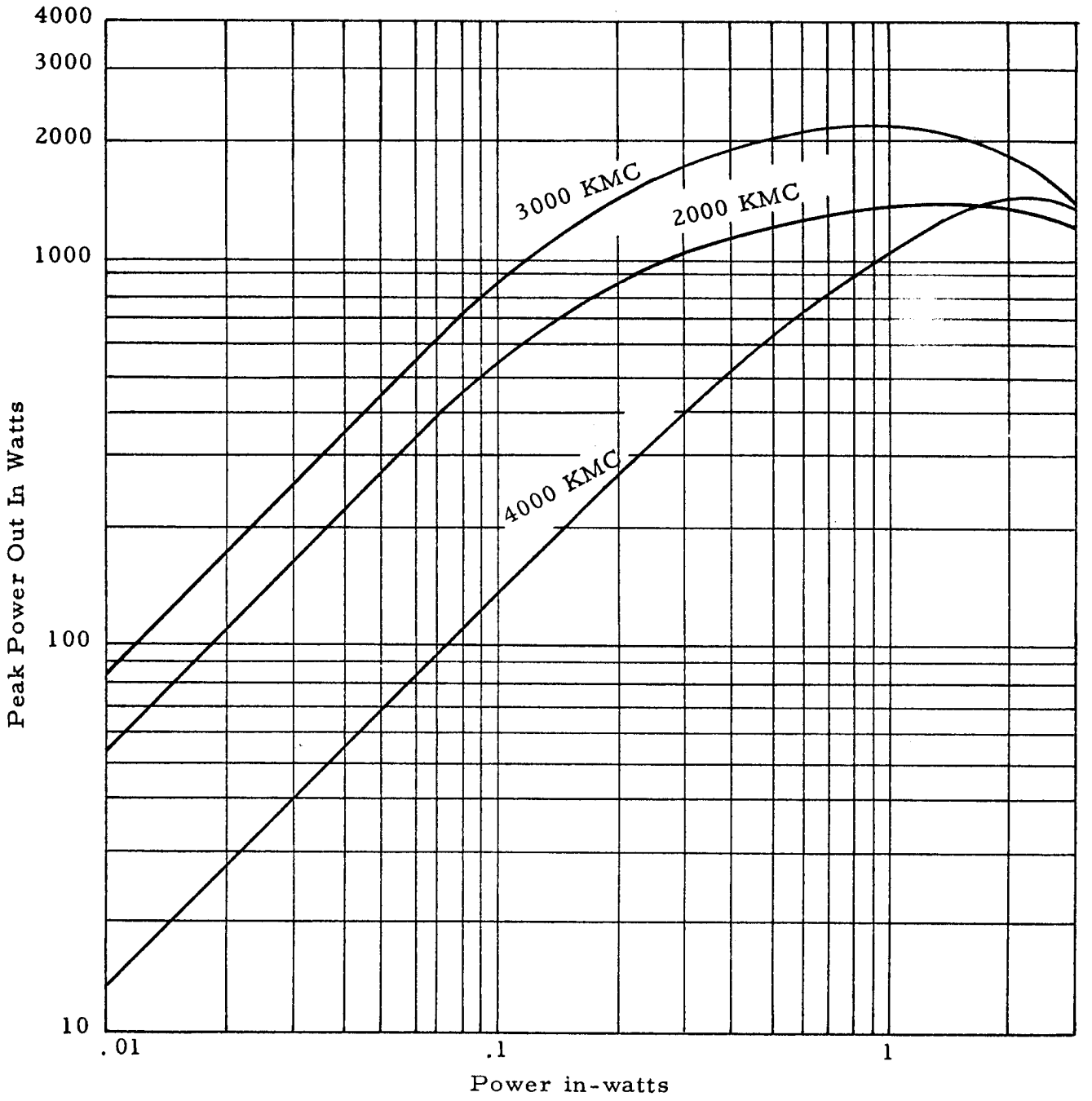

TYPICAL POWER IN-POWER OUT CHARACTERISTIC

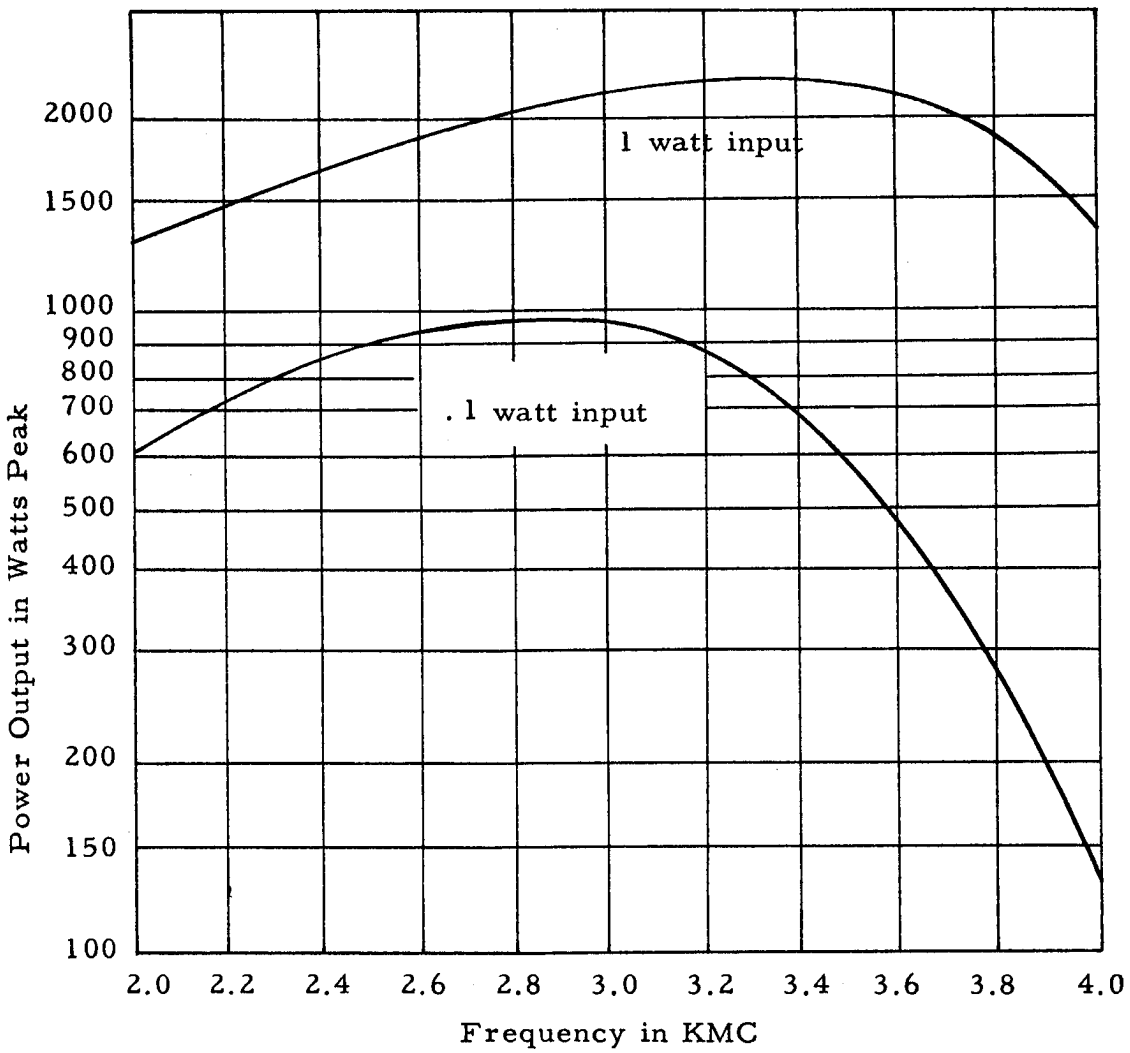

TYPICAL P_{out} VS FREQUENCY CHARACTERISTIC

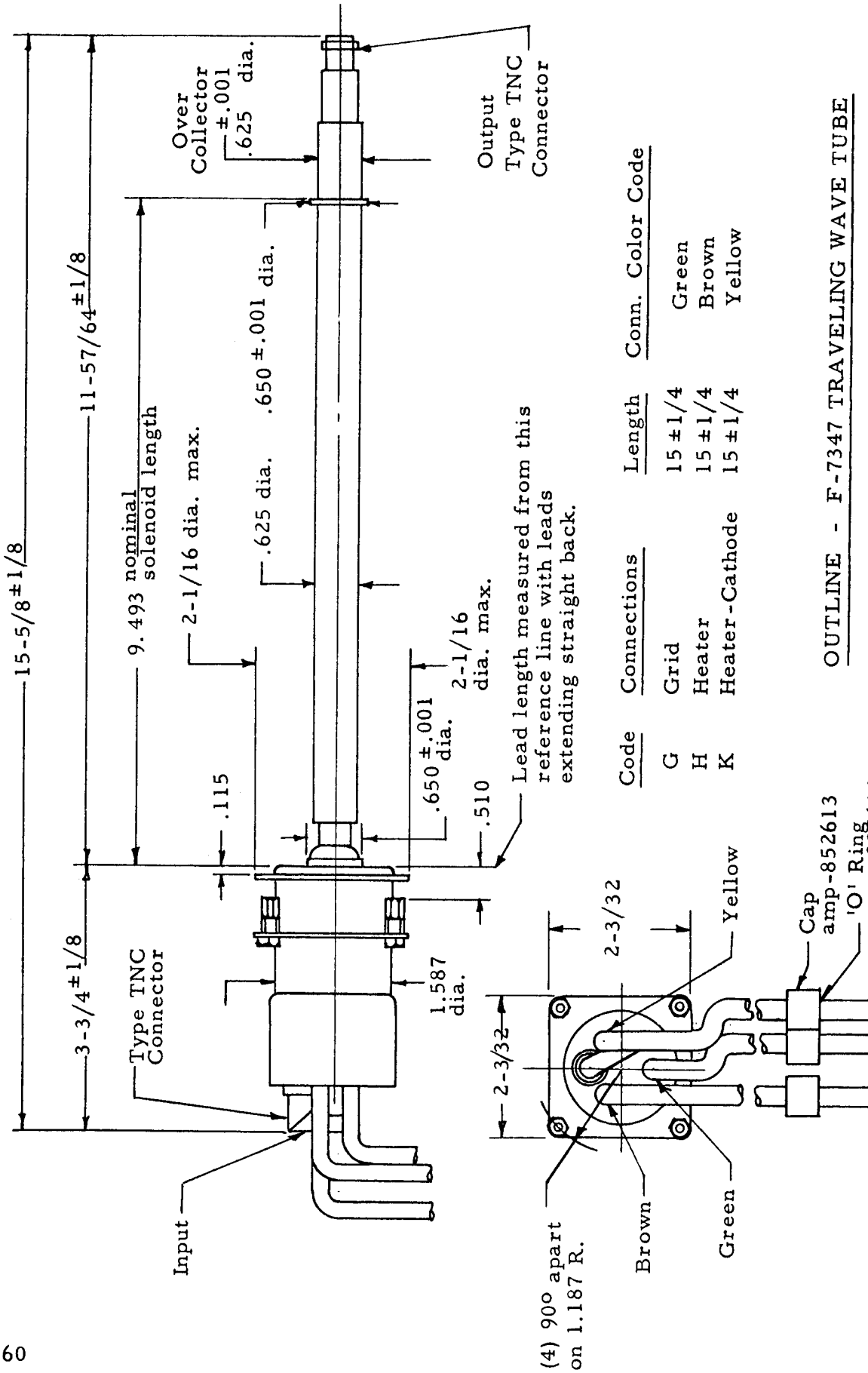

Code	Connections	Length	Conn. Color Code
G	Grid	15 ±1/4	Green
H	Heater	15 ±1/4	Brown
K	Heater-Cathode	15 ±1/4	Yellow

OUTLINE - F-7347 TRAVELING WAVE TUBE

ELECTRON TUBE DEPARTMENT ■ COMPONENTS DIVISION
INTERNATIONAL TELEPHONE AND TELEGRAPH CORPORATION, CLIFTON, NEW JERSEY

TENTATIVE

DESCRIPTION:

THE F-7423 IS A 5 INCH IATRON (DIRECT VIEW STORAGE CATHODE-RAY TUBE) THAT PRODUCES A BRIGHT VISUAL DISPLAY OF ELECTRICALLY STORED INFORMATION. IT IS ELECTROSTATICALLY FOCUSED AND DEFLECTED. THE TUBE DISPLAYS BRIGHT IMAGES THAT CAN BE VIEWED IN DIRECT DAYLIGHT, AND THE TUBE FEATURES THE ABILITY TO WRITE, STORE AND ERASE SIGNAL INFORMATION AT THE WILL OF THE OPERATOR. GRAY SHADES ARE PRODUCED IN ACCORDANCE WITH THE AMPLITUDE VARIATIONS OF THE INPUT SIGNAL. THE TUBE HAS TWO ELECTRON GUNS, A WRITING GUN WHICH WRITES THE INPUT SIGNAL ON AN INSULATOR STORAGE SCREEN, AND A FLOOD GUN WHICH ILLUMINATES THE PHOSPHOR IN ACCORDANCE WITH THE STORED SIGNAL.

GENERAL:

DIMENSIONS	SEE OUTLINE ATTACHED
NOMINAL TUBE DIAMETER	5 INCHES
MINIMUM USEFUL DISPLAY DIAMETER	4 INCHES
PHOSPHOR	P-20 ALUMINIZED
OPERATING POSITION	ANY
WEIGHT (APPROXIMATE)	2 LB. 8 OZ.
CATHODE PRE-HEATING TIME	30 SECONDS
FOCUS METHOD	ELECTROSTATIC
DEFLECTION METHOD	ELECTROSTATIC

MAXIMUM RATINGS:

	FLOOD SECTION
VIEWING SCREEN	±10 KV
BACKING ELECTRODE	±25 V
COLLECTOR	±250 V
ANODE #4	±150 V
ANODE #3	±150 V
ANODE #2	±150 V
ANODE #1	±80 V
HEATER-CATHODE VOLTAGE	±125 V

* TRADEMARK OF INTERNATIONAL TELEPHONE AND TELEGRAPH CORPORATION

WRITE SECTION

WRITE CATHODE	-1000 V	
GRID #1	NEGATIVE VOLTAGE RESPECT WRITE CATHODE	150 V
	POSITIVE VOLTAGE RESPECT WRITE CATHODE	0 V
GRID #2	∔150 V	
GRID #3	∔500 V	RESPECT WRITE CATHODE
HEATER-CATHODE VOLTAGE	±125 V	
GRID #2 TO ANY DEFLECTING ELECTRODE	±500 V	

TYPICAL OPERATING VALUES:

FLOOD SECTION

VIEWING SCREEN	∔8.5	KV DC	2 MA (MAX.)
BACKING ELECTRODE	∔10	VDC	
COLLECTOR	∔180	VDC	2 MA (MAX.)
ANODE #4	∔90	VDC	1.5 MA (MAX.)
ANODE #3	∔20	VDC	1.5 MA (MAX.)
ANODE #2	∔30	VDC	1.8 MA (MAX.)
ANODE #1	∔60	VDC	5.0 MA (MAX.)
FLOOD CATHODE	0	VDC	10.0 MA (MAX.)
HEATER	6.3	V AC OR DC	1.4 A

WRITE SECTION

WRITE CATHODE	-750	VDC	3.0 MA (MAX.)
GRID #1 CUTOFF (NOTE 1)	-60	VDC	RESPECT WRITE CATHODE
GRID #2	0	VDC	
GRID #3	∔165	VDC	RESPECT WRITE CATHODE
HEATER	6.3	V AC OR DC	.6 A
MEAN DEFLECTION PLATE VOLTAGE	0	V	

RANGE OF TYPICAL OPERATING ADJUSTMENTS:

ANODE #2	25 TO 35	VDC	ADJUST FOR BEST COLLIMATION
ANODE #3	15 TO 30	VDC	ADJUST FOR BEST COLLIMATION
GRID #1 CUTOFF (NOTE 1)	-40 TO -85	VDC	
GRID #3 FOCUS	105 TO 210	VDC	ADJUST FOR BEST FOCUS
ERASE PULSES	0 TO 10		VOLT AMPLITUDE, 1 USECOND WIDE, 100-5000 PRF - ADJUST FOR DESIRED VIEWING TIME.

* TRADEMARK OF ITT

TYPICAL PERFORMANCE.

RESOLUTION (NOTE 2)		
50% OF FULL BRIGHTNESS	40	LINES/INCH
BRIGHTNESS	4,000	FT. LAMBERTS
WRITING SPEED		
20 VOLT DRIVE TO 50% BRIGHTNESS	20,000	INCHES/SECOND
40 VOLT DRIVE TO 50% BRIGHTNESS	40,000	INCHES/SECOND
ERASE TIME (NOTE 3)	12	MILLISECONDS
VIEWING TIME (NOTE 4)	10	SECONDS
STORAGE TIME (NOTE 5)	20	SECONDS
DEFLECTION FACTOR		
D1-D2	40-49	VOLTS/INCH
D3-D4	38-47	VOLTS/INCH
HALF-TONE STEPS	4	(MINIMUM)

ENVIRONMENTAL DATA:

AMBIENT TEMPERATURE RANGE		
OPERATING	-55° TO +71°	C
NON-OPERATING	-65° TO +100°	C
ALTITUDE	70,000	FEET
VIBRATION (CONTINUOUS)	3G, 5	CPS TO 500 CPS
SHOCK (3 AXES)		
OPERATING	15G FOR 40	MS, 18 IMPACTS
OPERATING	25G FOR 5	MS, 6000 IMPACTS
NON-OPERATING (CRASH SAFETY)	30G FOR 11	MS, 2 IMPACTS

NOTES:

1. VISUAL CUTOFF OF THE STORED, FOCUSED, UNDEFLECTED SPOT.

2. RESOLUTION IS MEASURED BY THE SHRINKING RASTER METHOD AT THE CENTER OF THE TUBE

3. ERASE TIME IS THE SHORTEST TIME IN WHICH A SIGNAL CAN BE REMOVED FROM THE TUBE AFTER BEING STORED AT FULL BRIGHTNESS.

4. VIEWING TIME IS THE MINIMUM TIME THAT A SIGNAL STORED AT FULL BRIGHTNESS ANYWHERE IN THE DISPLAY AREAS CAN BE VIEWED WITH ERASE PULSES CONTINUOUSLY APPLIED TO COUNTERACT ION WRITING.

* TRADEMARK OF ITT

5. STORAGE TIME IS THE TIME REQUIRED FOR THE BRIGHTNESS TO INCREASE FROM CUTOFF TO 50 PER CENT OF FULL VALUE IN THE ABSENCE OF ERASE PULSES.

SPECIAL PRECAUTIONS:

OBSERVE MAXIMUM RATINGS TO AVOID POSSIBLE DAMAGE TO THE TUBE. IN PARTICULAR THE VIEWING SCREEN VOLTAGE SHOULD BE LIMITED SO AS TO NEVER EXCEED 10 KV. THE FULL VOLTAGE SHOULD NOT BE APPLIED TO THE VIEWING SCREEN INSTANTANEOUSLY. AN ORDINARY RC FILTER AT THE OUTPUT OF THE POWER SUPPLY WILL PROVIDE ADEQUATE ASSURANCE THAT THE VOLTAGE BUILD UP WILL NOT BE TOO ABRUPT. THE MINIMUM RESISTANCE OF THE HIGH VOLTAGE CIRCUIT SHOULD BE 1 MEG OHM.

REPEATED BOMBARDMENT WITH A HIGH CURRENT FOCUSED WRITING BEAM ON A SMALL AREA OF THE STORAGE SURFACE CAN BURN A DARK IMAGE INTO THE DISPLAY AREA, WHICH MAY REMAIN FOR SEVERAL HOURS OR EVEN PERMANENTLY. THEREFORE, DEFLECTION VOLTAGES SHOULD BE APPLIED BEFORE OPERATING THE WRITING BEAM.

ADDITIONAL INFORMATION FOR SPECIFIC APPLICATIONS CAN BE OBTAINED FROM THE

ELECTRON TUBE APPLICATIONS SECTION
ITT COMPONENTS DIVISION
POST OFFICE BOX 412
CLIFTON, NEW JERSEY

* TRADEMARK OF THE INTERNATIONAL TELEPHONE & TELEGRAPH CORPORATION

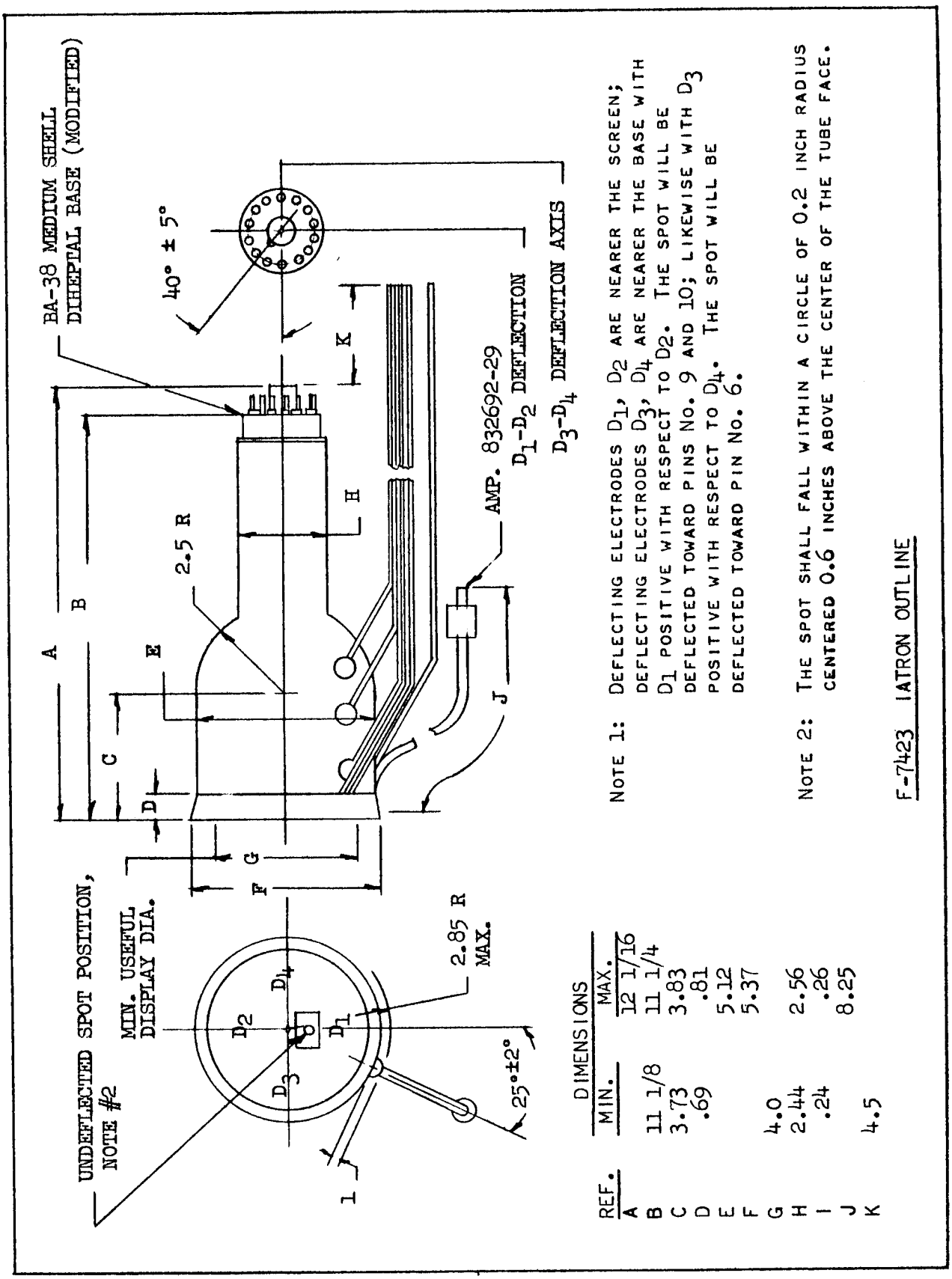

REF.	DIMENSIONS MIN.	MAX.
A		12 1/16
B	11 1/8	11 1/4
C	3.73	3.83
D	.69	.81
E		5.12
F		5.37
G	4.0	
H	2.44	2.56
I	.24	.26
J		8.25
K	4.5	

NOTE 1: DEFLECTING ELECTRODES D_1, D_2 ARE NEARER THE SCREEN; DEFLECTING ELECTRODES D_3, D_4 ARE NEARER THE BASE WITH D_1 POSITIVE WITH RESPECT TO D_2. THE SPOT WILL BE DEFLECTED TOWARD PINS No. 9 AND 10; LIKEWISE WITH D_3 POSITIVE WITH RESPECT TO D_4. THE SPOT WILL BE DEFLECTED TOWARD PIN No. 6.

NOTE 2: THE SPOT SHALL FALL WITHIN A CIRCLE OF 0.2 INCH RADIUS CENTERED 0.6 INCHES ABOVE THE CENTER OF THE TUBE FACE.

F-7423 IATRON OUTLINE

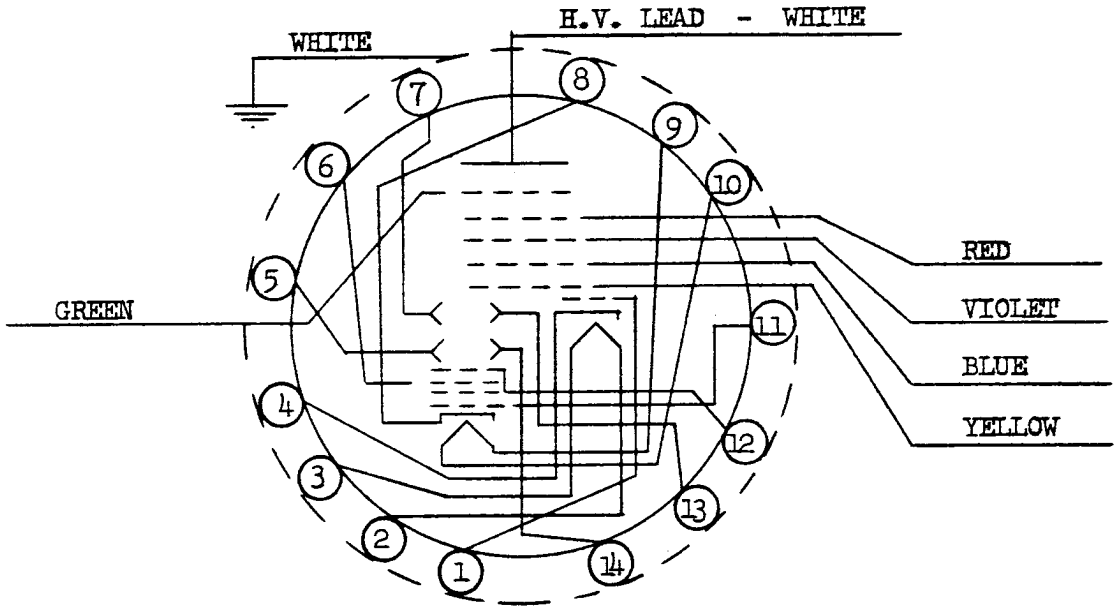

14 PIN BASE

1	ANODE #1
2	FLOOD HEATER
3	FLOOD HEATER
4	FLOOD CATHODE
5	D-3
6	GRID #3 (FOCUS)
7	D-1
8	WRITE CATHODE
9	WRITE HEATER
10	WRITE HEATER
11	GRID #1
12	GRID #2
13	D-2
14	D-4

FLYING LEADS

WHITE SMALL DIAMETER	ELECTROSTATIC SHIELD
WHITE LARGE DIAMETER	VIEWING SCREEN
YELLOW	ANODE #2
BLUE	ANODE #3
VIOLET	ANODE #4
RED	COLLECTOR
GREEN	BACKING ELECTRODE

F-7423 IATRON

ELECTRON TUBE DEPARTMENT ■ COMPONENTS DIVISION
INTERNATIONAL TELEPHONE AND TELEGRAPH CORPORATION, CLIFTON, NEW JERSEY

* F-7524 TRAVELING WAVE TUBE

TENTATIVE

DESCRIPTION:

The F-7524 is a 5 watt CW traveling wave amplifier tube having 20 db gain and 8.0 to 12.0 kmc frequency range. It is constructed in a rugged metal ceramic envelope with a helix type slow wave structure. The integral matching circuit is in 50 ohm coaxial line and is provided with female TNC connectors. The tube is self-aligning in the external solenoid which is required to provide a uniform magnetic field. A convergent beam gun and oxide impregnated cathode are used. The tube is suitable for either CW or pulse service.

ELECTRICAL RATINGS, ABSOLUTE VALUES:

Heater Voltage	6.3 (±5%)	volts
Heater Current	1.7	amperes
Maximum Anode Voltage (Note 1)	4000	volts
Maximum Helix Current (Note 2)	2	ma
Maximum Collector Dissipation (beam power)	240	watts
Maximum Control Electrode Voltage (Note 3)	-500	volts

ELECTRICAL INFORMATION:

Maximum Frequency	12.0	kmc
Minimum Frequency	8.0	kmc
Minimum Cold Transmission Loss	50	db
Capacitance		
Control Electrode to All Elements	10	μμf, max.

MECHANICAL INFORMATION:

Type of Cathode	Oxide Coated Unipotential	
Gun Connections	Flying Leads	
R-F Connections	Female TNC Connectors	
Magnetic Field Strength (nominal)	1200	gauss
Mounting Position	Any	
Weight (Tube only)	1	pound
Type of Cooling	Dependent on package	

* FORMERLY D-2005

TYPICAL OPERATION:

Anode Voltage	3600	volts
Anode Current	50	ma
Helix Current	0.5	ma
Control Electrode Voltage (Note 4)	-30	volts
Power Output	5	watts nominal
Gain	20	db nominal
Duty Cycle (Note 4)		
R-F	Variable to 1.0	
Beam	1.0	

Note 1: All voltages shown are with respect to cathode. Anode and collector are connected internally to the shell, and the outer coax conductor of the r-f connections is also at shell potential. The helix is connected to the center conductor of the coax line and a d-c connection to the helix must be provided externally in the r-f circuitry.

Note 2: The helix current should, in general, be minimized and must be less than the maximum rating. The control electrode voltage and magnetic field (solenoid current) can be properly adjusted before connection of r-f cables by monitoring current to the center coax conductor. It is desirable, when possible, to monitor this current during operation and to provide overload protection. In pulsed beam operation, the peak helix current may exceed 2 ma but care should be taken to operate at reasonably low values and average current must not exceed 2 ma.

Note 3: The control electrode voltage is adjusted for best transmission for CW operation (normally about -30 volts). Beam gate off can be accomplished by applying voltage of -400 to -500 volts. Operation in the region of control electrode voltage between approximately -50 volts and -400 volts is not permitted.

Note 4: Gated beam operation can also be utilized by applying -400 to -500 volts to the control electrode for gate off and approximately -30 volts (this value adjusted for best transmission) for gate on. In this type of operation, the values of power output, anode current, and helix current become peak values.

Additional information for specific applications can be obtained from the

Electron Tube Applications Section
ITT Components Division
Box 412 - Clifton, New Jersey

ELECTRON TUBE DEPARTMENT ■ COMPONENTS DIVISION
INTERNATIONAL TELEPHONE AND TELEGRAPH CORPORATION, CLIFTON, NEW JERSEY

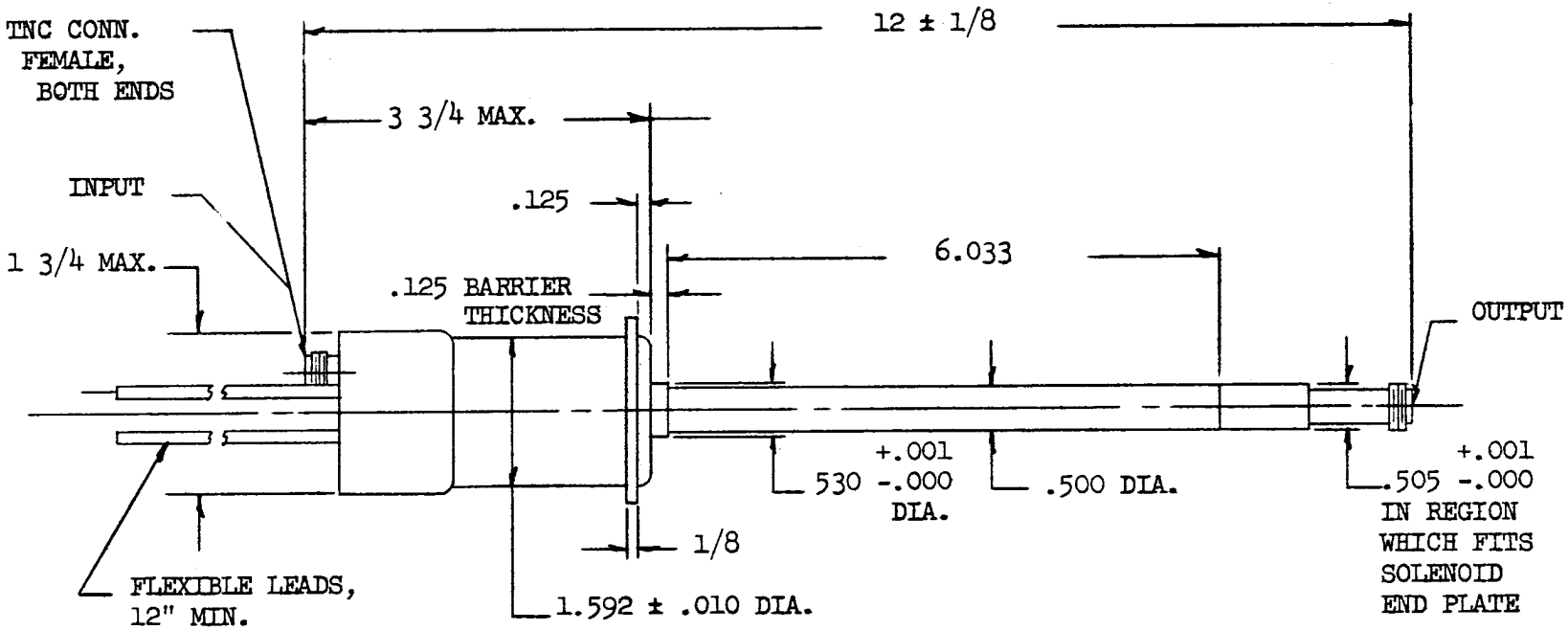

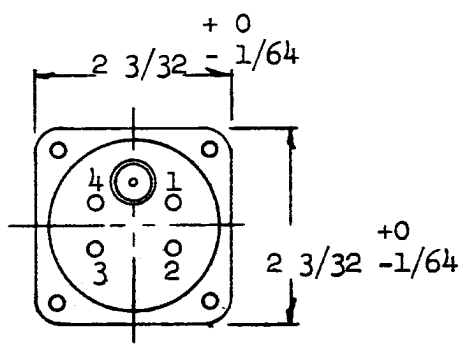

PIN	COLOR CODE	CONNECTIONS
2	GREEN	FOCUS
4	BROWN	HEATER
1	YELLOW	HEATER - CATHODE
3	BLACK	ANODE

OUTLINE F-7524 T.W.T.

* F-7525 TRAVELING WAVE TUBE

TENTATIVE

DESCRIPTION:

THE F-7525 IS A 5 WATT CW TRAVELING WAVE AMPLIFIER TUBE HAVING 20 DB GAIN AND 8.0 TO 12.0 KMC FREQUENCY RANGE. IT IS CONSTRUCTED IN A RUGGED METAL CERAMIC ENVELOPE WITH A HELIX TYPE SLOW WAVE STRUCTURE. THE INTEGRAL MATCHING CIRCUIT IS IN 50 OHM COAXIAL LINE AND IS PROVIDED WITH FEMALE TNC CONNECTORS. THE TUBE IS PACKAGED IN AN OIL COOLED SOLENOID WITH INTEGRAL COLLECTOR COOLER, WHICH IS REQUIRED TO PROVIDE A UNIFORM MAGNETIC FIELD. A CONVERGENT BEAM GUN AND OXIDE IMPREGNATED CATHODE ARE USED. THE TUBE IS SUITABLE FOR EITHER CW OR PULSE SERVICE.

ELECTRICAL INFORMATION:

HEATER VOLTAGE	6.3 (±5%)	VOLTS
HEATER CURRENT	1.7	AMPERES
MAXIMUM FREQUENCY	12.0	KMC
MINIMUM FREQUENCY	8.0	KMC
MINIMUM COLD TRANSMISSION LOSS	50	DB
CAPACITANCE		
CONTROL ELECTRODE TO ALL ELEMENTS	10	UUF MAX.

ELECTRICAL RATINGS, ABSOLUTE VALUES:

MAXIMUM ANODE VOLTAGE (NOTE 1)	4000	VOLTS
MAXIMUM HELIX CURRENT (NOTE 2)	3	MA
MAXIMUM COLLECTOR DISSIPATION (BEAM POWER)	240	WATTS
MAXIMUM CONTROL ELECTRODE VOLTAGE (NOTE 3)	-500	VOLTS

SOLENOID DATA:

TYPE OF COOLANT	OS 45	OIL
PRESSURE MAXIMUM	100	PSI
FLOW	1	GALLON/MIN.
SOLENOID CURRENT	1 TO 2	AMPS.
SOLENOID VOLTAGE	140 TO 200	VOLTS D.C.

* FORMERLY D-2005-A

MECHANICAL INFORMATION:

Type of Cathode	Oxide Coated Unipotential
Gun Connections	Flying Leads
R-F Terminals	Female TNC Connectors
Mounting Position	Any

TYPICAL OPERATION:

Anode Voltage	3800	Volts
Anode Current	50	ma
Helix Current	1.0	ma
Control Electrode Voltage (Note 3)	-30	Volts
Power Output	5	Watts Nominal
Gain	20	db Nominal
Duty Cycle (Note 3)		
R-F	Variable to 1.0	
Beam	1.0	

Note 1: All voltages shown are with respect to cathode. Anode, collector and outer coax conductor of the R-F terminals are connected internally to the shell and are operated at ground potential. The helix is connected to the center conductor of the coax line and a D.C. connection from the helix to the shell must be provided externally in the R-F circuitry.

Note 2: The helix current should be minimized and must be less than the maximum rating. It is desirable to monitor this current during operation and to provide overload protection. In pulsed beam operation, the peak helix current may exceed 3 ma but care should be taken to operate at reasonably low values and average current must not exceed 3 ma.

Note 3: The control electrode voltage is adjusted for best transmission for CW operation (normally about -30 volts). Beam gate off can be accomplished by applying voltage of -400 to -500 volts. The tube should not be operated with control electrode voltage in the range of -50 to -400 volts. For gated beam (pulse) operation, the values of power output, anode current and helix current become peak values.

Additional information for specific applications can be obtained from the:

Electron Tube Applications Section
ITT Components Division
Post Office Box 7065
Roanoke, Virginia

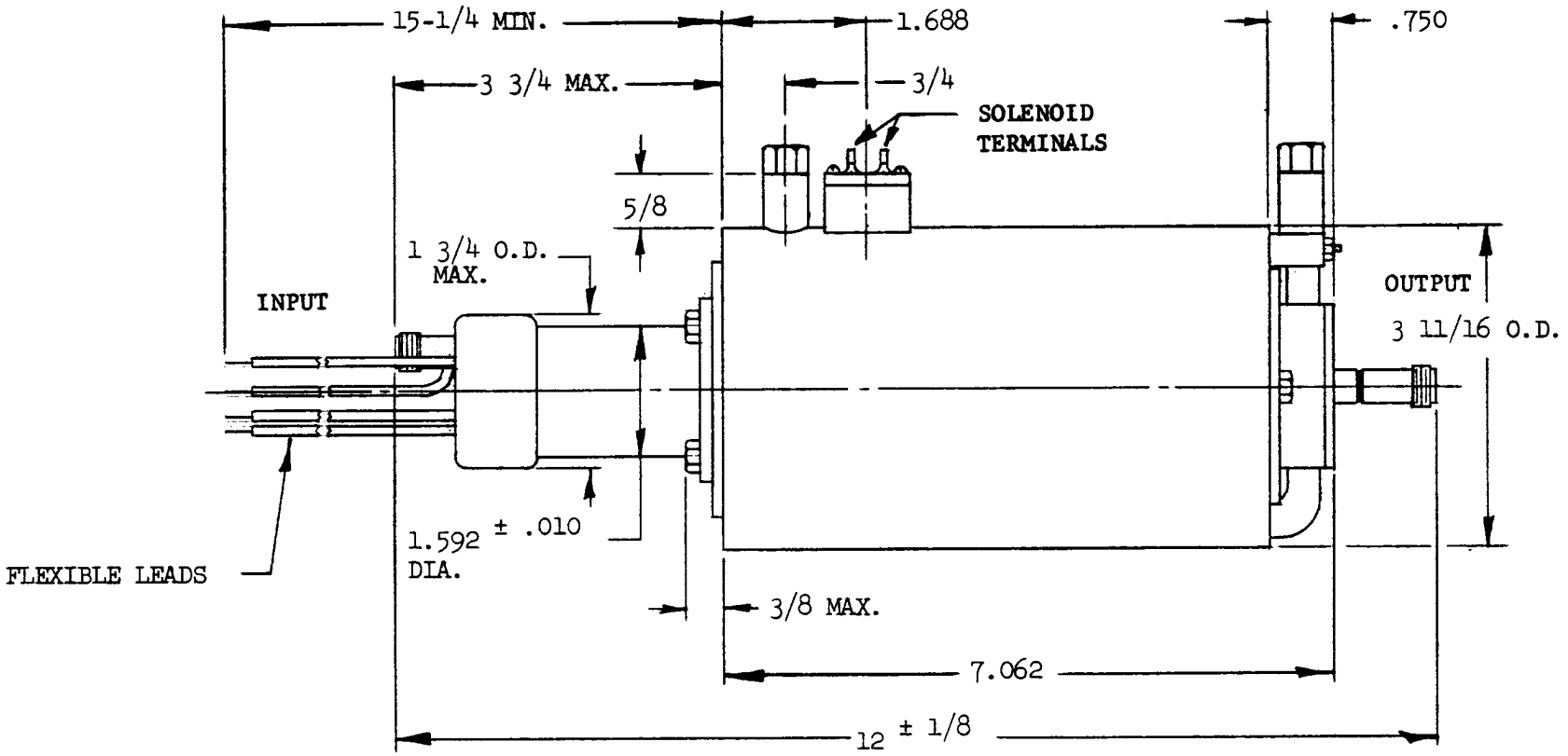

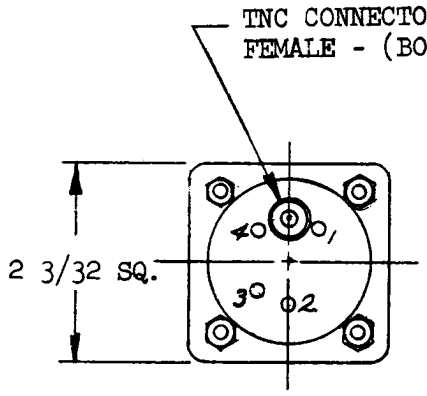

LEAD CONNECTIONS

Lead	Color Code	Connections
1	Yellow	Heater-Cathode
2	Green	Control Electrode
3	Black	Anode
4	Brown	Heater

OUTLINE TUBE TYPE - 7525

DESCRIPTION:

THE F-7526 IS A 50 MW CW TRAVELING WAVE AMPLIFIER TUBE HAVING 30 DB GAIN AND 8.0 TO 12.0 KMC FREQUENCY RANGE. IT IS CONSTRUCTED IN A RUGGED METAL ENVELOPE WITH A HELIX TYPE SLOW WAVE STRUCTURE. THE INTEGRAL MATCHING CIRCUIT IS IN 50 OHM COAXIAL LINE AND IS PROVIDED WITH FEMALE TNC CONNECTORS. THE TUBE IS PACKAGED IN AN OIL COOLED SOLENOID WITH INTEGRAL COLLECTOR COOLER, WHICH IS REQUIRED TO PROVIDE A UNIFORM MAGNETIC FIELD. A CONVERGENT BEAM GUN AND OXIDE COATED CATHODE ARE USED. THE TUBE IS SUITABLE FOR EITHER CW OR PULSE SERVICE.

ELECTRICAL INFORMATION:

HEATER VOLTAGE	6.3 (±5%)	VOLTS
HEATER CURRENT	0.85	AMPERE
MAXIMUM FREQUENCY	12.0	KMC
MINIMUM FREQUENCY	8.0	KMC
MINIMUM COLD TRANSMISSION LOSS	50	DB
CAPACITANCE		
CONTROL ELECTRODE TO ALL ELEMENTS	15	UUF (MAX.)

ELECTRICAL RATINGS, ABSOLUTE VALUES:

MAXIMUM ANODE VOLTAGE (NOTE 1)	1600	VOLTS
MAXIMUM HELIX CURRENT (NOTE 2)	2	MA
MAXIMUM COLLECTOR DISSIPATION (BEAM POWER)	15	WATTS
MAXIMUM CONTROL ELECTRODE VOLTAGE (NOTE 3)	-500	VOLTS

SOLENOID DATA:

SOLENOID CURRENT	.6 TO 1.13	AMPS
SOLENOID VOLTAGE	150 TO 200	VDC
TYPE OF COOLANT	OS 45	OIL
PRESSURE MAXIMUM	100	PSI
FLOW	1	GALLON/MIN.

MECHANICAL:

Type of Cathode	Oxide Coated Unipotential
Gun Connections	Flying Leads
R-F Connections	Female TNC
Mounting Position	Any

TYPICAL OPERATION:

Anode Voltage	1400	Volts
Anode Current	5	MA
Helix Current	0.5	MA
Control Electrode Voltage (Note 3)	-15	Volts
Solenoid Current	0.9	Amps
Solenoid Voltage	170	Volts
Power Output	50	MW NOMINAL
Gain	30	DB NOMINAL
Duty Cycle (Note 3)		
R-F	Variable to 1.0	
Beam	1.0	

Note 1: All voltage shown are with respect to cathode. Anode, collector and outer coax conductor of the R-F terminals are connected internally to the shell and are operated at ground potential. The helix is connected to the center conductor of the coax line and a D.C. connection from the helix to the shell must be provided externally in the R-F circuitry.

Note 2: The helix current should be minimized and must be less than the maximum rating. It is desirable to monitor this current during operation and to provide overload protection. In pulsed beam operation, the peak helix current may exceed 2 MA, but care should be taken to operate at reasonably low values and average current must not exceed 2 MA.

Note 3: The control electrode voltage is adjusted for best transmission for CW operation (Normally about -5 volts). Beam gate off can be accomplished by applying voltage of -400 to -500 volts. The tube should not be operated with control electrode voltage in the range of approximately -5 to -400 volts. For gated beam (pulse) the values of power output, anode current and helix current become peak values.

Additional information for specific applications can be obtained from the:

Electron Tube Applications Section
ITT Components Division
Post Office Box 7065
Roanoke, Virginia

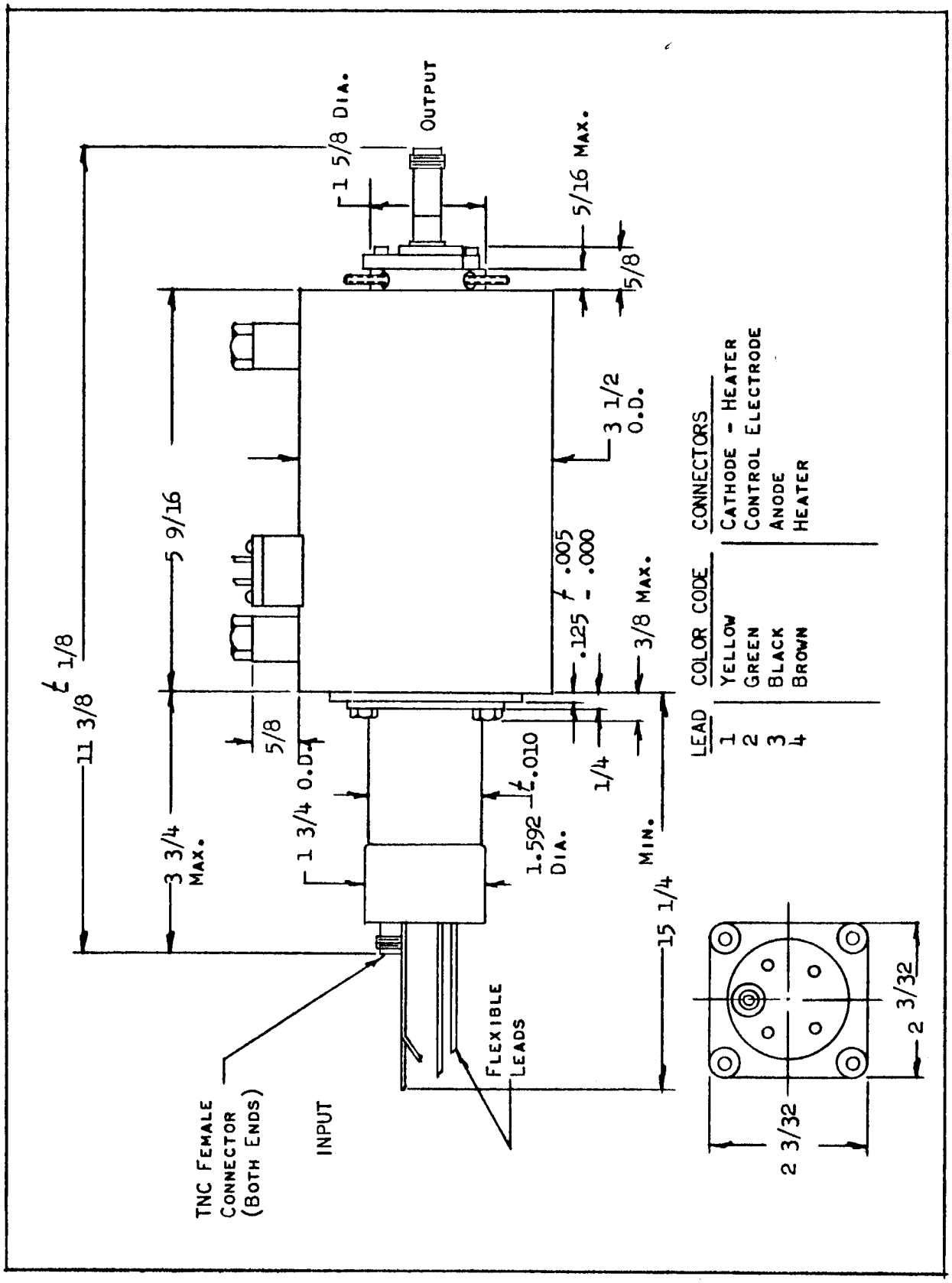

OUTLINE F-7526

10-60

ELECTRON TUBE DEPARTMENT ■ COMPONENTS DIVISION
INTERNATIONAL TELEPHONE AND TELEGRAPH CORPORATION, CLIFTON, NEW JERSEY

F-7847
TRAVELING
WAVE TUBE

FORMERLY X-319

TENTATIVE

DESCRIPTION:

THE F-7847 IS A 10 WATT CW TRAVELING WAVE AMPLIFIER TUBE HAVING 27 DB GAIN AND 5.0 TO 6.0 FREQUENCY RANGE. IT IS CONSTRUCTED IN A RUGGED METAL ENVELOPE WITH A HELIX TYPE SLOW WAVE STRUCTURE. THE INTEGRAL MATCHING CIRCUIT IS IN 50 OHM COAXIAL LINE AND IS PROVIDED WITH FEMALE TNC CONNECTORS. THE TUBE IS SELF-ALIGNING IN THE EXTERNAL SOLENOID, WHICH IS REQUIRED TO PROVIDE A UNIFORM MAGNETIC FIELD. A CONVERGENT BEAM GUN AND OXIDE COATED CATHODE ARE USED. THE TUBE IS SUITABLE FOR EITHER CW OR PULSE SERVICE.

ELECTRICAL INFORMATION:

HEATER VOLTAGE	6.3 (±5%)	VOLTS
HEATER CURRENT	2.2	AMPERES
MAXIMUM FREQUENCY	6.0	
MINIMUM FREQUENCY	5.0	
MINIMUM COLD TRANSMISSION LOSS	55	DB
CAPACITANCE		
CONTROL ELECTRODE TO ALL ELEMENTS	15	UUF

ELECTRICAL RATINGS, ABSOLUTE VALUES:

MAXIMUM ANODE VOLTAGE (NOTE 1)	3000	VOLTS
MAXIMUM HELIX CURRENT (NOTE 2)	2	MA
MAXIMUM COLLECTOR DISSIPATION (BEAM POWER) (NOTE 3)	196	WATTS
MAXIMUM CONTROL ELECTRODE VOLTAGE	0	VOLTS

MECHANICAL:

TYPE OF CATHODE	OXIDE COATED UNIPOTENTIAL	
GUN CONNECTIONS	FLYING LEADS	
R-F CONNECTIONS	FEMALE TNC	
MAGNETIC FIELD STRENGTH	1200	GAUSS
MOUNTING POSITION	ANY	
WEIGHT (TUBE ONLY)	14	OZ.
TYPE OF COOLING (NOTE 4)	WATER OR AIR	

TYPICAL OPERATION:

Anode Voltage	2800	Volts
Anode Current	67	ma
Helix Current	1.0	ma
Control Electrode Voltage	0	Volts
Power Output	10	Watts
Gain	27	db
Duty Cycle (Note 5)		
R-F	Variable to 1.0	
Beam	1.0	

Note 1: All voltages shown are with respect to cathode. Anode, collector and outer coax conductor of the R-F terminals are connected internally to the shell and are operated at ground potential. The helix is connected to the center conductor of the coax line and a D.C. connection to the helix must be provided externally in the R-F circuitry.

Note 2: The helix current should be minimized and must be less than the maximum rating. It is desirable to monitor this current during operation and to provide overload protection. In pulsed beam operation, the peak helix current may exceed 2 ma, but care should be taken to operate at reasonably low values and average current must not exceed 2 ma.

Note 3: The beam voltage should be applied to the tube only after the magnetic field is turned on and water or air is flowing through the collector cooling jacket.

Note 4: Cooling method depends on type of collector cooling jacket used.

Note 5: Gated beam operation can be utilized by pulsing anode voltage In this type of operation, the values of power output, anode current and helix current become peak values.

Additional information for specific applications can be obtained from the:

Electron Tube Applications Section
ITT Components Division
Post Office Box 7065
Roanoke, Virginia

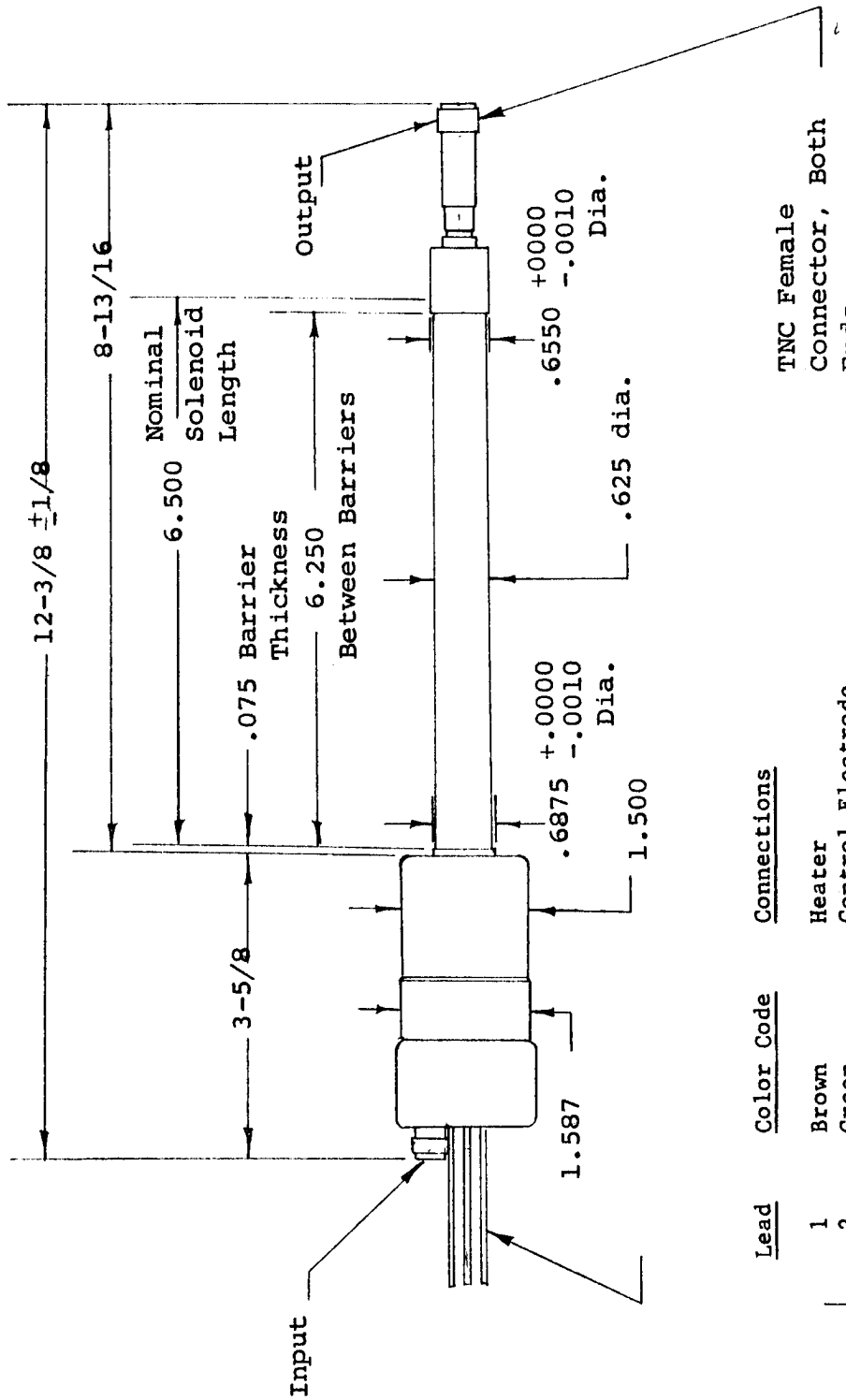

Lead	Color Code	Connections
1	Brown	Heater
2	Green	Control Electrode
3	Black	Anode, Capsule and Collector
4	Yellow	Heater-Cathode

Flexible Leads 12" Min. Length

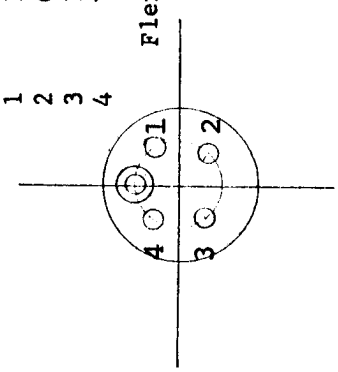

OUTLINE - F-7847

engineering TUBE DATA

F-7848
TRAVELING
WAVE TUBE

ITT Components Division

TENTATIVE

DESCRIPTION:

THE F-7848 IS A 2 KILOWATT PULSE TRAVELING WAVE AMPLIFIER TUBE HAVING 27 DB GAIN AND 5400 TO 5900 MC FREQUENCY RANGE. IT IS CONSTRUCTED IN A RUGGED METAL-CERAMIC ENVELOPE WITH A HELIX TYPE SLOW WAVE STRUCTURE. THE INTEGRAL MATCHING CIRCUIT IS IN 50 OHM COAXIAL LINE AND IS PROVIDED WITH FEMALE TNC CONNECTORS. THE TUBE IS SELF-ALIGNING IN AN EXTERNAL SOLENOID WHICH IS REQUIRED TO PROVIDE A UNIFORM MAGNETIC FIELD. A CONVERGENT BEAM GUN AND OXIDE IMPREGNATED CATHODE ARE USED. DUTY CYCLES UP TO .005 AND PULSE LENGTHS UP TO 6 MICROSECONDS CAN BE USED:

ELECTRICAL INFORMATION:

HEATER VOLTAGE	6.3	VOLTS
HEATER CURRENT	5.2	AMPERES
FREQUENCY RANGE (NOTE 1)	5400 MC TO 5900	MC
MINIMUM TRANSMISSION LOSS, NO VOLTAGES APPLIED	60	DB
CAPACITANCE		
CATHODE TO ALL OTHER ELEMENTS	25	UUFD

ELECTRICAL RATINGS, ABSOLUTE VALUES:

HEATER VOLTAGE	6.3 (±5%)	VOLTS
HEATER CURRENT	5.6	AMPERES
MAXIMUM ANODE VOLTAGE (NOTE 2)	17,000	VOLTS
MAXIMUM HELIX CURRENT	0.4	AMPERE PEAK
MAXIMUM COLLECTOR DISSIPATION (NOTE 3)	225	WATTS AVERAGE
MAXIMUM R-F INPUT POWER	10	WATTS AVERAGE
MAXIMUM R-F OUTPUT POWER	15	WATTS AVERAGE
MAXIMUM DUTY CYCLE	.005	
MAXIMUM CATHODE CURRENT	3.7	AMPERES PEAK
LOAD VSWR	3.5 : 1	MAX.

ITT ELECTRON TUBE DEPARTMENT
COMPONENTS DIVISION
INTERNATIONAL TELEPHONE AND TELEGRAPH CORPORATION
P. O. BOX 412, CLIFTON, NEW JERSEY

MECHANICAL INFORMATION:

Type of Cathode	Oxide Impregnated	Unipotential
Base	Large Water	Octal Base
Type of Envelope	Metal	Ceramic
Magnetic Field Strength	2000	Gauss
Mounting Position		Any
Weight of Tube	1.5	lbs. approx.
R-F Connections	Female	Type TNC
Maximum Tube Temperature	177	°C

TYPICAL OPERATION AS POWER AMPLIFIER OVER FREQUENCY RANGE:

Anode Voltage (Note 1)	10,000	Volts
Cathode Current	2.5	Amperes Peak
Power Output	2.0	kw peak min.
Gain	27	db min.
Duty	.002	
Pulse Width	2	u seconds

Note 1: Useful gain and power output exists below 5000 mc and above 6000 mc and can be utilized by adjusting anode voltage to optimize the frequency range desired. However, bandwidth cannot be extended both upward and downward simultaneously and maximum gain and power output outside the normal bandwidth will be lower than rated values.

Note 2: All voltages shown are with respect to cathode. Anode, helix, collector, and outer coax conductor of the R-F connections are connected internally to the shell. An internal DC connection is provided between the center lead of the R-F coax terminals and the shell.

Note 3: Conduction cooling for the collector must be provided by a suitable device.

GENERAL OPERATING INSTRUCTIONS:

(1) Heater warm up of 2 minutes before applying high voltage is recommended.

(2) High voltage must not be applied in the absence of magnetic field.

(3) Initial adjustments should be done at low duty cycle (less than .001) to prevent tube damage due to high shell (interception) current.

Additional information for specific applications can be obtained from the:

Electron Tube Applications Section
ITT Components Division
Post Office Box 7065
Roanoke, Virginia

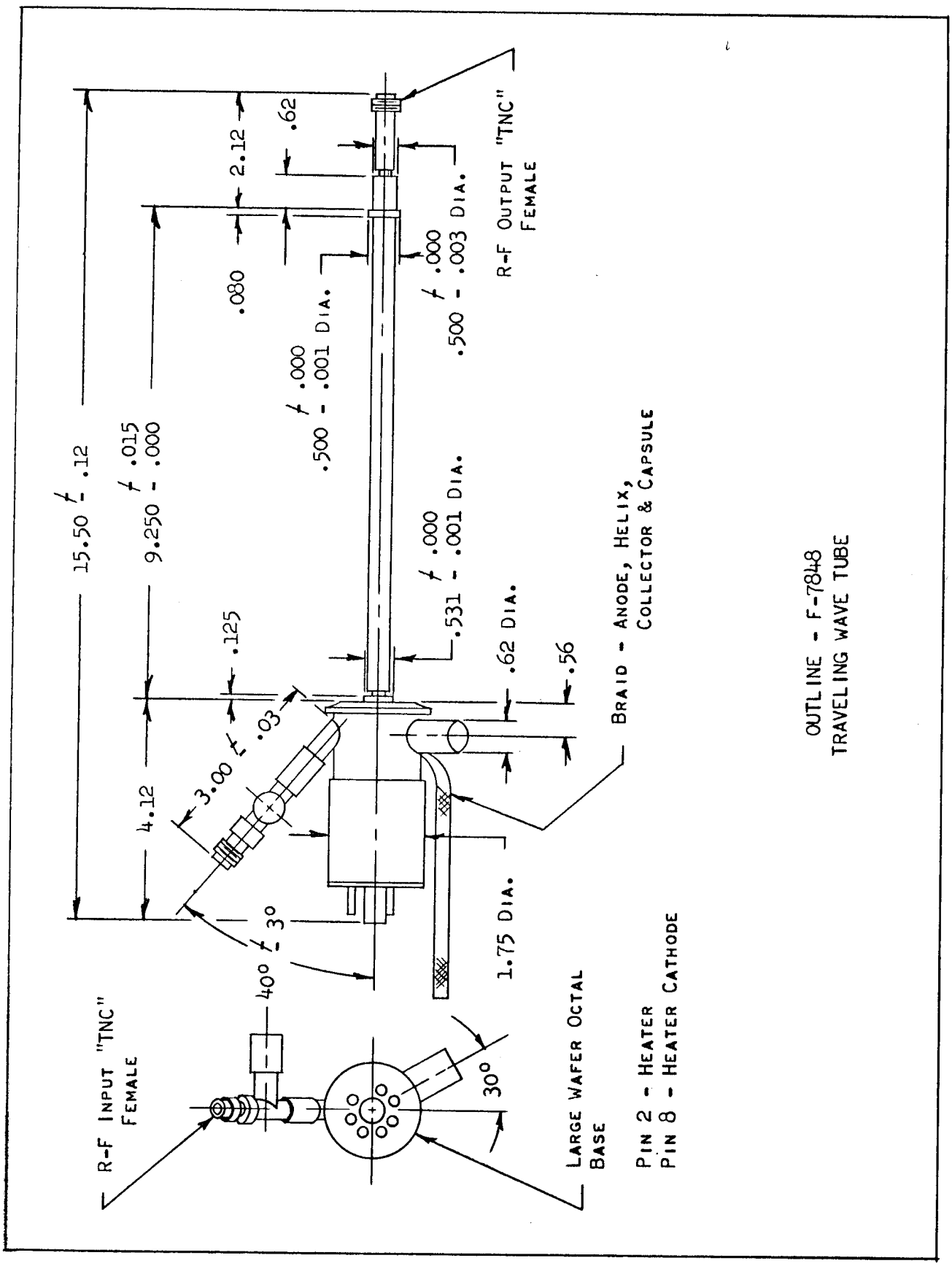

ELECTRON TUBE DEPARTMENT
ITT COMPONENTS DIVISION
INTERNATIONAL TELEPHONE AND TELEGRAPH CORPORATION
P. O. BOX 412, CLIFTON, NEW JERSEY

ELECTRON TUBE DEPARTMENT ■ COMPONENTS DIVISION
INTERNATIONAL TELEPHONE AND TELEGRAPH CORPORATION, CLIFTON, NEW JERSEY

F-7975 * POWER DIODE

DESCRIPTION

The F-7975 is a diode designed for rectifier service or in special applications in shunting or charging circuits. The construction is exceptionally rugged with a thoriated tungsten filamentary cathode of bifilar helical construction. The anode is forced air-cooled and is capable of dissipating 3.5 kw.

ELECTRICAL

Filament Voltage			15	volts
Filament Current			36	amperes
Filament Starting Current Full rated filament voltage may be safely applied to the cold filament				
Maximum Ratings	Shunt	Charging	Rectifier	
Max. Peak Inverse Voltage	55	55	46	kilovolts
Max. Peak Plate Current	100	100	21	amperes
Max. Average Plate Current	-	-	5	amperes
Max. Peak Inverse Voltage x Average Plate Current			165,000	
Inter-Electrode Capacitance			11.5	μμf

MECHANICAL

Mounting Position			Vertical, Anode up or down	
Max. Glass & Seal Temperature			180	°C
Type of Cooling			Forced	air
Anode Air Flow Required				
Plate Dissipation	3.5	2.8	2.4	kilowatts
Minimum Air Flow	190	125	75	cfm
Pressure--inches of water	1.6	.78	.35	
Max. Incoming Air Temperature			45	°C
Net Weight, approx.			7	lbs.

Additional information for specific applications can be obtained from the:

ITT Components Division
Electron Tube Applications Section
P.O. Box 412
Clifton, New Jersey

* Formerly the D-1042.

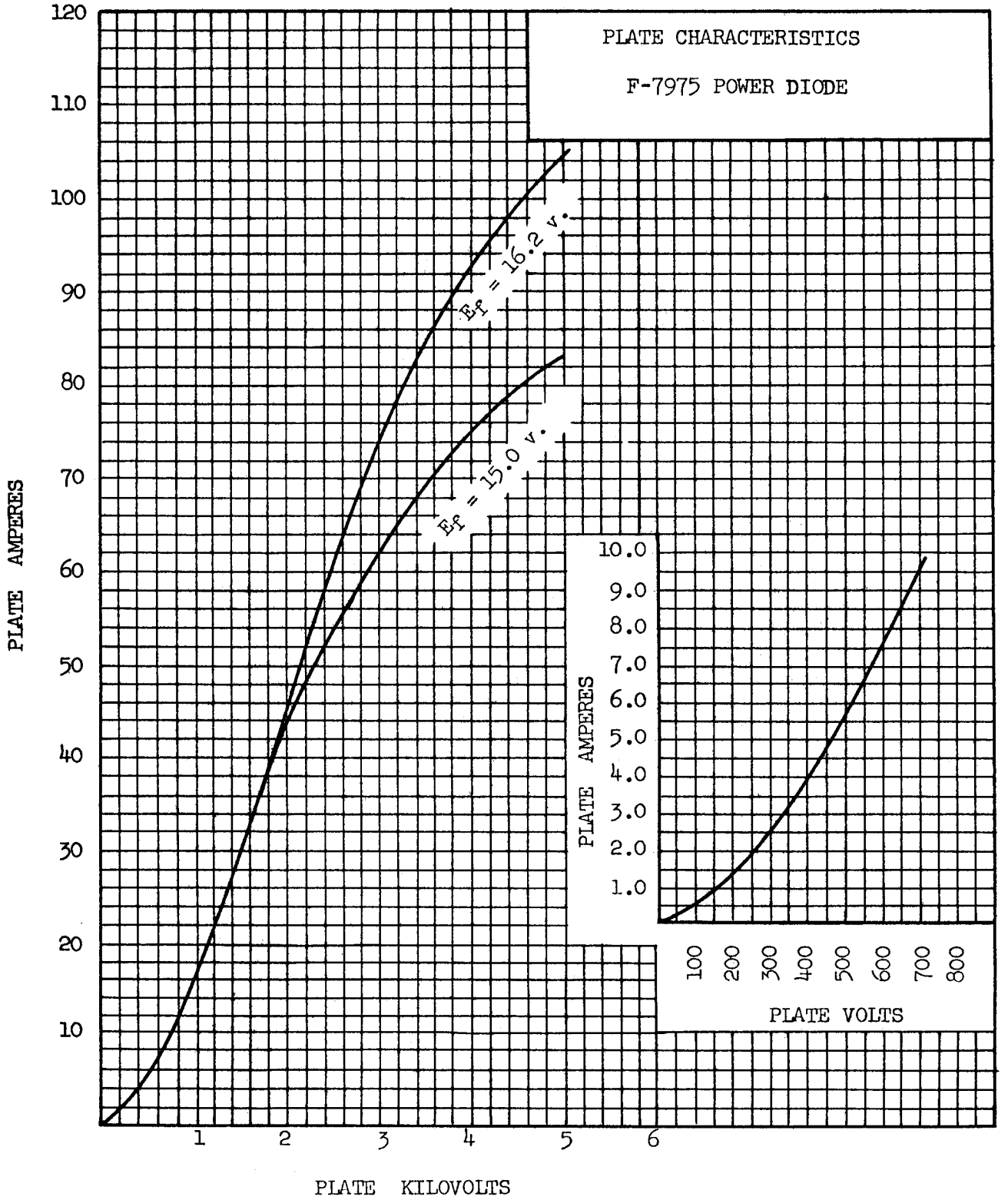
PLATE CHARACTERISTICS
F-7975 POWER DIODE
Ef = 16.2 v.
Ef = 15.0 v.
PLATE AMPERES
120
110
100
90
80
70
60
50
40
30
20
10
1
2
3
4
5
6
PLATE KILOVOLTS
PLATE AMPERES
10.0
9.0
8.0
7.0
6.0
5.0
4.0
3.0
2.0
1.0
100
200
300
400
500
600
700
800
PLATE VOLTS

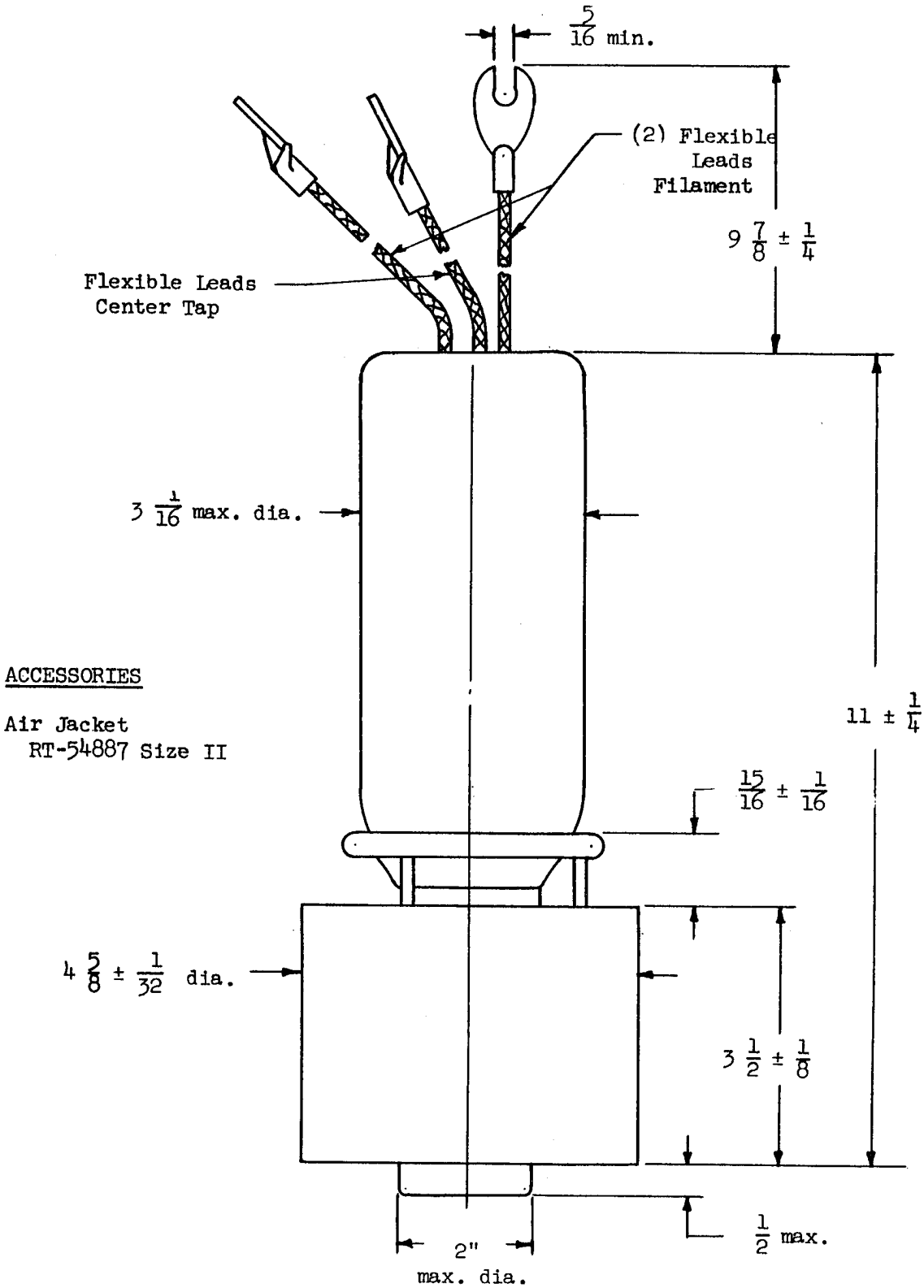

ACCESSORIES

Air Jacket
RT-54887 Size II

OUTLINE
F-7975 POWER DIODE

ELECTRON TUBE DEPARTMENT ■ COMPONENTS DIVISION
INTERNATIONAL TELEPHONE AND TELEGRAPH CORPORATION, CLIFTON, NEW JERSEY

ELECTRON TUBE DEPARTMENT ■ COMPONENTS DIVISION
INTERNATIONAL TELEPHONE AND TELEGRAPH CORPORATION, CLIFTON, NEW JERSEY

* F-8104 AND F-8104-J POWER TRIODES

DESCRIPTION:

THE F-8104 AND F-8104-J ARE TRIODES DESIGNED FOR USE AS R-F AMPLIFIERS AND OSCILLATORS. THE ANODE IS WATER COOLED AND 8 KILOWATTS OF POWER MAY BE DISSIPATED DURING CONTINUOUS COMMERCIAL SERVICE. THE F-8104-J IS PROVIDED WITH AN INTEGRAL WATER JACKET ATTACHED TO THE TUBE.

ELECTRICAL:

FILAMENT VOLTAGE	15	VOLTS
FILAMENT CURRENT	36	AMPERES
AMPLIFICATION FACTOR	25	
DIRECT INTER-ELECTRODE CAPACITANCE		
GRID-PLATE	14.2	UUF
GRID-FILAMENT	16.3	UUF
PLATE-FILAMENT	1.9	UUF

MECHANICAL:

MOUNTING POSITION	VERTICAL, ANODE UP OR DOWN	
TYPE OF COOLING	CIRCULATING WATER	
ANODE WATER FLOW REQUIRED	3.5	GPM
WATER PRESSURE, MAXIMUM	80	PSI
OUTLET WATER TEMPERATURE, MAXIMUM	70	°C
MAXIMUM GLASS TEMPERATURE	180	°C
NET WEIGHT, APPROXIMATE	1-1/4	LBS.

* FORMERLY D-1040 AND D-1040-J

MAXIMUM RATING AND TYPICAL OPERATING CONDITIONS:

R-F Power Amplifier and Oscillator - Class C
(Key down conditions per tube without Amplitude Modulation)

Maximum Ratings, Absolute Values:

	2 mc to 30 mc	Below 2 mc	
D-C Plate Voltage *	6.0	8.0	MAX. KV
D-C Grid Voltage	-1500	-1500	MAX. KV
D-C Plate Current	2.2	2.5	MAX. AMPERES
D-C Grid Current	.300	.300	MAX. AMPERES
Plate Input	12	18	MAX. KW
Plate Dissipation	8	8	MAX. KW

Typical Operation:

D-C Plate Voltage	5.5	7.5	KV
D-C Grid Voltage	-600	-800	VOLTS
Peak R-F Grid Voltage	1300	1600	VOLTS
D-C Plate Current	2.0	2.4	VOLTS
D-C Grid Current, approximate	.17	.15	AMPERES
Driving Power, approximate	220	240	WATTS
Power Output, approximate	6.8	11.5	KW
R-F Load Resistance	1175	1300	OHMS

* Rectified, unfiltered, three-phase, half-wave plate supply is acceptable.

Additional information for specific applications can be obtained from the:

Electron Tube Applications Section
ITT Components Division
Post Office Box 412
Clifton, New Jersey

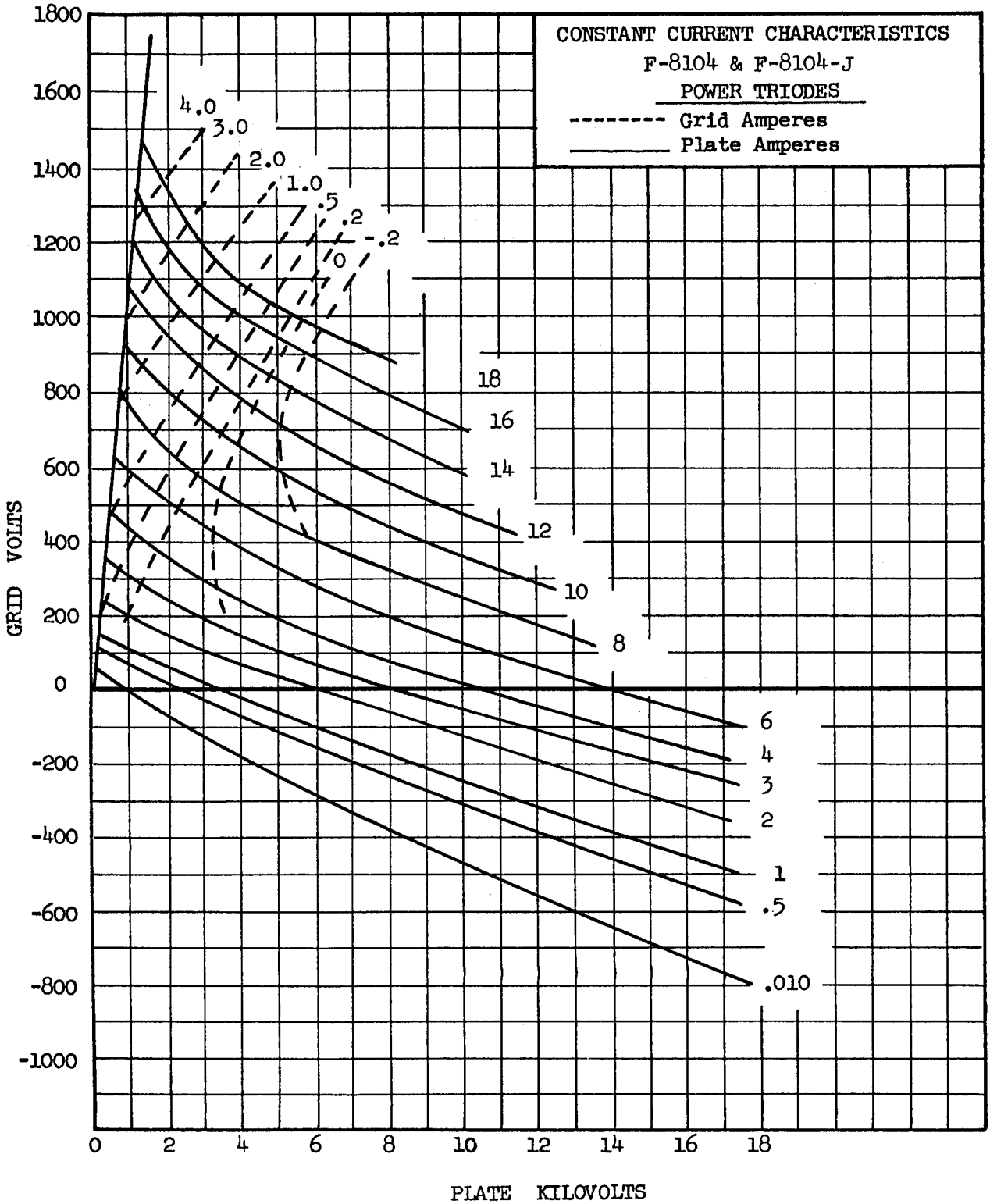
CONSTANT CURRENT CHARACTERISTICS
F-8104 & F-8104-J
POWER TRIODES
-------- Grid Amperes
_____ Plate Amperes
GRID VOLTS
PLATE KILOVOLTS
1800
1600
1400
1200
1000
800
600
400
200
0
-200
-400
-600
-800
-1000
0
2
4
6
8
10
12
14
16
18
4.0
3.0
2.0
1.0
.5
.2
-.2
0
18
16
14
12
10
8
6
4
3
2
1
.5
.010

Fil. Terminal - Yellow
Fil. Center Terminal - Red
Grid Terminal - Black

ACCESSORIES

Water Jacket
RT-53933-12 (Ordering #)
RT-54530-1 (Outline Dwg)
O-Ring
RT-53836-1 - Type "AA"

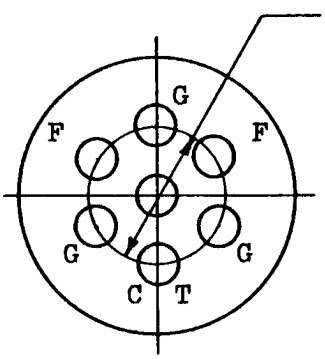

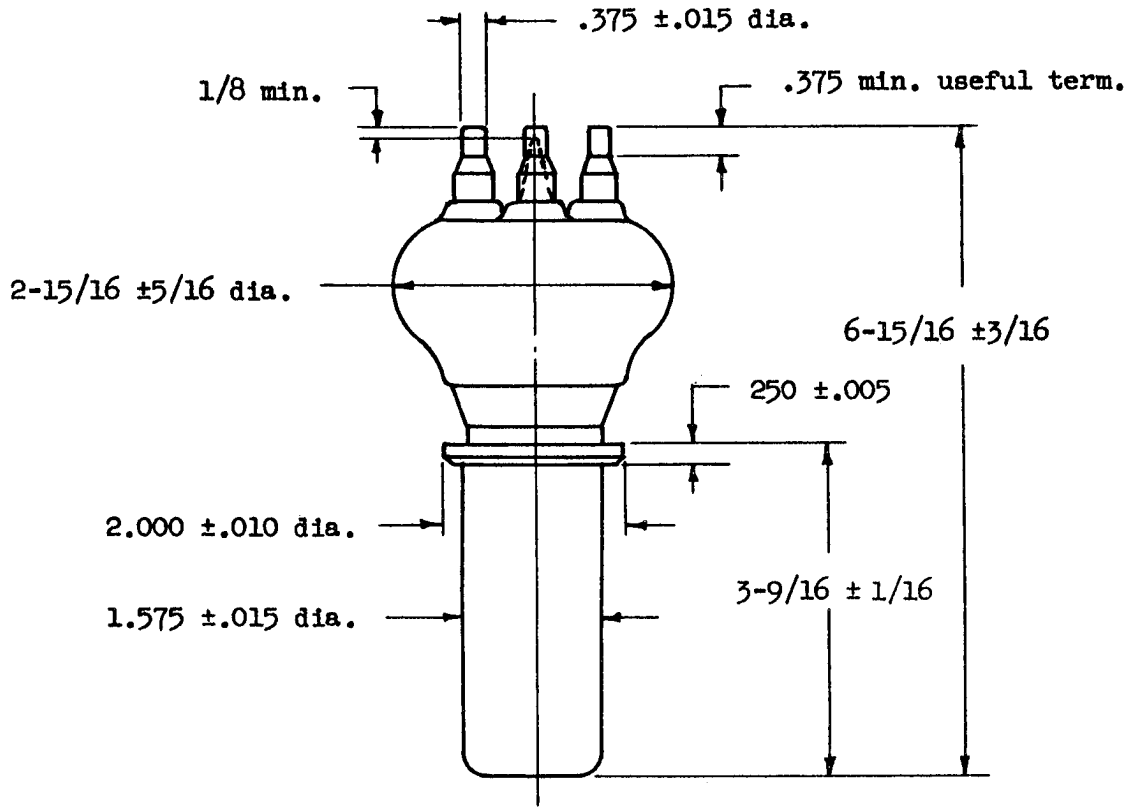

NOTE:
1/2" flexible copper lead, 6" long, available on each terminal upon request.

OUTLINE

F-8104 POWER TRIODE

Fil. Terminal - Yellow
Fil. Center Term. - Red
Grid Terminal - Black

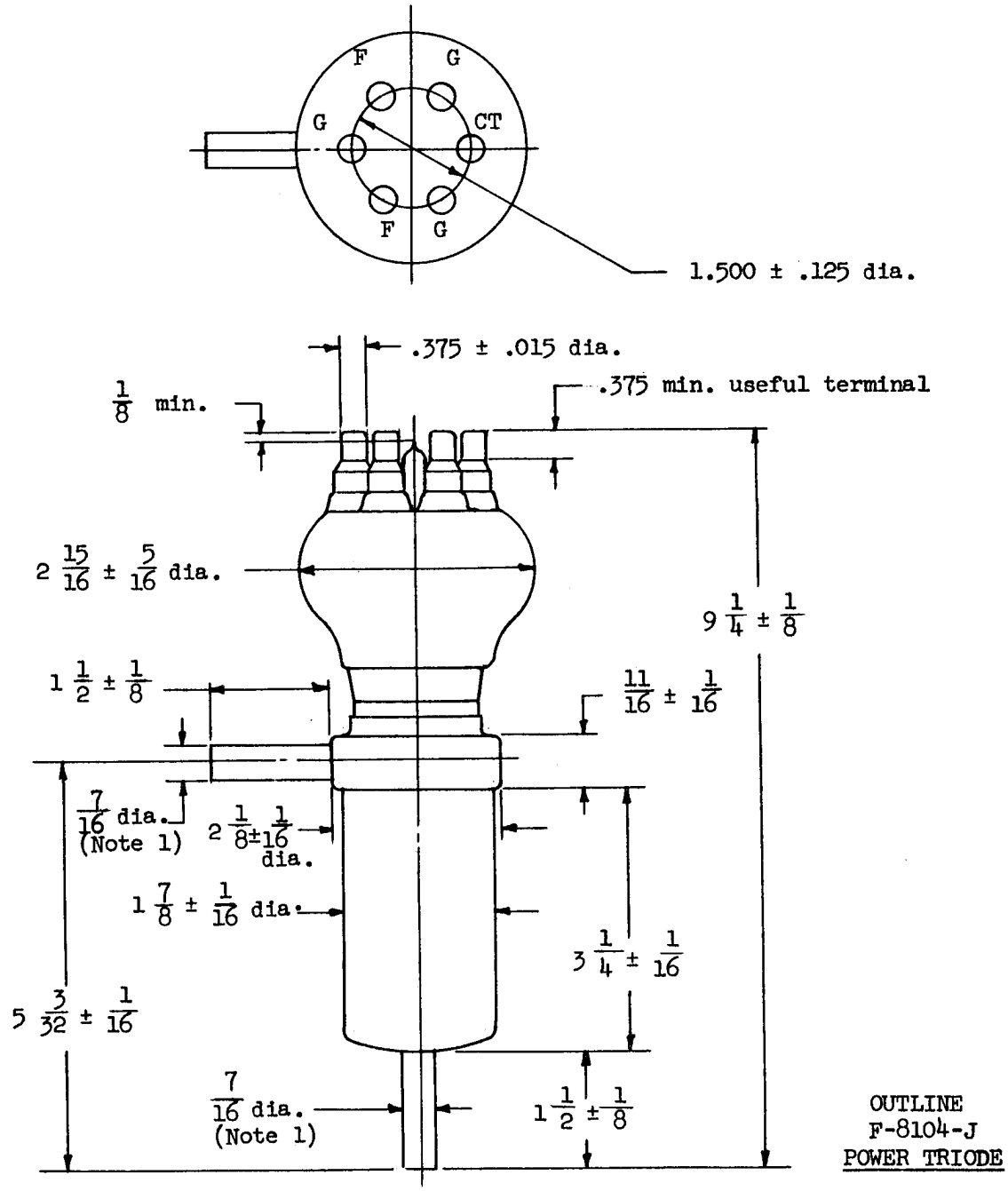

OUTLINE
F-8104-J
POWER TRIODE

Note 1: Brass compression fittings are useful in making water connections.

Note 2: 1/2" flexible copper lead, 6" long, available on each terminal upon request.

ELECTRON TUBE DEPARTMENT ■ COMPONENTS DIVISION
INTERNATIONAL TELEPHONE AND TELEGRAPH CORPORATION, CLIFTON, NEW JERSEY

F-8146 *
F-8147
POWER
TRIODES

Tentative Specification

DESCRIPTION

The F-8146 and F-8147 are general purpose metal and ceramic triodes for use as amplifiers, oscillators or Class B modulators under CW or pulsed conditions. The F-8146 has a water-cooled anode capable of dissipating 40 kilowatts. The F-8147 has a forced air-cooled, copper anode-radiator assembly of brazed construction capable of 20 kilowatts.

ELECTRICAL

Filament Voltage	11	volts
Filament Current	155	amperes
Filament Starting Current	500	amperes
Filament Cold Resistance	.008	ohms
Amplfication Factor		
E_c = -50 volts; I_b = 3 amperes	17	
Direct Inter-Electrode Capacitance		
Grid-Plate	53	μμf
Grid-Filament	58	μμf
Plate-Filament	3.0	μμf

MECHANICAL

Mounting Position	Vertical, anode up or down						
Ceramic and Seal Temperature, max. (see Notes 1 and 2)	250° C						
	F-8146			F-8147			
Plate Dissipation	40	30	20	20	15	10	kilowatts
Water Flow	20	15	10		-		gpm
Water Jacket Pressure Drop	18	10	5		-		psi
Air Flow (Note 3)		-		1000	600	300	cfm
Static Air Pressure		-		8	3	1	inches of water
Net Weight, approx.		8.5			22		lbs.

Note 1: Auxiliary air flow of up to 120 cfm may be required to limit the ceramic and seal temperature to less than the 250°C max.

Note 2: A temperature sensitive lacquer manufactured by the Tempil Corporation, 132 W. 22nd St., New York 11, N. Y. is convenient for this measurement.

Note 3: Maximum incoming air temperature, 45°C.

* Formerly our D-1030A & B.

MAXIMUM RATINGS AND TYPICAL OPERATING CONDITIONS
(Values apply to both tubes unless otherwise specified)

Audio-Frequency Power Amplifier and Modulator - Class B

Maximum Ratings, Absolute Values

D-C Plate Voltage	11,000	volts
Maximum Signal D-C Plate Current **	8	amperes
Maximum Signal Plate Input **		
F-8146	80	kilowatts
F-8147	60	kilowatts
Plate Dissipation **		
F-8146	40	kilowatts
F-8147	20	kilowatts

Typical Operation
(Unless otherwise specified, values are for two tubes)

	F-8146	F-8146	
D-C Plate Voltage	10,500	8,500	volts
D-C Grid Voltage	-600	-520	volts
Peak A-F Grid-to-Grid Voltage	1,800	1,740	volts
Peak A-F Plate-to-Plate Voltage	16,000	14,000	volts
Zero Signal D-C Plate Current	1.8	1.2	amperes
Maximum Signal D-C Plate Current	15.2	12.8	amperes
Effective Load Resistance, Plate-to-Plate	1,330	1,400	ohms
Maximum Signal Driving Power, approx.	50	110	watts
Maximum Signal Power Output, approx.	95	70	kilowatts

Radio-Frequency Power Amplifier - Class B
(Carrier conditions per tube for use with a maximum modulator factor of 1.0)

Maximum Ratings, Absolute Values

D-C Plate Voltage	11,000	volts
D-C Plate Current	6	amperes
Plate Input		
F-8146	60	kilowatts
F-8147	30	kilowatts
Plate Dissipation		
F-8146	40	kilowatts
F-8147	20	kilowatts

** Averaged over any audio-frequency cycle of sine-wave form.

Typical Operation

	F-8146	F-8146	
D-C Plate Voltage	10,500	8,500	volts
D-C Grid Voltage	-550	-460	volts
Peak R-F Grid Voltage	600	520	volts
Peak R-F Plate Voltage	4,000	3,500	volts
D-C Plate Current	4.5	5.7	amperes
D-C Grid Current	0	0	amperes
R-F Load Resistance	550	380	ohms
Driving Power, approx. ++	200	575	watts
Power Output, approx.	14.5	16	kilowatts

Plate-Modulated Radio-Frequency Power Amplifier - Class C Telephony
(Carrier conditions per tube for use with a maximum modulation factor of 1.0)

Maximum Ratings, Absolute Values

D-C Plate Voltage		8,500	volts
D-C Grid Voltage		-2,000	volts
D-C Plate Current		6	amperes
D-C Grid Current		.8	amperes
Plate Input		55	kilowatts
Plate Dissipation	F-8146	26	kilowatts
	F-8147	13	kilowatts

Typical Operation

D-C Plate Voltage	8,000	volts
D-C Grid Voltage	-1,400	volts
Peak R-F Grid Voltage	2,120	volts
Peak R-F Plate Voltage	7,000	volts
D-C Plate Current	5.6	amperes
D-C Grid Current	.6	amperes
R-F Load Resistance	680	ohms
Driving Power, approx.	1,250	watts
Power Output, approx.	36	kilowatts

++ At crest of audio frequency cycle
with modulation factor of 1.0

Radio-Frequency Power Amplifier and Oscillator - Class C Telegraphy
(Key down conditions per tube without amplitude modulation ≠)

Maximum Ratings, Absolute Values

D-C Plate Voltage	11,000	volts
D-C Grid Voltage	-2,000	volts
D-C Plate Current	8	amperes
D-C Grid Current	.8	amperes
Plate Input	80	kilowatts
Plate Dissipation		
F-8146	40	kilowatts
F-8147	20	kilowatts

Typical Operation

	Cathode Drive	Grid Drive			
D-C Plate Voltage	7,500	10,500	9,500	7,500	volts
D-C Grid Voltage	-800	-1,500	-1,200	-800	volts
Peak R-F Grid Voltage	1,300	2,050	1,750	1,300	volts
Peak R-F Plate Voltage	6,000	9,000	8,000	6,000	volts
D-C Plate Current	7.5	6.7	7.8	7.5	amperes
D-C Grid Current	.45	.40	.45	.45	amperes
R-F Load Resistance	460	735	570	460	ohms
Driving Power, approx.	9,000	770	760	545	watts
Power Output, approx.	47	55	55	38	kilowatts

≠ Modulation essentially negative may be used if the positive peak of the envelope does not exceed 115 per cent of the carrier conditions.

RATINGS VERSUS FREQUENCY

Maximum ratings apply up to 50 megacycles. The tube may be operated at higher frequencies provided the maximum values of plate voltage and power input are reduced according to the tabulation below (other maximum ratings are the same above). Special attention should be given to adequate ventilation of the ceramics and seals at these frequencies.

Frequency	50	110	megacycles
Percentage of Maximum Rated Plate Voltage and Plate Input	100	70	per cent

PULSE SERVICE OPERATIONS

In pulse r-f amplifier service, it is possible to operate the tube under conditions not permissible in CW operation. Because of the wide variety of operating conditions, it is advisable that tube operation recommendations be obtained from our Engineering Department for specific conditions.

MODULATOR TUBE - PULSED OPERATION

Maximum Ratings, Absolute Values

D-C Plate Voltage	18	kilovolts
Peak Plate Voltage (instantaneous)	20	kilovolts
D-C Grid Voltage	-2500	volts
Peak Positive Grid Voltage	4000	volts
Pulse Cathode Current	220	amperes
Grid Dissipation	800	watts
Pulse Length	2000	µsec.

Typical Operation

D-C Plate Voltage	16	kilovolts
Pulse Plate Current	120	amperes
D-C Grid Voltage	-1500	volts
Pulse Grid Current	40	amperes
Pulse Positive Grid Voltage	2200	volts
Duty Factor	.003	
Pulse Length	10	µsec.
Plate Output Voltage	13.5	kilovolts
Pulse Output Power	1.6	mw

Additional information for specific applications can be obtained from the:

Electron Tube Applications Section
ITT Components Division
P.O. Box 412
Clifton, New Jersey

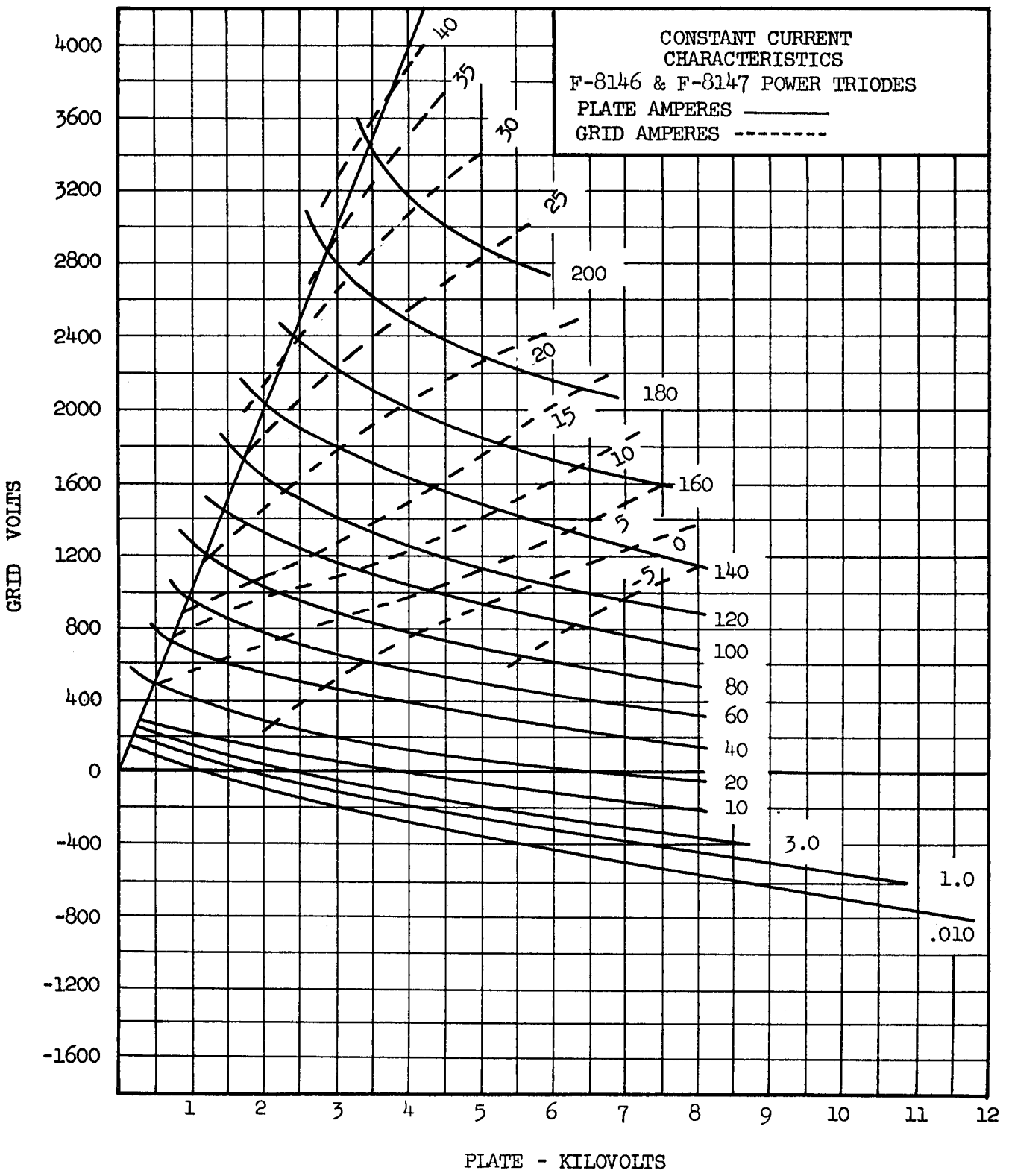
CONSTANT CURRENT
CHARACTERISTICS
F-8146 & F-8147 POWER TRIODES
PLATE AMPERES ———
GRID AMPERES --------
GRID VOLTS
4000
3600
3200
2800
2400
2000
1600
1200
800
400
0
-400
-800
-1200
-1600
40
35
30
25
20
15
10
5
0
-5
200
180
160
140
120
100
80
60
40
20
10
3.0
1.0
.010
1
2
3
4
5
6
7
8
9
10
11
12
PLATE - KILOVOLTS

NOTE: Contact areas are to be concentric within .025".

OUTLINE
F-8146 POWER TRIODE

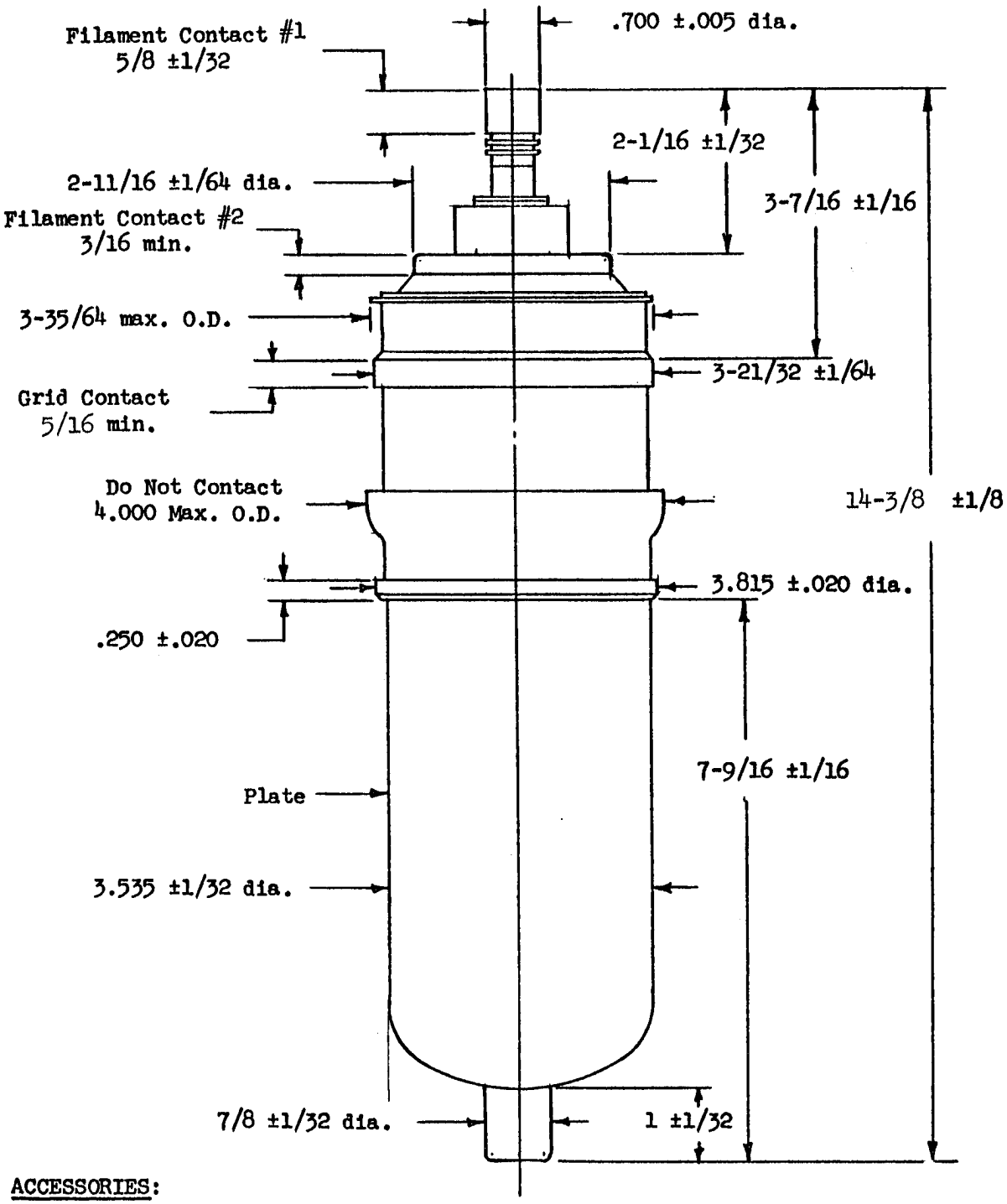

ACCESSORIES:

Filament Connector #1 - RT-54764
Filament Connector #2 - RT-54765
Grid Connector - RT-54763
Water Jacket - RT-55070

NOTE: Contact areas are to be concentric within .025"

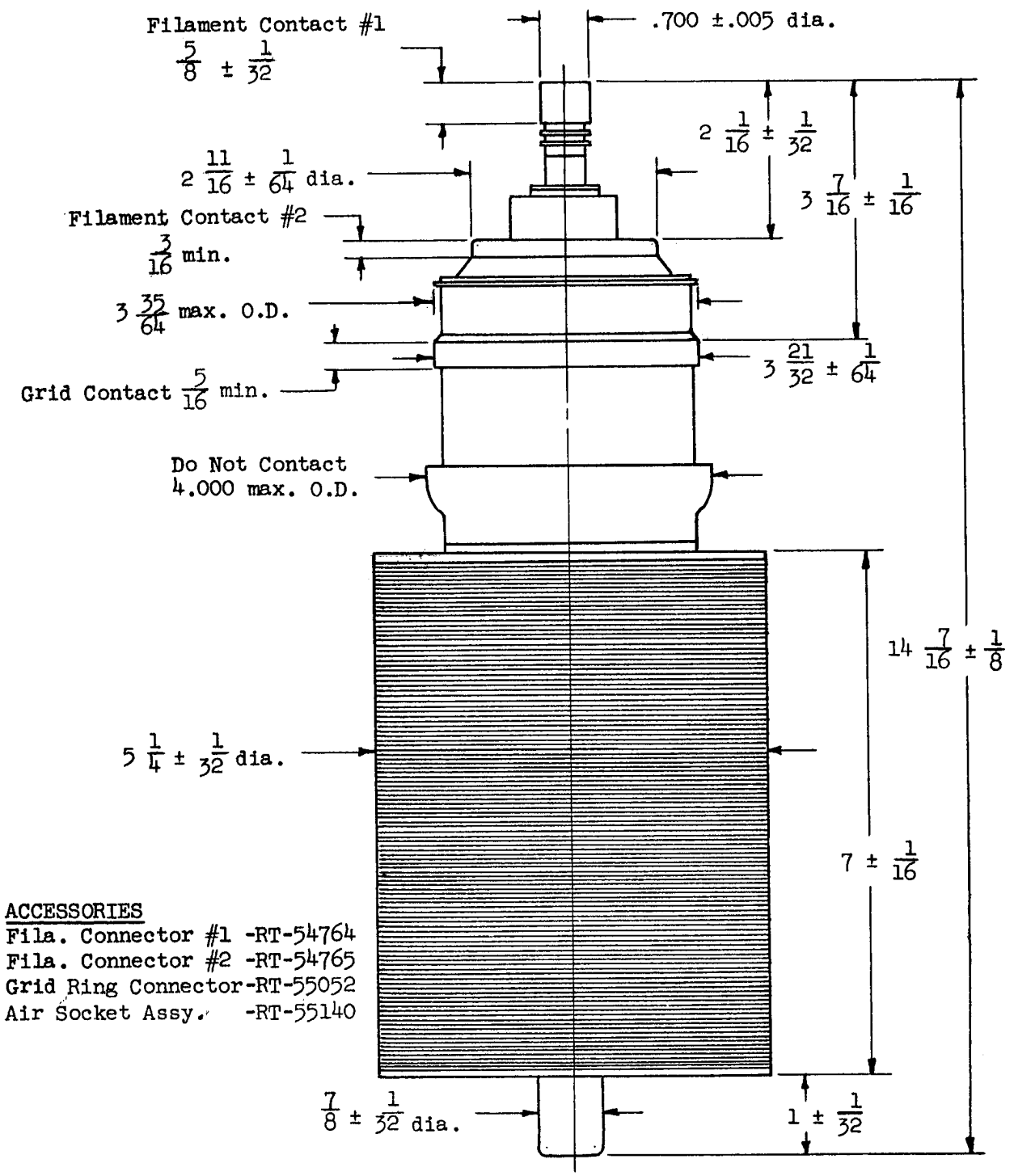

ACCESSORIES

Fila. Connector #1 -RT-54764
Fila. Connector #2 -RT-54765
Grid Ring Connector-RT-55052
Air Socket Assy. -RT-55140

OUTLINE
F-8147 POWER TRIODE

ELECTRON TUBE DEPARTMENT ■ COMPONENTS DIVISION
INTERNATIONAL TELEPHONE AND TELEGRAPH CORPORATION, CLIFTON, NEW JERSEY

F-8207 *
F-8207J
POWER DIODES

DESCRIPTION

Tube types F-8207 and F-8207J are diodes designed for rectifier service or in special applications in shunting or charging circuits. The exceptionally rugged construction, free of internal insulators, spring tensioning devices, and fragile elements, make these diodes adaptable to a wide range of uses. The heavy-wall, water-cooled anode is capable of dissipating up to 8 kilowatts at 3.5 gpm. The F-8207J is provided with an integral water jacket and the inlet and outlet water connections are male fittings for quick-connect coupling without tools.

ELECTRICAL

Filament Voltage			15	volts
Filament Current			36	amperes
Filament Starting Current				
Full rated filament voltage may be safely applied to the cold filament				
Maximum Ratings	Shunt	Charging	Rectifier	
Max. Peak Inverse Voltage	30	30	30	kilovolts
Max. Peak Plate Current	100	7.5 rms	20	amperes
Max. Plate Current	-	-	6	avg. amperes

MECHANICAL

Mounting Position		Vertical, Anode up or down		
Type of Cooling		Circulating water		
Plate Dissipation	8	6	4	kilovolts
Water Flow	3.5	2.3	1.0	gpm
Water Jacket Pressure Drop ‡				
Water Pressure, max.			80	psig
Outlet Water Temperature, max.			70	°C
Max. Glass and Seal Temperature			180	°C
Net Weight, approx.			2	lbs.

‡ The pressure drop across the jacket is negligible compared to the drop in the associated plumbing.

Additional information for specific applications can be obtained from:

Electron Tube Applications Section
ITT Components Division
P.O. Box 412
Clifton, New Jersey

3-62

* Formerly our D-1050 and D-1050J

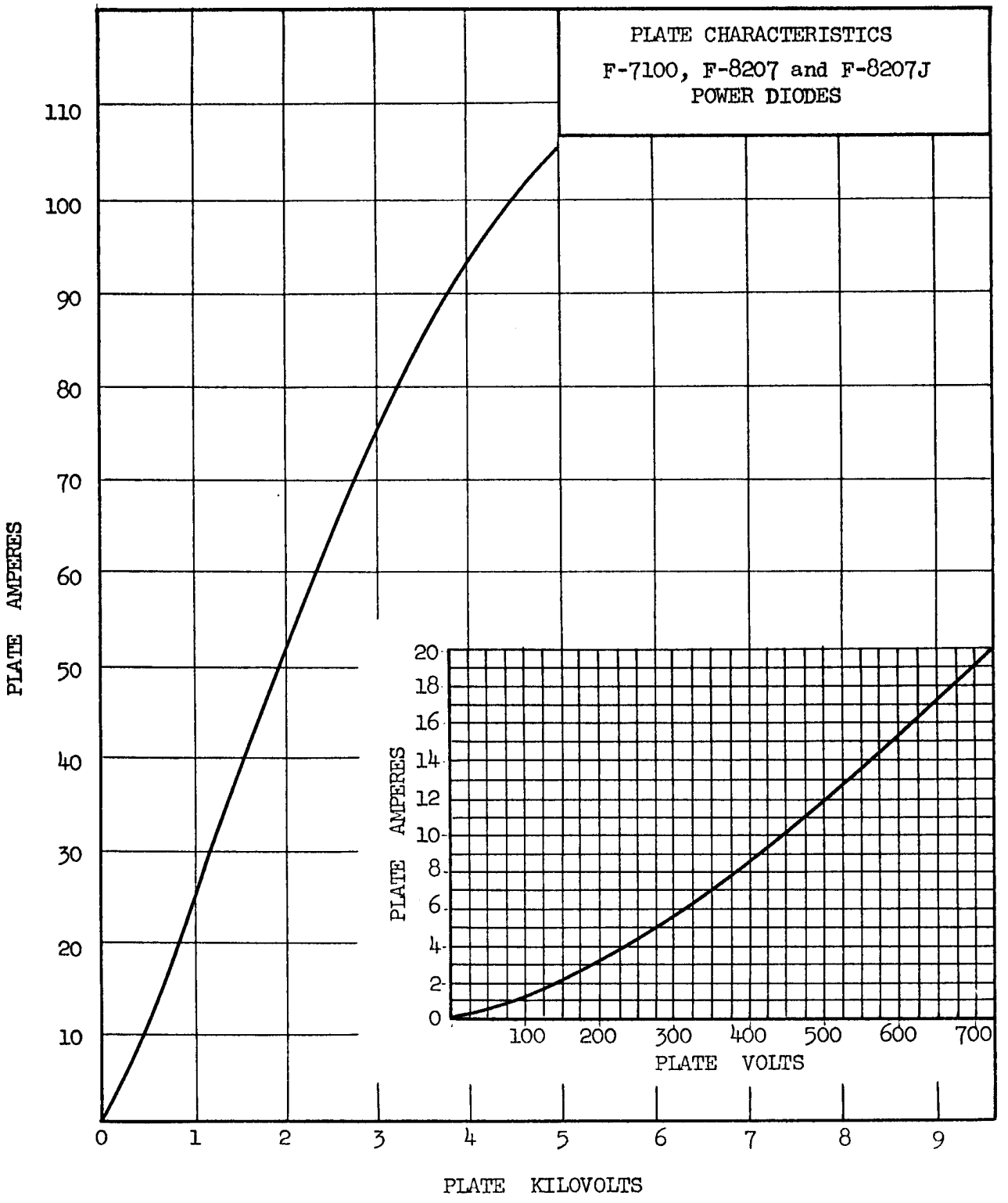
PLATE CHARACTERISTICS
F-7100, F-8207 and F-8207J
POWER DIODES
PLATE AMPERES
110
100
90
80
70
60
50
40
30
20
10
0
1
2
3
4
5
6
7
8
9
PLATE KILOVOLTS
PLATE AMPERES
20
18
16
14
12
10
8
6
4
2
0
100
200
300
400
500
600
700
PLATE VOLTS

3-62

Color Code

Fil. Term. - Yellow
Fil. C. Term. - Red

This tube type is available on request with 1/2" wide flexible copper leads, 6" long.

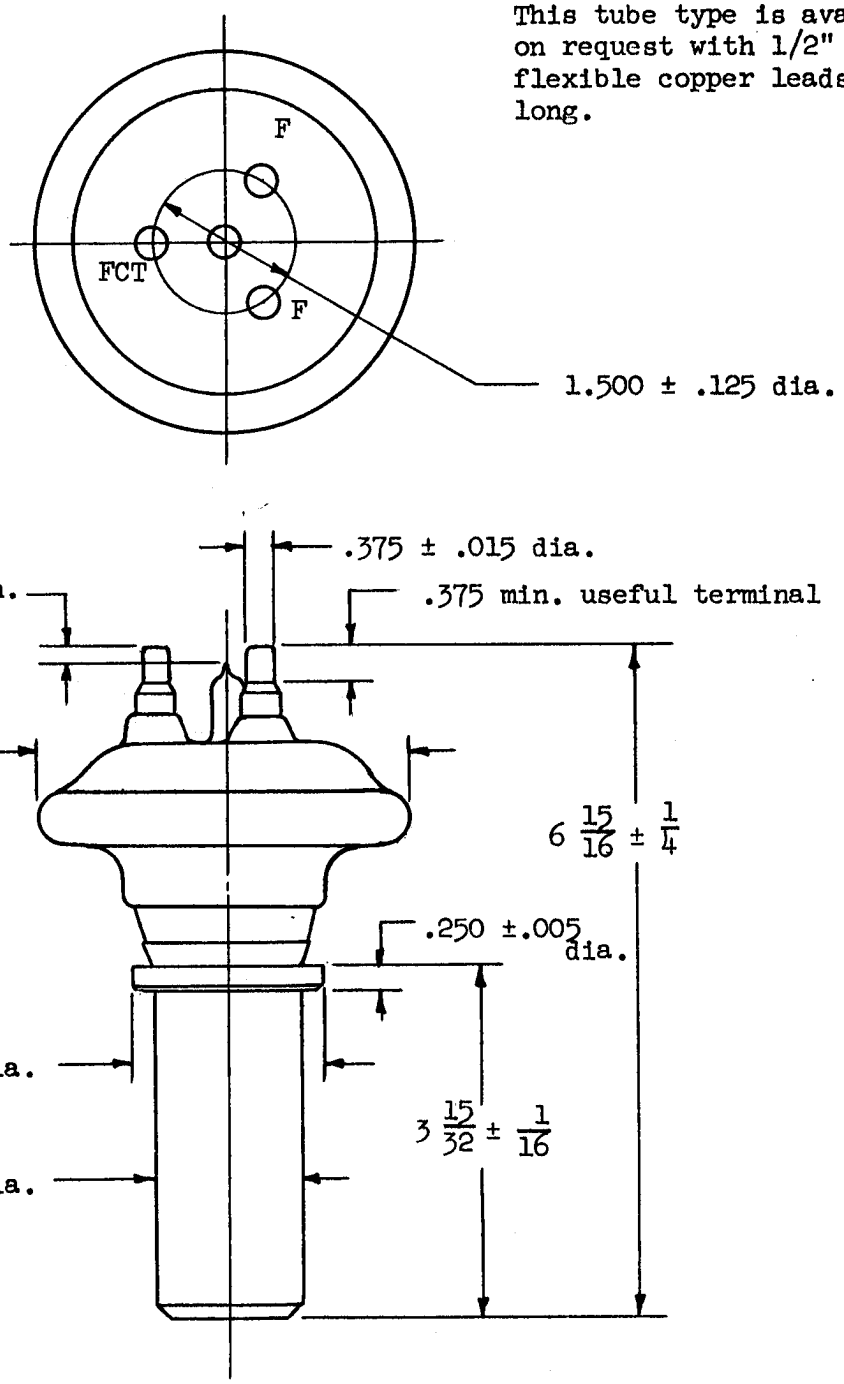

OUTLINE
F-8207 POWER DIODE

Color Code

Fil. Term. - Yellow
Fil. C. Term. - Red

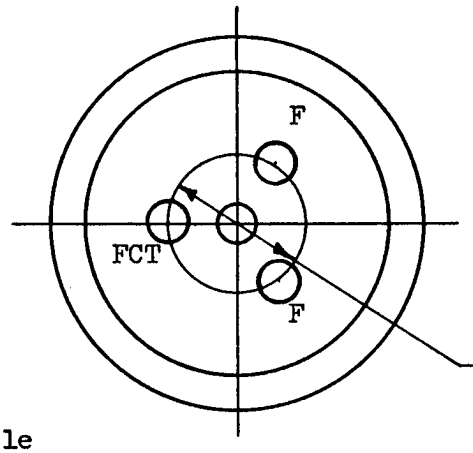

This tube type is available on request with 1/2" wide flexible copper leads, 6" long.

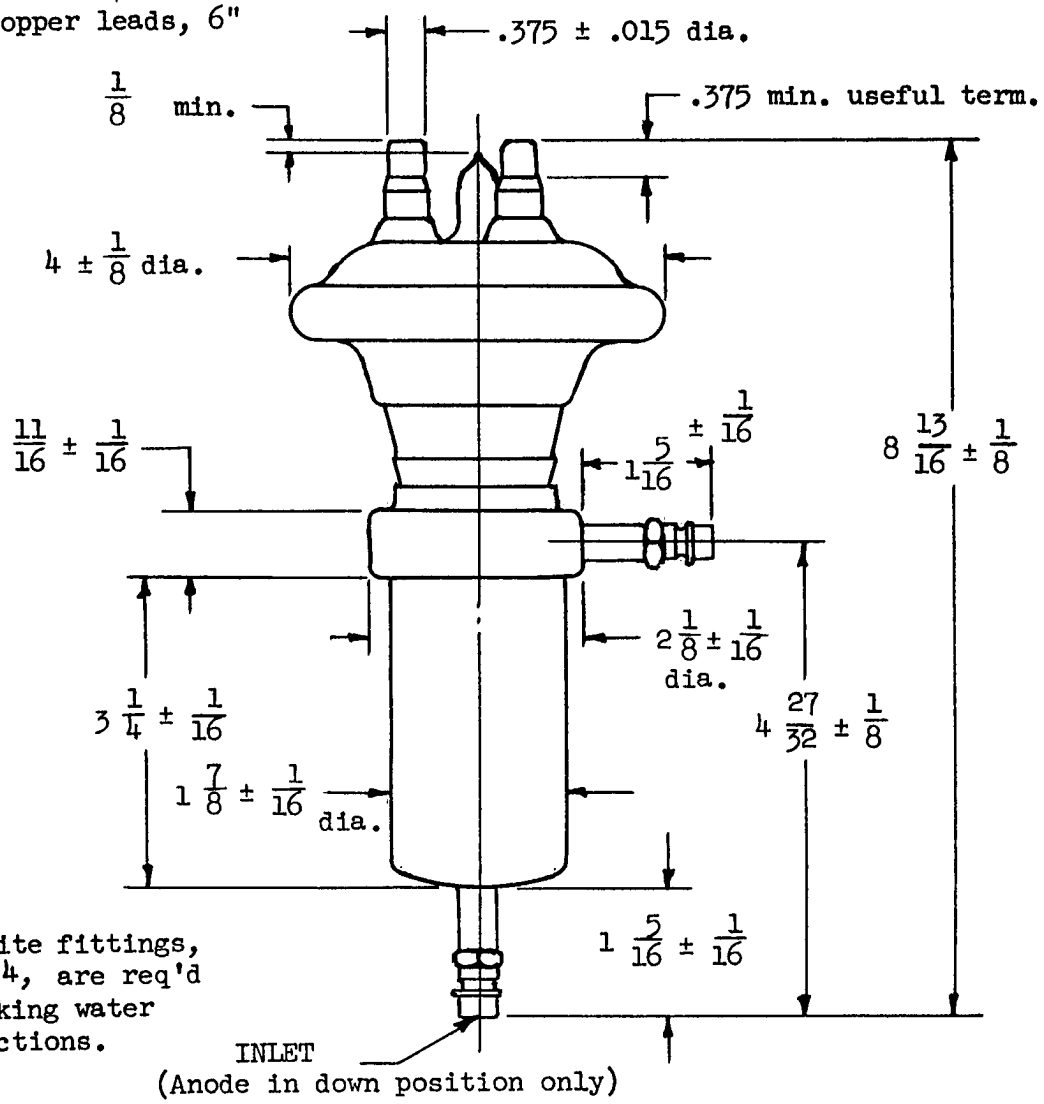

NOTE-Snaptite fittings, BPHC-4, are req'd in making water connections.

OUTLINE
F-8207J POWER DIODE

ELECTRON TUBE DEPARTMENT ■ COMPONENTS DIVISION
INTERNATIONAL TELEPHONE AND TELEGRAPH CORPORATION, CLIFTON, NEW JERSEY

F-8208 *
POWER DIODE

DESCRIPTION

The F-8208 is a high vacuum diode designed for rectifier service or in special circuits wherever the limited emission characteristics of the pure tungsten cathode is desirable. The anode is cooled with circulating water and is capable of dissipating 20 kilowatts during Continuous Commercial Service. The high thermal inertia of the heavy wall external anode protects against tube damage during momentary overload conditions. The cathode is a pure tungsten filament of rugged bifilar helix construction.

ELECTRICAL

Filament Voltage	22	volts
Filament Current	60	amperes
Filament Starting Current, max.	120	amperes
Filament Cold Resistance	.031	ohms
Inter-Electrode Capacitance	13	μμf

MECHANICAL

Mounting Position	Vertical, Anode down	
Type of Cooling	Circulating water	
Min. Water Flow on Anode	4	gpm
Max. Outgoing Water Temperature	70	°C
Max. Glass and Seal Temperature ++	180	°C
Net Weight, approx.	4.5	lbs.

++ Air flow up to 35 cfm may be required to hold the temperature of the glass and seals below 180°C. A temperature sensitive lacquer manufactured by the Tempil Corporation, 132 West 22nd St., New York 11, New York, is convenient for this measurement.

* Formerly our D-1047

F-8208
POWER
DIODE

MAXIMUM RATINGS	Surge Limiting Diode Operation	Rectifier	
Peak Inverse Voltage	45	45	kilovolts
Peak Plate Current	10	10	amperes
Average Plate Current	-	3	amperes
Average Plate Dissipation	20	20	kilowatts
Peak Forward Voltage	50	-	kilovolts
Peak Plate Dissipation **	40	40	kilowatts

** Shall not exceed 5 seconds in duration.

Additional information for specific applications can be obtained from:

ITT Components Division
Electron Tube Applications Section
P.O. Box 412
Clifton, New Jersey

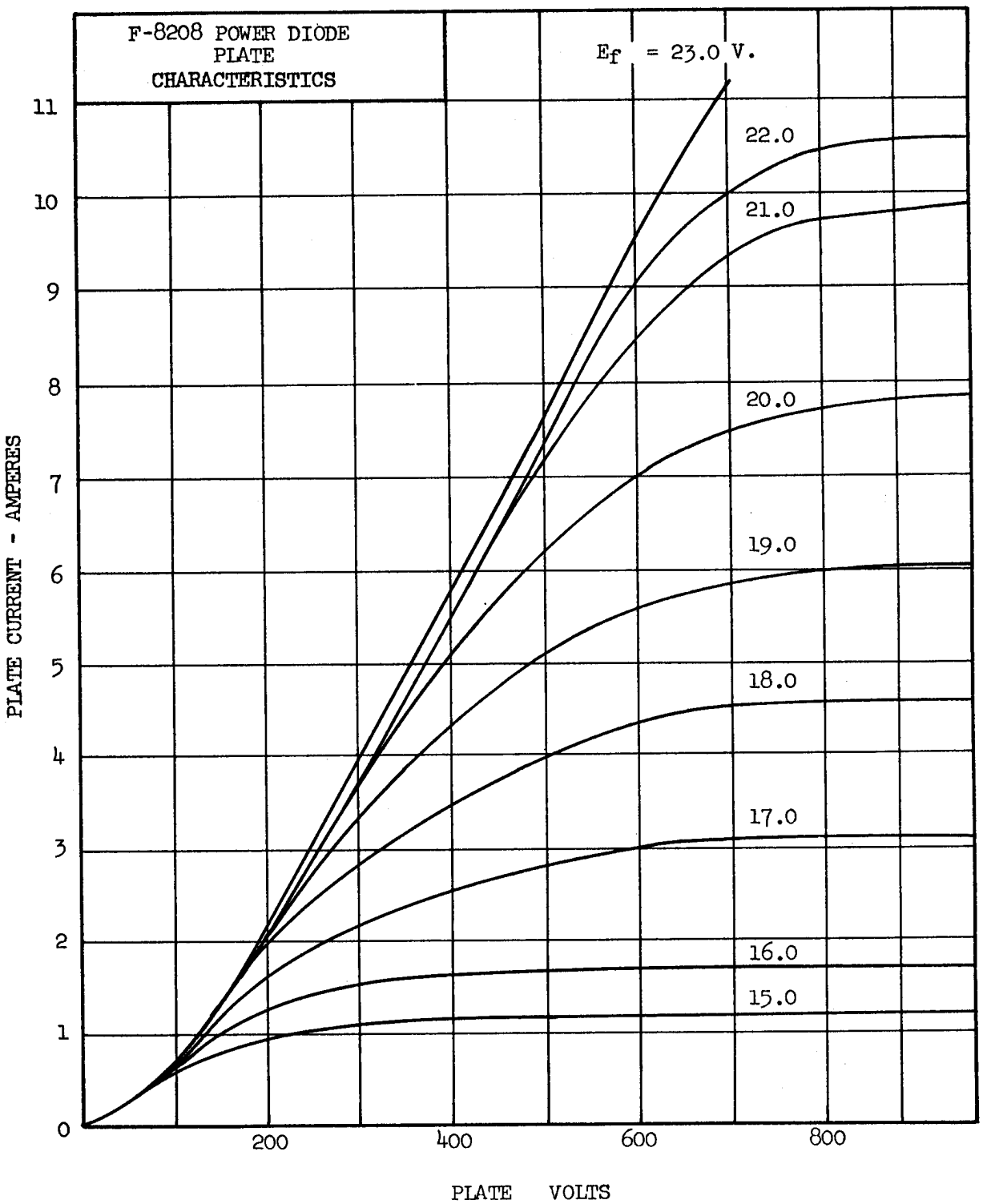

ELECTRON TUBE DEPARTMENT ■ COMPONENTS DIVISION
INTERNATIONAL TELEPHONE AND TELEGRAPH CORPORATION, CLIFTON, NEW JERSEY

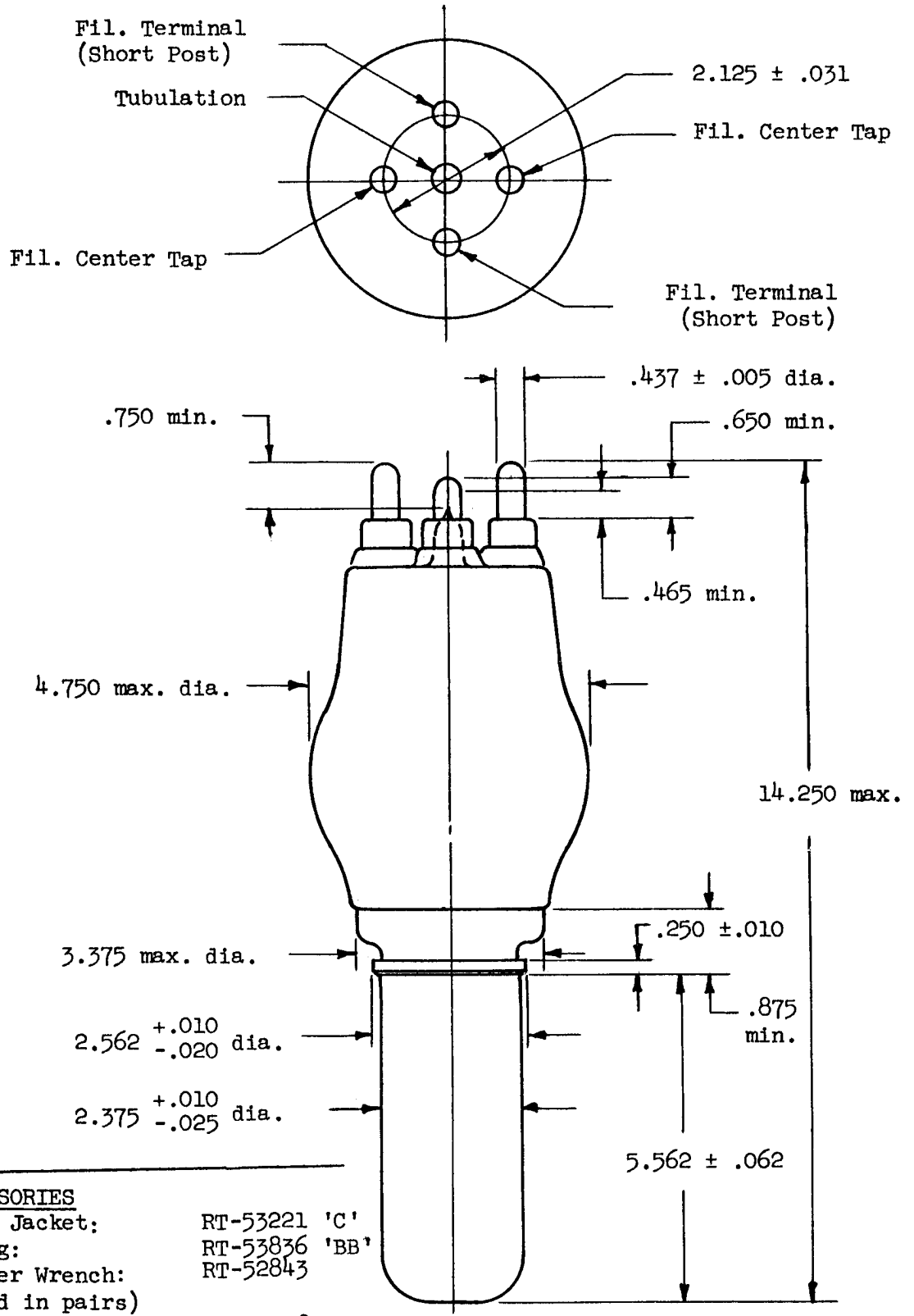

ACCESSORIES

Water Jacket:	RT-53221 'C'
O-Ring:	RT-53836 'BB'
Spanner Wrench: (used in pairs)	RT-52843
Terminal Connector: (2 required)	RT-53978

OUTLINE
F-8208 POWER DIODE

ITT LABORATORIES
FORT WAYNE, INDIANA

COAXIAL PHOTOTUBE

TYPES FW-100 and FW-104

A PRODUCT OF ITT LABORATORIES

Nutley, N. J. • Fort Wayne, Ind. • Chicago, Ill. • San Fernando and Palo Alto, Calif.

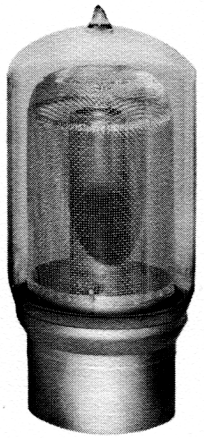

FW-100

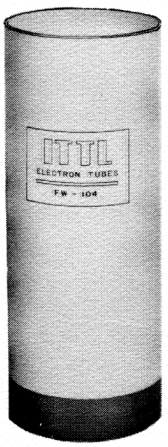

FW-104

The ITTL Coaxial Phototubes are used for detection and measurement of nuclear radiation.

The Coaxial Phototube is a diode of coaxial geometry designed for high current and linear output in conjunction with scintillating material. An S-4 cathode is used having approximately the same peak spectral response location as the emission peak of the fluor. The impedance matches a 50-ohm coaxial line. Recording equipment normally consists of a traveling-wave oscilloscope such as the EG&G 2236.

ELECTRICAL AND OPTICAL DATA:

Type Cathode	S-4
Cathode Luminous Sensitivity	30 microamperes per lumen, average
Cathode Radiant Sensitivity	0.029 microampere per microwatt at 4000A
Maximum Dark Current at 6 Kilovolts	10 x 10^{-9} ampere

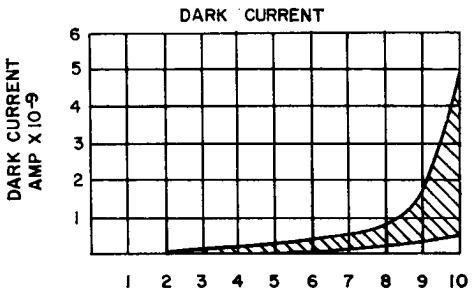

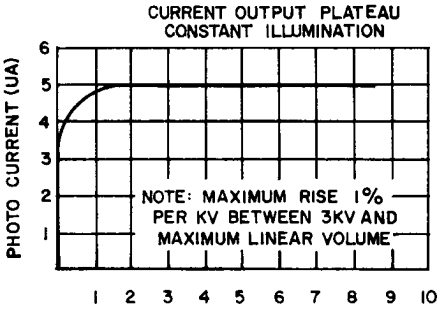

For further information and detailed technical specifications write to the Director, Components and Instrumentation Laboratory, ITT Laboratories, 3700 E. Pontiac St., Fort Wayne, Indiana.

ITT LABORATORIES
FORT WAYNE, INDIANA

IMAGE TUBE

TYPE FW-109

A PRODUCT OF ITT LABORATORIES

Nutley, N. J. • Fort Wayne, Ind. • San Fernando and Palo Alto, Calif.

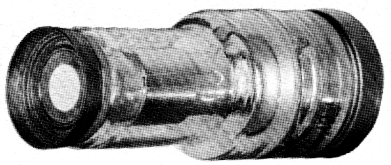

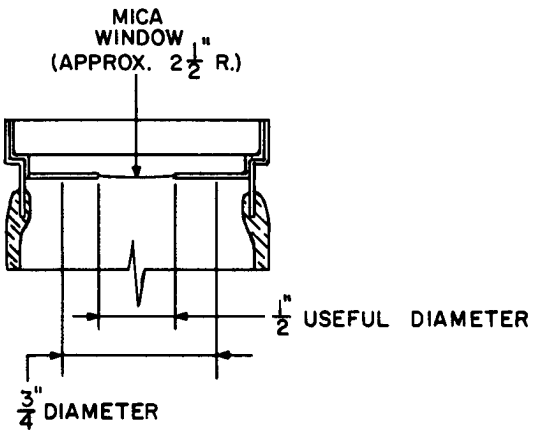

The FW-109 image tube is of the same general geometry as the 6411/IC16 with the exception of the exit face plate which carries the phosphor screen. It has an exit window of very thin film mica (0.0004 inch). Useful diameter is ½ inch. The thin film mica window is hermetically sealed to the anode terminal and tube body and supports atmospheric pressure with a good margin of safety. A photographic film may be brought into intimate contact with the window and the image on the phosphor screen may be photographed directly without the loss of light inherent with even a fast lens system. Because of the small separation of the photographic film and phosphor screen the loss in resolution is minimized.

The FW-109 has found favor as an intensifier for photography of stellar spectra. Gains of 50 to 100 over direct photography have been reported.

The electrical characteristics (operating and focus voltages) are identical to those of the 6411/IC16.

DATA

Cathode	Antimony-cesium
Cathode response	S-11
Cathode sensitivity	
Luminous	30 μa/lumen
Radiant at 4400 Angstroms	0.037 μa/μw
Cathode (useful diameter)	0.970 inch
Phosphor	P-11
Phosphor screen (useful diameter)	0.500 inch
Image magnification (paraxial)	0.68 inch
Resolution at 16 kv operating voltage (paraxial)	45 line pairs/mm

For further information and detailed technical specifications write to the Director, Components and Instrumentation Laboratory, ITT Laboratories, 3700 E. Pontiac St., Fort Wayne, Indiana.

6-60

ITT LABORATORIES
FORT WAYNE, INDIANA

IMAGE INTENSIFIER TUBE

TYPE FW-113

A PRODUCT OF ITT LABORATORIES

Nutley, N. J. • Fort Wayne, Ind. • San Fernando and Palo Alto, Calif.

The FW-113 two-stage cascaded image converter tube is a magnetically focused image intensifier with an S-11 photocathode, sensitive in the visible portion of the spectrum. The tube consists of two magnetically focused image converter tubes, cascaded in a single glass envelope, the output of the first communicating with the input of the second through a thin transparent window. The two sections of the tube are diodes, with one electrode common, and only three electrical connections are necessary for operation. A minimum of light and image detail is lost in the thin-film coupling, and the output is a greatly intensified replica of the input image. Magnetic focusing assures uniform, high resolution over the entire viewing screen area. The magnet establishes an essentially uniform focusing field axially of the tube. An electromagnet may also be used for focusing, and would afford the advantage for experimentation that focusing could be achieved at different tube operating voltages. Either a P-20 screen for visual observation of the output image, or a P-11 to match the input response of photosensitive devices and photographic plates can be supplied.

Because of immediate widespread interest in the tube for experimental purposes, an objective specification indicative of the state of the art is available, based upon limited test data from a few developmental tubes.

FW-113 Characteristics (objective)

Electrical Characteristics (1):		
First stage	-10 ± 2	kv
Second stage	$+10 \pm 2$	kv
Focusing magnetic flux density	475	gauss
General Characteristics:		
Input cathode surface	S11	
Output phosphor screen (2)	P20	
Useful cathode diameter	1.5	inches
Useful phosphor screen diameter	1.5	inches
Image magnification (3)	0.9 - 1.0	
Resolution, paraxial	15	line pairs/mm
Resolution at 0.675 inch R	15	line pairs/mm
Background screen brightness (4)	2	μ lambert
Overall luminous sensitivity (5)	1000	μa/lumen
Brightness gain (6)	400	
Maximum input illumination	1	foot-candle

Image Intensifier

(1) Independent voltage controls are required to focus each stage. Voltages given are design values for the specified magnetic focusing field strength, but other values of E and H may be determined from the approximate relationship $H \alpha \sqrt{E}$. Lower values of E with a consequent reduction of brightness gain can be used to reduce the mean background screen brightness. The upper value of E, 12 kv/stage, is specified on the basis of a suitable margin of safety regarding destructive internal glow or flashover.

(2) P-11 phosphor also available.

(3) Image magnification and distortion are dependent upon the uniformity of the magnetic focusing field.

(4) Cathode not illuminated; temperature 25 degrees C.

(5) Ratio of phosphor screen current to cathode illumination from a standard tungsten light source, 2870 degrees K color temperature.

(6) The quotient of luminous output flux, in terms of visual excitation, divided by cathode illumination flux from a standard tungsten light source. With a P-11 phosphor, fluorescent in the blue, the brightness gain would be 100. Specified in terms of S-11 cathode response, brightness gain with a P-11 phosphor would be 1200.

For further information and detailed technical specifications write to the Director, Components and Instrumentation Laboratory, ITT Laboratories, 3700 E. Pontiac St., Fort Wayne, Indiana.

ITT LABORATORIES
FORT WAYNE, INDIANA

HIGH-CURRENT PHOTOTUBE

FW-114

A PRODUCT OF ITT LABORATORIES

Nutley, N. J. • Fort Wayne, Ind. • Chicago, Ill. • San Fernando and Palo Alto, Calif.

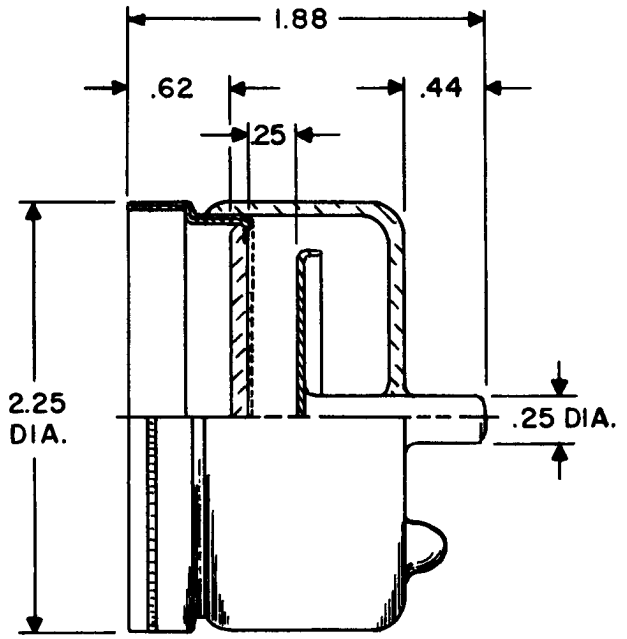

The FW-114 High-Current Phototube has a current output linear from 10^{-9} ampere to 25 amperes

The FW-114 is a biplanar type photodiode designed for close optical coupling to a flat disc scintillator accommodated in the face-plate cavity of the tube. It is one of a family of high current capacity phototubes developed by ITTL which have become standard items for measurement of high-density gamma radiation of short time duration. Using a scintillation phosphor, the FW-114 phototube can be used to monitor cosmic rays, X rays, and nuclear particles. Since the dark current at 2500 volts is 10^{-9} ampere (average) and the output of the tube is linear up to 25 amperes, the maximum dynamic range of the FW-114 is 2.5×10^{10}. The useful dynamic range is therefore limited only by the characteristics of the associated circuitry. Two other sizes available are the FW-127, which is 5 inches in diameter, and the FW-128, which is 1-¼ inches in diameter.

Other tubes of this type available from ITTL are the FW-100, where the scintillator takes the form of a cylinder surrounding the tube, and the FW-104, where radiation from the scintillator enters the phototube through a circular window.

For further information and detailed technical specifications write to the Director, Components and Instrumentation Laboratory, ITT Laboratories, 3700 E. Pontiac St., Fort Wayne, Indiana.

ITT LABORATORIES
FORT WAYNE, INDIANA

IMAGE TUBE

TYPE FW-116

A PRODUCT OF ITT LABORATORIES

Nutley, N. J. • Fort Wayne, Ind. • San Fernando and Palo Alto, Calif.

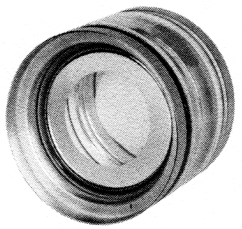

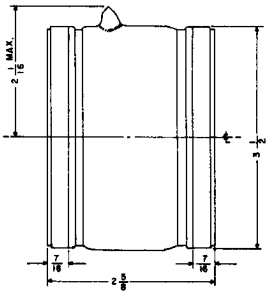

The FW-116 is a unipotential magnetically focused image tube capable of high resolution and low distortion. The tube may be operated under static or pulsed conditions and is intended (by reason of its P-11 type phosphor screen) for photographic applications rather than direct viewing.

PRELIMINARY DATA

Cathode	Cesium-antimony
Cathode response	S-11
Cathode sensitivity	
Luminous	30 μa/lumen
Radiant	0.03 μa/μw
Cathode useful area	1½ inch diameter
Phosphor	
Type	P-11
Useful area	1½ inch diameter
Image	
Magnification (paraxial)	1 (approximately)
Resolution (paraxial)	50 line pairs/mm *
Distortion	**
Anode voltage (static)	10 kv***
Magnetic field strength	450 Gauss

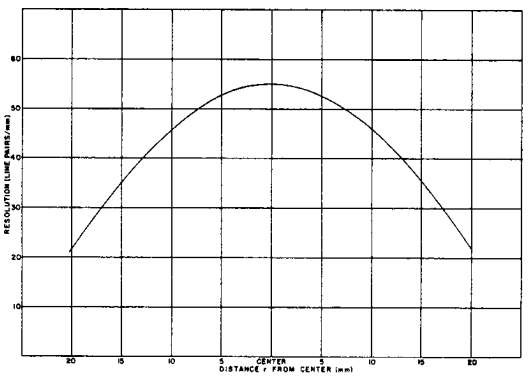

Characteristic resolution curve with tube immersed symmetrically in cylindrical solenoid (uniform winding) and focused for maximum resolution in center of field. Dimensions of solenoid: 7½ inches long, 9½ inches OD, 4¾ inches ID.

* Depending on uniformity of magnetic field.

** Since distortion is a function of magnetic field uniformity, no figure can be specified. Nonuniformity results in both image rotation and S distortion; however, even with relatively nonuniform fields the image quality is inherent superior to that obtained with a purely electrostatic lens system. The tube is normally operated immersed in the most uniform region of a solenoid; however, very acceptable image reproduction may be had using a squirrel-cage array of uniformly distributed ⅜ inch diameter by 6 inch length Alnico rod magnets, 48 in number.

*** Normally, an image tube may be operated for short time intervals at approximately four times rated anode voltage without increase in background.

For further information and detailed technical specifications write to the Director, Components and Instrumentation Laboratory, ITT Laboratories, 3700 E. Pontiac St., Fort Wayne, Indiana.

6-60

ITT INDUSTRIAL LABORATORIES

APPLICATION NOTES

Barrier-Grid Storage Cathode-Ray Tube

Type FW-202

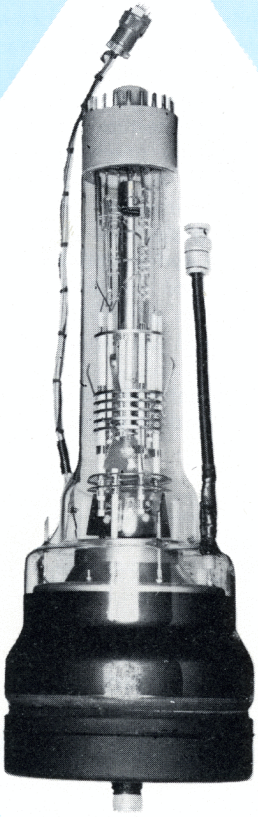

BACKGROUND CANCELLATION FOR AREA MTI — BINARY INFORMATION STORAGE, RANDOM ACCESS — IMAGE STORAGE — SCAN CONVERSION

The FW-202, 5-inch Barrier-Grid Storage Tube possesses two important properties: first, if a pattern of repetitive signals is applied to the metallic target substrate in synchronism with the scanning electron beam, no signal will appear at the output of the tube after a few cycles, and second, excellent registration is obtained between the writing and reading patterns. If a moving signal is present in this pattern of repetitive signals (i.e., the background pattern) only the moving signal will appear in the output. For example, if a PPI radar pattern containing appreciable clutter is applied to the input of the tube, only moving objects in the area will be present as signals at the output of the device. The second property is most useful for binary information storage, random access operation, as in the high-speed working store of a computer where very accurate registration is required from write to read. The tube can also be used for signal-to-noise improvement because of the integrating property of the storage surface and the fact that the signal builds up at a faster rate than the random noise background. In addition, the device can be used for storing images and for scan conversion applications.

COMPONENTS and INSTRUMENTATION Laboratory
Fort Wayne, Indiana

A DIVISION OF INTERNATIONAL TELEPHONE AND TELEGRAPH CORPORATION

PRINCIPLES OF OPERATION

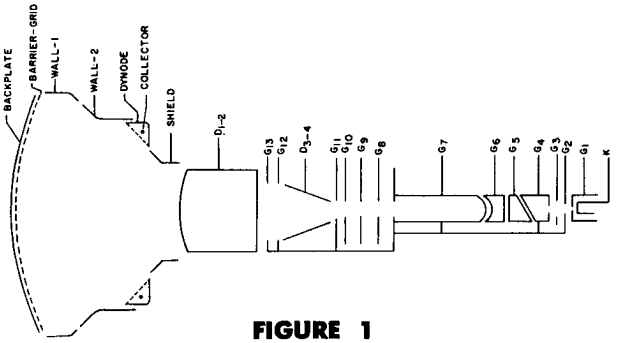

FIGURE 1

The tube is an electrical input, electrical output device. The tube utilizes a single, electrostatically focused and deflected gun which is used for writing in and reading out the information on a solid, spherically curved target. The target consists of a metal bowl with a thin dielectric layer fused to its concave side and a curved, fine-mesh screen in turn fused to the dielectric surface. The center of deflection of the gun coincides with the center of curvature of the target assembly. A collector electrode and an associated electron optical system for focusing the signal electrons from the target onto the collector electrode are positioned between the gun and target. The tube is shown schematically in Figure 1.

THE STORAGE MECHANISM

The target of the Barrier-Grid Storage Tube consists essentially of an array of elemental capacitors which are charged or discharged by the action of the electron beam. The beam is operated at a velocity such that the secondary emission ratio of the dielectric surface is greater than unity. The secondaries leave the surface with a velocity distribution which is essentially Maxwellian as shown in Figure 2. A cross-sectional view of a target element is shown in Figure 3 with the charging capacitances indicated. If the storage surface is at barrier-grid potential and the target is scanned by the beam, all of the secondary electrons generated at the surface leave the target and go to the collector. More electrons leave than arrive so that a net positive charge is established on the storage surface. The secondaries now encounter a decelerating field which must be traversed before they can exit from the barrier-grid aperture. This decelerating field forces the electrons having inadequate energy to transverse it to return to the storage surface within the aperture in which they are generated because the barrier grid is fused to the storage surface. This is a feature unique to the FW-202. As more and more secondaries are produced by the bombarding beam the potential of the storage surface becomes increasingly positive until the number of secondaries passing out of the barrier-grid apertures to the collector just equals the number of bombarding electrons arriving at the storage surface. The potential of the storage surface at this point is the equilibrium potential. If the storage surface potential becomes more positive than this value fewer electrons leave than arrive, so that a net negative charge is accumulated on the storage surface and the potential shifts in the negative direction until the equilibrium level is again reached. The equilibrium potential, Vo, is indicated in Figure 2. The area under the curve to the right of this point represents escaping secondary current and just equals the incident beam current.

Writing is accomplished by shifting the backplate either positive or negative and bombarding the target with the electron beam. Using Figure 3, writing may be accomplished by applying a –40 volt pulse to the backplate (the barrier grid is normally grounded). This

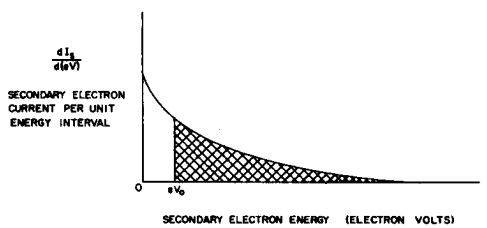

FIGURE 2

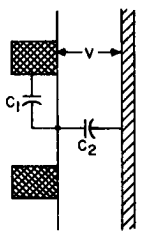

FIGURE 3

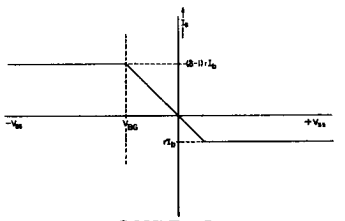

FIGURE 4

shifts the storage surface negative by an amount ΔV determined by the relative values of C1 and C2, from the equilibrium level which in turn is some 4 volts positive with respect to the barrier grid. The secondaries generated by the writing beam bombarding the storage surface now encounter an accelerating field and all secondaries escape to the collector until the storage potential reaches that of the barrier grid. The escaping secondaries again establish the decelerating field as described above and fewer and fewer secondaries escape to the collector until the equilibrium level is again reached. The instantaneous charging or signal current as a function of a negative storage surface potential is shown in the left side of Figure 4. The maximum value represents the secondary current comprised of electrons having energies less than eVo of Figure 2, i.e., the total secondary current generated by the beam at the dielectric surface less the primary bombarding beam current arriving at the surface. Actually, the total beam current does not arrive at the dielectric surface since a certain portion is intercepted by the barrier-grid mesh. If the transmission ratio of the mesh is r, then the beam current arriving at the dielectric surface is rIb. The maximum signal is then (6 – 1) rIb.

During saturation writing the storage surface is charged ΔV volts positive or to the equilibrium level. Prior to reading, the backplate is returned 40 volts to barrier-grid potential. As a result of the charging during writing, the storage surface is now ΔV volts positive with respect to the equilibrium level. Reading consists of discharging the storage surface to the equilibrium level. The instantaneous discharging or signal current as a function of the positive storage surface potential is shown in the right side of Figure 4. The maximum current level is produced by those electrons having energies greater than eVo of Figure 2 and is numerically equal to the bombarding current reaching the dielectric surface or rIb.

It is also possible to write with the backplate positive; the above sequence is then reversed and reading occurs with the storage surface negative with respect to the equilibrium level. Actual signal current characteristics as a function of backplate potential are shown in Figure 5.

The video can be applied to the control grid of the electron gun or the backplate. The output can be obtained from either the collector or backplate. Coaxial leads are provided to both output signal electrodes.

THE ELECTRON GUN

The electron gun is a unique gun designed to deliver a relatively high current into a small spot and to permit this small spot size to be maintained constant while the beam is deflected through a maximum angle of 60 degrees. The high current combined with small, uniform spot size permits the simultaneous achievement of high charging rates, high resolution, and high output signal levels.

The electron beam, after passing through the G1 aperture goes through the crossover and into the condenser lens formed by G2, G3, and G4 where it is condensed onto a small aperture in G4 by G3. Electrodes G4, G5, G6, and G7 form a drift tube which permits the beam passing through the G4 aperture to expand about 20 diameters before entering the main focusing lens. Electrodes G5 and G6 form crossed prismatic lenses with G4 and G7. Focusing at the center of the tube is accomplished through adjustment of quiescent potentials applied to lens electrodes G8, G9 and G10. The main dynamic focusing voltages are applied to G8 and G10 which are aligned with the rear and front deflection plates respectively. A dynamic correction is also required for G8. The crossed prismatic lenses center the beam in the exit aperture of G7.

In setting up the tube, G3, G5, and G6 are adjusted until maximum beam current is achieved. The effect of G3 on the beam current is shown in Figure 6. A control grid characteristic with G3 set for maximum current is shown in Figure 7.

ELECTRICAL DATA

Target Section[1]

Barrier grid — backplate capacitance	6500 $\mu\mu$f
Barrier grid	0 volts
Backplate	±50 volts

Collector Section

Collector capacitance	17 $\mu\mu$f
Wall No. 1	±25 volts
Wall No. 2	±25 volts
Collector	+180 volts
Shield	–90 to –200 volts
Dynode	+90 volts

[1] Barrier grid is connected internally to the metal seal rings at front of tube and thus is connected to the outside conductor of the coax; the backplate being connected to the center conductor of the coax.

Writing - Reading Gun [2] [3]

Heater	6.3 volts, 0.6 ampere
K	–1500 volts
G1	–1600 volts max.
G2, 4, 7, 11, 12, 13	0 volts
G3	–1100 to –1500 volts
G5	±250 volts
G6	±250 volts
G8, G9, G10	–700 to –900 volts
Mean deflection potential	0 volts
Deflection factor:	
D1 - D2	700 volts peak to peak,
D3 - D4	push-pull deflection for diametral scan.

[2] Adjust G3, G5, G6 for Ib maximum at zero bias.

[3] Adjust G8, G9, and G10 for minimum circular spot size.

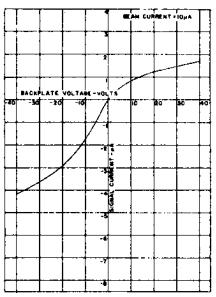

FIGURE 5

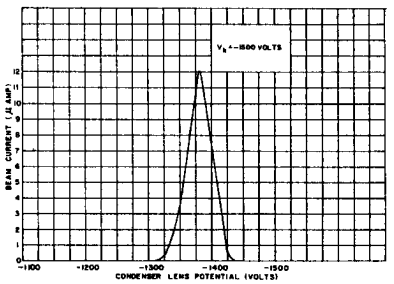

FIGURE 6

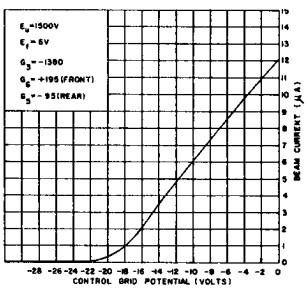

FIGURE 7

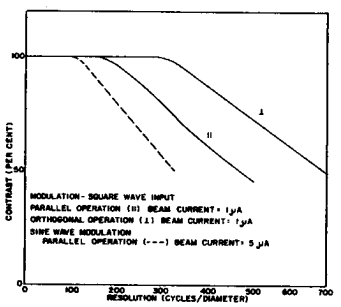

FIGURE 8

PERFORMANCE DATA

Resolution	Scanning: 400 cycles/diameter square wave modulation, parallel write-read at 50 percent contrast (1200 TV lines/diameter at 50 percent contrast for orthogonal write-read). See Figure 8. Step deflected (computer) — Shrinking raster 58,000 (240 bits by 240 bits) at 100 percent contrast.
Shading	Collector readout: negligible.
Cancellation ratio	Collector readout: 20 to 1.
Charging factor	100 μsec/diametral scan to 80 percent of saturation level for Vp = –40 volts step scan: Vp = +40 volts, 1.5 μsec to 60 percent of saturation.
Discharge factor	100 μsec diametral scan, second read less than 70 percent of first read. Step scan — second read less than 10 percent first read for 3 μsec read.
Integration or gray scale	Shall be possible to distinguish 15 separate writing levels in the output signal.
Readaround ratio	16 readarounds with an inscribed raster of 120 bits by 120 bits at 50 percent contrast.

OUTLINE DRAWING—CONNECTIONS

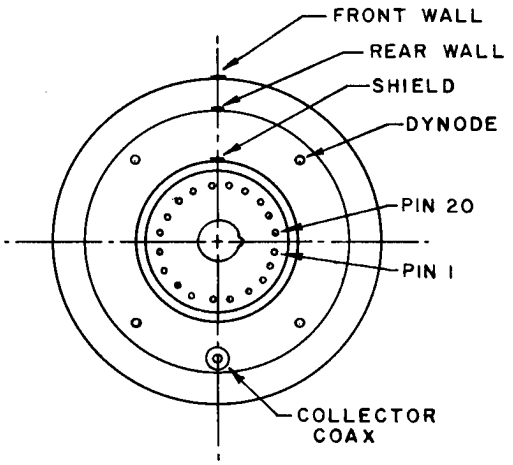

BASE PIN CONNECTIONS JEDEC 820 120

PIN 1. HEATER
2. CATHODE
3. GRID #1
4. NO CONNECTION
5. GRID #8 (FOCUS #1)
6. GRID #9 (FOCUS #2)
7. GRID #5 (CENTER #1)
8. GRID #6 (CENTER #2)
9 NO CONNECTION
10. DEFLECTION ELECTRODE #3
11. DEFLECTION ELECTRODE #4
12. INTERNAL CONNECTION
13. DEFLECTION ELECTRODE #1
14. DEFLECTION ELECTRODE #2
15. GRID #2, 4, 7, 11, 12, & 13
16. NO CONNECTION
17. GRID #10 (FOCUS #3)
18. GRID #3
19. NO CONNECTION
20. HEATER

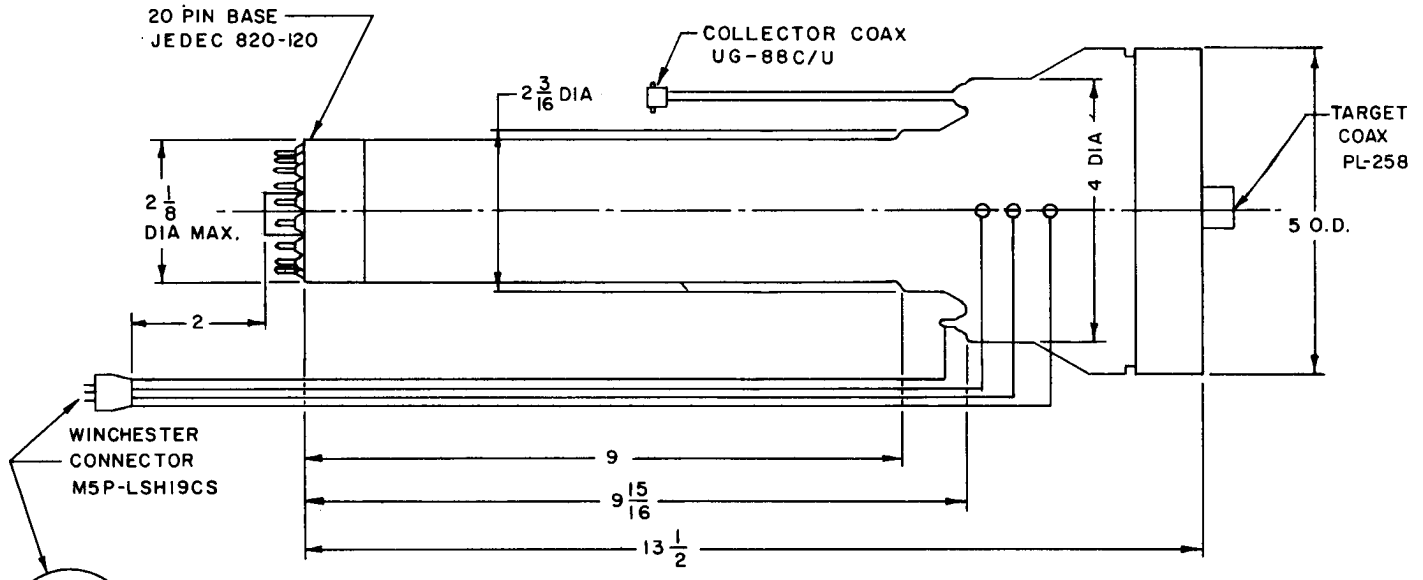

LEAD CONNECTIONS
PIN LETTER — A-WALL NO. 1
B-WALL NO. 2
C-DYNODE
E-SHIELD
H-NO CONNECTION

The Components and Instrumentation Laboratory developments range from basic research to pilot production, with contributions to the electronics industry over the years being varied and impressive. Other recent developments include the following:

Barrier-grid storage tubes
Pulsed infrared storage tubes
Transparent phosphors
Infrared detectors
Stored nitrogen containers
AN/AAG-5 IR Search Set
AN/AAR-21 IR Search-Track Set

Direct view storage tubes
High current multipliers
Multialkali cathodes
Mosaic infrared cells
Switching tubes
Telephone line TV systems
Underwater TV systems
Advanced display systems

Image converter, 7177
Shutter tube, 6839
Coaxial phototubes
Cryostats
Flaw inspectors
Storage tube radar indicators
Storage tube IR indicators

Address inquiries to: Director, Components and Instrumentation Laboratory, ITT Industrial Laboratories
3700 E. Pontiac Street, Fort Wayne, Indiana **Telephone Eastbrook 7571**

TENTATIVE

DESCRIPTION:

THE FW-204 IS A 5 INCH IATRON (DIRECT VIEW STORAGE CATHODE-RAY TUBE) THAT PRODUCES A BRIGHT VISUAL DISPLAY OF ELECTRICALLY STORED INFORMATION. IT IS ELECTROMAGNETICALLY FOCUSED AND DEFLECTED. THE TUBE DISPLAYS BRIGHT IMAGES ON A DARK BACKGROUND THAT CAN BE VIEWED IN DIRECT DAYLIGHT, AND FEATURES THE ABILITY TO WRITE, STORE, AND ERASE INFORMATION AT WILL. GREY SHADES ARE PRODUCED IN ACCORDANCE WITH THE AMPLITUDE VARIATION OF THE INPUT SIGNAL. THE TUBE HAS TWO CONCENTRIC ELECTRON GUNS, A WRITING GUN, WHICH WRITES THE INPUT SIGNAL ON A STORAGE MESH, AND A FLOOD GUN, WHICH ILLUMINATES THE PHOSPHOR IN ACCORDANCE WITH THE STORED SIGNAL. THE CONCENTRIC ARRANGEMENT OF THE GUNS REDUCES DISTORTION OF THE WRITING BEAM TO A MINIMUM.

GENERAL:

DIMENSIONS	SEE OUTLINE AND FUNCTIONAL SCHEMATIC	
NOMINAL TUBE DIAMETER	5	INCHES
MINIMUM USEFUL DISPLAY DIAMETER	4	INCHES
PHOSPHOR	P-20	ALUMINIZED
OPERATING POSITION		ANY
CATHODE PRE-HEATING TIME	60	SECONDS
FOCUS		MAGNETIC
DEFLECTION		MAGNETIC

TYPICAL OPERATING VOLTAGES:

			FLOOD SECTION
VIEWING SCREEN	∱10	KV DC	600 UA MAXIMUM
BACKING ELECTRODE	∱10	VDC	AND ERASE PULSES
COLLECTOR	∱150	VDC	1.0 MA
ANODE #5	∱100	VDC	25 UA
ANODE #4	∱20	VDC	200 UA
ANODE #3	∱16	VDC	300 UA
ANODE #2	∱45	VDC	3000 UA
ANODE #1	∱12	VDC	25 MA
CATHODE	0	VDC	30 MA
HEATER	6.3	V AC OR DC	2.1 A

* TRADEMARK OF THE INTERNATIONAL TELEPHONE & TELEGRAPH CORPORATION

WRITE SECTION

CATHODE	-2500	VDC	2 MA
GRID #1 (CUTOFF - NOTE 1)	-50	VDC	RESPECT WRITE CATHODE
GRID #2	0	VDC	2 MA
HEATER	6.3	V AC OR DC	.6 A

RANGE OF OPERATING ADJUSTMENTS:

ANODE #1	0 TO 20	VDC	ADJUST FOR BEST COLLIMATION
ANODE #2, 3, 4	0 TO 50	VDC	ADJUST FOR BEST COLLIMATION
ERASE PULSES	3 - 10	V	AMPLITUDE 1/2 U/SEC. WIDE 75 TO 4000 PRF

TYPICAL PERFORMANCE:

RESOLUTION (NOTE 2)		
200 FT. LAMBERTS	125	LINES PER INCH
2000 FT. LAMBERTS	35	LINES PER INCH
BRIGHTNESS	2500	FT. LAMBERTS
WRITING SPEED		
ZERO BIAS WRITING TO 80% BRIGHTNESS	150,000	IN/SEC.
ERASE TIME (NOTE 3)	5	MILLISECONDS
VIEWING TIME (NOTE 4)	30	SECONDS MAXIMUM

NOTES:

1. VISUAL CUTOFF OF STORED, FOCUSED, UNDEFLECTED SPOT.

2. MEASURED BY THE SHRINKING RASTER METHOD AT THE CENTER OF THE TUBE.

3. ERASE TIME IS THE SHORTEST TIME THAT INFORMATION CAN BE REMOVED FROM THE TUBE AFTER BEING STORED AT FULL BRIGHTNESS.

4. VIEWING TIME IS THE TIME THAT A SIGNAL STORED AT FULL BRIGHTNESS ANYWHERE IN THE DISPLAY CAN BE VIEWED WITH ERASE PULSES APPLIED TO COUNTERACTION WRITING.

*TRADEMARK OF ITT

SPECIAL PRECAUTIONS:

OBSERVE MAXIMUM RATINGS TO AVOID POSSIBLE DAMAGE TO THE TUBE. IN PARTICULAR THE VIEWING SCREEN VOLTAGE SHOULD BE LIMITED SO AS TO NEVER EXCEED 12 KV.

THE FULL VOLTAGE SHOULD NOT BE APPLIED TO THE VIEWING SCREEN INSTANTANEOUSLY. AN ORDINARY RC FILTER AT THE OUTPUT OF THE POWER SUPPLY WILL PROVIDE ADEQUATE ASSURANCE THAT THE VOLTAGE BUILD UP WILL NOT BE TOO ABRUPT. THE VIEWING SCREEN POWER SUPPLY SHOULD HAVE A SERIES RESISTANCE OF AT LEAST 1 MEG OHM.

REPEATED BOMBARDMENT WITH A HIGH CURRENT FOCUSED BEAM ON A SMALL AREA OF THE STORAGE SURFACE CAN BURN A DARK IMAGE INTO THE DISPLAY, WHICH MAY REMAIN FOR SEVERAL HOURS OR EVEN PERMANENTLY. THEREFORE, THE DEFLECTION VOLTAGES SHOULD BE APPLIED BEFORE OPERATING THE WRITING BEAM.

ADDITIONAL INFORMATION FOR SPECIFIC APPLICATIONS CAN BE OBTAINED FROM THE

ELECTRON TUBE APPLICATIONS SECTION
ITT COMPONENTS DIVISION
POST OFFICE BOX 412
CLIFTON, NEW JERSEY

* TRADEMARK OF THE INTERNATIONAL TELEPHONE & TELEGRAPH CORPORATION

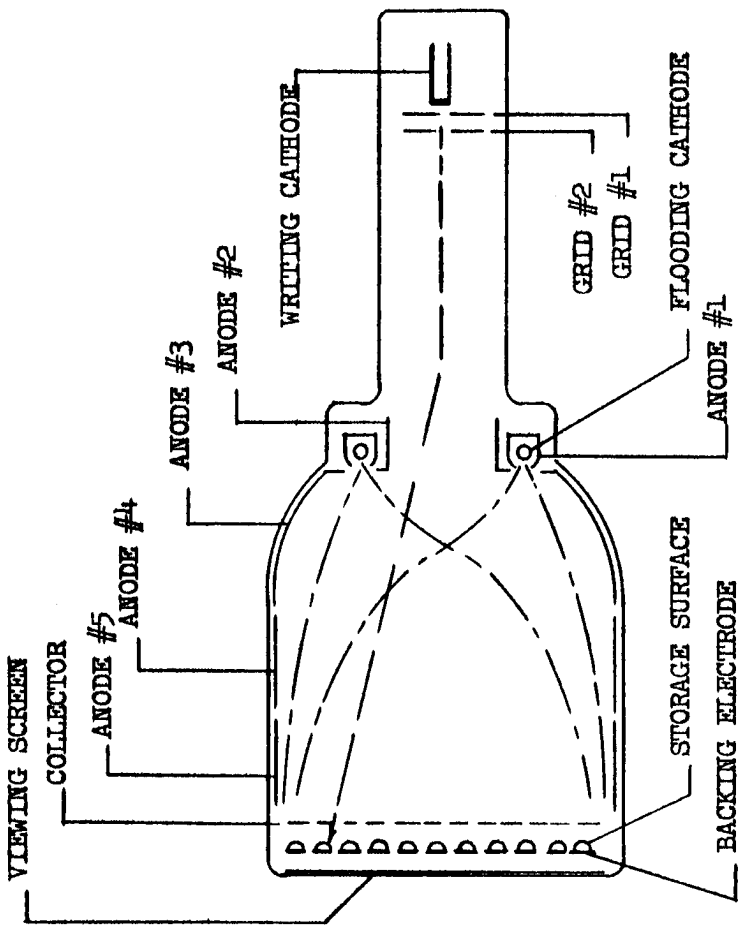
VIEWING SCREEN
COLLECTOR
ANODE #5
ANODE #4
ANODE #3
ANODE #2
WRITING CATHODE
GRID #2
GRID #1
FLOODING CATHODE
ANODE #1
STORAGE SURFACE
BACKING ELECTRODE

FW-204

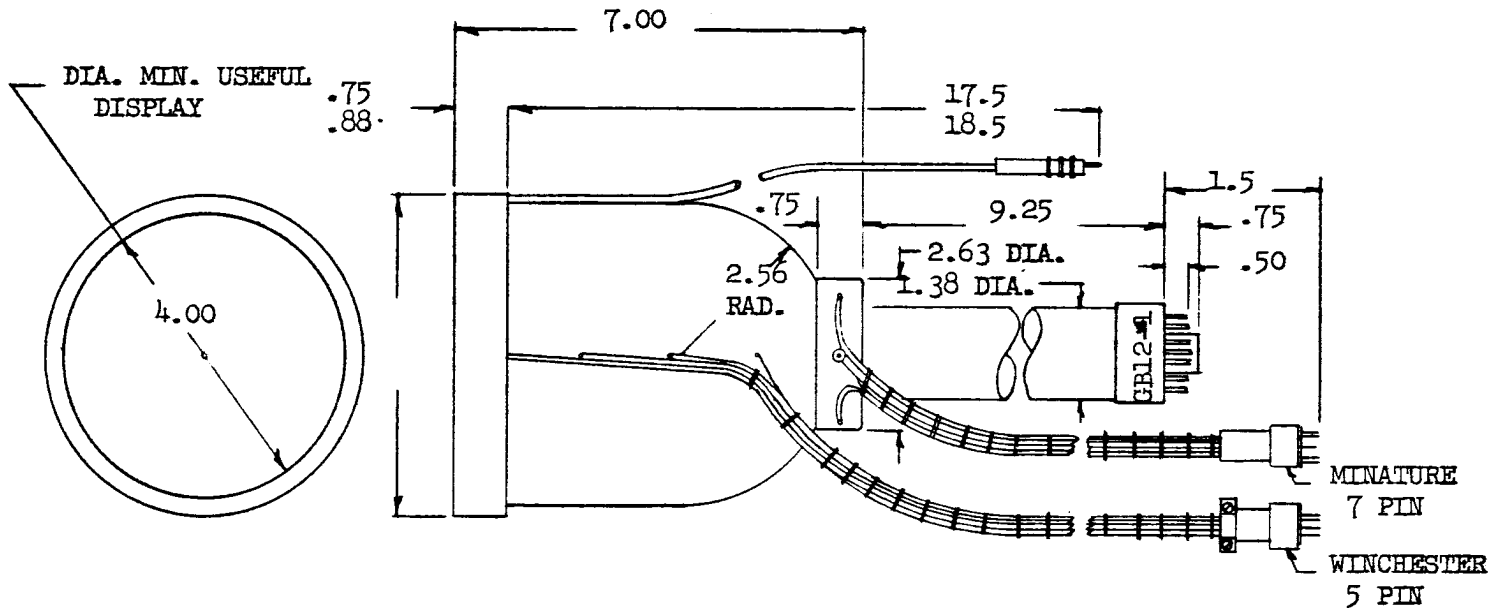

1. GRID #1
2. WRITING GUN CATHODE
3. WRITING GUN HEATER
4. WRITING GUN HEATER
5. NO CONNECTION
6.
7.
8.
9.
10. NO CONNECTION
11. GRID #2
12. NO CONNECTION

1. ANODE #1
2. NO CONNECTION
3. FLOODING GUN HEATER
4. FLOODING GUN HEATER
5. ANODE #2
6. NO CONNECTION
7. FLOODING GUN CATHODE

A. ANODE #3
B. ANODE #4
D. BACKING ELECTRODE
E. COLLECTOR
H. ANODE #5

ELECTRON TUBE DEPARTMENT ■ COMPONENTS DIVISION
INTERNATIONAL TELEPHONE AND TELEGRAPH CORPORATION, CLIFTON, NEW JERSEY

TENTATIVE

DESCRIPTION:

THE FW-208 IS A 7.5 INCH IATRON (DIRECT VIEW STORAGE CATHODE-RAY TUBE) THAT PRODUCES A BRIGHT VISUAL DISPLAY OF ELECTRICALLY STORED INFORMATION. IT IS ELECTROMAGNETICALLY FOCUSED AND DEFLECTED. THE TUBE DISPLAYS BRIGHT IMAGES THAT CAN BE VIEWED IN DIRECT DAYLIGHT, AND FEATURES THE ABILITY TO WRITE, STORE, AND ERASE SIGNAL INFORMATION AT THE WILL OF THE OPERATOR. GREY SHADES ARE PRODUCED IN ACCORDANCE WITH THE AMPLITUDE VARIATIONS OF THE INPUT SIGNAL. THE TUBE HAS TWO ELECTRON GUNS, A WRITING GUN, WHICH WRITES THE INPUT SIGNAL ON A STORAGE MESH, AND A FLOOD GUN WHICH ILLUMINATES THE PHOSPHOR IN ACCORDANCE WITH THE STORED SIGNAL.

GENERAL:

DIMENSIONS	SEE OUTLINE AND FUNCTIONAL SCHEMATIC	
MINIMUM USEFUL DISPLAY DIAMETER	6.0	INCHES
NOMINAL TUBE DIAMETER	7.5	INCHES
PHOSPHOR	P-20	ALUMINIZED
OPERATING POSITION		ANY
CATHODE PRE-HEATING TIME - NOTE 1	30	SECONDS
FOCUS		MAGNETIC
DEFLECTION		MAGNETIC

OPERATING VALUES AND TYPICAL PERFORMANCE CHARACTERISTICS:

	FLOOD SECTION		
VIEWING SCREEN	+10	KV	
BACKING ELECTRODE	+10	VDC	
COLLECTOR	+150	VDC	
ANODE #4	+75	VDC	
ANODE #3	+10 TO +30	VDC	ADJUSTABLE SEE NOTE 2
ANODE #2	0 TO +80	VDC	ADJUSTABLE INTERNALLY CONNECTED TO GRID #2 SEE NOTE 2
ANODE #1	+60	VDC	
CATHODE	0		
HEATER	6.3	V	1.4 AMPERES NOMINAL AC OR DC

* TRADEMARK OF THE INTERNATIONAL TELEPHONE & TELEGRAPH CORPORATION

WRITING SECTION

CATHODE	-2500	VDC
GRID #1 CUTOFF	-30	VDC RESPECT CATHODE SEE NOTE 3
GRID #2	0 TO +80	INTERNAL CONNECTION TO ANODE #2
HEATER - SEE NOTE 4	6.3	VOLTS .6 AMPERES NOMINAL AC OR DC
RESULUTION - SEE NOTE 5		
125 FT. LAMBERTS	80	LINES PER INCH
625 FT. LAMBERTS	55	LINES PER INCH
1000 FT. LAMBERTS	40	LINES PER INCH
BRIGHTNESS	1250	FT. LAMBERTS
WRITING SPEED		
WRITING TO 50% BRIGHTNESS	40000	INCHES PER SECOND - SEE NOTE 6
VIEWING TIME - SEE NOTE 7	60	SECONDS MINIMUM
ERASE TIME - SEE NOTE 8	30	MILLISECONDS

NOTES:

1. MINIMUM TIME RECOMMENDED FOR CATHODE WARM-UP BEFORE OPERATING VOLTAGES ARE APPLIED.

2. ADJUST FOR BEST COLLIMATION OF FLOOD BEAM.

3. VISUAL CUTOFF OF FOCUSED, UNDEFLECTED, STORED SPOT.

4. HEATER TRANSFORMER CENTER TAP SHOULD BE CONNECTED TO CATHODE VOLTAGE.

5. RESOLUTION MEASURED BY THE SHRINKING RASTER METHOD AT THE CENTER OF TUBE.

6. MEASURED WITH 25 VOLTS VIDEO DRIVE ABOVE 1/2 UA BEAM CURRENT BIAS LEVEL.

7. VIEWING TIME IS THE TIME THAT A SIGNAL STORED AT MAXIMUM BRIGHTNESS ANYWHERE IN THE DISPLAY CAN BE VIEWED WITH ERASE PULSES BEING CONTINUOUSLY APPLIED TO COUNTERACT POSITIVE ION CHARGING OF THE STORAGE SURFACE.

8. ERASE TIME IS THE SHORTEST TIME THAT INFORMATION CAN BE REMOVED AFTER BEING STORED AT FULL BRIGHTNESS.

ADDITIONAL INFORMATION FOR SPECIFIC APPLICATIONS CAN BE OBTAINED FROM THE

ELECTRON TUBE APPLICATIONS SECTION
ITT COMPONENTS DIVISION
POST OFFICE BOX 412
CLIFTON, NEW JERSEY

* TRADEMARK OF THE INTERNATIONAL TELEPHONE & TELEGRAPH CORPORATION

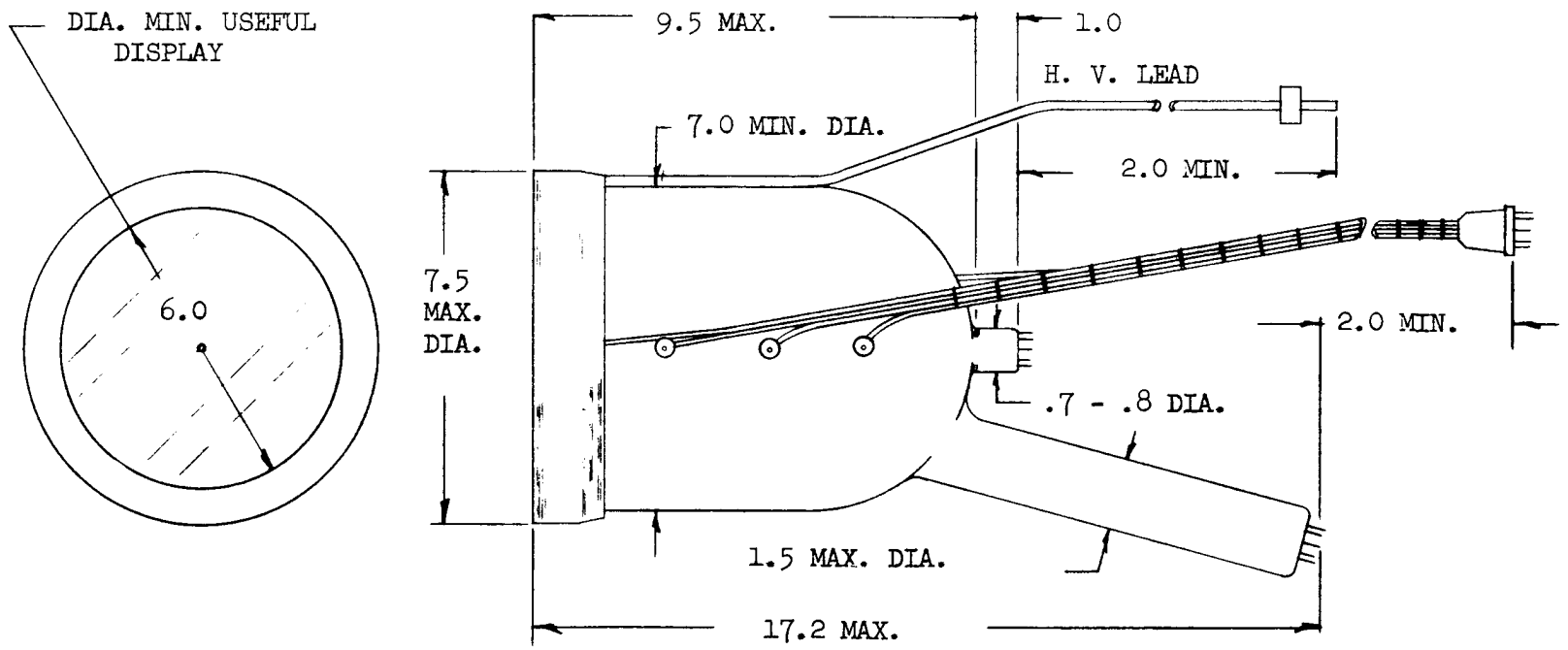

	FLOODING GUN BASE		WRITING GUN BASE		7 PIN MINIATURE
PIN	1. ANODE 1	PIN	1. GRID 1	PIN	1. BACKING ELECTRODE (GREEN)
	2. NO CONNECTION		2. NO CONNECTION		2. NO CONNECTION
	3. HEATER		3. HEATER		3. ANODE 2 (YELLOW)
	4. HEATER		4. HEATER		4. ANODE 3 (BLUE)
	5. ANODE 1		5. NO CONNECTION		5. ANODE 4 (PURPLE)
	6. NO CONNECTION		6. GRID 2		6. NO CONNECTION
	7. CATHODE		7. CATHODE		7. COLLECTOR (RED)

DIMENSIONAL DRAWING & ELECTRICAL CONNECTIONS

FW - 208

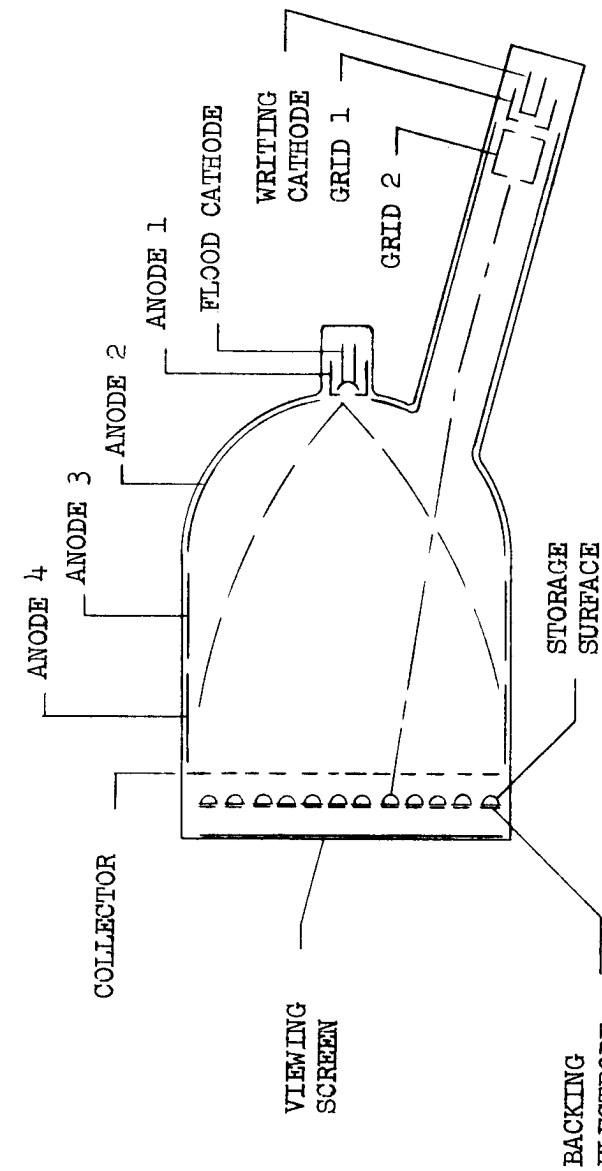

FUNCTIONAL SCHEMATIC

FW - 208

TENTATIVE

DESCRIPTION:

THE FW-211 IS A 2-1/2 INCH IATRON (DIRECT VIEW STORAGE CATHODE-RAY TUBE) THAT PRODUCES A BRIGHT VISUAL DISPLAY OF ELECTRICALLY STORED INFORMATION. IT IS ELECTROSTATICALLY FOCUSED AND DEFLECTED. THE TUBE DISPLAYS BRIGHT IMAGES ON A DARK BACKGROUND THAT CAN BE VIEWED IN DIRECT DAYLIGHT, AND FEATURES THE ABILITY TO WRITE, STORE, AND ERASE INFORMATION AT WILL. GREY SHADES ARE PRODUCED IN ACCORDANCE WITH AMPLITUDE VARIATIONS OF THE INPUT SIGNAL. THE TUBE HAS TWO CONCENTRIC ELECTRON GUNS, A WRITING GUN, WHICH WRITES THE INPUT SIGNAL ON A STORAGE MESH, AND A FLOOD GUN, WHICH ILLUMINATES THE PHOSPHOR IN ACCORDANCE WITH THE STORED SIGNAL. THE CONCENTRIC ARRANGEMENT OF THE GUNS REDUCES DISTORTION OF THE WRITING BEAM TO A MINIMUM.

GENERAL:

DIMENSIONS	SEE OUTLINE AND OPERATIONAL SCHEMATIC ATTACHED	
NOMINAL TUBE DIAMETER	2-1/2	INCHES
MINIMUM USEFUL DISPLAY DIAMETER	1.8	INCHES
PHOSPHOR	P-20	ALUMINIZED
OPERATING POSITION		ANY
CATHODE PRE-HEAT TIME	60	SECONDS
FOCUS		ELECTROSTATIC
DEFLECTION		ELECTROSTATIC

TYPICAL OPERATING VALUES:

		FLOOD SECTION		
VIEWING SCREEN		8.5	VDC	600 UA MAXIMUM
BACKING ELECTRODE		∱10	VDC	AND ERASE PULSES
COLLECTOR		∱135	VDC	
ANODE #4		∱65	VDC	
ANODE #3	∱5 TO	25	VDC	ADJUST FOR BEST COLLIMATION
ANODE #2	∱5 TO	25	VDC	ADJUST FOR BEST COLLIMATION
ANODE #1		∱12	VDC	
FLOOD CATHODE		0	VDC	
HEATER		6.3	V AC OR DC	1.4 A

* TRADEMARK OF THE INTERNATIONAL TELEPHONE & TELEGRAPH CORPORATION

		WRITING SECTION	
HEATER	6.3	V	AC OR DC .6 A
CATHODE	-900	VDC	
GRID #1 CUTOFF (NOTE 1)	-50	VDC	RESPECT WRITE CATHODE
GRID #2	0	VDC	
GRID #3 (FOCUS)	∱200		RESPECT WRITE CATHODE
MEAN DEFLECTION PLATE VOLTAGE	0	VDC	

TYPICAL PERFORMANCE CHARACTERISTICS:

RESOLUTION (NOTE 2)		
200 FT. LAMBERTS	120	LINES/INCH
2000 FT. LAMBERTS	80	LINES/INCH
4000 FT. LAMBERTS	40	LINES/INCH
LIGHT OUTPUT	4000	FT. LAMBERTS
WRITING SPEED		
20 VOLTS DRIVE TO 1000 FT. LAMBERTS	20000	IN/SECOND
ZERO BIAS TO 2000 FT. LAMBERTS	50000	IN/SECOND
ERASE TIME (NOTE 3)	5	MILLISECONDS
VIEWING TIME (NOTE 4)	5	SECONDS

NOTES:

1. VISUAL CUTOFF OF STORED, FOCUSED, UNDEFLECTED SPOT.

2. RESOLUTION MEASURED AT TUBE CENTER BY THE SHRINKING RASTER METHOD.

3. ERASE TIME IS THE SHORTEST TIME THAT INFORMATION CAN BE REMOVED FROM THE TUBE AFTER BEING STORED AT FULL BRIGHTNESS.

4. VIEWING TIME IS THE TIME THAT A SIGNAL STORED AT FULL BRIGHTNESS ANYWHERE IN THE DISPLAY AREA CAN BE VIEWED WITH ERASE PULSES APPLIED TO COUNTERACT ION WRITING.

* TRADEMARK OF ITT

SPECIAL PRECAUTIONS:

OBSERVE MAXIMUM RATINGS TO AVOID POSSIBLE DAMAGE TO THE TUBE. IN PARTICULAR THE VIEWING SCREEN VOLTAGE SHOULD BE LIMITED SO AS TO NEVER EXCEED 10 KV.

THE FULL VOLTAGE SHOULD NOT BE APPLIED TO THE VIEWING SCREEN INSTANTANEOUSLY. AN ORDINARY RC FILTER AT THE OUTPUT OF THE POWER SUPPLY WILL PROVIDE ADEQUATE ASSURANCE THAT THE VOLTAGE BUILD UP WILL NOT BE TOO ABRUPT. THE VIEWING SCREEN POWER SUPPLY SHOULD HAVE A SERIES RESISTANCE OF AT LEAST 1 MEG OHM.

REPEATED BOMBARDMENT WITH A HIGH CURRENT FOCUSED BEAM ON A SMALL AREA OF THE STORAGE SURFACE CAN BURN A DARK IMAGE INTO THE DISPLAY WHICH MAY REMAIN FOR SEVERAL HOURS OR EVEN PERMANENTLY. THEREFORE, THE DEFLECTION VOLTAGES SHOULD BE APPLIED BEFORE OPERATING THE WRITING BEAM.

ADDITIONAL INFORMATION FOR SPECIFIC APPLICATIONS CAN BE OBTAINED FROM THE

ELECTRON TUBE APPLICATIONS SECTION
ITT COMPONENTS DIVISION
POST OFFICE BOX 412
CLIFTON, NEW JERSEY

* TRADEMARK OF ITT

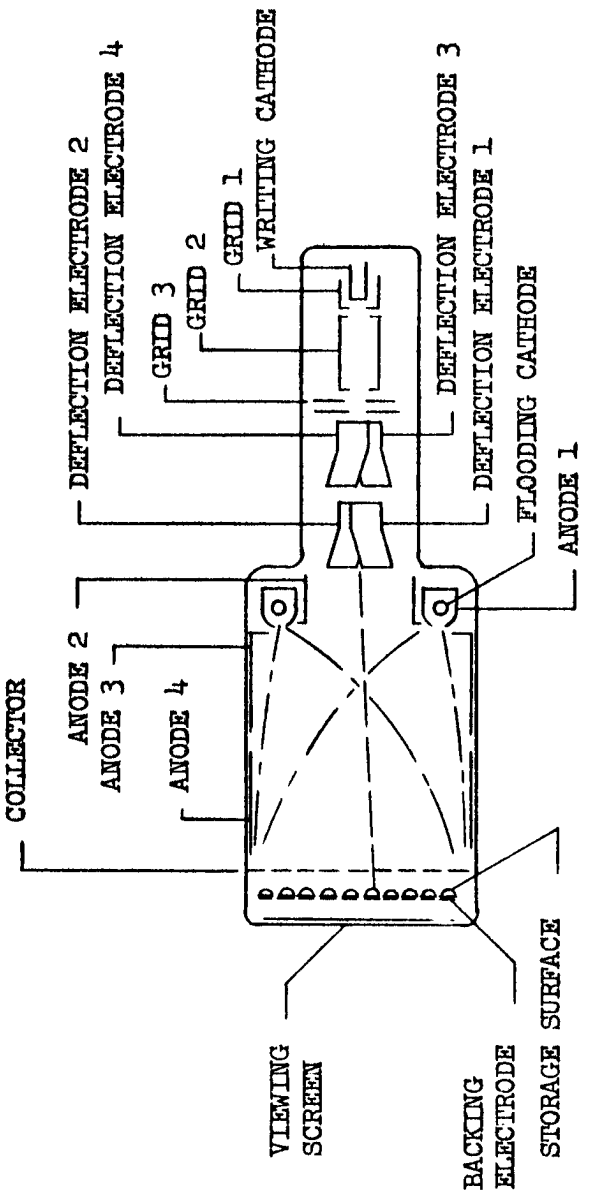

FIGURE 1 OPERATIONAL SCHEMATIC - FW-211

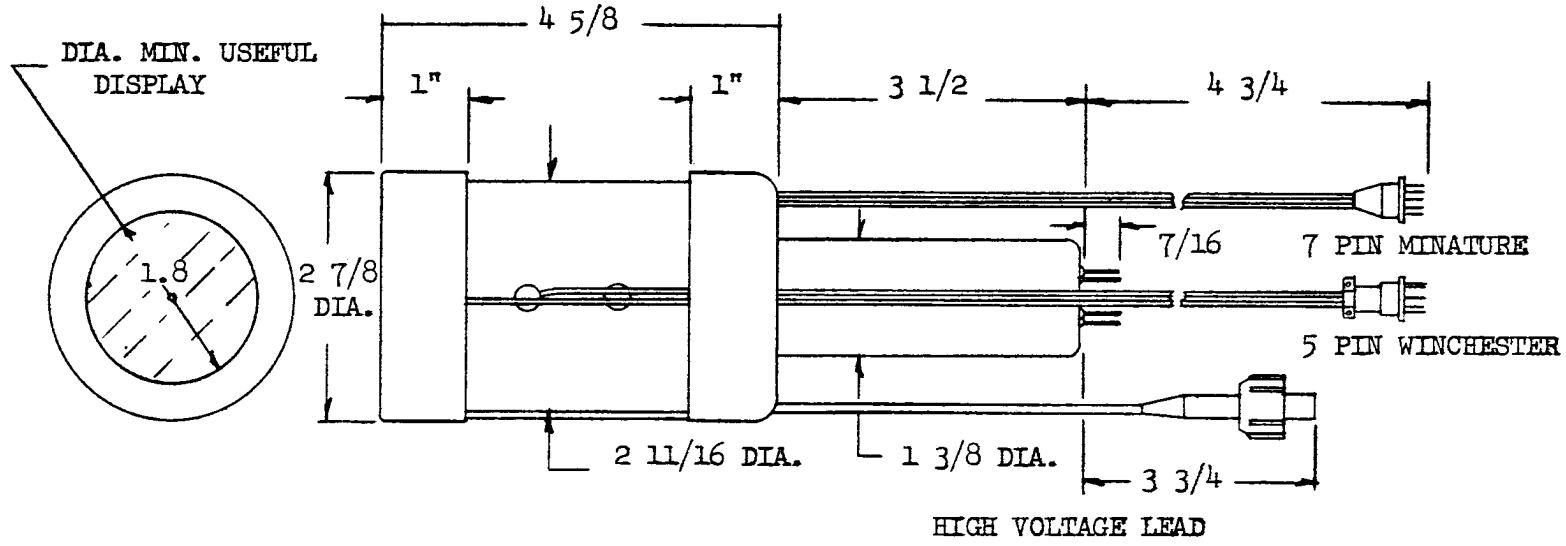

PIN	9 PIN BASE
1.	FLOOD GUN HEATER & ANODE 1
2.	FLOOD GUN HEATER
3.	GRID 2
4.	NO CONNECTION
5.	WRITING GUN HEATER & CATHODE
6.	WRITING GUN HEATER
7.	GRID 1
8.	GRID 3 (FOCUS)
9.	KEY PIN (CLIPPED)

PIN	7 PIN MINATURE
1.	FLOOD GUN CATHODE
2.	ANODE 2
3.	NO CONNECTION
4.	DEFLECTION ELECTRODE 1
5.	DEFLECTION ELECTRODE 2
6.	DEFLECTION ELECTRODE 3
7.	DEFLECTION ELECTRODE 4

PIN	5 PIN WINCHESTER
A.	NO CONNECTION
B.	ANODE 3
D.	COLLECTOR
E.	ANODE 4
H.	BACKING ELECTRODE

HIGH VOLTAGE MATES WITH AMPHENOL H.A. & H.V. TERMINAL ASSEMBLY NO. 832,608 or 834,333

FIGURE 2 DIMENSIONAL OUTLINE - FW-211

FW-211

(Preliminary Specifications)

2-1/2-INCH IATRON*

STORAGE CATHODE-RAY TUBE WITH

ELECTROSTATIC FOCUS AND ELECTROSTATIC DEFLECTION

The FW-211 Iatron is a storage cathode-ray tube that produces a bright visual display for direct viewing of electrically stored information. It incorporates a cathode-ray gun for electrical signal input, an insulator mesh for beam charge storage, a flooding gun for viewing and erasing, and an aluminized phosphor viewing screen for visual output. The large undeflected flooding beam continuously excites the 1-7/8-inch viewing screen through the insulator mesh and is modulated in cross-section by the stored signal charge pattern.

Special features of this tube are bright daylight viewing of electrical signals by image amplification and the ability to write, store, and erase such information at will. A display exceeding 4000 foot-lamberts brightness is obtained at a viewing screen voltage of only 8.5 kv.

The tube fits within standard case dimensions for a 2-3/4-inch dial instrument, drawing MS33549. The tube, itself, meets the environmental requirements of MIL-E-5400.

Used as a panel-mounted indicator in aircraft, its fast writing and high deflection speed permits accurate and instantaneous presentation of electrical information. Since coaxial electron guns are used in the tube, there is no trapezoidal distortion of the scanning pattern, and the symmetrical envelope occupies minimum space.

Deflection circuits with adequate power to deflect the tube can be included in the space between the tube neck and indicator case, and connections to the deflecting electrodes are conveniently located in the shoulder stem.

* "IATRON" is a trademark of ITTL, a division of ITT.

DATA

GENERAL

	Writing Section	Flooding Section	
Heater			
Voltage (ac or dc)	6.3	6.3	volts
Current	0.6	1.2	amperes
Direct interelectrode capacitances (approx. without external shield)			
Grid #1 to all other electrodes	4.2		μμf
Cathode to all other electrodes	0.5		μμf
Deflecting electrode D1 to D2 front	3.7		μμf
Deflecting electrode D3 and D4 rear	3.3		μμf
D1 to all other electrodes	4.75		μμf
D2 to all other electrodes	4.0		μμf
D3 to all other electrodes	5.0		μμf
D4 to all other electrodes	4.5		μμf
Focusing method	electro-static		
Deflection method	electro-static		
Deflection sensitivity			
D_1 D_2	78-90		volts/inch/kv
D_3 D_4	74-86		volts/inch/kv
Phosphor	high-visual-efficiency type (aluminized)		
Fluorescence	yellow-green		
Minimum useful screen diameter	1.85		inches
Weight	14		ounces
Dimensions	Figure 1		
Basing	Figure 1		

MAXIMUM RATINGS

	Writing Section	Flooding Section	
Screen voltage		10	kilovolts
Backing electrode voltage (peak)		25	volts
Collector voltage		200	volts
Anode #4 voltage		100	volts
Anode #3 (collimating electrode) voltage		50	volts
Anode #2 (collimating electrode) voltage		50	volts
Anode #1 voltage		20	volts
Grid #3 (focusing electrode) voltage	300*		volts
Grid #2 voltage	50		volts
Grid #1 voltage	0*		volt
Cathode voltage	-1200	0 reference	volts
Peak voltage between grid #2 and any deflecting electrode	200		volts
Peak heater-cathode voltage			volts
Heater negative with respect to cathode	125	125	volts
Heater positive with respect to cathode	10	10	volts

OPERATING VALUES AND TYPICAL PERFORMANCE CHARACTERISTICS

	Writing Section	Flooding Section	
Screen voltage		8500	volts
Screen current (maximum)		.250	ma
Backing electrode			
Voltage (dc)		10	volts
Voltage (pulse)		10	volts
Collector voltage		125	volts
Anode #4 voltage		65	volts
Anode #3 voltage (adjust for collimation)		12	volts
Anode #2 voltage (adjust for collimation)		15	volts
Anode #1 voltage		12	volts
Grid #3 (adjust for focus) voltage	175 to 225*		volts
Grid #2 voltage	0		volts

* All voltages are with reference to the flooding gun cathode except those marked by an asterisk indicating reference to the writing gun cathode potential.

	Writing Section	Flooding Section	
Grid # 1 voltage	-100		volts
Deflecting electrodes			
Voltage (peak to peak) D1 - D2	75		volts
D3 - D4	72		volts
Voltage (average)	0		volt
Current[1]	100 (max)		μa
Cathode voltage	-900	0 reference	volts
Cathode current	1.5	16	ma

RANGE OF OPERATING ADJUSTMENTS

	Writing Section	Flooding Section	
Backing-electrode erasing voltage pulses[2]			
Voltages		3 - 10	volts
Frequency		5000 - 50	pps
Anode #3 voltage[3]		10 - 20	volts
Anode #2 voltage[3]		5 - 15	volts
Anode #1 voltage[3]		10 - 20	volts
Grid #3 voltage	15 to 30 percent of cathode voltage		
Grid #1 bias voltage	5 to 18 percent of cathode voltage		

1 Deflecting electrodes intercept flooding beam current reflected at the storage surface. The deflection circuits should therefore have low output resistance.

2 The specified range of pulse frequencies adjusts the viewing time from about 1 to 40 seconds using 0.5 microsecond pulses. The pulse amplitude adjusts the potential level to which the storage surface is erased.

3 Anode voltage adjustments are necessary to adjust collimation and spot size of the flooding beam.

PERFORMANCE CHARACTERISTICS

Insulator characteristic length	3 to 4	volts
Display differential cutoff[4]	10	percent
Erase time, maximum	4	milliseconds
Storage time[5]	20	sec
Viewing time[6], min.	30	sec
Viewing time extended[7], min.	120	sec
Writing speed[8], min.	20,000	in/sec
Resolution, 10 percent max brightness	100	raster lines/in
90 percent max brightness	35	raster lines/in

OPERATING PROCEDURES

Writing

The FW-211 writing gun produces a low-current high-density pencil electron beam which is electrostatically focused and electrostatically deflected. The writing spot is modulated and deflected in the usual manner for cathode-ray tubes and may even excite the viewing screen to a brightness of several foot-lamberts. This display is only incidental and its effect is negligible in contrast to the brightness of the true stored display.

Before striking the viewing screen the beam passes in sequence through the two fine-mesh metal screens: the collector and the backing electrode. These screens each intercept about one-half the current of the passing beam so that only about one-fourth of the initial current is finally transmitted to the viewing screen. An aluminized phosphor layer on the inside surface of the flat faceplate forms the viewing screen. The collector and backing electrode screens are stretched flat on thin mounting rings whose inside diameters are slightly larger than the useful diameter of the viewing screen; these three electrodes constitute a close-spaced assembly.

---

4 The saturated brightness display is erased with a train of high duty cycles (50 msec per sec.) erase pulses of amplitude just sufficient to cause some area of the display to reach cutoff. This amplitude is termed L. The erase pulse amplitude is increased until all of the display is cutoff. This amplitude is greater than by an amount D. The variation is specified by D/L x 100 percent.

5 The time required for the brightness to increase from cutoff to 50 percent of its saturation value. No erase pulses are applied during this time.

6 Under the test conditions with erase pulses applied to counteract ion charging of the storage surface, this is the time required for a signal written to saturation brightness anywhere in the display to decay to cutoff.

7 In this mode of operation the flood beam is turned on at a low duty cycle, but high frequency and the erase pulse amplitude and duty cycle are adjusted to just counterbalance the charging by positive ions. The saturation brightness level decreases from 4000 foot-lamberts to 400 foot-lamberts at 10 percent duty cycle.

8 Writing speed to 50 percent of saturation brightness with 40 volt video drive.

The backing electrode, adjacent to the viewing screen, derives its name from its primary purpose in the tube which is to support the charge-storage surface. The storage surface consists of a thin layer of insulator material coated on the mesh of the backing electrode on the side facing away from the viewing screen.

The portion of the writing beam which is intercepted by the storage surface causes secondary electron emission, and the collector by virtue of its proximity to the storage surface assures uniform collection of the secondary electrons. This secondary current is greater than the intercepted primary current and a net positive charge is, therefore, stored on every impacted area of the storage surface. Since the surface is a very good insulator, leak-off of the charge is negligible.

Wherever charges are stored during writing, the potential of the storage surface is shifted in the positive direction according to the relationship $dv = dq/C$. The voltage shift, dv, of the capacity, C, of the elemental area encompassed on the storage surface by the writing spot is proportional to the stored writing charge, dq. In this way a potential distribution corresponding to the beam-modulating voltage and positive with respect to the unscanned areas is established over the storage surface scanned by the writing beam.

The storage surface is essentially the control grid of a second gun called the flooding gun. The purpose of the writing beam is to distribute modulating voltages in predetermined spatial sequence over the storage surface to control the flooding beam.

Flooding

As its name implies, the flooding gun floods simultaneously the entire storage surface area with a high-current electron beam. The beam is stationary (not deflected). As the beam passes through the meshes of the storage surface, the individual rays of the beam defined by the meshes are modulated by the potentials stored on the surface surrounding each mesh opening.

The absolute value of the most positive potential stored on the storage surface is negative with respect to the flooding gun cathode. Consequently, flooding current cannot strike the surface but can penetrate the openings in the meshes if the potential level there is as high or higher than the cut-off voltage. The cathode is normally operated at zero voltage and the backing electrode at +10 volts. The combined effect of the backing electrode and the storage-surface voltages is to establish a potential level greater than zero in the mesh openings when the storage surface voltage is more positive then -4 volts. Within the control range current penetrates the mesh openings in proportion to the storage surface potential, continues on to strike the viewing screen, and

produces a visible output. As noted above, flooding beam cutoff occurs at a storage-surface voltage of -4 volts, and as will be explained zero voltage corresponds to maximum brightness output.

The storage surface potential can increase in the positive direction during writing until a peak value, positive with respect to the flooding-gun cathode, may be reached after prolonged writing. However, it cannot be stored at that level but is automatically and continuously erased by the flooding beam to cathode potential after writing has ceased. The most positive instantaneous potential of the storage surface never attains the amplitude required for runaway charging.

Erasing

Although flooding current does not strike the storage surface, positive ions resulting from collision of the electrons with residual gas molecules land uniformly on the storage surface causing it to charge slowly in the positive direction. This is frequently termed ion writing. In less than 1 minute, ions can write to the zero-volt level corresponding to maximum tube-output brightness.

Further increase of potential is checked by the landing of flooding beam electrons on the storage surface. Unlike the high-energy writing beam, the flooding beam has insufficient energy to cause appreciable secondary emission; therefore, its effect in landing is to charge the storage surface in the negative direction to cathode potential, zero voltage.

The process of using the flooding beam to charge the storage surface in the negative direction is termed erasing. In order to erase, the storage surface potential must first exceed zero volts and this condition is met by momentarily increasing the voltage of the backing electrode. A change in the backing electrode induces a like change on the storage surface. The electrical circuit is completed by the beam in the tube when the storage surface voltage rises above zero volts and erasing begins.

The normal operating voltage of the backing electrode is +10 volts and the storage surface potentials are assumed distributed in the control range from 0 to -4 volts. If the backing electrode is suddenly raised to +14 volts, the storage surface potentials likewise are raised 4 volts to the range 0 to +4 volts. Flooding electrons will land on the storage surface charging it to zero volts. Next, restoring the backing electrode to +10 volts reduces the storage surface to -4 volts and flooding beam cutoff.

The charging time required to erase from 0 to -4 volts is 3 milliseconds. Therefore, the FW-211 can be erased to cutoff by a 4-volt 3-millisecond erasing voltage pulse capacitively coupled to the backing electrode or by a train or narrower pulses as obtained from an electronic pulse generator.

Viewing Time

The FW-211 writes bright traces on a dark background. The dark background is established and maintained by erasing with a continuous train of voltage pulses applied to the backing electrode. To maintain a dark background it is necessary to prevent ion writing which, as already stated, can cause the viewing screen brightness to increase to maximum in a period of less than 1 minute. Assuming an ion-writing time of 40 seconds, this rate of increase referred to the storage surface is about 4/ 40 = 0.1 volt/second. If the rate of erasing, which causes the brightness to decrease, is greater than the rate of ion writing, then the net change will be in the direction of decreasing brightness. Thus the effect of ion writing is overcome and an increase in background brightness is prevented. Since the maximum rate of erasing is about 4/0.003 = 1000 volts/second (at least 10,000 times higher than the average rate required to overcome ion writing) this objective can be readily achieved.

The average rate of erasing is adjustable by pulse width, frequency, or both and provides the means of controlling viewing time. Viewing time is the time required to erase from maximum brightness (0-volt storage surface potential) to cutoff (-4 volts storage surface potential). With the rate of erasing adjusted to just greater than 0.1 volt/second, the time to erase to cutoff is maximum and is the condition for maximum viewing time.

A blocking oscillator is often used to generate the erasing pulses for applications requiring long viewing time because the frequency can be varied easily and narrow pulses are readily obtained. The approximate frequency and pulse-width requirements can be calculated. However, it should be remembered that the calculations are based on average rather than instantaneous charging rates and the ion-charging rate depends upon the residual gas pressure in the tubes which is subject to variation from tube to tube. Nevertheless the calculated values are useful design values except in the region of maximum viewing time where results depend predominantly upon ion currents.

As an example, the following calculation is inserted for determining the erasing pulse frequency required to achieve a viewing time of 15 seconds using a blocking oscillator which generates pulses 0.5 microsecond wide.

The duty cycle of the erasing pulses will be $f \cdot t$ seconds per second where f is the pulse frequency and t the pulse width. The rate of erasure is then $\frac{-4}{0.003} f \cdot t$ that is, the product of the maximum rate of erasure and the duty cycle. The effect of ion writing is cancelled by an erasure rate of 0.1 volt/second, the assumed ion-writing rate. Neglecting temporarily the effect of ion writing, the rate of erasure to erase the storage surface in 15 seconds is 4/15 or 0.27 volt/second. Therefore, equating $\frac{4}{0.003} f \cdot t$ to the

sum of these two erasure rates (0.1 + 0.27) volts/sec, $\frac{4}{0.003} f \cdot t = 0.37$; therefore if $t = 0.5 \times 10^{-6}$ sec, f = 550 pulses/sec.

Black Level

It will be obvious from the discussion of erasing that the potential level to which the storage surface will be erased depends upon the amplitude of the erasing pulses. If their amplitude is too low, the surface will not be erased to cutoff, and if too high, it may be erased to below cutoff. Either condition is usually not desirable. In the first case the background of the viewing screen will not be dark and in the second case writing speed will be reduced appreciably. Therefore, it is important to ascertain the correct erasing-pulse amplitude and to make circuit provisions to assure that it is correct for every pulse width and frequency contemplated.

The correct amplitude for erasing just to cutoff can be determined experimentally. With the writing beam biased off, allow the tube to ion write to equilibrium. Apply the erasing pulses after making certain that their amplitude is 3 volts or less. This amplitude is too low to erase the tube to cutoff and the viewing screen will be excited uniformly to low brightness by the flooding beam spot. However, to be certain that cutoff has not been reached it may be necessary to turn off the erasing pulses momentarily. Since the pulses contribute bursts of current to the screen which produce a dim glow even though the average storage surface potential may be at cutoff, this precaution is advisable to avoid erasing to below cutoff. Increase the amplitude and repeat the procedure until cutoff is just reached.

It will be found that the erasing pulse amplitude required is not the same for all values of erasing duty cycle and is higher at shorter duty cycles as used for long viewing time. An amplitude as high as 12 volts may be required when conditions are adjusted for maximum viewing time. Switching from this condition to the conditions for minimum viewing time without also reducing the pulse amplitude can cause the storage surface to be erased to a potential level three times greater than cutoff.

Composite Operation

Erasing-voltage pulses applied to the FW-211 maintain a dark background on the viewing screen. If the frequency of the pulses is greater than about 40 pps there will be no flicker. If now a raster of uniformly spaced lines is scanned with constant speed by the writing beam and modulation is applied to the control grid, a familiar cathode-ray tube display will be produced. The brightness will be proportional to the writing-beam intensity and the writing areas will decay in brightness to cutoff at a rate depending upon the viewing-time conditions used.

The maximum rate of charging of the storage surface by the writing beam is at least 1000 times greater than the maximum erasing rate and the instantaneous charge written by the writing beam is independent of the flooding and erasing operations being performed simultaneously in the tube.

When the writing beam is scanned with constant speed to describe a raster of uniformly spaced lines, the writing-charge density stored on the storage surface will be proportional to the writing beam intensity. However, this may not be the case for many other types of scanning patterns or where the scanning speed is not constant. It is the writing charge per writing-spot area per scan period which determines the brightness of the written signals. Since the writing charge depends upon charging time as well as upon charging current, any departure from uniform charging time at any area of the storage surface during the scanning period destroys the proportionality between output brightness and writing beam intensity.

In many instances it is possible to use video equalization in the video amplifier to produce a stored writing charge density which is proportional to the video signal amplitude at the input to the amplifier. For example, video equalization can be used where the scanning path is radially outward about a common point (PPI radar display). In this scanning pattern, the average writing charge density is greatest at the start of the scan where the paths converge. The video equalization causes the output video amplitude to increase as a function of distance from the common center point of the pattern.

OPERATING PROCEDURE

Electrode Functions

There are three sections to the FW-211, named according to their functions. These are the writing, flooding, and imaging sections. The functions of the backing electrode and viewing screen comprising the imaging section have already been described, and in further discussions these are considered part of the flooding section.

The writing section contains only the writing gun which is of a type commonly used in cathode-ray tubes and is operated in the same way. Complete operating data is given under Operating Values and Typical Performance Characteristics sections.

A conductive coating on the inner wall of the bulb is divided into two separate bands whose essential purpose is to collimate the flooding beam. Uniform collimation is normally obtained by adjusting the voltages on anodes 2 and 3.

Flooding-Beam Focusing

The FW-211 must be operated in a shield to prevent deflection of the flooding beam by magnetic fields. Failure to provide adequate magnetic shielding can cause shading of brightness across the viewing screen diameter.

To collimate the flooding beam, apply typical operating voltages as specified under Operating Values and Typical Performance Characteristics, heeding the warning and precautions given later in this Operating Procedure. Bias the writing gun to cutoff and do not apply the backing-electrode erasing-voltage pulses. Allow the tube to ion write to full brightness, then adjust the voltage of anode No. 2 until the flooded area just fills the useful viewing diameter on the viewing screen. Next, adjust the anode No. 3 voltage until the brightness appears most uniform over the viewing screen. There is overlapping of control by the two anodes and it may be necessary to readjust the voltage of one after adjusting the other.

Do not permit the tube to remain in this maximum-brightness condition longer than necessary to make the above coarse adjustments since this may overheat the viewing screen and reduce its efficiency. Apply low-amplitude erasing pulses to the backing electrode and slowly increase their amplitude until the tube is just at cutoff (see section on black level). With scanning-pattern deflecting voltages applied, reduce the writing gun bias and focus the writing beam. Using an unmodulated beam, write to a brightness just above cutoff. Readjust slightly the voltages of anodes 2 and 3 until the pattern appesrs to be at equal brightness along any diameter.

Power Supply Requirements

The flooding-gun cathode carries the largest current of the beam-forming electrodes of the tube and for the least dissipation of power in voltage-dropping resistors in the power supply it is usually operated connected to ground.

The writing gun voltages are all negative with respect to the flooding gun cathode. They can be tapped from a bleeder across a 1200-volt power supply in the usual manner for cathode-ray tube guns.

The final deflecting electrodes, D1 and D2, can collect flooding current which has been reflected at the storage surface. The total current collected by either electrode when it swings positive during the deflection cycle will not exceed 100 microamperes. The circuit resistance of the final deflecting electrodes should be low enough to prevent

distortion of the scanning pattern by the loading of the electrodes with the intercepted flooding current.

Any voltage variations of the backing electrode are capacitively coupled to the storage surface which acts as the control grid for the flooding beam. Therefore, the same circuit precautions as regards ripple and shielding should be taken in operating the backing electrode as would be taken in operating any control grid. The backing electrode does not intercept current directly, but it does conduct all storage-surface charging currents and its resistance should, therefore, not exceed 10,000 ohms.

The regulation of the viewing-screen high voltage is not critical. Changes of screen voltage of less than approximately 10 percent do not cause a significant change in any of the electrode currents or tube characteristics. The circuit resistance should be at least 1 megohm and the voltage at no load should not exceed 10 kilovolts.

Special Precautions

Observe maximum ratings to avoid possible damage to the tube. In particular, the viewing-screen voltage should be limited so as never to exceed 10 kilovolts.

The full voltage should not be applied to the viewing screen instantaneously. An ordinary R-C filter at the output of the power supply provides adequate assurance that the voltage build-up will not be too abrupt. The minimum resistance of the high-voltage lead should be 1 megohm.

Repeated bombardment with a high-current focused writing beam on a small area of the storage surface can burn a dark image into the display which may remain for several hours or even permanently. Therefore, deflection voltages should be applied before operating the writing beam.

Attention is again called to the fact that the storage surface can be erased to far below cutoff by a high-amplitude voltage pulse applied to the backing electrode. A large transient voltage on that electrode can prevent normal writing for several minutes thereafter.

Deflecting electrodes D1 and D2 can act as mirror electrodes to reflect flooding current. Flooding current reflected at the storage surface, returning down the tube, can be reflected by the deflection electrodes at the instant when their potential passes through zero voltage. This re-reflected and concentrated current can then traverse the length of the tube for the third time causing a bright region to appear in the display and may even erase that area if its arrival coincides in time with an erasing pulse. Reflection

of current by the deflecting electrodes is in synchronism with the deflecting voltage applied to them so that brightening of the affected area of the display occurs at the same frequency. To avoid this disturbance the higher-frequency deflection voltage should be applied to the offending deflecting electrodes D1 and D2. This reduces the duration of the transient current pulse to the extent that its effects are negligible.

WARNING

The metal ring which encircles the faceplate of the FW-211 is at viewing-screen potential. Although encapsulated in plastic and adequately insulated from metal ground, to avoid possible shock be certain the high voltage is turned off before touching the tube.

Connectors

The 7-pin miniature cable connectors may be purchased from:

Cannon Electric Co.
3208 Humboldt Street
Los Angeles, California
MR-7-11 and MR-7-15

Alden Products Co.
Brockton, Mass.
207 MINC-7 pin

The high voltage cable No. 8101M mates with No. 8101F manufactured by: Alden Products Co., 146 N. Main Street, Brockton, Mass.

The Winchester connector (M5P-LSH19CS) is manufactured by: Winchester Electronics, Inc., Willard Rd., Norwalk, Conn.

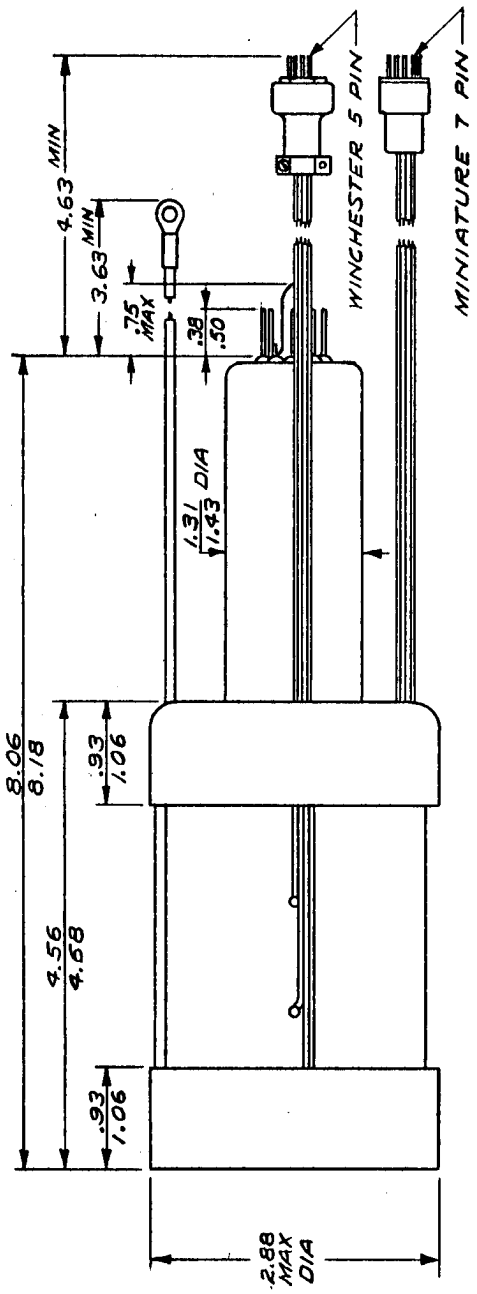

9 PIN BASE

PIN	
1	FLOOD GUN HEATER & ANODE #1
2	FLOOD GUN HEATER
3	GRID #2
4	NO CONNECTION
5	WRITING GUN HEATER & CATHODE
6	WRITING GUN HEATER
7	GRID #1
8	GRID #3
9	N.C. SHORT INDEX PIN

5 PIN WINCHESTER

PIN		
D	BACKING ELECTRODE	(GREEN)
E	COLLECTOR	(RED)
A	ANODE #3	(BLUE)
B	ANODE #4	(VIOLET)
H	NO CONNECTION	

7 PIN MINIATURE

PIN		
1	FLOOD GUN CATHODE	(YELLOW)
2	ANODE #2	(RED)
3	NO CONNECTION	
4	DEFLECTING ELECTRODE #1	(GREEN)
5	DEFLECTING ELECTRODE #2	(ORANGE)
6	DEFLECTING ELECTRODE #3	(VIOLET)
7	DEFLECTING ELECTRODE #4	(BLUE)

Figure 1 FW-211 Outline Dimensions and Basing

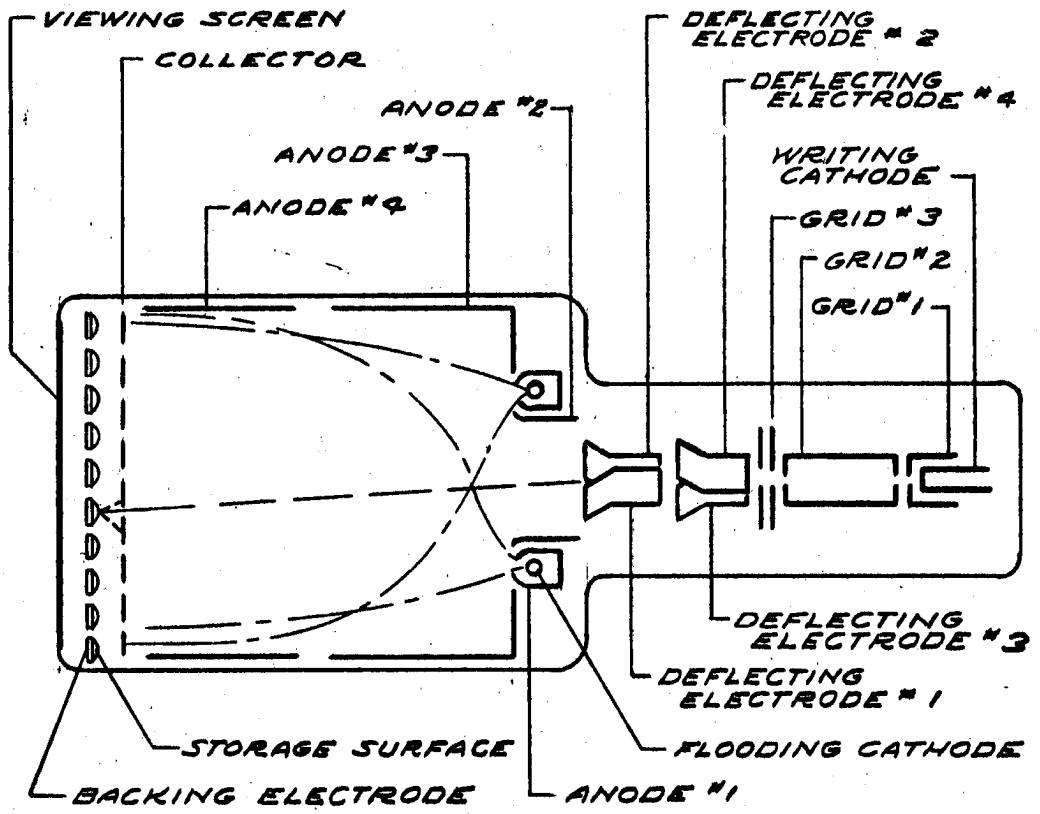

Figure 2 FW-211 Operational Schematic

TENTATIVE

DESCRIPTION:

THE FW-212 IS A 5-INCH IATRON (DIRECT VIEW STORAGE CATHODE-RAY TUBE) THAT PRODUCES A BRIGHT VISUAL DISPLAY OF ELECTRICALLY STORED INFORMATION. IT IS ELECTROSTATICALLY FOCUSED AND DEFLECTED. THE TUBE DISPLAYS BRIGHT IMAGES ON A DARK BACKGROUND THAT CAN BE VIEWED IN DIRECT DAYLIGHT, AND FEATURES THE ABILITY TO WRITE, STORE, AND ERASE INFORMATION AT WILL. GREY SHADES ARE PRODUCED IN ACCORDANCE WITH AMPLITUDE VARIATIONS OF THE INPUT SIGNAL. THE TUBE HAS TWO CONCENTRIC ELECTRON GUNS, A WRITING GUN, WHICH WRITES THE INPUT SIGNAL ON A STORAGE MESH, AND A FLOOD GUN, WHICH ILLUMINATES THE PHOSPHOR IN ACCORDANCE WITH THE STORED SIGNAL. THE CONCENTRIC ARRANGEMENT OF THE GUNS REDUCES DISTORTION OF THE WRITING BEAM TO A MINIMUM.

GENERAL:

DIMENSIONS	SEE OUTLINE AND FUNCTIONAL SCHEMATIC	
NOMINAL TUBE DIAMETER	5	INCHES
MINIMUM USEFUL DISPLAY DIAMETER	4	INCHES
PHOSPHOR	P-20	ALUMINIZED
OPERATING POSITION		ANY
CATHODE PRE-HEATING TIME	60	SECONDS
FOCUS		ELECTROSTATIC
DEFLECTION		ELECTROSTATIC

OPERATING VALUES:

			FLOOD SECTION	
VIEWING SCREEN	10	KV DC	600 MA MAX.	
BACKING ELECTRODE	∱10	VDC	AND ERASE PULSES	
COLLECTOR	∱150	VDC	1000 UA	
ANODE #5	∱100	VDC	25 UA	
ANODE #4	∱20	VDC	(0 TO 50 VOLTS ADJUSTABLE)	200 UA
ANODE #3	∱16	VDC	(0 TO 50 VOLTS ADJUSTABLE)	300 UA
ANODE #2	∱45	VDC	(0 TO 50 VOLTS ADJUSTABLE)	3000 UA
ANODE #1	∱12	VDC	(0 TO 20 VOLTS ADJUSTABLE)	25 MA
CATHODE	0	VDC		30 MA
HEATER	6.3	V	AC OR DC 2.1 A	

* TRADEMARK OF THE INTERNATIONAL TELEPHONE & TELEGRAPH CORPORATION

Writing Section

Cathode	-1500	VDC	2 MA
Grid #1 (Cutoff - Note 1)	-35	VDC	Respect write cathode
Grid #2	0	VDC	2 MA
Grid #3 (Focus)	∕300	VDC	Respect write cathode
Grid #4	0	VDC	
Heater	6.3	V	AC or DC .6 A
Deflection Sensitivity		Approximately 85 volts / inch	
Mean Deflection Plate Voltage	0 to ∕60	VDC	Adjust for least astigmatism

Typical Performance

Resolution (Note 2)		
200 ft. Lamberts	90	Lines/inch
1000 ft. Lamberts	60	Lines/inch
2500 ft. Lamberts	35	Lines/inch
Brightness	2500	Ft. Lamberts
Writing Speed		
20 Volts Drive, writing to 1,000 ft. Lamberts	35,000	Inches per Second
Zero bias, writing to 1,000 ft. Lamberts	70,000	Inches per Second
Erase Time (Note 3)	5	Milliseconds
Viewing Time (Note 4)	30	Seconds Maximum

NOTES:

1. Visual cutoff of stored, focused, undeflected spot.

2. Resolution measured at tube center by the shrinking raster method.

3. Erase time is the shortest time that information can be removed after being stored at 100% brightness.

4. Minimum time that a signal stored at full brightness anywhere in the display area can be viewed with erase pulses continuously applied to counteract ion writing.

* Trademark of ITT

SPECIAL PRECAUTIONS:

OBSERVE MAXIMUM RATINGS TO AVOID POSSIBLE DAMAGE TO THE TUBE. IN PARTICULAR THE VIEWING SCREEN VOLTAGE SHOULD BE LIMITED SO AS TO NEVER EXCEED 12 KV.

THE FULL VOLTAGE SHOULD NOT BE APPLIED TO THE VIEWING SCREEN INSTANEOUSLY. AN ORDINARY RC FILTER AT THE OUTPUT OF THE POWER SUPPLY WILL PROVIDE ADEQUATE ASSURANCE THAT THE VOLTAGE BUILD-UP WILL NOT BE TOO ABRUPT. THE VIEWING SCREEN POWER SUPPLY SHOULD HAVE A SERIES RESISTANCE OF AT LEAST 1 MEG OHM.

REPEATED BOMBARDMENT WITH A HIGH CURRENT FOCUSED BEAM ON A SMALL AREA OF THE STORAGE SURFACE CAN BURN A DARK IMAGE INTO THE DISPLAY WHICH MAY REMAIN FOR SEVERAL HOURS OR EVEN PERMANENTLY. THEREFORE, THE DEFLECTION VOLTAGES SHOULD BE APPLIED BEFORE OPERATING THE WRITING BEAM.

ADDITIONAL INFORMATION FOR SPECIFIC APPLICATIONS CAN BE OBTAINED FROM THE

ELECTRON TUBE APPLICATIONS SECTION
ITT COMPONENTS DIVISION
POST OFFICE BOX 412
CLIFTON, NEW JERSEY

* TRADEMARK OF THE INTERNATIONAL TELEPHONE & TELEGRAPH CORPORATION

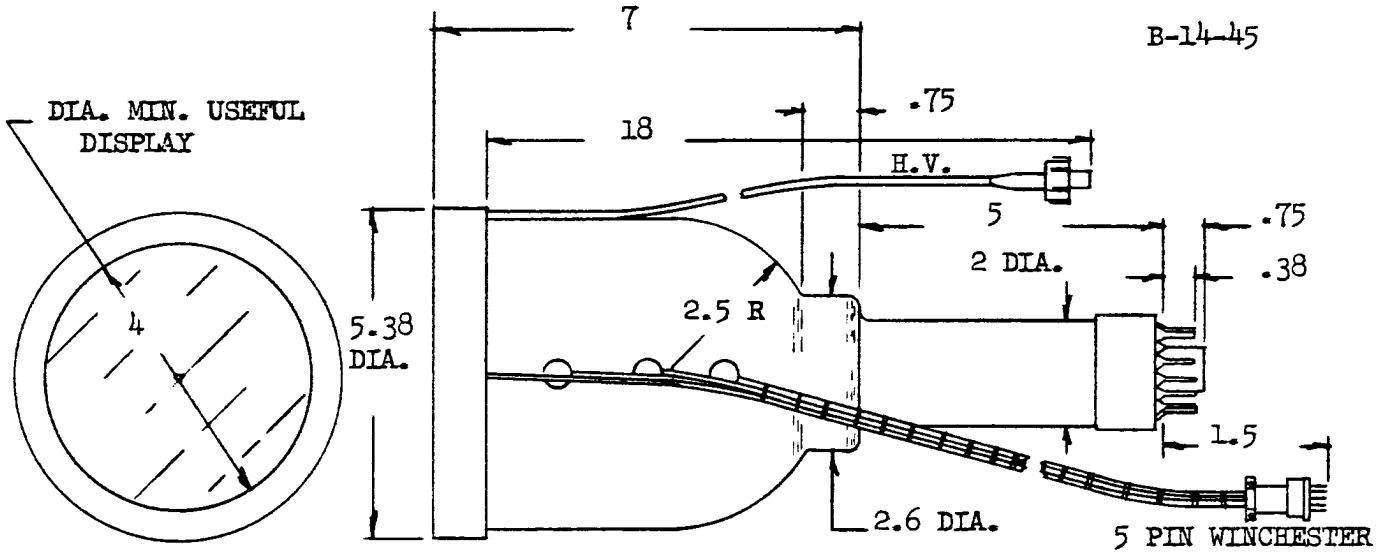

PIN	
1	WRITING GUN HEATER
2	GRID 3
3	DEFLECTION ELECTRODE 2
4	GRID 5
5	GRIDS 2, 4, & 6
6	ANODE 2
7	DEFLECTION ELECTRODE 3
8	FLOOD GUN CATHODE
9	FLOOD GUN HEATER
10	FLOOD GUN HEATER & ANODE 1
11	GRID 1
12	DEFLECTION ELECTRODE 4
13	DEFLECTION ELECTRODE 1
14	WRITING GUN HEATER & CATHODE

PIN	
A	ANODE 3
B	ANODE 4
D	COLLECTOR
E	ANODE 5
H	BACKING ELECTRODE

H.V. MATES WITH AMP.
H.A. & H.V. TERMINAL ASSEMBLY

FIGURE 2 DIMENSIONAL OUTLINE FW-212

TENTATIVE

DESCRIPTION:

THE FW-223 IS A 5 INCH IATRON (DIRECT VIEW STORAGE CATHODE-RAY TUBE) THAT PRODUCES A BRIGHT VISUAL DISPLAY OF ELECTRICALLY STORED INFORMATION.

IT IS MAGNETICALLY DEFLECTED AND ELECTROSTATICALLY FOCUSED. THE TUBE DISPLAYS BRIGHT IMAGES ON A DARK BACKGROUND THAT CAN BE VIEWED IN DIRECT DAYLIGHT, AND FEATURES THE ABILITY TO WRITE, STORE, AND ERASE AT WILL. GREY SHADES ARE PRODUCED IN ACCORDANCE WITH AMPLITUDE VARIATIONS OF THE INPUT SIGNAL. THE TUBE HAS TWO CONCENTRIC ELECTRON GUNS, A WRITING GUN, WHICH WRITES THE INPUT SIGNAL ON A STORAGE MESH, AND A FLOOD GUN, WHICH ILLUMINATES THE PHOSPHOR IN ACCORDANCE WITH THE STORED SIGNAL. THE CONCENTRIC ARRANGEMENT OF THE GUNS REDUCES DISTORTION OF THE WRITING GUN TO A MINIMUM.

GENERAL:

DIMENSIONS	SEE OUTLINE AND OPERATIONAL SCHMATIC ATTACHED
NOMINAL TUBE DIAMETER	5 INCHES
MINIMUM USEFUL DISPLAY DIAMETER	4 INCHES
PHOSPHOR	P-20 ALUMINIZED
OPERATING POSITION	ANY
CATHODE PRE-HEAT TIME	60 SECONDS
FOCUS	ELECTROSTATIC
DEFLECTION	MAGNETIC

TYPICAL OPERATING VOLTAGES:

	FLOOD SECTION		
VIEWING SCREEN	+10	KV	
BACKING ELECTRODE	+10	VDC	AND ERASE PULSES
COLLECTOR	+200	VDC	
ANODE #5	+145	VDC	
ANODE #4	+32	VDC	ADJUST FOR BEST COLLIMATION
ANODE #3	+12	VDC	ADJUST FOR BEST COLLIMATION
ANODE #2	+19	VDC	ADJUST FOR BEST COLLIMATION
ANODE #1	+16	VDC	ADJUST FOR BEST COLLIMATION
CATHODE	0	VOLTS	
HEATER	6.3	AC OR DC	2.1 A

* TRADEMARK OF INTERNATIONAL TELEPHONE & TELEGRAPH CORPORATION

		WRITE SECTION	
HEATER	6.3	V AC OR DC .6 A	
CATHODE	-1000	VDC	
GRID #1 (CUTOFF - NOTE 1)	-50	VDC	RESPECT WRITE CATHODE
GRID #2, #4 (INTERNAL CONNECTION)	0	VDC	
GRID #3 (FOCUS)	f200 TO f500		RESPECT WRITE CATHODE

TYPICAL PERFORMANCE:

RESOLUTION (NOTE 2)		
200 FT. LAMBERTS	120	LINES PER INCH
1500 FT. LAMBERTS	50	LINES PER INCH
LIGHT OUTPUT	2500	FT. LAMBERTS
WRITING SPEED TO 1500 FT. LAMBERTS	70000	INCHES PER SECOND
ERASE TIME (NOTE 3)	10	MILLISECONDS
VIEWING TIME (NOTE 4)	30	SECONDS MAXIMUM

NOTES:

1. VISUAL CUTOFF OF THE STORED, FOCUSED, UNDEFLECTED SPOT.

2. MEASURED BY THE SHRINKING RASTER METHOD AT THE CENTER OF THE TUBE.

3. ERASE TIME IS THE SHORTEST TIME THAT INFORMATION CAN BE REMOVED FROM THE TUBE AFTER BEING STORED AT FULL BRIGHTNESS.

4. VIEWING TIME IS THE TIME THAT A SIGNAL STORED AT FULL BRIGHTNESS ANYWHERE IN THE DISPLAY AREA CAN BE VIEWED WITH ERASE PULSES APPLIED TO COUNTERACT ION WRITING.

TRADEMARK OF ITT

SPECIAL PRECAUTIONS

OBSERVE MAXIMUM RATINGS TO AVOID POSSIBLE DAMAGE TO THE TUBE. IN PARTICULAR THE VIEWING SCREEN VOLTAGE SHOULD BE LIMITED, SO AS TO NEVER EXCEED 12 KV.

THE FULL VOLTAGE SHOULD NOT BE APPLIED TO THE VIEWING SCREEN INSTANTANEOUSLY. AN ORDINARY RC FILTER AT THE OUTPUT OF THE POWER SUPPLY WILL PROVIDE ADEQUATE ASSURANCE THAT THE VOLTAGE BUILD UP WILL NOT BE TOO ABRUPT. THE VIEWING SCREEN POWER SUPPLY SHOULD HAVE A SERIES RESISTANCE OF AT LEAST 1 MEG OHM.

REPEATED BOMBARDMENT WITH A HIGH CURRENT FOCUSED BEAM ON A SMALL AREA OF THE STORAGE SURFACE CAN BURN A DARK IMAGE INTO THE DISPLAY WHICH MAY REMAIN FOR SEVERAL HOURS OR EVEN PERMANENTLY. THEREFORE, THE DEFLECTION VOLTAGES SHOULD BE APPLIED BEFORE OPERATING THE WRITING BEAM.

ADDITIONAL INFORMATION FOR SPECIFIC APPLICATIONS CAN BE OBTAINED FROM THE

ELECTRON TUBE APPLICATIONS SECTION
ITT COMPONENTS DIVISION
POST OFFICE BOX 412
CLIFTON, NEW JERSEY

* TRADEMARK OF THE INTERNATIONAL TELEPHONE & TELEGRAPH CORPORATION

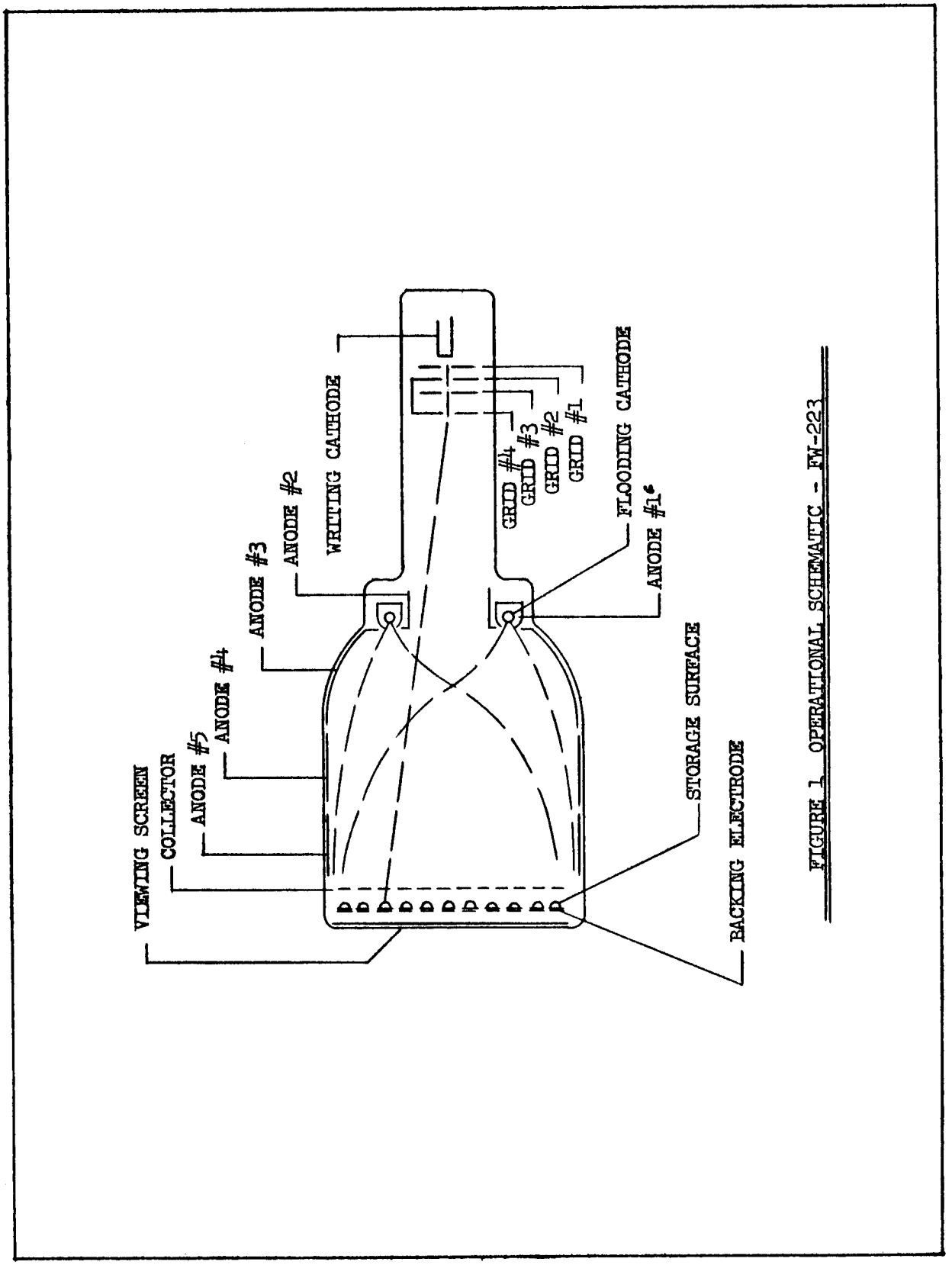

FIGURE 1 OPERATIONAL SCHEMATIC - FW-223

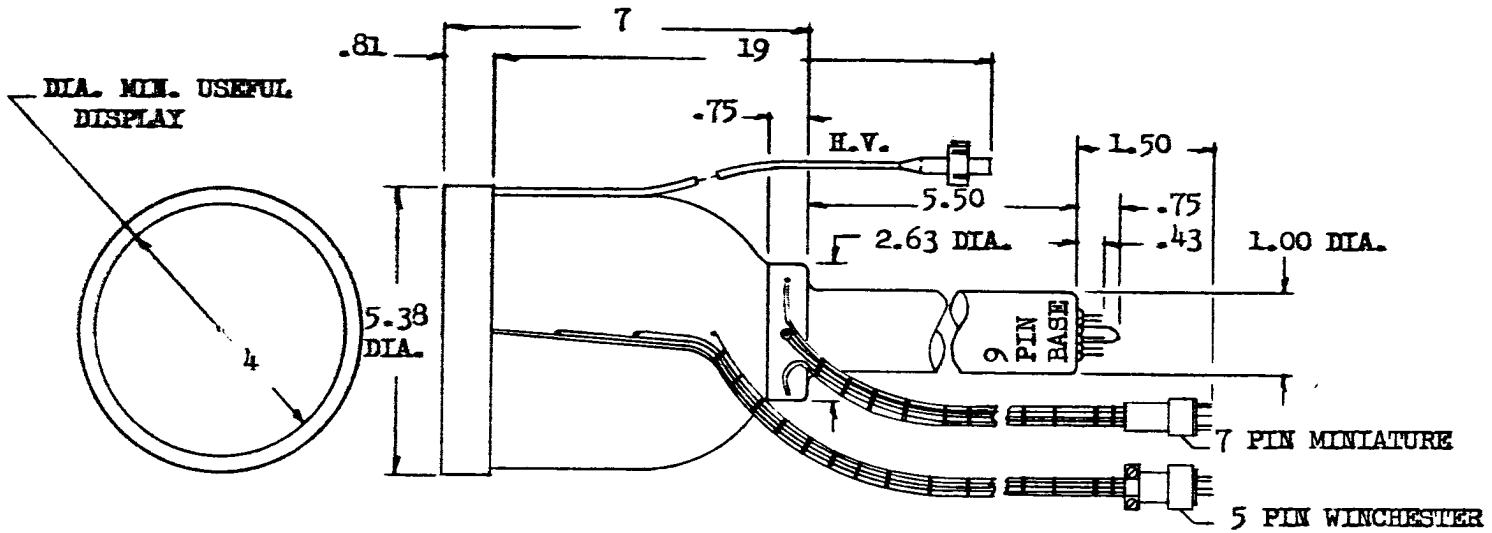

PIN	7 PIN MINIATURE
1.	NO CONNECTION
2.	NO CONNECTION
3.	FLOOD GUN HEATER & ANODE #1 (GREEN)
4.	FLOOD GUN HEATER (WHITE)
5.	ANODE #2 (BLUE)
6.	NO CONNECTION
7.	FLOOD GUN CATHODE (YELLOW)

PIN	5 PIN WINCHESTER
A.	ANODE #3 (YELLOW)
B.	ANODE #4 (BLUE)
D.	COLLECTOR (RED)
E.	ANODE #5 (PURPLE)
H.	BACKING ELECTRODE (GREEN)

PIN	9 PIN BASE
1.	GRID #1
2.	HEATER
3.	HEATER
4.	NO CONNECTION
5.	CATHODE
6.	GRID #2 & #4
7.	NO CONNECTION
8.	GRID #3 (FOCUS)
9.	NO CONNECTION

HIGH VOLTAGE MATES WITH AMPHENOL
H.A. and H.V. TERMINAL ASSEMBLY NO. 832,608 or 834,333

FIGURE 2 DIMENSIONAL OUTLINE - FW-223

TENTATIVE

DESCRIPTION:

THE FW-227 IS A 4 INCH IATRON (DIRECT VIEW STORAGE CATHODE-RAY TUBE) THAT PRODUCES A BRIGHT VISUAL DISPLAY OF ELECTRICALLY STORED INFORMATION.

THE TUBE INCORPORATES TWO WRITING GUNS, WHICH ARE ELECTROSTATICALLY FOCUSED AND DEFLECTED. THE TUBE DISPLAYS BRIGHT IMAGES ESPECIALLY SUITABLE FOR PHOTOGRAPHIC PURPOSES BECAUSE OF THE BLUE P-11 PHOSPHOR. THE ABILITY TO WRITE, STORE, AND ERASE INFORMATION AT WILL ARE FEATURES OF THE TUBE. GREY SHADES ARE PRODUCED IN ACCORDANCE WITH AMPLITUDE VARIATIONS OF THE INPUT SIGNALS. THE TUBE HAS THREE ELECTRON GUNS, TWO IDENTICAL WRITING GUNS, WHICH WRITE INPUT SIGNALS ON AN INSULATOR STORAGE MESH, AND A FLOOD GUN WHICH ILLUMINATES THE PHOSPHOR IN ACCORDANCE WITH THE STORED SIGNAL.

GENERAL:

DIMENSIONS	SEE OUTLINE ATTACHED
NOMINAL TUBE DIAMETER	4 INCHES
MINIMUM USEFUL DISPLAY DIAMETER	3 INCHES
PHOSPHOR	P-11 ALUMINIZED
OPERATION POSITION	ANY
WEIGHT	2.8 POUNDS
CATHODE PRE-HEATING TIME	30 SECONDS
FOCUS METHOD	ELECTROSTATIC
DEFLECTION METHOD	ELECTROSTATIC

MAXIMUM RATINGS:

	FLOOD SECTION
VIEWING SCREEN	10 KV
BACKING ELECTRODE	25 V
COLLECTOR	250 V
ANODE #4	150 V
ANODE #3	150 V
ANODE #2	150 V
ANODE #1	80 V

* TRADEMARK OF THE INTERNATIONAL TELEPHONE & TELEGRAPH CORPORATION

WRITE SECTION - EACH GUN

GRID #3	500	V	RESPECT WRITE CATHODE
GRID #2	150	V	RESPECT WRITE CATHODE
GRID #1	-150	V	RESPECT WRITE CATHODE
CATHODE	-1100	V	
PEAK VOLTAGE BETWEEN GRID #2 AND ANY DEFLECTING ELECTRODE OF CORRESPONDING GUN	±500	V	
HEATER-CATHODE VOLTAGE	±125	V	

TYPICAL OPERATING VALUES:

FLOOD SECTION

VIEWING SCREEN	4	KV	DC	1.2 MA MAXIMUM
BACKING ELECTRODE	+10	VDC		
COLLECTOR	+180	VDC		2.0 MA MAXIMUM
ANODE #4	+90	VDC		300 UA MAXIMUM
ANODE #3	+20	VDC		500 UA MAXIMUM
ANODE #2	+30	VDC		1.5 MA MAXIMUM
ANODE #1	+60	VDC		2.0 MA MAXIMUM
CATHODE	0	V		4.5 MA MAXIMUM
HEATERS	6.3	V	AC OR DC	1.4 A

WRITE SECTION - EACH GUN

HEATER	6.3	V	AC OR DC	.6 A
CATHODE	-1000	VDC		1 MA
GRID #1 (CUTOFF - NOTE 1)	-70	VDC		RESPECT WRITE CATHODE
GRID #2				INTERNALLY CONNECTED TO ANODE #2
GRID #3 (FOCUS)	+150			RESPECT WRITE CATHODE
DEFLECTION SENSITIVITY	60	VOLTS PER INCH, APPROXIMATELY		

RANGE OF OPERATING ADJUSTMENTS:

ANODE #2	+25 TO +50	VDC	ADJUST FOR BEST COLLIMATION
ANODE #3	+15 TO +40	VDC	ADJUST FOR BEST COLLIMATION
GRID #1 CUTOFF	-55 TO -110	VDC	RESPECT WRITE CATHODE, EACH GUN
GRID #3 FOCUS	+130 TO +330	VDC	RESPECT WRITE CATHODE, EACH GUN

* TRADEMARK OF ITT

TYPICAL PERFORMANCE:

RESOLUTION (NOTE 2)	
10% OF FULL BRIGHTNESS	100 LINES PER INCH
50% OF FULL BRIGHTNESS	50 LINES PER INCH
BRIGHTNESS	200 FT. LAMBERTS
WRITING SPEED (EACH GUN)	
28 VOLTS DRIVE WRITING TO 180 FT. LAMBERTS	11000 INCHES PER SECOND
ERASE TIME	5 MILLISECONDS
VIEWING TIME	NO VISIBLE DEGRADATION OF A SIGNAL STORED AT 90% BRIGHTNESS FOR AT LEAST 1 SECOND WITH NO ERASE APPLIED.

ENVIRONMENTAL DATA:

HIGH TEMPERATURE	MIL-E-5272A PROCEDURE I
LOW TEMPERATURE	MIL-E-5272A PROCEDURE II
TEMPERATURE-SHOCK	MIL-E-5272A PROCEDURE I, EXCEPT HIGH TEMPERATURE TO BE 160°F AND LOW TEMPERATURE TO BE -65°F
ALTITUDE	70000 FT.
VIBRATION	6G 10-150 CPS 2G 150-500 CPS
SHOCK (3 AXES)	
OPERATING	15G FOR 32 MS, 18 IMPACTS
NON-OPERATING (CRASH SAFETY)	30G FOR 11 MS, 18 IMPACTS

NOTES:

1. VISUAL CUTOFF OF THE STATIONARY WRITING BEAM IS TO BE DETERMINED IN A DARKENED ROOM. THE WRITING BEAM SHOULD BE FOCUSED AND THE BACKING ELECTRODE VOLTAGE REDUCED TO -20 VOLTS.

2. RESOLUTION MEASURED BY THE SHRINKING RASTER METHOD AT THE CENTER OF THE VIEWING SCREEN.

3. ERASE TIME IS THE SHORTEST TIME THAT INFORMATION CAN BE REMOVED AFTER BEING STORED AT 100% BRIGHTNESS.

* TRADEMARK OF ITT

SPECIAL PRECAUTIONS:

OBSERVE MAXIMUM RATINGS TO AVOID POSSIBLE DAMAGE TO THE TUBE. IN PARTICULAR THE VIEWING SCREEN VOLTAGE SHOULD BE LIMITED SO AS TO NEVER EXCEED 10 KV. THE FULL VOLTAGE SHOULD NOT BE APPLIED TO THE VIEWING SCREEN INSTANTANEOUSLY. AN ORDINARY RC FILTER AT THE OUTPUT OF THE POWER SUPPLY WILL PROVIDE ADEQUATE ASSURANCE THAT THE VOLTAGE BUILD UP WILL NOT BE TOO ABRUPT. THE VIEWING SCREEN POWER SUPPLY SHOULD HAVE A SERIES RESISTOR OF AT LEAST 1 MEG OHM.

REPEATED BOMBARDMENT WITH A HIGH CURRENT FOCUSED BEAM ON A SMALL AREA OF THE STORAGE SURFACE CAN BURN A DARK AREA INTO THE DISPLAY, WHICH MAY REMAIN FOR SEVERAL HOURS OR EVEN PERMANENTLY. THEREFORE, THE DEFLECTION VOLTAGES SHOULD BE APPLIED BEFORE OPERATING THE WRITING BEAM.

ADDITIONAL INFORMATION FOR SPECIFIC APPLICATIONS CAN BE OBTAINED FROM THE

ELECTRON TUBE APPLICATIONS SECTION
ITT COMPONENTS DIVISION
POST OFFICE BOX 412
CLIFTON, NEW JERSEY

* TRADEMARK OF THE INTERNATIONAL TELEPHONE & TELEGRAPH CORPORATION

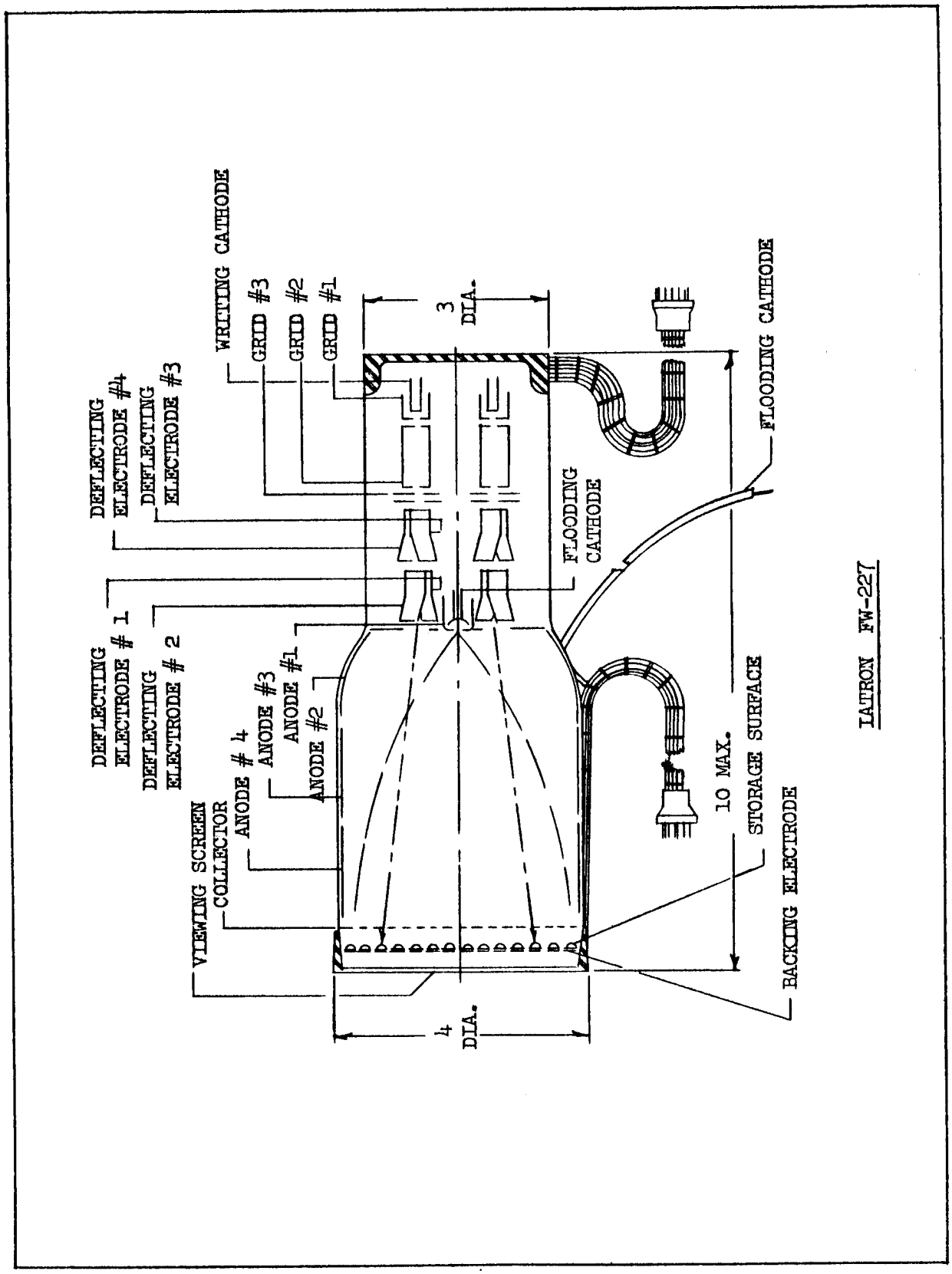

IATRON FW-227

ITT

APPLICATION NOTES

Storage Image Tubes Types FW-231 and FW-232

ELECTRONIC CAMERA TUBES FEATURING LOW LIGHT LEVEL INTEGRATION AND CONTRAST ENHANCEMENT FOR USE IN HIGH-SPEED PHOTOGRAPHY, PULSED LIGHT SYSTEMS, AND HIGH-SPEED SINGLE-EVENT STUDIES.

The Storage Image Tube is a new type of electron device combining the imaging properties of a conventional image tube with the storage properties of a storage tube. Images may be written, retained, and examined in detail. A simple erase pulse prepares the tube for the next exposure. Storage times ranging from a few seconds to several minutes are possible depending on the method of operation. The tube is essentially an electronic camera including in its many uses low light level integration, contrast enhancement, high-speed photography, pulsed light systems, and high-speed single-event studies.

The FW-231 and FW-232 are identical in all respects except for the viewing screen phosphor. The FW-231 has a P-11 phosphor and is recommended in applications where the stored image may be photographed. The FW-232 has a P-20 phosphor and is recommended in cases where only visual observation is involved.

COMPONENTS and INSTRUMENTATION Laboratory
Fort Wayne, Indiana

A DIVISION OF INTERNATIONAL TELEPHONE AND TELEGRAPH CORPORATION

STORAGE IMAGE TUBE CHARACTERISTICS

	MINIMUM	MEDIAN	MAXIMUM	
Electrical Characteristics:				
Cathode potential: During write (1)	−400	−600	−800	volts
Cathode potential: During read	0	0	0	volts
Cathode potential: During erase	0	0	0	volts
Collector electrode potential (2)	5	50	200	volts
Backing electrode potential:				
Bias (3)	5	10	20	volts
Erase pulse (4)	0	1.4	3	volts
Viewing screen potential (1) (5)	8	10	12	kilovolts
Axial magnetic focusing field (1)	400	500	600	gauss
General Characteristics:				
Photocathode: Spectral response (6)		S11		
Photocathode: Luminous sensitivity (7)	15	30		μa/lumen
Photocathode: Radiant sensitivity (8)	0.015	0.024		amp/watt
Photocathode: Current during read and erase (9)	—	0.1	1	μa
Photocathode: Useful diameter	—	0.5	—	inches
Viewing screen:				
Phosphor type (10)				
FW231		P11, aluminized		
FW232		P20, aluminized		
Luminous efficiency (11)				
FW231	—	0.08	—	lumen/μa
FW232	—	0.45	—	lumen/μa
Useful Diameter	—	1.5	—	inch
Resolution (12)	8	10	—	line pairs/mm
Image magnification (13)	0.9	1.0	1.1	—
Threshold sensitivity (14)	—	1	3	10^{-3} foot candle second
Viewing screen brightness level: (15)				
FW231:	—	0.04	0.4	millilambert
FW232:	—	0.2	2	millilambert
Viewing time: (16)				
Fixed bias	5	—	—	seconds
Adjustable bias	60	—	—	seconds
Levels usable (17)	3	5	—	—
Erasing time (4)	—	—	0.5	second

NOTES

Care must be taken to avoid over-charging of the storage surface, therefore the illumination- time product during write should be limited to approximately 20 times the threshold sensitivity level.

1. In the magnetically focused storage image tube, the conditions of focus must be met for both the input (i.e. storage) section and the output (i.e. image) section of the tube. This requires that either the focusing field or the accelerating voltages, or both, be adjustable. In practice, a fixed magnetic field has been employed and focus is achieved by adjusting the voltages. The voltages required for focusing should fall within the ranges indicated for an axial magnetic field strength of 500 gauss. The magnetic field strength may be changed within the range indicated and satisfactory operation attained, but the focus voltages mu be adjusted accordingly.
   The cathode pulse voltage during write is adjusted so that the photoelectron image in the input section is focused onto the storage surface. The viewing screen voltage is adjusted during read when the cathode potential is at zero. When the output section is in focus, a shadow image of the 500 mesh screen can be seen with a microscope.
2. Adjustment of the collector potential should be made prior to the write phase of the tube's operational cycle and should be made for optimum display uniformity. Within the range indicated this adjustment is not critical. In some tubes the viewing time may be increased at the higher collector potentials.
3. The backing electrode potential should be continuously variable within the range indicated. Prior to writing, this potential is increased to the point where uniform transmission occurs and the storage surface is allowed to charge to flood cathode potential. The backing electrode potential is then reduced to cutoff and the image written. After writing, this potential is again increased to some nominal point where the stored image may be observed. A slight shift from this nominal value at this point may be desirable to increase or decrease contrast. The optimum backing electrode potential varies slightly from tube to tube, but it falls within the range indicated.
   Since the voltage required for cutoff may tend to increase after extended erasures, it is desirable that the initial potential applied to the backing electrode be in the lower end of the indicated range.
4. To erase a written image (prepare the storage surface for the next exposure), a simple d-c pulse may be superimposed on the nominal backing electrode potential used during read. In instances where more than a 200-millivolt signal has been written into the storage surface, a 0.5-second pulse equal in magnitude to the cutoff potential (see Figure 5) is usually sufficient. In extreme cases where overcharging has occurred, a pulse duration of several seconds may be required.
5. The maximum viewing screen potential is specified to provide a suitable margin of safety relative to internal glow or flashover.
6. The photocathode is of the cesium-antimony type with the S11 spectral response characteristics shown in Figure 1.
7. With standard tungsten light source (2870 degrees K color temperature).
8. Calculated from the approximate relationship: peak radiant sensitivity in amperes per watt equals 5×10^{-4} times the luminous sensitivity in microamperes per lumen; this relationship being derived for a photocathode having a typical S-11 response peaking at 4400 Angstroms.
9. The cathode current during read (flood beam current) is the result of the illumination of the photocathode by a small lamp such as a GE No. 328 placed in front of the objective lens of the viewing system. This lamp may be supported by a spider attached to a lens shield and is located on axis at the position providing optimum uniformity of cathode illumination. The brightness of the flood lamp, and subsequently the amount of flood beam current and the brightness of the output image may be controlled by adjusting the flood lamp potential.

PHOTOCATHODE AND PHOSPHOR CHARACTERISTICS

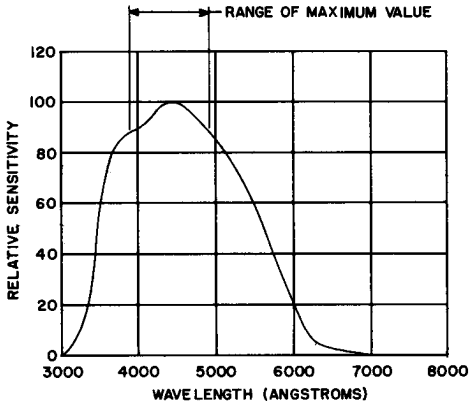

FIGURE 1
S11 SPECTRAL RESPONSE

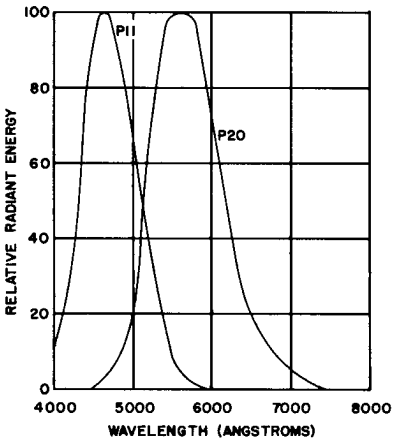

FIGURE 2
SPECTRAL EMISSION OF
P11 AND P20 PHOSPHORS

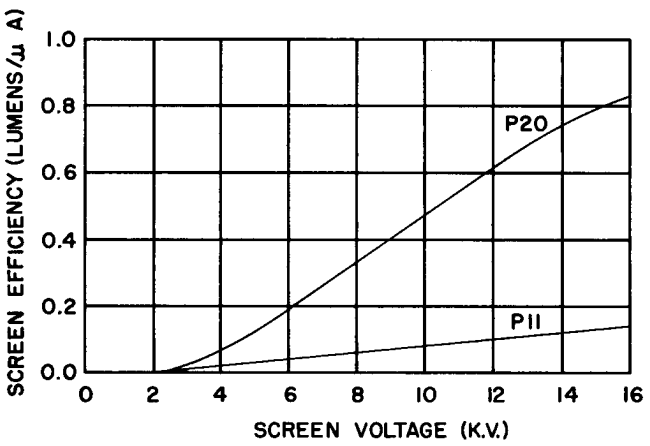

FIGURE 3
TYPICAL LUMINOUS EFFICIENCY OF
P11 AND P20

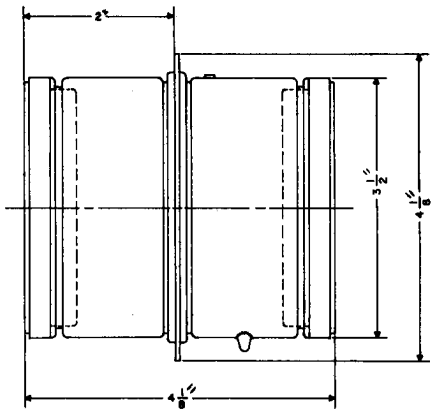

FIGURE 4
OUTLINE DRAWING

10. The FW-231 with the blue P-11 phosphor is recommended for applications where the receiver has a high blue sensitivity. It is recommended, therefore, in applications in which the stored image is to be photographed.
    The FW-232 is recommended for applications where only visual observation of the stored image is involved since the yellow-green output of the P-20 phosphor falls at the peak of the normal eye spectral response curve.
    For the spectral emission characteristics of both the P-11 and the P-20 phosphor, see Figure 2.
11. The luminous efficiency figures given are in terms of total lumens emitted by the phosphor per microampere of bombarding current at a phosphor screen potential of 10 kilovolts. For efficiency values at other voltages, refer to Figure 3.
12. The resolution of the storage image tube is defined as the maximum number of line pairs (one black plus one white, of equal width) per millimeter that can be projected onto the photocathode, stored, and read out in the stored image.
    . Image magnification and distortion are dependent upon the uniformity of the magnetic focusing field.
14. The threshold sensitivity is expressed in terms of the detectable illumination-time product in foot candle seconds, where the illumination (2870 degrees K source) is measured in the plane of the photocathode and the time involved is the time of the write or exposure phase of the tube's operational cycle. This illumination-time product is a constant over several orders of magnitude of exposure time. Care must be taken to avoid over-charging of the storage surface; therefore the illumination-time product during write should be limited to approximately 20 times the threshold sensitivity level.
15. Values given are saturated values with 1 microampere total cathode current and with the storage surface at equilibrium potential. For threshold images, values may be as low as 5 percent of the saturated values.
16. Because of volume leakage in the storage surface material, the front surface potential with its stored charge pattern drifts slowly. With a fixed backing electrode voltage, change in contrast and eventual erasure of the stored image occurs. This limits the viewing time. If, however, a slight compensating adjustment is made in the backing electrode voltage, contrast is enhanced and the erasure is minimized. Viewing time, therefore, can be significantly extended by occasional readjustment of the bias potential.
17. The number of output levels, each related to a different input, that can be distinguished from one another regardless of location on the storage surface.

    The brightness of the image presented on the viewing screen during read is dependent upon the magnitude of the flood current and the bias level of the backing electrode. The flood current can be controlled by the brightness of the flood lamp and the bias can be controlled by adjusting the backing electrode potential. A typical set of transconductance curves (Figure 5) shows the relationship between viewing screen brightness and storage surface potentials for various backing electrode potentials. Maximum viewing screen brightness occurs when the storage surface is at cathode or equilibrium potential; in practice, however, for good contrast and maximum viewing time, the brightness usually should be from 5 to 15 percent of this maximum value.

    The erase phase, during which the storage surface is erased by increasing the backing electrode potential sufficiently positive so that the flooding beam strikes all charged areas of the storage surface and discharges them to flood cathode potential. The backing electrode potential is then reduced to cutoff and the tube is ready for the next exposure.

In operation, the storage surface is first erased to equilibrium potential, and the backing electrode potential reduced to cutoff. Next, the charge image is written onto the storage surface. The brightness of the viewing screen image is then dependent upon the magnitude of the stored charge. For example, referring to Figure 5, if the flood current during erase had been adjusted to produce an equilibrium brightness of 100 microlamberts, if the backing electrode potential were 12 volts, and if the storage surface were charged to a potential of 0.2 volt by writing, the brightness of the viewing screen image should be 11 microlamberts. Minor adjustments in backing electrode potential at this point are permissible and sometimes desirable to enhance contrast, bring out background detail, or prolong viewing time.

STORAGE IMAGE TUBES
GENERAL DESCRIPTION AND OPERATION

GENERAL DESCRIPTION AND OPERATION

The Storage Image Tube is a new type of device which performs the function of an all-electronic, directly-viewed, integrating, photographic system. It is capable of reproducing and holding a visible image for long periods of time and then of being rapidly erased prior to further exposure.

Essential parts of this tube include a photocathode upon which the incoming image is focused, a storage surface which stores a charge image, and a viewing screen for viewing the output image. Magnetic focusing is used with unity image magnification in a uniform magnetic field. The focusing field usually is produced by a cylindrical permanent magnet, such as the FW 313.

This tube is capable of storing a range of levels (i.e., halftone images) without degradation during storage time or during continuous readout.

(1) The operation of the tube is divided into three separate phases:

The exposure or write phase, during which the photocathode is pulsed negatively by approximately 600 volts and the incoming optical image, focused on the photocathode, produces a photoelectron image which charges the storage surface by secondary emission. A positive charge image which corresponds to the optical image is thereby written onto the storage surface.

(2) The viewing or read phase, during which a continuous flood beam from the photocathode, at zero (reference) potential, is transmission modulated, without loss of charge, by the charge stored on the storage surface, and produces a visible image on the viewing screen.

During this phase the photocathode is flooded with light to produce a uniform flood beam of photoelectrons. The backing electrode potential is adjusted so that the electrons can be partially transmitted by the storage mush without striking the storage surface (typical control grid action). Variations in storage surface potential modulate the flood current trnsmitted by the storage mesh with the result that variations in viewing screen brightness are produced which correspond to intensity variations in the input image.

The brightness of the image presented on the viewing screen during read is dependent upon the magnitude of the flood current and the bias level of the backing electrode. The flood current can be controlled by the brightness of the flood lamp and the bias can be controlled by adjusting the backing electrode potential. A typical set of transconductance curves (Figure 5) shows the relationship between viewing screen brightness and storage surface potentials for various backing electrode potentials. Maximum viewing screen brightness occur when the storage surface is at cathode or equilibrium potentic in practice, however, for good contrast and maximum viewing time, the brightness usually should be from 5 to 15 percent of this maximum value.

(3) The erase phase, during which the storage surface is erased by increasing the backing electrode potential sufficiently positive so that the flooding beam strikes all charged areas of the storage surface and discharges them to flood cthode potential. The backing electrode potential is then reduced to cutoff and the tube is ready for the next exposure.

In operation, the storage surface is first erased to equilibrium potential, and the backing electrode potential reduced to cutoff. Next, the charge image is written onto the storage surface. The brightness of the viewing screen image is then dependent upon the magnitude of the stored charge. For example, referring to Figure 5, if the flood current during erase had been adjusted to produce an equilibrium brightness of 100 microlamberts, if the backing electrode potential were 12 volts, and if the storage surface were charged to a potential of 0.2 volt by writing, the brightness of the viewing screen image should be 11 microlamberts. Minor adjustments in backing electrode potential at this point are permissible and sometimes desirable to enhance contrast, bring out background detail, or prolong viewing time.

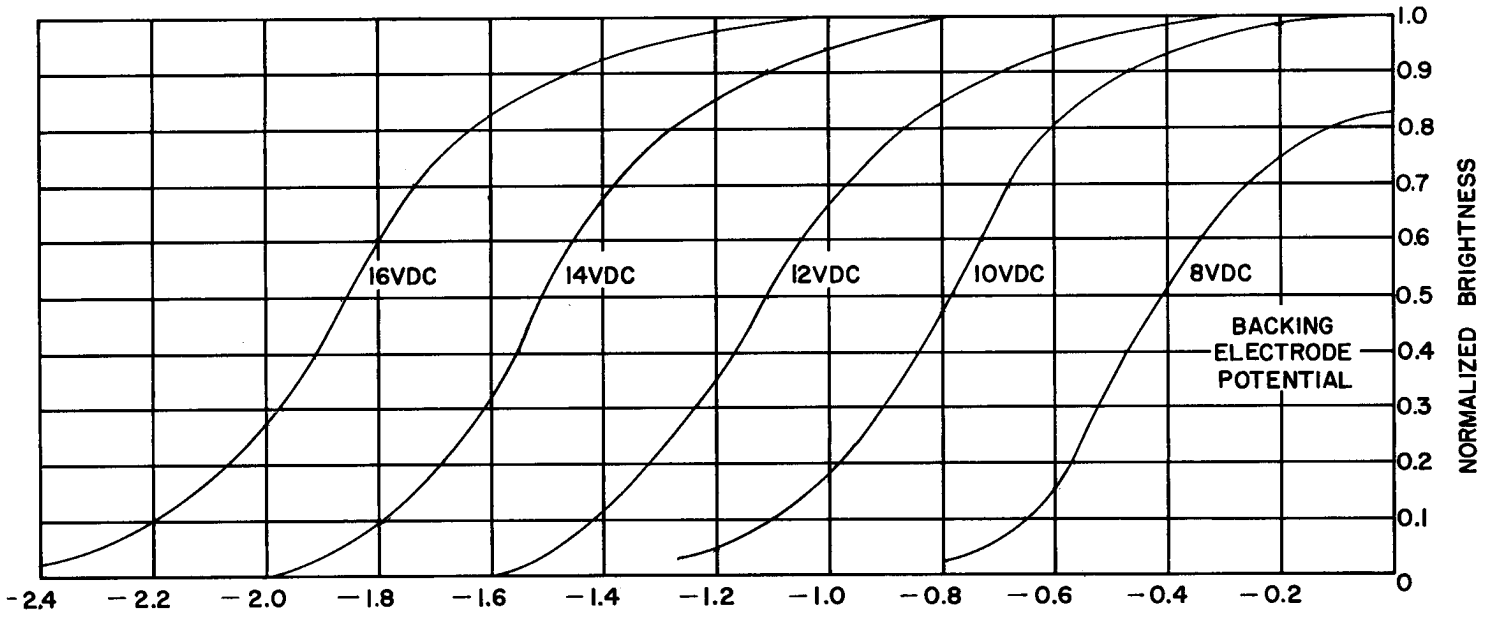

Address inquiries to: Director, Components and Instrumentation Laboratory, ITT

3700 E. Pontiac Street, Fort Wayne, Indiana **Telephone Eastbrook 7571**

ELECTRON TUBE DEPARTMENT ■ COMPONENTS DIVISION
INTERNATIONAL TELEPHONE AND TELEGRAPH CORPORATION, CLIFTON, NEW JERSEY

KUTHE KU-25 HYDROGEN THYRATRON

DESCRIPTION:

THE KU-25 IS A UNIPOTENTIAL CATHODE, 3 ELEMENT HYDROGEN FILLED THYRATRON DESIGNED FOR NETWORK DISCHARGE SERVICE. IN SUCH SERVICE, IT IS SUITABLE FOR PRODUCING PULSE OUTPUTS OF MORE THAN 1.5 MEGAWATTS AT AN AVERAGE POWER LEVEL OF MORE THAN 1.2 KW.

THE KU-25 IS EQUIPPED WITH RESERVOIR FOR LONG STABLE LIFE AND IS ESPECIALLY ADAPTED TO OPERATION AT HIGH PULSE REPETITION RATES.

ELECTRICAL DATA, GENERAL:

	Nom.	Min.	Max.	
Heater Voltage	6.3	5.9	6.7	Volts a.c.
Heater Current (At 6.3 Volts)		9.6	11.6	Amperes
Minimum Heating Time			5	Minutes

MECHANICAL DATA, GENERAL:

Mounting Position	Any
Base	Super Jumbo 4-Pin with Bayonet A4-18 with Ceramic Insert
Anode Cap	C1-43, Medium, with Corona Shield
Cooling (Note 1)	
Net Weight	12 Ounces
Dimensions	See Outline

RATINGS:

Max. Peak Anode Voltage, Forward	12.0	Kilovolts
Max. Peak Anode Voltage, Inverse (Note 2)	12.0	Kilovolts
Min. Anode Supply Voltage	3.5	Kilovolts d.c.
Max. Peak Anode Current	300	Amperes
Max. Average Anode Current	200	Milliamperes
Max. RMS Anode Current (Note 3)	7.75	Amperes a.c.
Max. epy x ib x prr	3.8×10^9	
Max. Anode Current Rate of Rise	1250	Amperes/μSecond
Peak Trigger Voltage (Note 4)		
Max. Peak Inverse Trigger Voltage	200	Volts
Max. Anode Delay Time (Note 5)	1.0	Microsecond
Max. Anode Delay Time Drift	0.15	Microsecond
Max. Time Jitter (Note 6)	0.05	Microsecond
Ambient Temperature	-50° to +90°	Cent.
Shock Rating	13°	Navy (Flyweight) Shock Machine

TYPICAL OPERATION AS PULSE MODULATOR, DC RESONANT CHARGING:

Peak Network Voltage	12.0	Kilovolts
Pulse Repetition Rate	2500	Pulses/Second
Pulse Length	0.4	Microsecond
Pulse Forming Network Impedance	48	Ohms
Trigger Voltage	200	Volts
Peak Power Output (Resistive Load 92% Zn)	736	Kilowatts
Peak Anode Current	130	Amperes
Average Anode Current	0.13	Amperes d.c.

Note 1:

Cooling permitted. However, there shall be no air blast directly on the bulb.

Note 2:

During the first 25 microseconds after conduction, the peak inverse anode voltage shall not exceed 5.0 KV.

Note 3:

The root mean square anode current shall be computed as the square root of the product of the peak current and the average current.

NOTE 4:

THE PULSE PRODUCED BY THE DRIVER CIRCUIT SHALL HAVE THE FOLLOWING CHARACTERISTICS WHEN VIEWED AT THE KU-25 SOCKET WITH THE GRID OF THE TUBE DISCONNECTED:

A.	VOLTAGE	200-300 VOLTS
B.	DURATION	2 MICROSECONDS (AT 70% POINTS)
C.	RATE OF RISE	200 VOLT/MICROSECOND (MIN.)
D.	IMPEDANCE	50-500 OHMS (MAX.)

THE LIMITS OF ANODE TIME DELAY AND ANODE TIME JITTER ARE BASED ON THE MINIMUM TRIGGER. USING THE HIGHEST PERMISSIBLE TRIGGER VOLTAGE AND LOWEST TRIGGER SOURCE IMPEDANCE MATERIALLY REDUCES THESE VALUES BELOW THE LIMITS SPECIFIED.

NOTE 5:

THE TIME OF ANODE DELAY IS MEASURED BETWEEN THE 26 PERCENT POINT ON THE RISING PORTION OF THE UNLOADED GRID VOLTAGE PULSE AND THE POINT AT WHICH EVIDENCE OF ANODE CONDUCTION FIRST APPEARS ON THE LOADED GRID PULSE.

NOTE 6:

TIME JITTER IS MEASURED AT THE 50 PERCENT POINT ON THE ANODE CURRENT PULSE.

ADDITIONAL INFORMATION FOR SPECIFIC APPLICATIONS CAN BE OBTAINED FROM THE

ELECTRON TUBE APPLICATIONS SECTION
ITT COMPONENTS DIVISION
POST OFFICE BOX 412
CLIFTON, NEW JERSEY

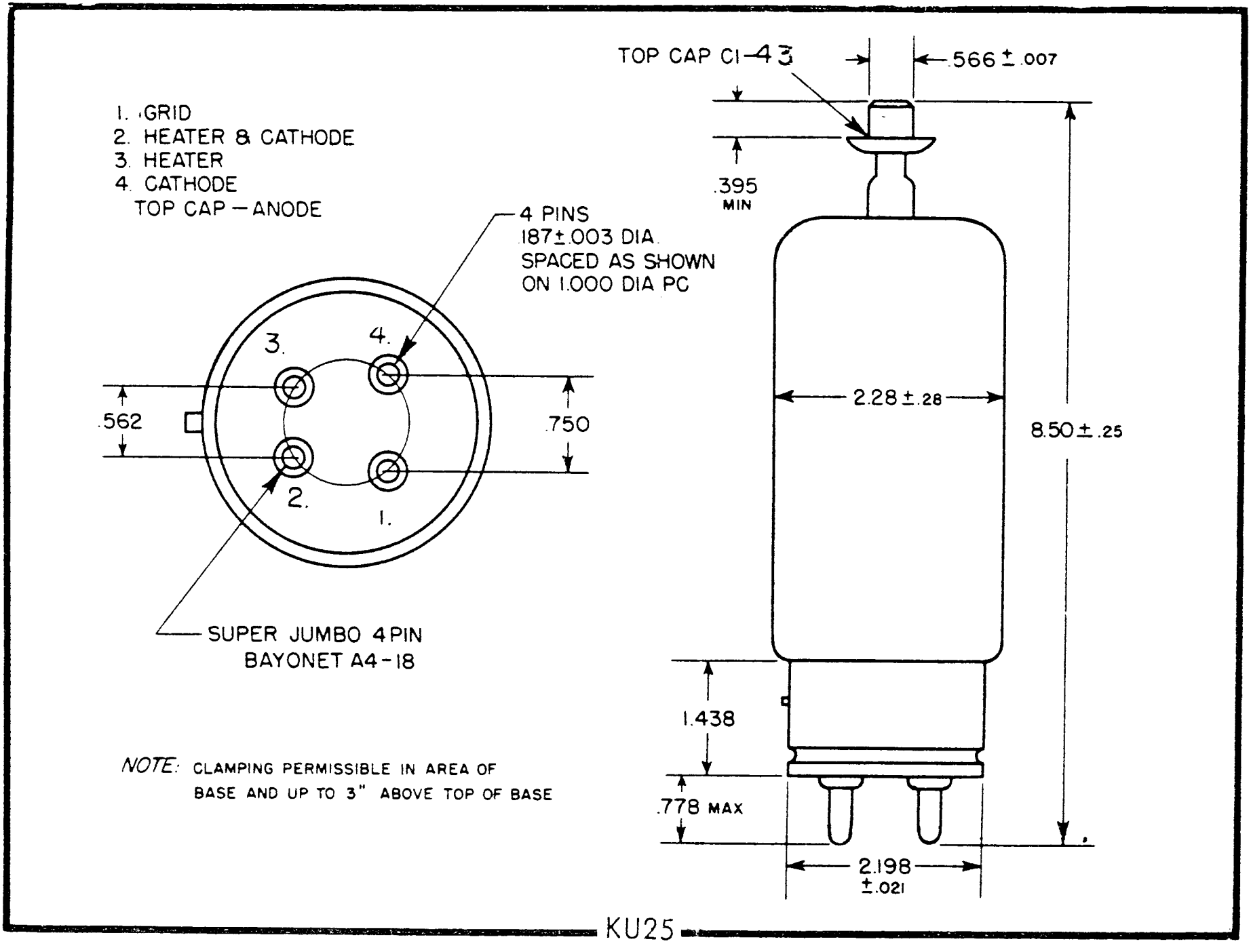
1. GRID
2. HEATER & CATHODE
3. HEATER
4. CATHODE
TOP CAP — ANODE
4 PINS
.187±.003 DIA.
SPACED AS SHOWN
ON 1.000 DIA PC
3.
4.
2.
1.
.562
.750
SUPER JUMBO 4 PIN
BAYONET A4-18
NOTE: CLAMPING PERMISSIBLE IN AREA OF
BASE AND UP TO 3" ABOVE TOP OF BASE
TOP CAP C1-43
.566±.007
.395
MIN
2.28±.28
8.50±.25
1.438
.778 MAX
2.198
±.021

KU25

ITT ELECTRON TUBE DIVISION

HYDROGEN THYRATRON KU-27

DESCRIPTION:

The KU-27 is a unipotential cathode, three element hydrogen filled thyratron designed for network discharge service. In such service, it is suitable for producing pulse outputs of more than 2 megawatts at an average power level of more than 1.6 KW.

The KU-27 features multiple cathode connections to provide minimum inductance for fast rise time applications. A separate connection is made to the reservoir heater so that the optimum hydrogen pressure can be selected for very high voltage or other special applications. (See Note 7).

Other features of the KU-27 include an internal hydrogen reservoir (not connected across the filament) capable of producing and maintaining the hydrogen pressure throughout the useful life of the tube. Further features are the high peak voltage and current ratings and the ruggedized construction.

ELECTRICAL DATA, GENERAL:

	Nom.	Min.	Max.						
Heater Voltage	6.3	5.9	6.7	Volts AC	Reservoir Current.				
Heater Current.					Eres = 6.3 Volts	0.9	0.7	1.1	Amperes
Eh = 6.3 volts		9.0	11.0	Amperes	Minimum Heating Time	3 Minutes			
Reservoir Voltage	6.3	(See Note 7)		Volts AC					

MECHANICAL DATA, GENERAL:

Mounting Position	Any	Anode Cap	C1-43
Base	A7-17 Medium Metal Shell Giant 7-Pin with Bayonet	Cooling	Note 1
		Net Weight	10 ounces

DIMENSIONS:

See Outline Drawing.

Ratings:

Max. Peak Anode Voltage, Forward (Note 7)	16.0 Kilovolts	Max. Peak Average Anode Current	325 Amperes
Max. Peak Anode Voltage, Inverse (Note 2)	16.0 Kilovolts	Max. Average Anode Current	225 Milliamperes
Min. Anode Supply Voltage	3.5 Kilovolts DC	Max. RMS Anode Current (Note 3)	6.3 Amperes AC
		Max. epy x ib x prr	3.9 X 10⁹
		Max. Anode Current Rate of Rise	1500 Amperes/u second
		Peak Trigger Voltage	Note 4
		Max. Peak Inverse Trigger Voltage	200 Volts

	Initial Limit	End of Life Limit			
Max. Anode Delay Time (Note 5)	0.6	0.6	Microsecond	Ambient Temperature	−50° to + 90° Cent.
Max. Anode Delay Time Drift	0.1	0.1	Microsecond	Shock Rating	24° Navy (Flyweight) Shock Machine
Max. Time Jitter (Note 6)	0.0005	0.01	Microsecond		

ITT Components Group Europe
Standard Telephones and Cables Limited
Valve Division, Brixham Road, Paignton, Devon
Telephone: Paignton 50762 (STD Code 0803) Telex: 42830
London Sales Office, Telephone: 01-300 3333 Telex: 21836

ITT COMPONENTS

© 1969 International Telegraph and Telephone Corporation.
All rights reserved

Note 1:

Cooling permitted. However, there shall be no air blast directly on the bulb.

Note 2:

The peak inverse anode voltage shall not exceed 5.0 KV during the first 25 microseconds after the pulse.

Note 3:

The root mean square anode current shall be computed as the square root of the product of the peak current and the average current.

Note 4:

The driver pulse, measured at the tube socket with the thyratron grid disconnected, shall have the following characteristics:

A.	Voltage	200-300 Volts
B.	Duration	2 Microseconds (at 70% points)
C.	Rate of Rise	200 Volts 'microsecond (min.)
D.	Impedance	50-500 Ohms

The limits of anode time delay and anode time jitter are based on the minimum trigger. Using the highest permissible trigger voltage and lowest trigger source impedance materially reduces these values below the limits specified.

Note 5:

The time of anode delay is measured between the 26 percent point on the rising portion of the unloaded grid voltage pulse and the point at which evidence of anode conduction first appears on the loaded grid pulse.

Note 6:

Time jitter is measured at the 50 percent point on the anode current pulse.

Note 7:

The KU-27 is provided with a reservoir heater connection separate from the cathode heater so that the user may select the optimum hydrogen pressure for his particular application. For example, although the KU-27 is rated and tested to a peak anode voltage of 16 KV, the tube has frequently been high voltage seasoned by the user and successfully operated to a considerably higher anode voltage. This will normally require a reservoir setting 10 - 20% lower than 6.3V.

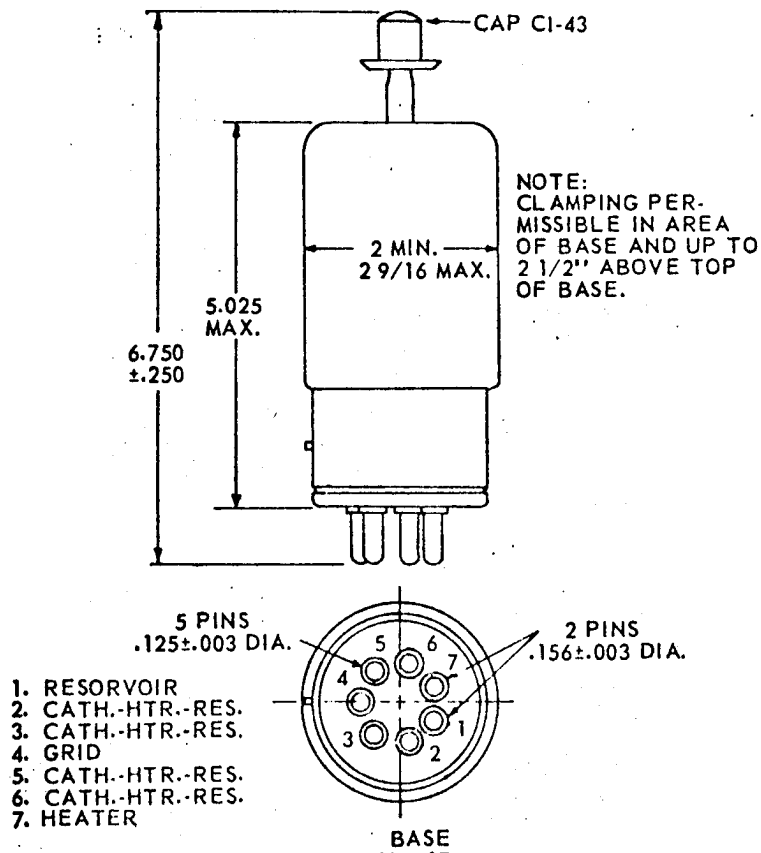

ITT ELECTRON TUBE DIVISION
BOX 100 EASTON, PA. 18043
INTERNATIONAL TELEPHONE AND TELEGRAPH CORPORATION

CROWBAR THYRATRON

DESCRIPTION:

The type KU-471 is a ceramic hydrogen thyratron designed for Crowbar service. This tube is equipped with a hydrogen reservoir for maximum dependability.

ELECTRICAL DATA, GENERAL:	Nom.	Min.	Max.	
Heater Voltage	6.3	5.8	6.8	Volts AC
Heater Current (at 6.3 volts)	5.5	3.5	7.0	Amperes
Reservoir Voltage (Note 1)		2.5	6.3	Volts
Reservoir Current		1.0	2.0	Amperes
Minimum Heating Time			3	Minutes

MECHANICAL DATA, GENERAL:

Mounting Position		Any
Base		See Outline
Cooling (Note 2)		
Net Weight	0.3	Pounds
Dimensions		Per Outline

RATINGS:

Max. Peak Anode Voltage, Forward, Transient (Note 3)	20.0	Kilovolts
Max. Peak Anode Voltage, Forward, Operating	16.0	Kilovolts
Max. Peak Anode Voltage, Inverse	16.0	Kilovolts
Min. Anode Supply Voltage	0.5	Kilovolts DC
Max. Peak Anode Current (Note 4)	250	Amperes
Averaging Time	10	Seconds
Max. Discharge Time (Note 4)	0.1	Seconds
Peak Trigger Voltage (Note 5)		
Max. Anode Delay Time	1.0	Microseconds
Ambient Temperature	-55° to $+100^{\circ}$	C

Note 1:

Adjust reservoir voltage to value indicated on tube within ± 5%.

Note 2:

No cooling required.

Note 3:

The maximum peak forward transient anode voltage rating applies to a transient voltage condition wherein the duration of the transient does not exceed two seconds.

Note 4:

The allowable time of discharge varies with the current as shown:

Rectifier Short Circuit Period	1.5 - 100 ms	5 A
" " " "	1.5 - 50 ms	10 A
" " " "	1.5 - 30 ms	20 A
Filter Discharge "	0 - 1.5 ms	250 A

Time will be measured from the initiation of the discharge.

Note 5:

The driver pulse measured at the tube socket with the thyratron grid disconnected shall be: egy = 200 Volts minimum; tp = 2.0 Microseconds minimum; impedance of driver circuit 50 - 500 Ohms.

KU-471

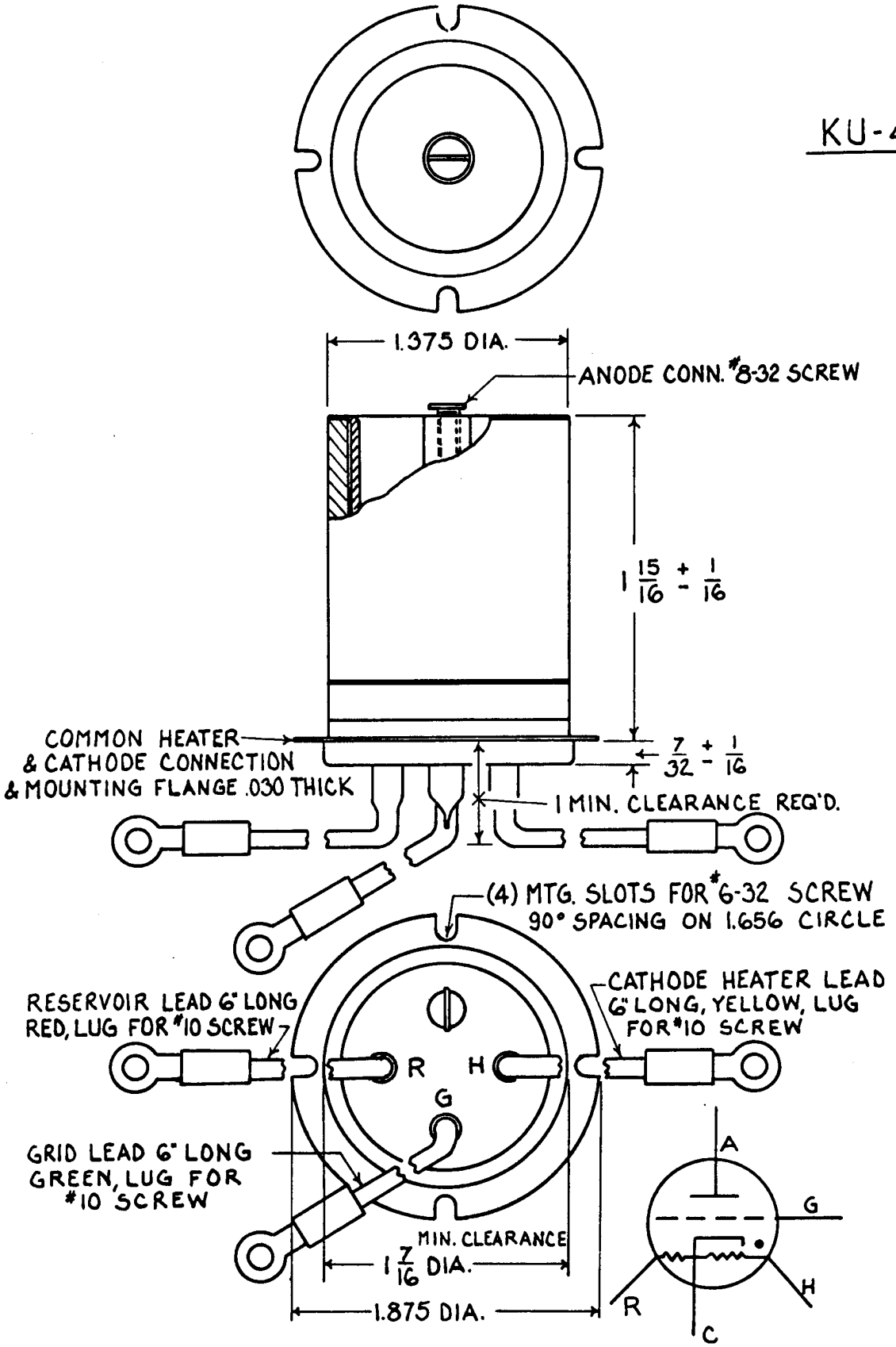

ITT ELECTRON TUBE DIVISION
BOX 100 EASTON, PA. 18043
INTERNATIONAL TELEPHONE AND TELEGRAPH CORPORATION

MILITARY SPECIFICATION

TUBE, ELECTRON, TYPE USAF KU-54

1. SCOPE

1.1 This specification covers a Hydrogen Thyratron Tube; designated Type USAF KU-54.

2. APPLICABLE SPECIFICATIONS AND STANDARDS

2.1 The following specifications, and standard, of the issue in effect on the date of invitation for bids, shall form a part of this specification to the extent specified herein:

SPECIFICATIONS

Military

MIL-E-1	Electron Tubes

STANDARD

Military

MIL-STD-129	Marking of Shipments

(Copies of specifications and standard required by contractors in connection with specific procurement functions should be obtained from the procuring agency or as directed by the contracting officer.)

3. REQUIREMENTS

3.1 General. - The requirements in Specification MIL-E-1 are applicable as requirements of this specification with the following additions or exceptions to Specification MIL-E-1 as identified by the similarity of paragraph headings. Where the requirements of the general specification and this specification conflict, the requirements of this specification shall govern.

Carpenter Litho & Prtg Co., Springfield, Ohio 3-53-1500

3.2 Characteristics. - The Electron Tube shall have the following ratings:

Ratings	Ef Vac	epy kv	epx kv	Ebb kVdc	ecy v	ecx v	Ec Vdc	ib a	Ib Adc
Absolute Maximum:	6.3 (5%)	25.0 (Note 15)	25.0 (Note 1)	---	---	650	---	1000	1.0
Minimum:	---	10.0	5% epy	5.0	(Note 2)	---	---	---	---
Test Cond.:	6.3	25.0	---	---	550	---	0	---	---

Ratings:	Cooling	epy x prr x ib	tk sec.	TA °C	dik/dt a/us	Reservoir (Ef) Vac
Absolute Maximum	--- Note 3	--- 9.0×10^9	---	+75	4500	5.5 (Note 4)
Minimum:	---	---	900	-55	----	2.5
Test Cond.:	---	---	900			(Note 5)

**Base: Per Outline, Figure 1 **Cathode: Unipotential, tied to Midpoint of Heater
* ad Connections: Per Outline
Mounting Position: Vertical Only, Base Down **Dimensions: Per Outline, Figure 1

4. SAMPLING, INSPECTION AND TEST PROCEDURES

4.1 General. - The sampling, inspection and test procedures specified in Specification MIL-E-1 are applicable as sampling, inspection and test procedures of this specification with the following additions or exceptions to Specification MIL-E-1 as identified by the similarity of paragraph headings:

Ref.	Test	Conditions		Min.	Max.
4.2	Qualification Approval:	Required			
3.7	Marking of Tubes:	Tubes shall be marked USAF KU-54			
4.5	Holding Period:	T-96 hours			
4.9.18.1.6	Drop:				
4.10.8	Cathode Heater Current:		If:	25.0	33.0 Aac
4.10.8	Reservoir Heater Current:	Eres=4.5Vac	Ires:	3.0	6.0 Aac
---	(T) Instantaneous Starting:	epy=18kv(min) Notes 6 and 13	---	---	---
4.10.17.2	DC Anode Voltage:	Notes 6 and 11	Ebb:	---	4000 Vdc

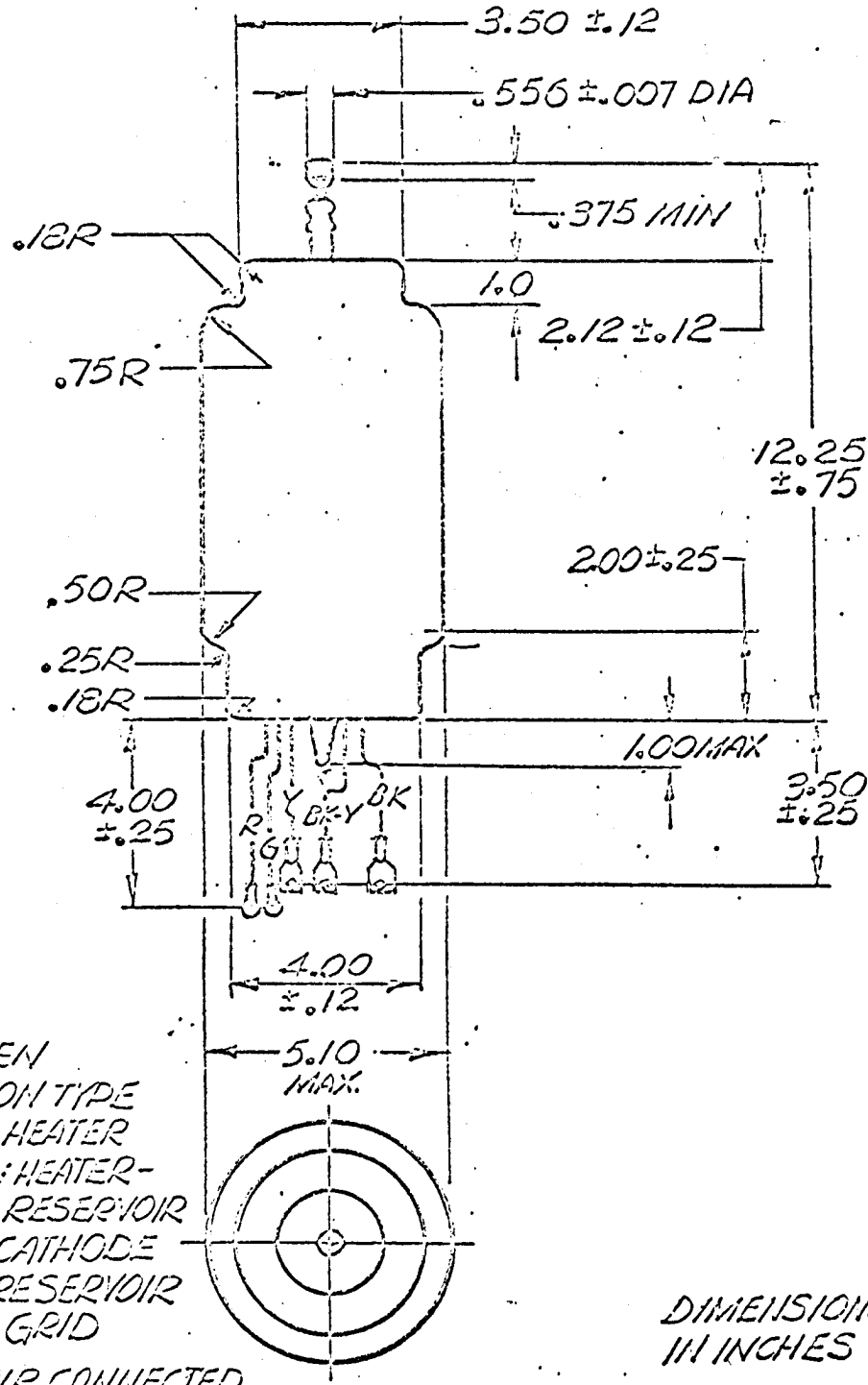

FIGURE 1. ELECTRON TUBE TYPE USAF KU-54

Ref.	Test	Conditions		Min.	Max.
---	Operation (1):	epy=25.0kv; prr-360pps (min); Note 6	egy:	---	550 v
---	*Anode Delay Time:	Operation (1)Note 12: t=120	tad:	---	1.0 us
---	*Anode Delay Time Drift:	Anode Delay Time; Note 14	Δ tad:	---	0.25 us
---	*Time Jitter:	Operation (1) except epy=8kv; Note 7	tj:	---	0.01 us
---	Operation (2):	Note 10; t=10 minutes prr= 1500 pps	egy:	---	550 v
---	Reservoir Voltage (2):	Operation (2); Note 4	Eres:	2.5	5.5 Vac
---	**Operation (3)	TA=75°C; t=5.0 hrs; Note 6; prr=360pps	egy	---	550 v
4.10.24	Emission	ik=1500a; tp=5.0 us ±10% prr=60pps ±10%; tr=0.5us Max; Note 9	egk:	---	400 v
4.11	Life Test	Group C; Operation (2) Note 8	t:	500	---hrs.
4.11.4	Life Test End Point	Operation (1) Note 17	egy:	---	700 v
		DC Anode Voltage	Ebb:	---	4500 Vdc
		Time Jitter	tj:	---	0.02 us

Note 1: In pulsed operation, the peak inverse voltage, exclusive of a spike of .05 us max. duration, shall not exceed 5.0 kv during the first 25 us following the anode pulse.

Note 2: The Driver pulse, measured at tube socket with thyratron grid disconnected: 700 volts (min); tr=0.20 us (max) between 225 and 675 volts point; grid pulse duration 1.0 microsecond (min). Impedance of drive circuit 40 to 200 ohms.

Note 3: Cooling of the anode lead is permissible, but there shall be no air blast directly on the bulb.

Note 4: The optimum reservoir voltage for operation in accordance with Operation (2) conditions is permanently inscribed on the (upper half) of the bulb of the tube and must be held to within ±5%. Applications involving other operating conditions will necessitate the redetermination of the optimum reservoir voltage.

Note 5: Adjust reservoir voltage to value indicated on tube within ±5%.

Note 6: The tube shall be tested in the test circuit shown in Figure 2. Tests performed at repetition rates less than the resonant rate shall be made with a hold-off diode in the charging circuit. The circuit constants shall be chosen under resonant charging conditions so that epy=25kv; ib 1000a (min), rate of rise of current pulse ($\frac{dik}{dt}$) shall be 4500a/us (min), tp=2.5±0.25us; prr=500 pps (min).

Grid pulse measured at tube socket with thyratron gird disconnected shall have the following conditions: tr=.35us(min): tp=2.0us (max). Internal impedance of driver: 250 ohms (min).

The tube shall operate continuously for 30 minutes without evidence of arcback, or anode heating.

Note 7: The tube shall be tested by applying a peak forward anode voltage not to exceed that specified in the test conditions for the Time Jitter test immediately after the cathode warm-up period (tk). The variation in firing time(tj) shall be measured at 50% of the pulse amplitude and shall not be greater than the amount specified after 60 seconds of operation.

Note 8: During every 96 hour period, the life test shall be shut off for 30 minutes (min).

Note 9: The positive pulse shall be applied to the grid of the tube. Measure the voltage between grid and cathode not more than 2.5 us (max), after the beginning of the current pulse. The average voltage shall not rise during the last 4.0us. Plate Floating. As an alternate, the test maybe conducted by connecting the grid to the plate through a one-ohm resistance, applying the positive pulse and reading epk. The limit for this reading will be the same as that for egk in Emission Test.

Note 10: The anode circuit constants shall be so chosen that epy=15kV, ib=500a (min) and rate of rise of current pulse ($\frac{dik}{dt}$) =4500a/us(min), tp=1.3us ±10% (min), prr=1500pps(min), and epx= 1.5kv (min). Grid pulse same as Note 6. Reservoir voltage shall be adjusted to optimum value for these test conditions. (The tube shall operate without evidence of arc back. or anode heating. 3 added

Note 11: This test shall be conducted within 60 seconds of the Operation (1) test.

Note 12: Anode delay time (tad): The time interval between the rising portion of the grid pulse which is 26% of the maximum unloaded pulse amplitude and the point where anode conduction takes place.

Note 13: This test shall be the first test performed after the holding period. The tube shall operate satisfactorily on push-button starting within 3 attempts when the anode voltage (epy) is applied to the tube under test in such a manner as to rise from 0 to 18kv(min) within 0.03 seconds. (The filter in the rectifier shall be designed so that the epy reaches at least 9kv within 0.015 seconds.) The intervals between successive attempts to instantaneously start the tube shall not be less than 10 or more than 30 seconds. Any tube failing to start within three attempts will be considered a failure.

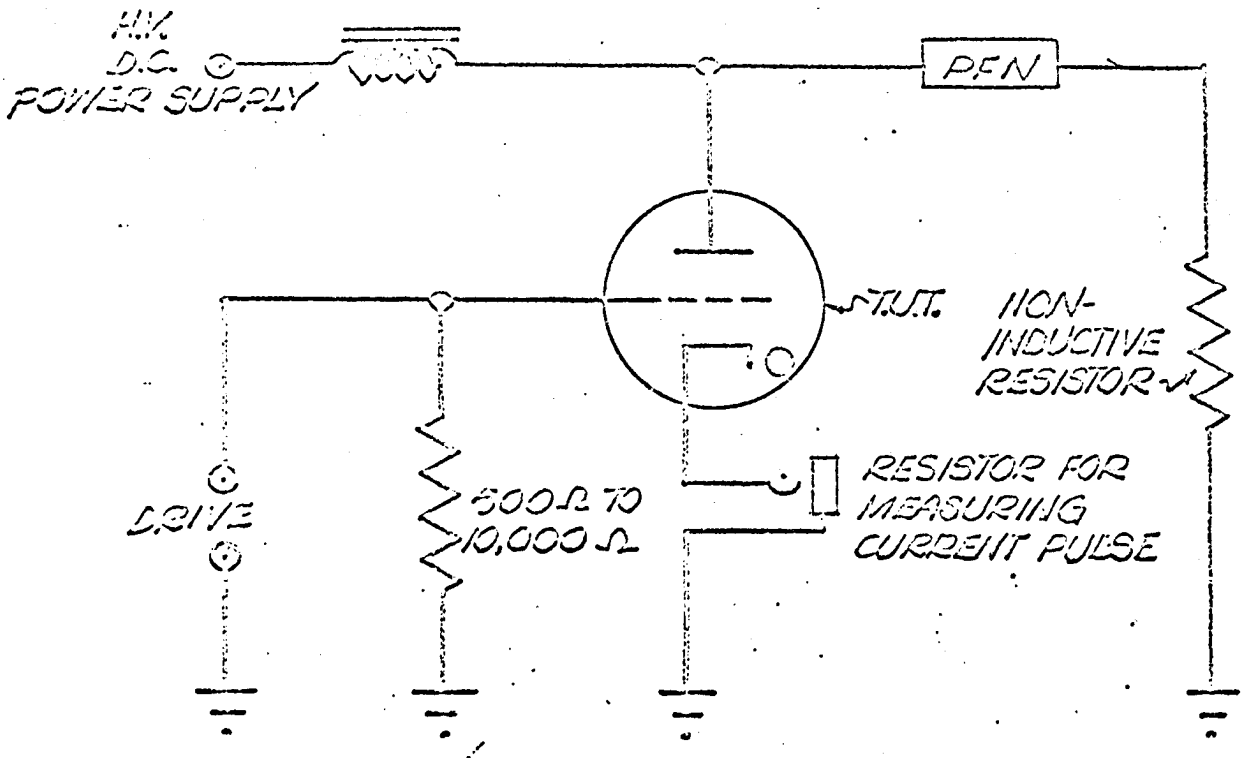

FIG. 2. TEST CIRCUIT

Note 14: During interval between 2 minutes and 7 minutes of the Anode Delay Time test, the change in Anode Delay Time (Δ tad) relative to the tad value observed on the Anode Delay Time test shall not exceed the specified value.

Note 15: Instantaneous starting is not recommended. When it is absolutely necessary, however, the maximum permissible epy is 18.0 kv and shall not be attained in less than 0.04 seconds.

Note 16: The heater-reservoir lead shall be terminated in a 70 ampere soldering lug with a 1/4 inch screw hole. The other heater and the cathode lead shall be terminated in a 50 ampere soldering lug with a 3/16 inch hole. Reservoir and grid leads shall be terminated in 25 ampere soldering lugs with 3/16 inch screw holes. The lugs shall be permanently identified with symbols as follows: "G"--Grid, "K"--Cathode, "H"--Heater, and "R"--Reservoir. For lead length, see outline drawing, Figure 1.

Note 17: Evidence of anode color at the end of Operation (1) life test end point check shall not be cause for rejection.

5. PREPARATION FOR DELIVERY

5.1 The electron tube shall be prepared for delivery in accordance with Specification MIL-E-1 and as follows:

5.1.1 Marking of Shipment. - Interior packages and exterior shipping containers shall be marked in accordance with Standard MIL-STD-129. The nomenclature shall include the following:

Tube, Electron, Type USAF, KU-54
Specification MIL-T-4623 (USAF)

6. NOTES

6.1 Use - The electron tube covered by this specification is intended for pulsed switch tube applications.

NOTICE: When Government drawings, specifications, or other data are used for any purpose other than in connection with a definitely related Government procurement operation, the United States Government thereby incurs no responsibility nor any obligation whatsoever; and the fact that the Government may have formulated, furnished, or in any way supplied the said drawings, specifications, or other data, is not to be regarded by implication or otherwise as in any manner licensing the holder or any other person or corporation, or conveying any rights or permission to manufacturer, use or sell any patented invention that may in any way be related thereto.

EDM/eg

TENTATIVE

CERAMIC HYDROGEN THYRATRON

DESCRIPTION:

THE KU-70B IS A UNIPOTENTIAL CATHODE THREE ELEMENT HYDROGEN THYRATRON OF CERAMIC METAL CONSTRUCTION DESIGNED FOR USE IN COMPACT MODULATORS FOR HIGH PERFORMANCE RADARS AND FOR MISSILE APPLICATIONS.

ELECTRICAL DATA, GENERAL:

	Nom.	Min.	Max.		
Heater Voltage	6.3	5.8	6.8		Volts AC
* Heater Current (at 6.3 volts)		2.0	3.2		Amperes
Minimum Heating Time				30	Seconds

MECHANICAL DATA, GENERAL:

Mounting Position	Any
Dimensions	Per Outline

RATINGS:

Max. Peak Anode Voltage, Forward	8.0	Kilovolts
Max. Peak Anode Voltage, Inverse (Note 1)	8.0	Kilovolts
Min. Anode Supply Voltage	0.3	Kilovolts DC
Max. Peak Anode Current	100	Amperes
Max. Average Anode Current	100	Milliamperes
Max. RMS Anode Current (Note 2)	2.0	Amperes AC
Max. eby x ibx x prr (Pb)	2.7×10^9	
Max. Anode Current, Rate of Rise	1000	Amps./u sec.
Peak Trigger Voltage (Note 3)		
Max. Peak Inverse Trigger Voltage	300	Volts
Max. Anode Delay Time (Note 4)	0.50	u second
Max. Anode Delay Time Drift	0.10	u second
Max. Time Jitter (Note 5)	.005	u second
Ambient Temperature	-65 to +150°	C
Shock Rating	200	g.
Vibration	20	g.

* Indicates change from data sheet dated 6-61

Note 1:

The peak inverse voltage should not exceed 2.5 KV during the first 25 microseconds after the pulse.

Note 2:

The root mean square anode current shall be computed as the square root of the product of the peak current and the average current.

Note 3:

The driver pulse, measured at the tube socket with the thyratron grid disconnected should have the following characteristics:

A.	Voltage	150 Volts (min.) to 300 Volts (max.)
B.	Duration	2 Microseconds (at 70 percent points)
C.	Impedance	1500 Ohms (max.)
D.	Time of Rise	0.5 Microsecond (max.)

The limits of anode time delay and anode time jitter are based on the minimum trigger. Using the highest permissible trigger voltage and lowest trigger source impedance materially reduces these values below the limits specified.

Note 4:

The time of anode delay is measured between the 26 percent point on the rising portion of the unleaded grid voltage pulse and the point at which evidence of anode conduction first appears on the loaded grid pulse.

Note 5:

Time jitter is measured at the 50 percent point on the anode current pulse.

Additional information for specific applications can be obtained from the

Electron Tube Applications Section
ITT Components Division
Post Office Box 412
Clifton, New Jersey

OUTLINE

KU-708

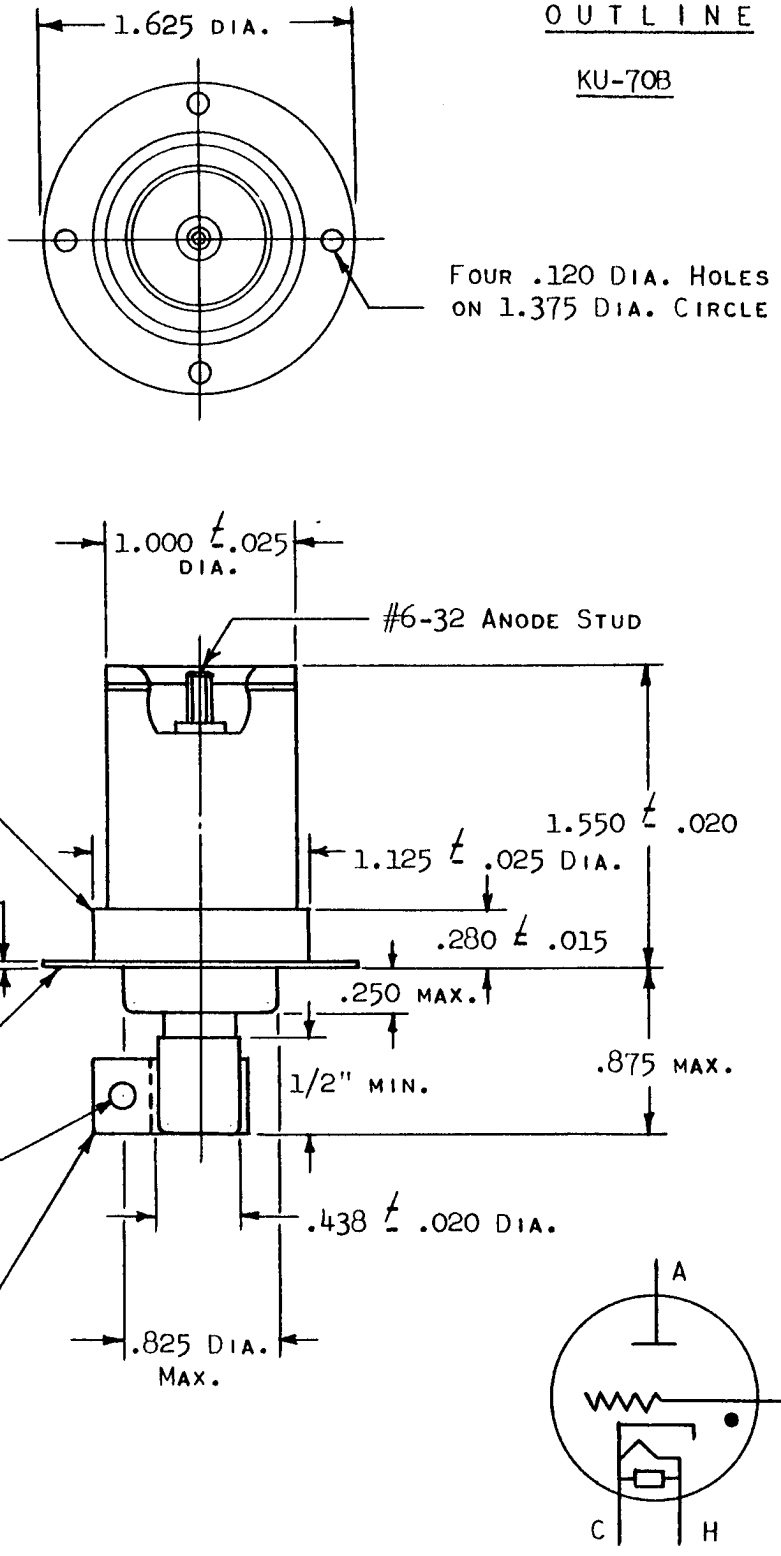

ELECTRON TUBE DEPARTMENT ■ COMPONENTS DIVISION
INTERNATIONAL TELEPHONE AND TELEGRAPH CORPORATION, CLIFTON, NEW JERSEY

TENTATIVE

CERAMIC HYDROGEN DIODE

DESCRIPTION:

THE KU-92 IS A CERAMIC ENVELOPE, INDIRECTLY HEATED, HYDROGEN FILLED DIODE FOR USE IN HIGH VOLTAGE RECTIFIER AND CLIPPER CIRCUITS. THIS TUBE, EQUIPPED WITH A HYDROGEN RESERVOIR WILL GIVE EXCELLENT RESULTS UNDER SEVERE ENVIRONMENTAL SERVICE.

THE INHERENT IMMUNITY FROM ELECTRICAL SURGE DAMAGE, AND RUGGED PHYSICAL CONSTRUCTION SUIT THIS DIODE TO COMPACT HIGH POWER RECTIFIERS AND MODULATORS.

ELECTRICAL DATA, GENERAL:

	Nom.	Min.	Max.	
Heater Voltage	5.0	4.7	5.3	Volts AC
Heater Current (at 5.0 volts)		7.5	9.5	Amperes
Heater (Note 1)				
Reservoir Voltage (Note 2)		4.7	5.3	Volts
Reservoir Current at 5.0 volts		1.0	3.0	Amperes
Minimum Heating Time			3	Minutes

MECHANICAL DATA, GENERAL:

* Mounting Position (Note 3)	Any	
Base	Per Outline Dwg.	
Cooling (Note 4)		
Net Weight	0.6	Pounds
Dimensions	Per Outline	

MAXIMUM RATINGS:

	Rectifier	Clipper	Back Swing Diode	
Peak Inverse Anode Voltage	15.0	20.0	20.0	Kilovolts
Peak Anode Current	3.0	300	300	Amperes
Average Anode Current	600	200	200	Milliamperes
R.M.S. Anode Current	-	6.0	6.0	Amperes
Anode Voltage Drop	70	250	250	Volts
Initial Firing Voltage (Note 5)	100	-	-	Volts
Recurrent Firing Voltage	60	-	-	Volts
Ambient Temperature	- 55 to 125			degrees C

* Indicates change from data sheet dated 6-61

Note 1:

See outline drawing for connections.

Note 2:

The optimum reservoir voltage for rectifier and pulse transformer backswing clipper service is 5.0 volts. This may be obtained by direct connection to the cathode heater supply. For use in certain types of inverse clipper service, a reservoir voltage somewhat higher or lower may be required. (Eres 4.0 - 6.0 volts)

Note 3:

* Vertical position recommended but not required.

Note 4:

Air blast cooling (5 cfm) is recommended about the base and anode for operation in high ambient temperature.

Note 5:

The root mean square anode current shall be computed as the square root of the product of peak and the average current.

Additional information for specific applications can be obtained from the

Electron Tube Applications Section
ITT Components Division
Post Office Box 412
Clifton, New Jersey

* Indicates change from data sheet dated 6-61

OUTLINE

KU-92

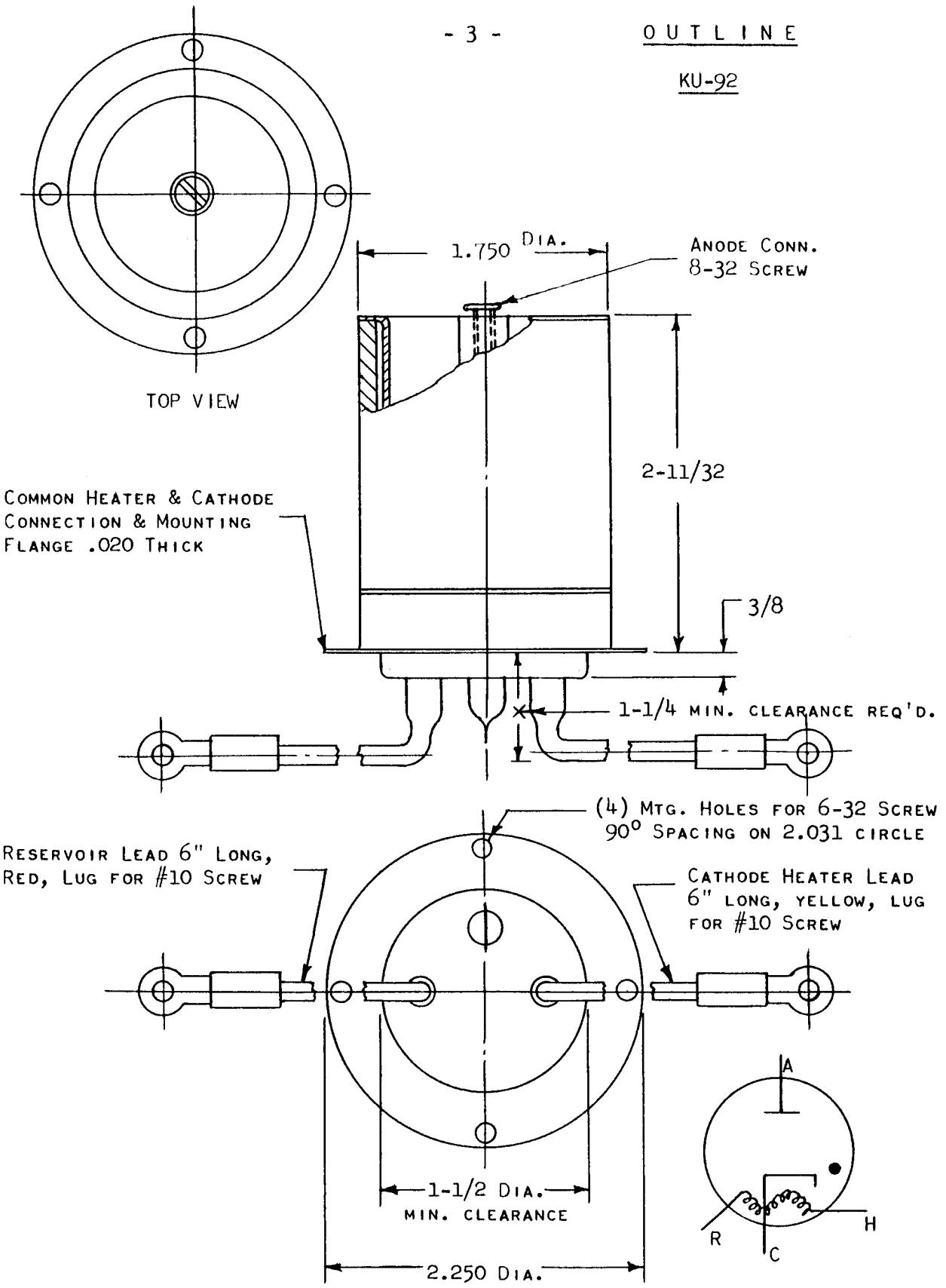

ITT ELECTRON TUBE DIVISION
CLIFTON, NEW JERSEY
INTERNATIONAL TELEPHONE AND TELEGRAPH CORPORATION

TENTATIVE

CERAMIC HYDROGEN DIODE

DESCRIPTION:

THE KU-93 IS A CERAMIC ENVELOPE, INDIRECTLY HEATED, HYDROGEN FILLED DIODE FOR USE IN HIGH VOLTAGE RECTIFIER AND CLIPPER CIRCUITS. THIS TUBE, EQUIPPED WITH A HYDROGEN RESERVOIR WILL GIVE EXCELLENT SERVICE UNDER SEVERE ENVIRONMENTAL CONDITIONS.

THE INHERENT IMMUNITY FROM ELECTRICAL SURGE DAMAGE, AND RUGGED PHYSICAL CONSTRUCTION SUIT THIS DIODE TO COMPACT HIGH POWER RECTIFIERS AND MODULATORS.

ELECTRICAL DATA, GENERAL:

	Nom.	Min.	Max.	
Heater Voltage	5.0	4.7	5.3	Volts AC
Heater Current (at 5.0 volts)		15.0	27.0	Amperes
Heater (Note 1)				
Reservoir Voltage (Note 2)	5.0	4.7	5.8	Volts
Reservoir Current at 5.0 Volts		3.5	5.5	Amperes
Minimum Heating Time			5	Minutes

MECHANICAL DATA, GENERAL:

Mounting Position	Vertical only,	base down
Base		Per Outline
Cooling (Note 3)		
Net Weight	3.0	Pounds
Dimensions (See Outline Drawing)		

MAXIMUM RATINGS:

	Rectifier	Clipper	Back Swing Diode	
Peak Inverse Anode Voltage	20.0	30.0	30.0	Kilovolts
Peak Anode Current	8.0	500	500	Amperes
Average Anode Current	2.0	1.0	2.0	Amperes
R.M.S. Anode Current (Note 4)	4.0	15.0	15.0	Amperes
Anode Voltage Drop	70	500		Volts
Initial Firing Voltage (Note 5)	100			Volts
Recurrent Firing Voltage	60			Volts
Ambient Temperature	- 55° to + 125°			Centigrade

Note 1:

See outline drawing.

Note 2:

The optimum reservoir voltage for rectifier and pulse transformer back swing clipper service is 5.0 volts. This may be obtained by direct connection to the cathode heater supply. For use in certain types of inverse clipper service, a reservoir voltage somewhat higher or lower may be required (Eres 4.0 - 6.0 volts).

Note 3:

Air blast cooling (10 cfm) is recommended about the base and anode for operation in high ambient temperature.

Note 4:

The root mean square anode current shall be computed as the square root of the product of peak current and the average current.

Note 5:

It is recommended that the baffle be left floating for rectifier service. The baffle should be connected to the cathode for clipper service.

Additional information for specific applications can be obtaine from the

Electron Tube Applications Section
ITT Electron Tube Division
Post Office Box 104
Clifton, New Jersey

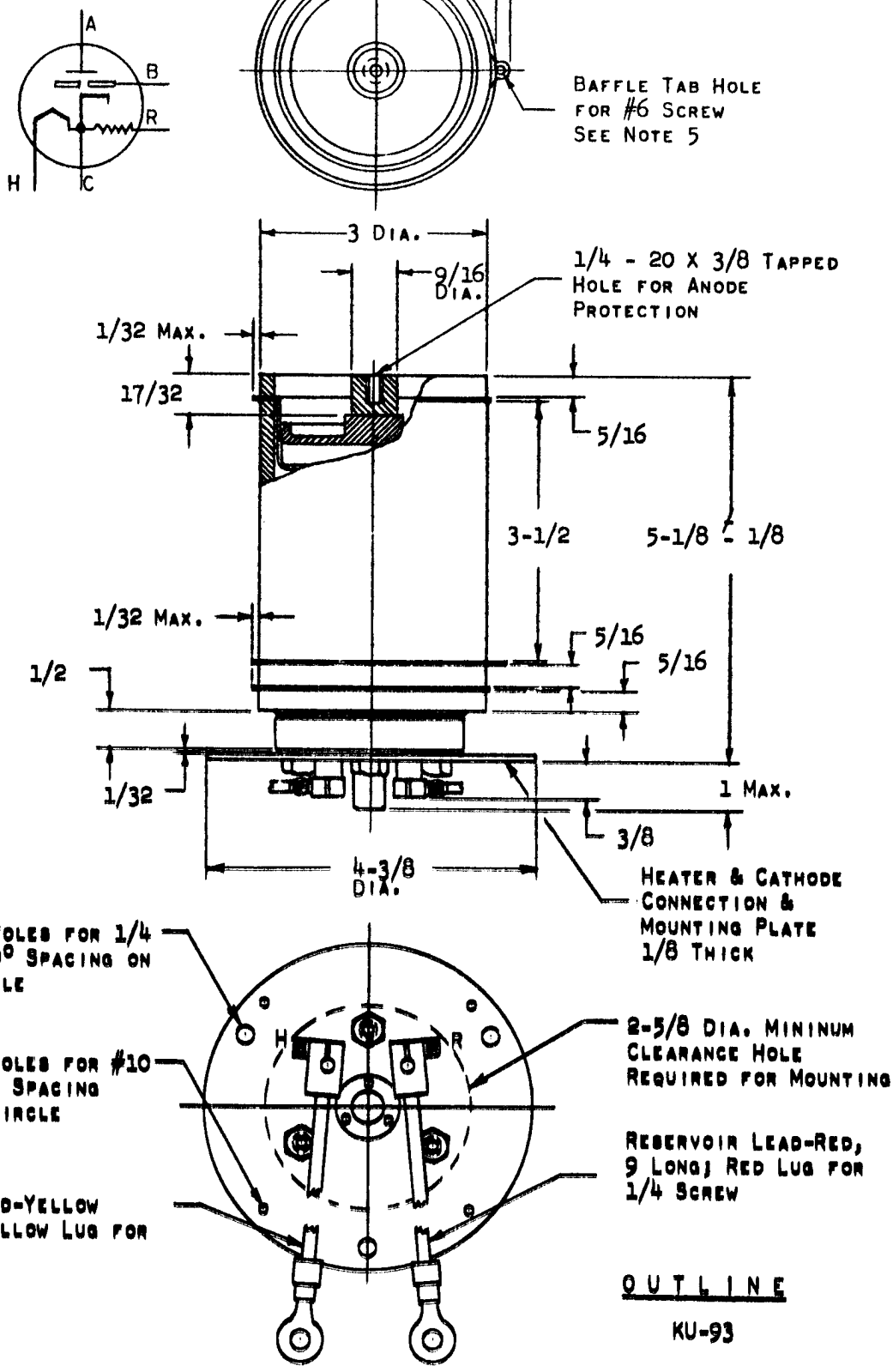

OUTLINE

KU-93

ITT ELECTRON TUBE DIVISION
CLIFTON, NEW JERSEY
INTERNATIONAL TELEPHONE AND TELEGRAPH CORPORATION

ELECTRON TUBE DEPARTMENT ■ COMPONENTS DIVISION
INTERNATIONAL TELEPHONE AND TELEGRAPH CORPORATION, CLIFTON, NEW JERSEY

KUTHE
KU-94

TENTATIVE

CERAMIC HYDROGEN DIODE

DESCRIPTION:

THE KU-94 IS A CERAMIC ENVELOPE HYDROGEN FILLED DIODE. THIS TUBE IS DESIGNED FOR RECTIFIER AND PULSE TRANSFORMER BACKSWING DIODE CLIPPER APPLICATIONS. THE LOW TUBE VOLTAGE DROP AND WIDE RANGE OF AMBIENT OPERATING TEMPERATURES, IDEALLY SUIT THIS TUBE TO THE ENVIRONMENTS ENCOUNTERED IN MILITARY EQUIPMENT.

	ELECTRICAL DATA, GENERAL:	NOM.	MIN.	MAX.	
	HEATER VOLTAGE	5.0	4.7	5.3	VOLTS AC
*	HEATER CURRENT (AT 5.0 VOLTS)		18.0	28.0	AMPERES
	HEATER (NOTE 1)				
	RESERVOIR VOLTAGE (NOTE 2)		4.7	5.3	VOLTS
	RESERVOIR CURRENT AT 5.0 VOLTS		5.0	20.0	AMPERES
	MINIMUM HEATING TIME			5	MINUTES

MECHANICAL DATA, GENERAL:

MOUNTING POSITION	VERTICAL ONLY,	BASE DOWN
BASE (PER OUTLINE)		
COOLING (NOTE 3)		
NET WEIGHT	11.5	POUNDS
DIMENSIONS (SEE OUTLINE DRAWING)		

MAXIMUM RATINGS:	RECTIFIER	CLIPPER	BACK SWING DIODE	
PEAK INVERSE ANODE VOLTAGE	26.0	0	33.0	KILOVOLTS
PEAK ANODE CURRENT	15.0	P	2000	AMPERES
AVERAGE ANODE CURRENT	4.5	E	3.0	AMPERES
R.M.S. ANODE CURRENT	-	N	60	AMPERES
ANODE VOLTAGE DROP	70	-	-	VOLTS
INITIAL FIRING VOLTAGE (NOTE 4)	100	-	-	VOLTS
RECURRENT FIRING VOLTAGE	60	-	-	VOLTS
AMBIENT TEMPERATURE	- 55 TO + 125			DEGREES C

* INDICATES CHANGE FROM DATA SHEET DATED 6-61

Note 1:

Cathode connected to center of cathode heater.

Note 2:

The optimum reservoir voltage for rectifier and pulse transformer back swing clipper service is 5.0 volts. This may be obtained by direct connection to the cathode heater supply. For use in certain types of inverse clipper service, a reservoir voltage somewhat higher or lower may be required (Eres = 4.0 -6.0 volts).

Note 3:

Air blast cooling (10 cfm) is recommended about the base and anode for operation in high ambient temperatures.

Note 4:

It is recommended that the baffle be left floating for rectifier service. The baffle should be connected to the cathode for clipper service.

Additional information for specific applications can be obtained from the

Electron Tube Applications Section
ITT Components Division
Post Office Box 412
Clifton, New Jersey

OUTLINE

KU-94

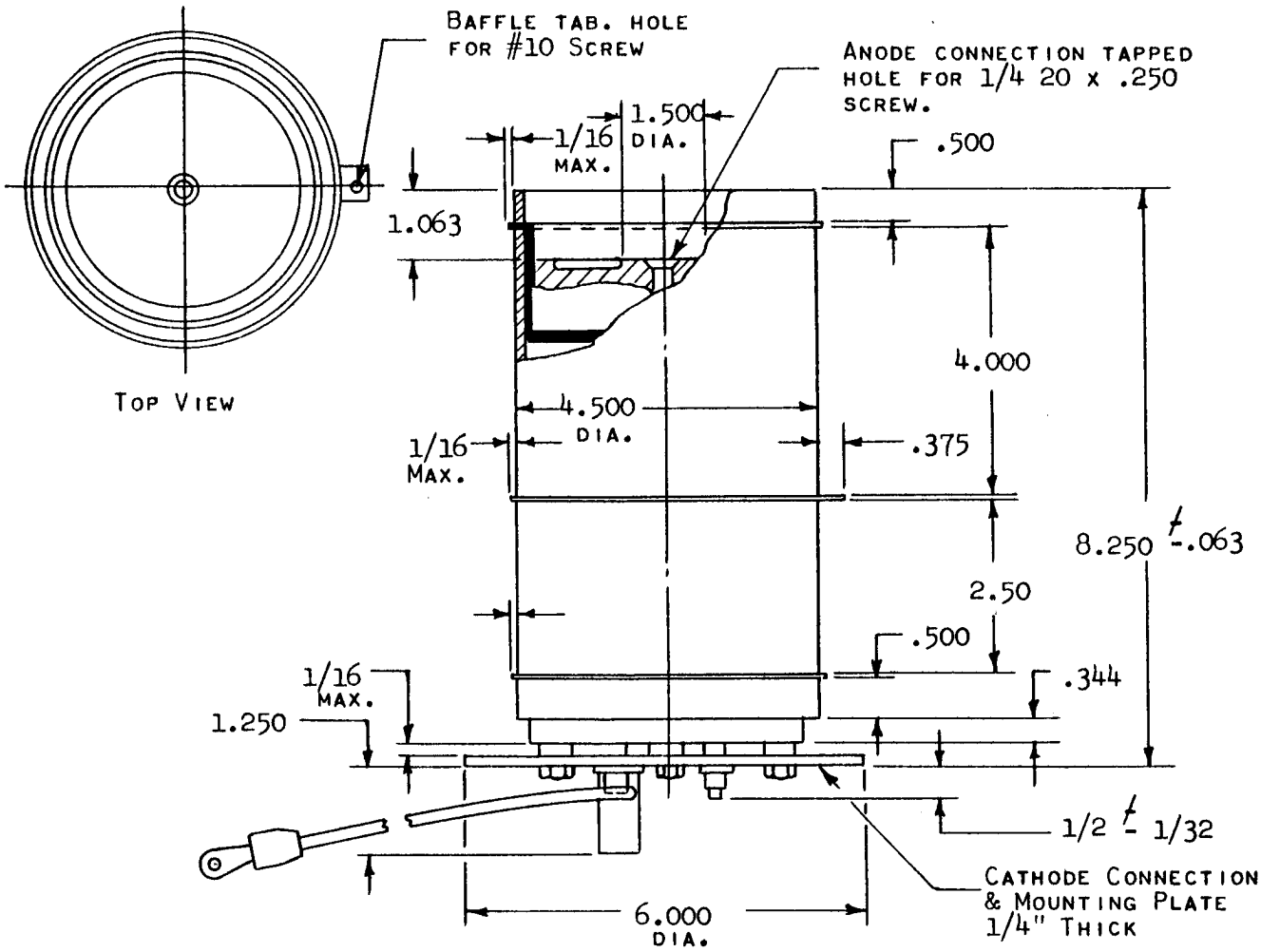

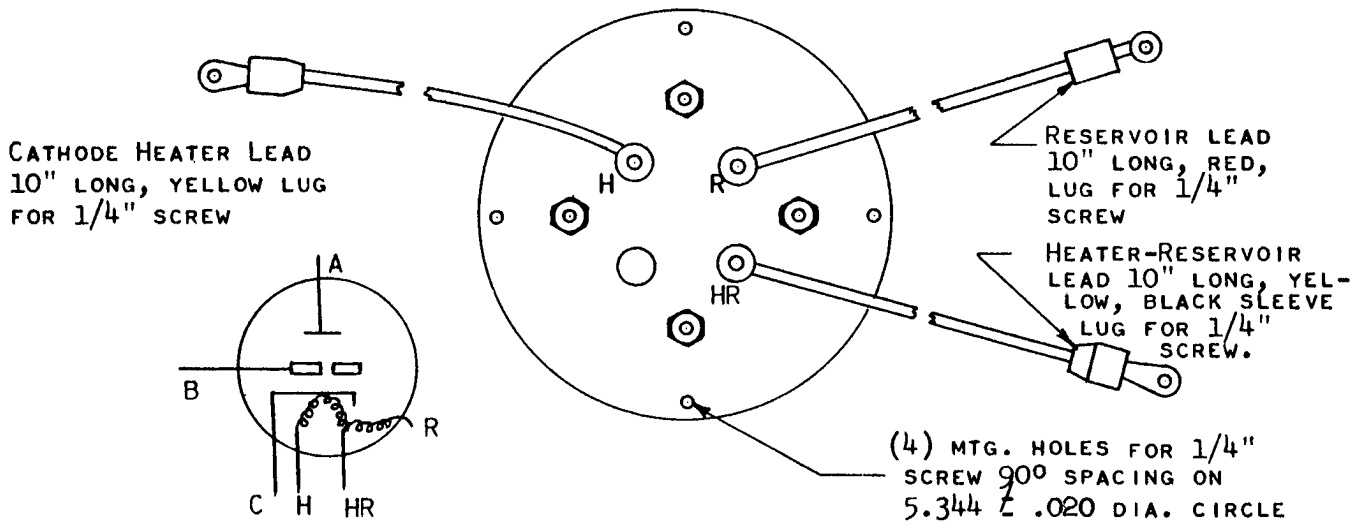

ELECTRON TUBE DEPARTMENT ■ COMPONENTS DIVISION
INTERNATIONAL TELEPHONE AND TELEGRAPH CORPORATION, CLIFTON, NEW JERSEY

KUTHE KU-99 HYDROGEN THYRATRON

DESCRIPTION:

THE KU-99 IS A UNIPOTENTIAL CATHODE, THREE ELEMENT HYDROGEN FILLED THYRATRON DESIGNED FOR NETWORK DISCHARGE SERVICE. IN SUCH SERVICE, IT IS SUITABLE FOR PRODUCING PULSE OUTPUTS OF 55 KW AT AN AVERAGE POWER LEVEL OF MORE THAN 65 WATTS.

THE SPECIAL FEATURES OF THE KU-99 INCLUDE THE HIGH PEAK VOLTAGE AND CURRENT RATINGS, THE COMPACT SIZE, AND A RESERVOIR, CONNECTED INTERNALLY ACROSS THE FILAMENT, WHICH WILL MAINTAIN THE PRESSURE AT THE DESIRED VALUE THROUGHOUT THE USEFUL LIFE OF THE TUBE.

ELECTRICAL DATA, GENERAL:

	Nom.	Min.	Max.	
Heater Voltage	6.3	5.9	6.7	Volts a.c.
Heater Current (At 6.3 Volts)		2.2	2.7	Amperes
Minimum Heating Time			3	Minutes

MECHANICAL DATA, GENERAL:

Mounting Position	Any
Base	Medium, 4 Pin, Low Loss Phenolic, A 4-9
Anode Cap	Small Metal, C1-1
Cooling (Note 1)	
Net Weight	2.5 Ounces
Dimensions	See Outline

RATINGS:

Max. Peak Anode Voltage, Forward	3.0	Kilovolts
Max. Peak Anode Voltage, Inverse (Note 2)	3.0	Kilovolts
Min. Anode Supply Voltage	800	Volts d.c.
Max. Peak Anode Current	35	Amperes
Max. Average Anode Current	45	Milliamperes
Max. RMS Anode Current (Note 3)	1.25	Amperes a.c.
Max. epy x ib x prr	0.3 X 109	
Max. Anode Current Rate of Rise	750	Amperes/uSecond
Peak Trigger Voltage (Note 4)		
Max. Peak Inverse Trigger Voltage	200	Volts
Max. Anode Delay Time (Note 5)	0.6	Microsecond
Max. Anode Delay Time Drift	0.15	Microsecond
Max. Time Jitter (Note 6)	0.02	Microsecond (Initial)
	0.04	uSecond (End of Life)
Ambient Temperature	-50° to +90°	Cent.

TYPICAL OPERATION AS PULSE MODULATOR, DC RESONANT CHARGING:

Peak Network Voltage	3.0	Kilovolts
Pulse Repetition Rate	2500	Pulses/Second
Pulse Length	0.5	Microsecond
Pulse Forming Network Impedance	45.2	Ohms
Trigger Voltage	200	Volts
Peak Power Output - (Resistive Load 92% Zn)	47.2	Kilowatts
Peak Anode Current	35	Amperes
Average Anode Current	.044	Amperes d.c.

Note 1:

Cooling of the anode lead is permissible, but there shall be no air blast directly on the bulb.

Note 2:

The peak inverse voltage should not exceed 1.5 KV during the first 25 microseconds after conduction.

Note 3:

The root mean square anode current shall be computed as the square root of the product of the peak current and the average current.

NOTE 4:

THE VOLTAGE BETWEEN GRID AND CATHODE TERMINALS OF THE SOCKET WITH THE TUBE REMOVED SHOULD HAVE THE FOLLOWING CHARACTERISTICS:

A.	VOLTAGE	175-250 VOLTS
B.	DURATION	2 MICROSECOND (AT 70% POINTS)
C.	SOURCE IMPEDANCE	1500 OHMS (MAX.)
D.	RATE OF RISE	200 VOLTS/MICROSECOND (MIN.)

THE LIMITS OF ANODE TIME DELAY AND ANODE TIME JITTER ARE BASED ON THE MINIMUM TRIGGER. USING THE HIGHEST PERMISSIBLE TRIGGER VOLTAGE AND LOWEST TRIGGER SOURCE IMPEDANCE MATERIALLY REDUCES THESE VALUES BELOW THE LIMITS SPECIFIED.

NOTE 5:

THE TIME OF ANODE DELAY IS MEASURED BETWEEN THE 26 PERCENT POINT ON THE RISING PORTION OF THE UNLOADED GRID VOLTAGE PULSE AND THE POINT AT WHICH EVIDENCE OF ANODE CONDUCTION FIRST APPEARS ON THE LOADED GRID PULSE.

NOTE 6:

TIME JITTER IS MEASURED AT THE 50 PERCENT POINT ON THE ANODE CURRENT PULSE.

ADDITIONAL INFORMATION FOR SPECIFIC APPLICATIONS CAN BE OBTAINED FROM THE -

ELECTRON TUBE APPLICATIONS SECTION
ITT COMPONENTS DIVISION
POST OFFICE BOX 412
CLIFTON, NEW JERSEY

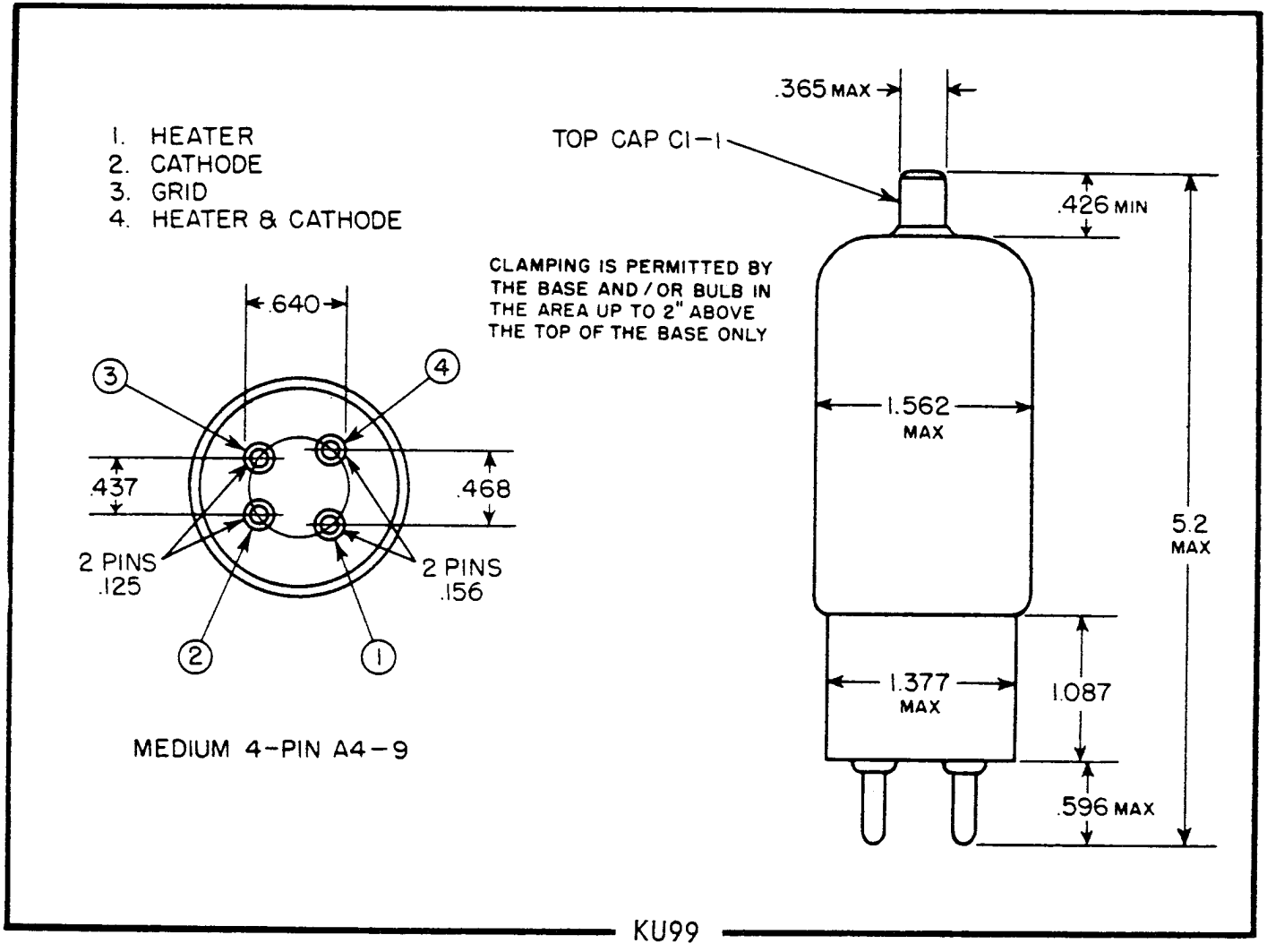
1. HEATER
2. CATHODE
3. GRID
4. HEATER & CATHODE
.640
3
4
.437
.468
2 PINS
.125
2 PINS
.156
2
1
MEDIUM 4-PIN A4-9
CLAMPING IS PERMITTED BY THE BASE AND/OR BULB IN THE AREA UP TO 2" ABOVE THE TOP OF THE BASE ONLY
.365 MAX
TOP CAP C1-1
.426 MIN
1.562 MAX
5.2 MAX
1.377 MAX
1.087
.596 MAX

KU99

DESCRIPTION:

THE KU-99 IS A UNIPOTENTIAL CATHODE, THREE ELEMENT HYDROGEN FILLED THYRATRON DESIGNED FOR NETWORK DISCHARGE SERVICE. IN SUCH SERVICE, IT IS SUITABLE FOR PRODUCING PULSE OUTPUTS OF 55 KW AT AN AVERAGE POWER LEVEL OF MORE THAN 65 WATTS.

THE SPECIAL FEATURES OF THE KU-99 INCLUDE THE HIGH PEAK VOLTAGE AND CURRENT RATINGS, THE COMPACT SIZE, AND A RESERVOIR, CONNECTED INTERNALLY ACROSS THE FILAMENT, WHICH WILL MAINTAIN THE PRESSURE AT THE DESIRED VALUE THROUGHOUT THE USEFUL LIFE OF THE TUBE.

ELECTRICAL DATA, GENERAL:

	NOM.	MIN.	MAX.	
HEATER VOLTAGE	6.3	5.9	6.7	VOLTS A.C.
HEATER CURRENT (AT 6.3 VOLTS)		2.2	2.7	AMPERES
MINIMUM HEATING TIME			3	MINUTES

MECHANICAL DATA, GENERAL:

MOUNTING POSITION	ANY
BASE	MEDIUM, 4 PIN, LOW LOSS PHENOLIC, A 4-9
ANODE CAP	SMALL METAL, C1-1
COOLING (NOTE 1)	
NET WEIGHT	2.5 OUNCES
DIMENSIONS	SEE OUTLINE

RATINGS:

Max. Peak Anode Voltage, Forward	3.0	Kilovolts
Max. Peak Anode Voltage, Inverse (Note 2)	3.0	Kilovolts
Min. Anode Supply Voltage	800	Volts d.c.
Max. Peak Anode Current	35	Amperes
Max. Average Anode Current	45	Milliamperes
Max. RMS Anode Current (Note 3)	1.25	Amperes a.c.
Max. epy x ib x prr	0.3 X 109	
Max. Anode Current Rate of Rise	750	Amperes/uSecond
Peak Trigger Voltage (Note 4)		
Max. Peak Inverse Trigger Voltage	200	Volts
Max. Anode Delay Time (Note 5)	0.6	Microsecond
Max. Anode Delay Time Drift	0.15	Microsecond
Max. Time Jitter (Note 6)	0.02	Microsecond (Initial)
	0.04	uSecond (End of Life)
Ambient Temperature	-50° to +90°	Cent.

TYPICAL OPERATION AS PULSE MODULATOR, DC RESONANT CHARGING:

Peak Network Voltage	3.0	Kilovolts
Pulse Repetition Rate	2500	Pulses/Second
Pulse Length	0.5	Microsecond
Pulse Forming Network Impedance	45.2	Ohms
Trigger Voltage	200	Volts
Peak Power Output - (Resistive Load 92% Zn)	47.2	Kilowatts
Peak Anode Current	35	Amperes
Average Anode Current	.044	Amperes d.c.

Note 1:

Cooling of the anode lead is permissible, but there shall be no air blast directly on the bulb.

Note 2:

The peak inverse voltage should not exceed 1.5 KV during the first 25 microseconds after conduction.

Note 3:

The root mean square anode current shall be computed as the square root of the product of the peak current and the average current.

NOTE 4:

THE VOLTAGE BETWEEN GRID AND CATHODE TERMINALS OF THE SOCKET WITH THE TUBE REMOVED SHOULD HAVE THE FOLLOWING CHARACTERISTICS:

A.	VOLTAGE	175-250 VOLTS
B.	DURATION	2 MICROSECOND (AT 70% POINTS)
C.	SOURCE IMPEDANCE	1500 OHMS (MAX.)
D.	RATE OF RISE	200 VOLTS/MICROSECOND (MIN.)

THE LIMITS OF ANODE TIME DELAY AND ANODE TIME JITTER ARE BASED ON THE MINIMUM TRIGGER. USING THE HIGHEST PERMISSIBLE TRIGGER VOLTAGE AND LOWEST TRIGGER SOURCE IMPEDANCE MATERIALLY REDUCES THESE VALUES BELOW THE LIMITS SPECIFIED.

NOTE 5:

THE TIME OF ANODE DELAY IS MEASURED BETWEEN THE 26 PERCENT POINT ON THE RISING PORTION OF THE UNLOADED GRID VOLTAGE PULSE AND THE POINT AT WHICH EVIDENCE OF ANODE CONDUCTION FIRST APPEARS ON THE LOADED GRID PULSE.

NOTE 6:

TIME JITTER IS MEASURED AT THE 50 PERCENT POINT ON THE ANODE CURRENT PULSE.

ADDITIONAL INFORMATION FOR SPECIFIC APPLICATIONS CAN BE OBTAINED FROM THE -

ELECTRON TUBE APPLICATIONS SECTION
ITT COMPONENTS DIVISION
POST OFFICE BOX 412
CLIFTON, NEW JERSEY

1. HEATER
2. CATHODE
3. GRID
4. HEATER & CATHODE

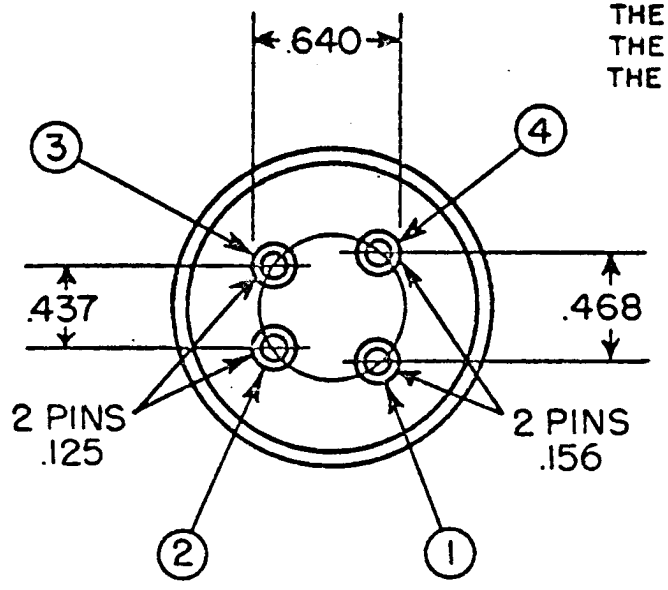

MEDIUM 4-PIN A4-9

CLAMPING IS PERMITTED BY THE BASE AND/OR BULB IN THE AREA UP TO 2" ABOVE THE TOP OF THE BASE ONLY

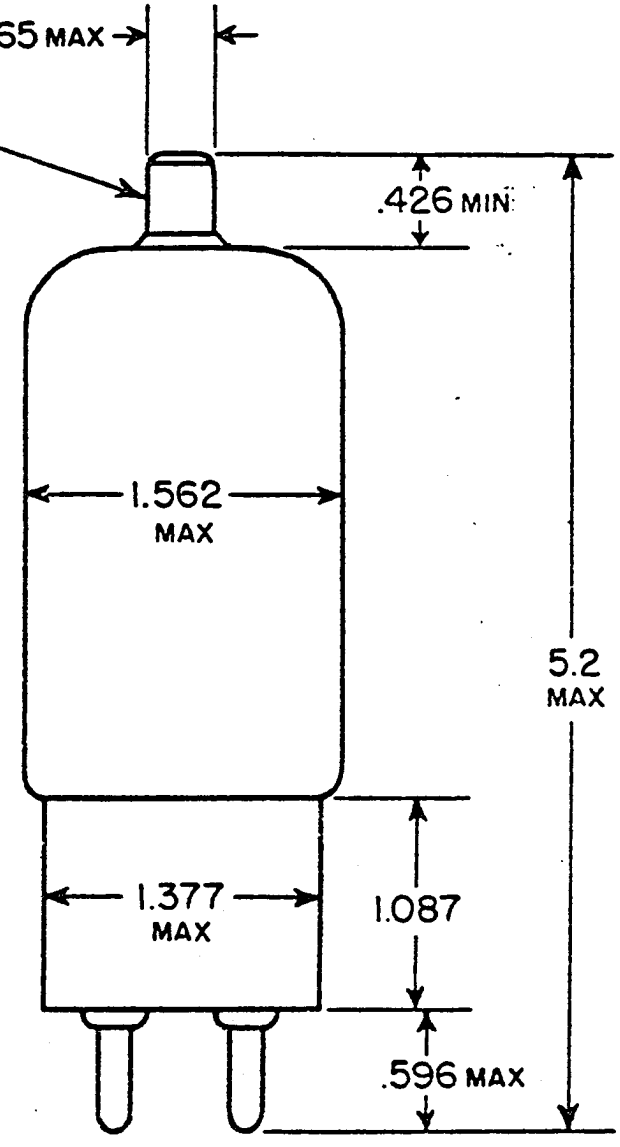

Image Intensifier
25mm, 3-stage

PF253KC

Features

- Fibreoptic input and output faceplates.
- Input faceplate at ground potential.
- Photocathode : S25 (extended - red response).
- Phosphor : P-20 aluminised (yellow-green).
- Internal Power Supply.
- Automatic Brightness Control.
- Ruggedised construction.

Description

The PF253KC is an image intensifier assembly comprising three modules optically coupled in series. Fibre optics are used for the input and output windows on which are formed a photocathode and phosphor screen respectively.

When an image is projected on to the cathode a corresponding inverted and intensified image is produced on the output screen.

Included in the assembly is an oscillator-generator and high voltage multiplier which produced e.h.t. potentials to energise the modules. The assembly is encapsulated in silicone rubber compound and enclosed in a protective plastic housing.

The oscillator has an automatic brightness control (ABC) feature which eliminates phosphor saturation and image burn-in and enables the intensifier to regain useful performance within a few seconds after illumination overload. The dynamic range of the intensifier is also greatly increased as is clearly shown in the transfer characteristic curves on page 3.

The fibre-optic input and output windows have flat surfaces with a numerical aperture of 1.

©1973 International Telephone and Telegraph Corporation

Maximum Ratings (Absolute)

Input voltage, d.c., max.	(V)	7,0
Ambient temperature		
operating maximum continuous	(°C)	35
operating range	(°C)	-54 to +52
non-operating range	(°C)	-54 to +68
Photocathode illuminance, max. average (intermittent flashes of much higher intensity are permissible)	(lux)	$5,0 \times 10^{-3}$

Performance Characteristics at 6,75V d.c. input

Input current, d.c., typical	(mA)	30 (50 max.)
Useful cathode diameter, min.	(mm)	23
Photocathode luminous sensitivity (2 854°K source), min.	(µA/lumen)	175
Photocathode radiant sensitivity		
min. at 800nm	(mA/W)	12
min. at 850nm	(mA/W)	6
Centre resolution, min.	(lp/mm)	28
Edge resolution at 7mm radius, min.	(lp/mm)	25
Paraxial magnification, typical	-	0,84
Distortion at 10mm radius, typical	(%)	18
Luminance gain, min. (Notes 1 and 2)	-	35 000
Equivalent background illumination, max.	(lux)	2×10^{-7}
Screen luminance, max.	(cd/m^2)	500
Screen luminance ratio, max., within area 20mm diameter and concentric with tube axis	-	4:1

Note 1. Luminance gain is defined as $\pi L/E$
where L = luminance (in cd/m^2) in a direction normal to the screen and measured with an eye-corrected photometer having an acceptance angle of 2° or less.

E = cathode illuminance (in lux) produced by a tungsten lamp at a colour temperature of 2 854°K.

Note 2. This is the luminance gain when the intensifier is operated in the linear part of the characteristic, i.e. at cathode illuminances less than 0,01 lux.

Shock and Vibration Conditions

This intensifier will operate in any position and will withstand shock pulses of 75g peak amplitude.

The intensifier is also designed to withstand vibrations at a double amplitude of 2,5mm over the frequency range of 10Hz to 55Hz.

Typical Output versus Input Light Intensity

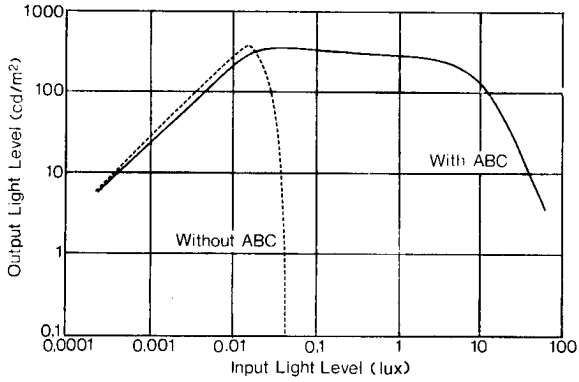

Photocathode Typical Absolute Spectral Response

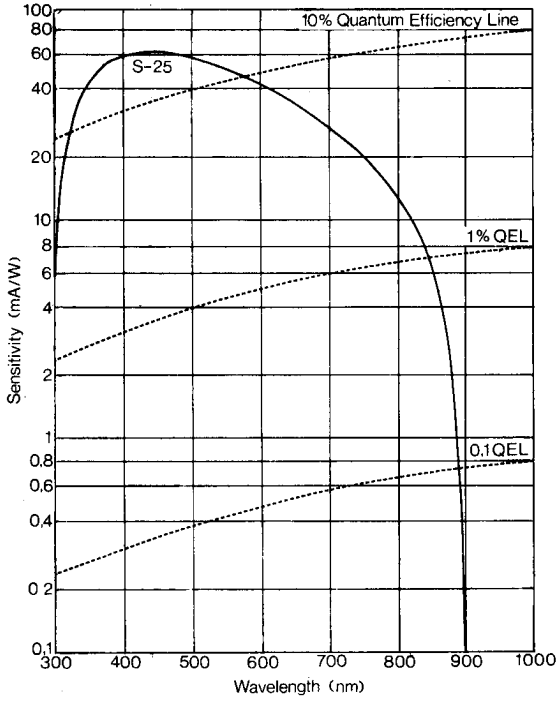

P-20 Phosphor Spectral Output

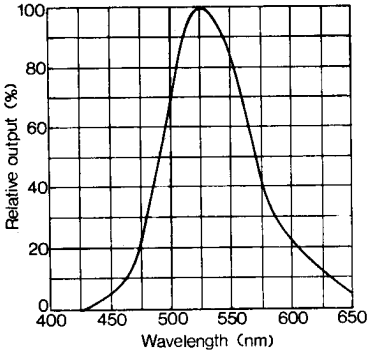

Typical Distortion

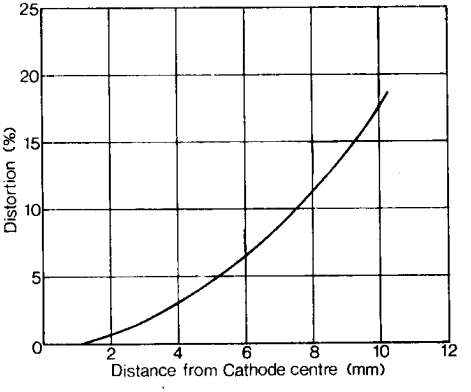

Typical Modulation Transfer Function (MTF)

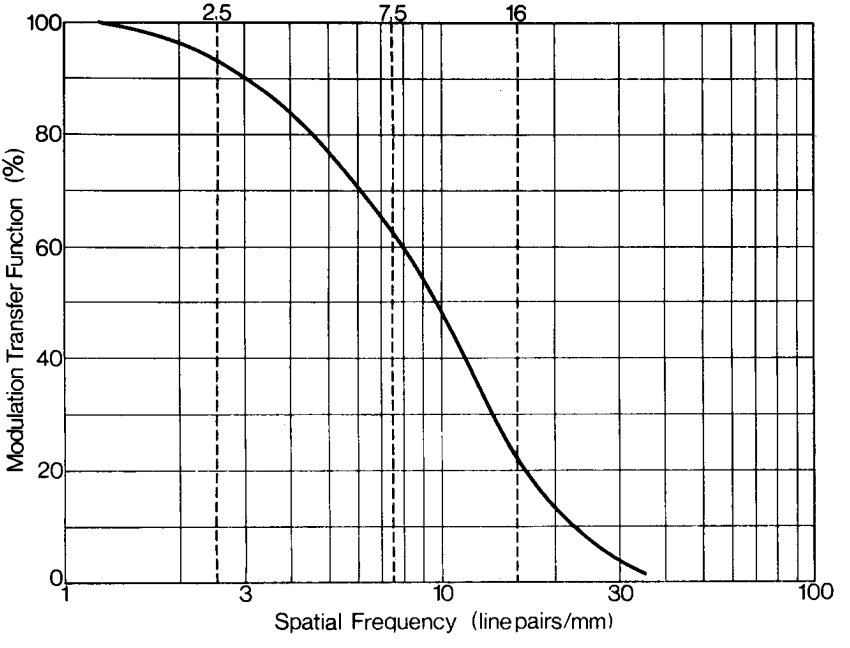

Physical Data

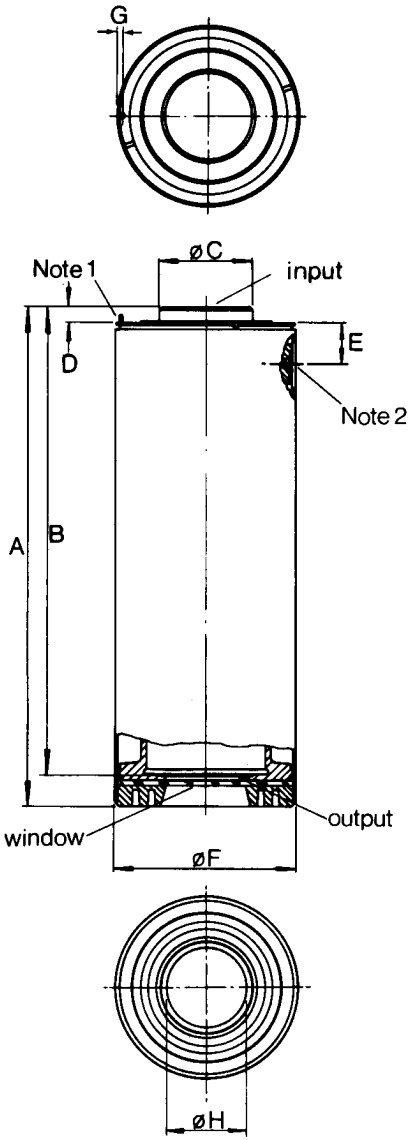

Dimensions

	mm	in.
A	192,2 min.	7,568 min.
	195,2 max.	7,684 max.
B*	180,67 min.	7,113 min.
	182,96 max.	7,203 max.
C	35,4 min.	1,395 min.
	35,7 max.	1,405 max.
D	6,0 min.	0,237 min.
	6,2 max.	0,243 max.
E	15,7 min.	0,617 min.
	16,1 max.	0,638 max.
F	69,6 min.	2,740 min.
	69,9 max.	2,750 max.
G	1,6 min.	0,062 min.
	1,8 max.	0,072 max.
H	33,0 max.	1,300 max.
	*Optical length.	

Notes

1. Locating pin 2,2 to 2,4mm diameter. Height of pin above bearing surface is 2,4 to 2,6mm.
2. Connecting socket hole 2,65 to 2,68mm diameter, minimum depth 6,2mm.

These Components are available from:

ITT Components Group Europe

Standard Telephones and Cables Limited
Valve Product Division
Brixham Road
Paignton, Devon
Telephone: 0803–50762 Telex: 42830

Printed by Lay Press, England

Image Intensifier

40mm , 3–stage

PF403KC

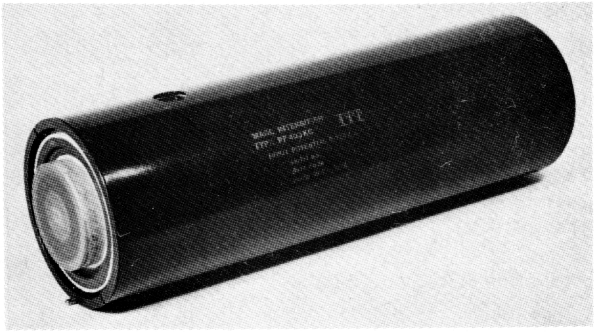

Features

- Phosphor : P-20 aluminised (yellow-green).
- Internal Power Supply.
- Automatic Brightness Control
- Ruggedised construction.
- Fibreoptic input and output faceplates.
- Input faceplate at ground potential.
- Photocathode : S20 (extended - red response).

Description

The PF403KC is an image intensifier assembly comprising three modules optically coupled in series. Fibre optics are used for the input and output windows on which are formed a photocathode and phosphor screen respectively.

When an image is projected on to the cathode a corresponding inverted and intensified image is produced on the output screen.

Included in the assembly is an oscillator-generator and high voltage multiplier which produced e.h.t. potentials to energise the modules. The assembly is encapsulated in silicone rubber compound and enclosed in a protective plastic housing.

The oscillator has an automatic brightness control (ABC) feature which eliminates phosphor saturation and image burn-in and enables the intensifier to regain useful performance within a few seconds after illumination overload. The dynamic range of the intensifier is also greatly increased as is clearly shown in the transfer characteristic curves on page 3.

The fibre-optic input and output windows have flat surfaces with a numerical aperture of 1.

©1973 International Telephone and Telegraph Corporation

Maximum Ratings (Absolute)

Input voltage, d.c., max.	(V)	7,0
Ambient temperature		
operating maximum continuous	(°C)	35
operating range	(°C)	-54 to +52
non-operating range	(°C)	-54 to +68
Photocathode illuminance, max. average (intermittent flashes of much higher intensity are permissible)	(lux)	$5,0 \times 10^{-3}$

Performance Characteristics at 6,75V d.c. input

Input current, d.c., typical	(mA)	30 (50 max.)
Useful cathode diameter, min.	(mm)	38
Photocathode luminous sensitivity (2 854°K source), min.	(µA/lumen)	175
Photocathode radiant sensitivity		
min. at 800nm	(mA/W)	12
min. at 850nm	(mA/W)	6
Centre resolution, min.	(lp/mm)	28
Edge resolution at 11mm radius, min.	(lp/mm)	25
Paraxial magnification, typical	-	0,82
Distortion at 16mm radius, typical	(%)	18
Luminance gain, min. (Notes 1 and 2)	-	35 000
Equivalent background illumination, max.	(lux)	2×10^{-7}
Screen luminance, max.	(cd/m^2)	500
Screen luminance ratio, max., within area 32mm diameter and concentric with tube axis	-	4:1

Note 1. Luminance gain is defined as $\pi L/E$
where L = luminance (in cd/m^2) in a direction normal to the screen and measured with an eye-corrected photometer having an acceptance angle of 2° or less.

E = cathode illuminance (in lux) produced by a tungsten lamp at a colour temperature of 2 854°K.

Note 2. This is the luminance gain when the intensifier is operated in the linear part of the characteristic, i.e. at cathode illuminances less than 0,01 lux.

Shock and Vibration Conditions

This intensifier will operate in any position and will withstand shock pulses of 75g peak amplitude.

The intensifier is also designed to withstand vibrations at a double amplitude of 2,5mm over the frequency range of 10Hz to 55Hz.

Typical Output versus Input Light Intensity

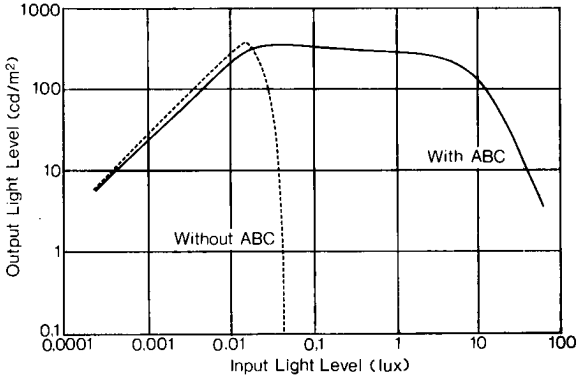

Photocathode Typical Absolute Spectral Response

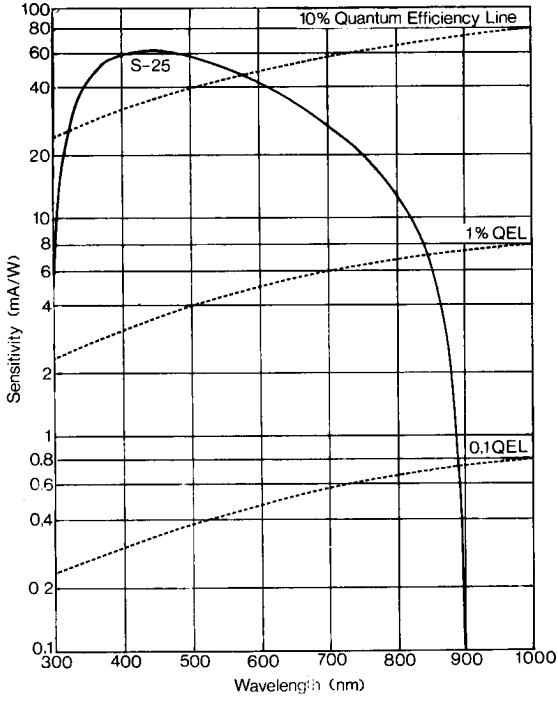

P-20 Phosphor Spectral Output

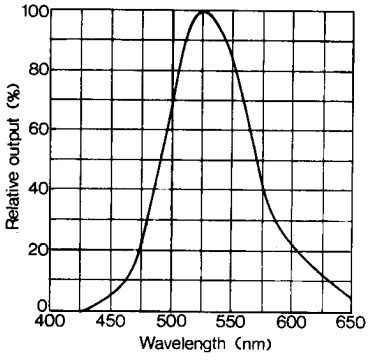

Typical Distortion

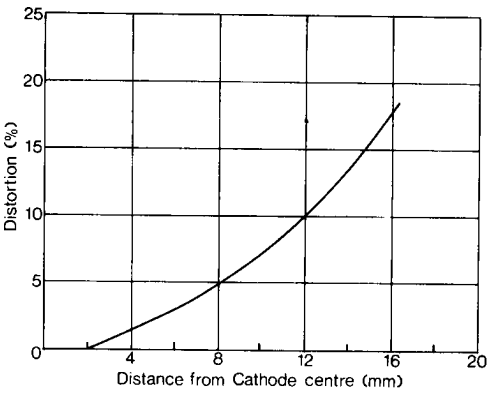

Typical Modulation Transfer Function (MTF)

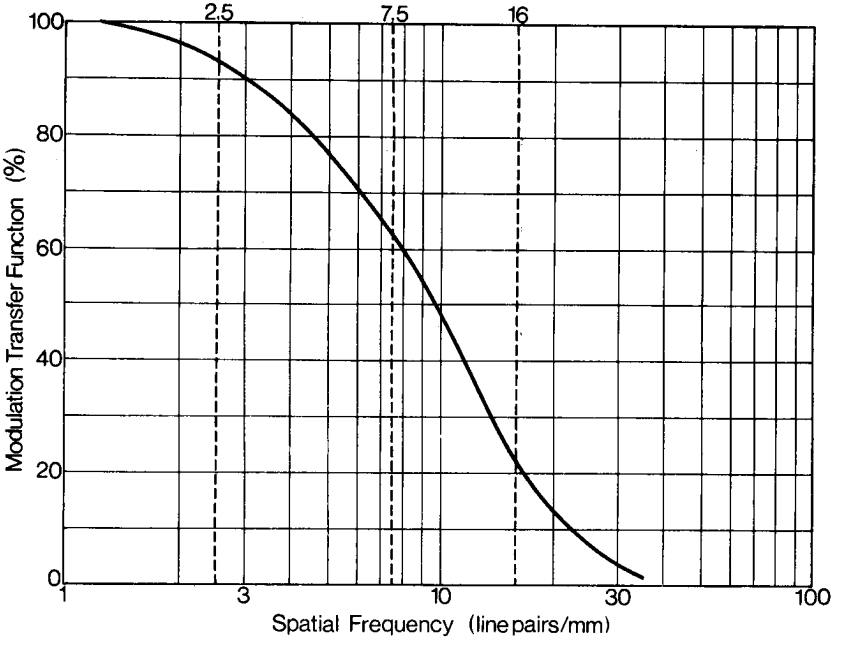

Physical Data

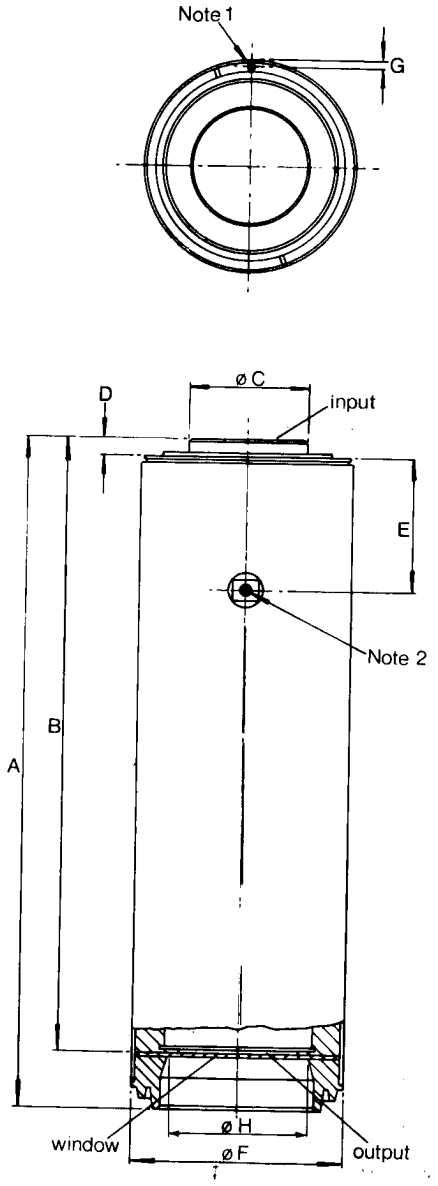

Dimensions

	mm	in.
A	302,3 min.	11,902 min.
	305,6 max.	12,032 max.
B*	278,9 min.	10,980 min.
	282,7 max.	11,130 max.
C	53,2 min.	2,095 min.
	53,5 max.	2,105 max.
D	6,0 min.	0,237 min.
	6,2 max.	0,243 max.
E	60,2 min.	2,370 min.
	61,0 max.	2,400 max.
F	94,9 min.	3,735 min.
	95,3 max.	3,750 max.
G	2,1 min.	0,082 min.
	2,3 max.	0,092 max.
H	63,7 min.	2,508 min.
	64,8 max.	2,551 max.

*B = optical length.

Notes

1. Locating pin, diameter 3,0mm (0,120in.) min.: 3,1mm (0,123in.) max.
   Height of pin above bearing surface 5,3mm to 5,5mm.
2. Connecting socket hole, diameter 2,65 to 2,68mm
   Minimum depth of socket 6,22mm.

These Components are available from:

ITT Components Group Europe

Standard Telephones and Cables Limited
Valve Product Division
Brixham Road
Paignton, Devon
Telephone: 0803–50762 Telex: 42830

Printed by Lay Press, England

engineering TUBE DATA

X-282
TRAVELING
WAVE TUBE

ITT Components Division

TENTATIVE

DESCRIPTION:

THE X-282 IS A 10 WATT CW TRAVELING WAVE AMPLIFIER TUBE IN THE 4.0 TO 8.0 FREQUENCY RANGE AND HAVING 25 DB GAIN WHEN OPERATED AS A LOW-LEVEL AMPLIFIER. IT IS CONSTRUCTED IN A RUGGED METAL ENVELOPE WITH A HELIX-TYPE SLOW-WAVE STRUCTURE. THE INTEGRAL MATCHING CIRCUIT IS IN 50 OHM COAXIAL LINE AND IS PROVIDED WITH FEMALE TNC CONNECTORS. THE TUBE IS SELF-ALIGNING IN THE EXTERNAL SOLENOID, WHICH IS REQUIRED TO PROVIDE A UNIFORM MAGNETIC FIELD. A CONVERGENT BEAM GUN AND OXIDE COATED CATHODE ARE USED.

ELECTRICAL INFORMATION:

HEATER VOLTAGE	6.3 (±5%)	VOLTS
HEATER CURRENT	1.5	AMPERES
MAXIMUM FREQUENCY	8.0	
MINIMUM FREQUENCY	4.0	
MINIMUM COLD TRANSMISSION LOSS	55	DB
CAPACITANCE		
CONTROL ELECTRODE TO ALL ELEMENTS	15	UUF

ELECTRICAL RATINGS, ABSOLUTE VALUES

MAXIMUM ANODE VOLTAGE (NOTE 1)	3000	VOLTS
MAXIMUM HELIX CURRENT (NOTE 2)	2	MA
MAXIMUM COLLECTOR DISSIPATION (BEAM POWER) (NOTE 3)	196	WATTS
MAXIMUM POSITIVE CONTROL ELECTRODE VOLTAGE	0	VOLTS

MECHANICAL:

TYPE OF CATHODE	OXIDE COATED UNIPOTENTIAL
GUN CONNECTIONS	FLYING LEADS
R-F CONNECTIONS	FEMALE TNC
MAGNETIC FIELD STRENGTH	1200 GAUSS
MOUNTING POSITION	ANY
WEIGHT (TUBE ONLY)	14 OUNCES
TYPE OF COOLING (NOTE 4)	WATER OR AIR

ITT ELECTRON TUBE DEPARTMENT
COMPONENTS DIVISION
INTERNATIONAL TELEPHONE AND TELEGRAPH CORPORATION
P. O. BOX 412, CLIFTON, NEW JERSEY

10-60

TYPICAL OPERATION:

AS POWER AMPLIFIER		
FREQUENCY	6	
ANODE VOLTAGE	2600	VOLTS
ANODE CURRENT	55	MA
HELIX CURRENT	1.0	MA
CONTROL ELECTRODE VOLTAGE	0	VOLTS
POWER OUTPUT	10	WATTS
GAIN	28	DB
DUTY	1.0	
AS LOW LEVEL AMPLIFIER		
FREQUENCY	6	
ANODE VOLTAGE	2550	VOLTS
ANODE CURRENT	53	MA
HELIX CURRENT	1.0	MA
CONTROL ELECTRODE VOLTAGE	0	VOLTS
POWER OUTPUT	300	MW
GAIN	33	DB
DUTY	1.0	

NOTE 1: ALL VOLTAGES SHOWN ARE WITH RESPECT TO CATHODE. ANODE AND COLLECTOR ARE CONNECTED INTERNALLY TO THE SHELL, AND THE OUTER COAX CONDUCTOR OF THE R-F CONNECTIONS IS ALSO AT SHELL POTENTIAL. THE HELIX IS CONNECTED TO THE CENTER CONDUCTOR OF THE COAX LINE AND A D-C CONNECTION TO THE HELIX MUST BE PROVIDED EXTERNALLY IN THE R-F CIRCUITRY.

NOTE 2: THE HELIX CURRENT SHOULD BE MINIMIZED AND MUST BE LESS THAN THE MAXIMUM RATING. IT IS DESIRABLE TO MONITOR THIS CURRENT DURING OPERATION AND TO PROVIDE OVERLOAD PROTECTION.

NOTE 3: THE BEAM VOLTAGE SHOULD BE APPLIED TO THE TUBE ONLY AFTER THE MAGNETIC FIELD IS TURNED ON AND WATER OR AIR IS FLOWING THROUGH THE COLLECTOR COOLING JACKET.

NOTE 4: COOLING METHOD DEPENDS ON TYPE OF COLLECTOR COOLING JACKET USED.

ADDITIONAL INFORMATION FOR SPECIFIC APPLICATIONS CAN BE OBTAINED FROM THE:

ELECTRON TUBE APPLICATIONS SECTION
ITT COMPONENTS DIVISION
POST OFFICE BOX 7065
ROANOKE, VIRGINIA

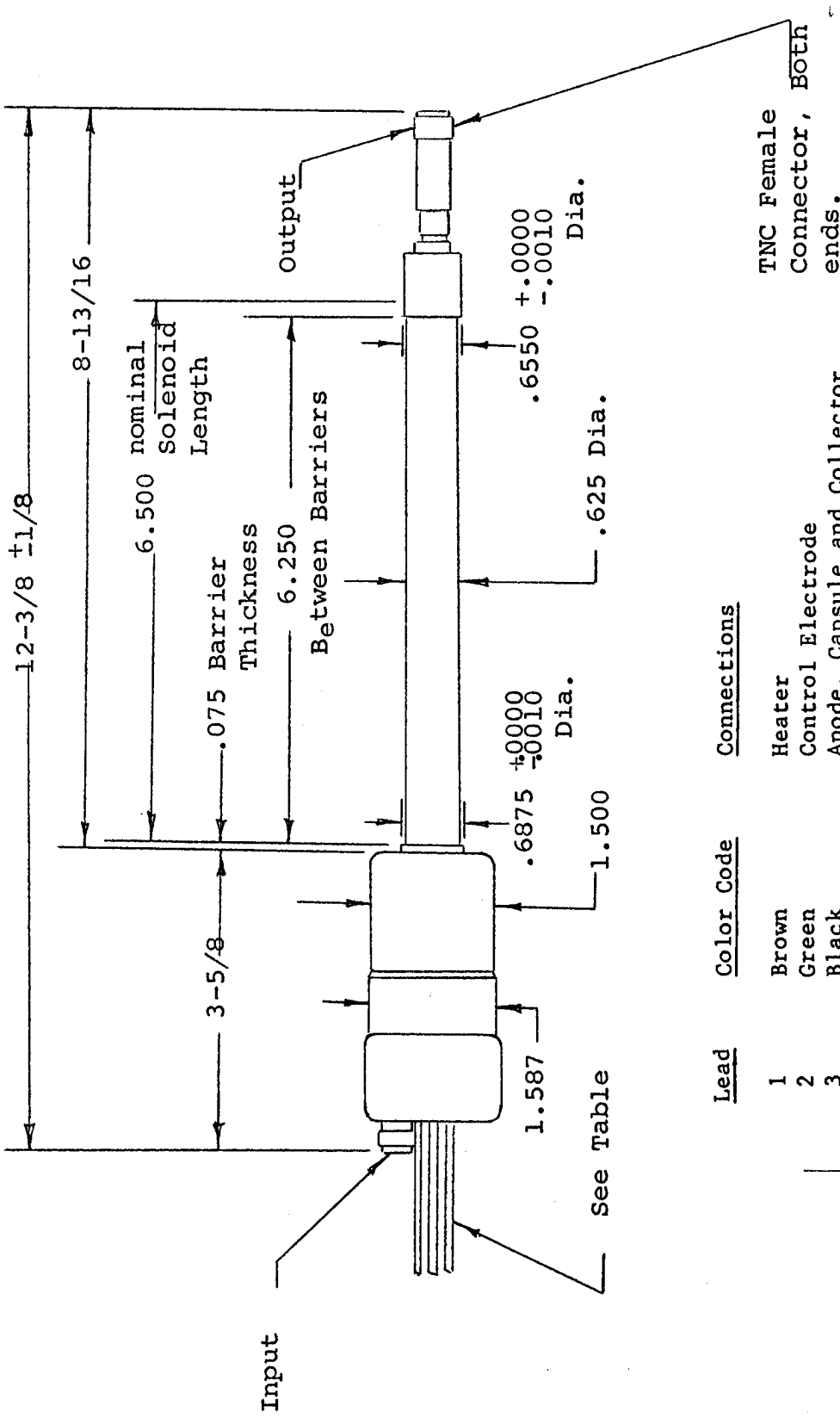

Lead	Color Code	Connections
1	Brown	Heater
2	Green	Control Electrode
3	Black	Anode, Capsule and Collector
4	Yellow	Heater-Cathode

Flexible Leads 12" Min. Length

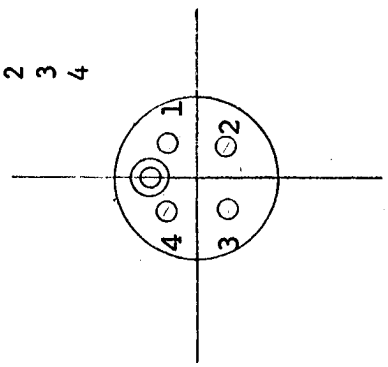

OUTLINE - X-282 TRAVELING WAVE TUBE

ELECTRON TUBE DEPARTMENT
ITT COMPONENTS DIVISION
INTERNATIONAL TELEPHONE AND TELEGRAPH CORPORATION
P. O. BOX 412, CLIFTON, NEW JERSEY

OPERATING INSTRUCTIONS FOR THE X-282 TRAVELING WAVE TUBE

THE X-282 IS A 10 WATT CW TRAVELING WAVE TUBE OPERATING OVER THE BAND OF 4 TO 8 KMC. IT REQUIRES A MAGNETIC FIELD OF 1200 GAUSS FOR PROPER FOCUSING. BASIC POWER REQUIREMENTS ARE 70 MA AT 2800 V AND A 50 VOLT BIAS SUPPLY, AS WELL AS 6.3 V AT 2.2 AMPS FOR THE HEATER.

WHEN PLACING THE X-282 IN OPERATION FOR THE FIRST TIME, THE FOLLOWING PROCEDURE SHOULD BE FOLLOWED:

1. MAKE A VISUAL INSPECTION OF THE TUBE TO CHECK FOR LOOSE CONNECTIONS OR OTHER MECHANICAL DEFECTS.

2. PLACE THE TUBE IN THE PROPER SOLENOID AND MAKE CONNECTIONS TO THE TUBE AND SOLENOID. OBSERVE COLOR-CODING OF THE TUBE LEADS AND POLARITY MARKING ON THE SOLENOID.

3. APPLY COOLING TO THE SOLENOID AND TO COLLECTOR.

4. APPLY THE FOLLOWING VOLTAGES IN THE FOLLOWING ORDER:

   4.1 HEATER VOLTAGE (6.3 VOLTS).

   4.2 SOLENOID VOLTAGE (ADJUST SOLENOID CURRENT TO YIELD 1200 GAUSS).

   4.3 CONTROL ELECTRODE VOLTAGE (APPLY BIAS VOLTAGE SPECIFIED ON DATA SHEET SUPPLIED WITH TUBE.)

   4.4 CATHODE VOLTAGE (ADJUST SLOWLY TO THE VALUE INDICATED ON THE DATA SHEET; USUALLY ABOUT MINUS 2700 VOLTS WITH RESPECT TO THE SHELL. AT ALL TIMES MONITOR HELIX CURRENT AND OBSERVE THE 2.0 MA MAXIMUM LIMIT.)

5. R.F. INPUT SHOULD BE LIMITED TO 200 MW.

6. THE CATHODE VOLTAGE MAY BE OPTIMIZED FOR OPTIMUM POWER OUTPUT AT THE DESIRED FREQUENCIES.

THE FOLLOWING PRECAUTIONS SHOULD BE TAKEN WHEN OPERATING THE TRAVELING WAVE TUBE:

1. NEVER OPERATE THE X-282 WITHOUT PROPER MAGNETIC FIELD. BE SURE SUFFICIENT COOLING IS SUPPLIED TO TUBE AND SOLENOID.

2. NEVER OPERATE THE X-282 WITH HELIX CURRENT IN EXCESS OF 2.0 MA. UNDER MOST CONDITIONS HELIX CURRENT WILL BE 1.0 MA OR LESS. IT IS IMPORTANT THAT HELIX OVERLOAD PROTECTION BE PROVIDED.

3. BE SURE COAXIAL CABLES TO BE CONNECTED TO THE TUBE INPUT AND OUTPUT CONNECTORS ARE ASSEMBLED CORRECTLY. IF THE INNER CONDUCTOR OF THE CABLE CONNECTOR IS TOO LONG, PRESSURE WILL BE APPLIED TO A CERAMIC BEAD, WHICH MAY CAUSE DAMAGE TO THE TUBE. IF IT IS TOO SHORT, A POOR CONNECTION WILL RESULT CAUSING POOR R.F. PERFORMANCE.

THE ATTACHED SCHEMATIC IS A SUGGESTED METHOD OF CONNECTING THE X-282 AND SHOWS THE LOCATION OF PROTECTION CIRCUITS AND METER POLARITY.

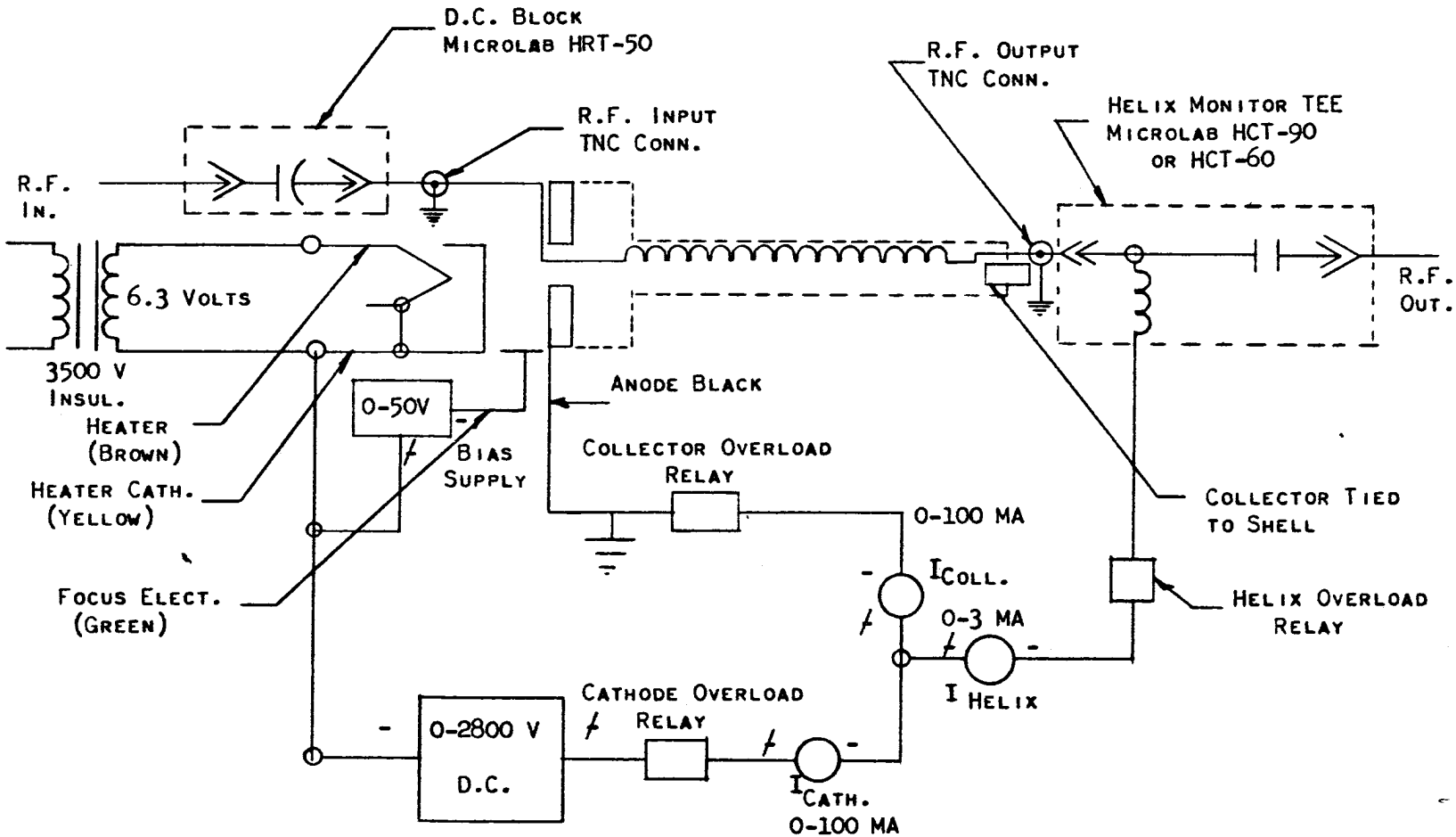

Notes:

1. All overloads operate to disconnect high voltage supply.
2. Helix Monitor and D.C. block to be supplied by user.

BASIC SUPPLY AND METERING REQUIREMENTS FOR X-282 TWT AMPLIFIER

ELECTRON TUBE DEPARTMENT ■ COMPONENTS DIVISION
INTERNATIONAL TELEPHONE AND TELEGRAPH CORPORATION, CLIFTON, NEW JERSEY

X-354 TRAVELING WAVE TUBE

TENTATIVE

DESCRIPTION:

THE X-354 IS A SUPER-HIGH-FREQUENCY, MEDIUM-POWER TRAVELING WAVE AMPLIFIER TUBE EMPLOYING A HELICAL WAVE PROPAGATING STRUCTURE. THE TUBE IS DESIGNED FOR USE AS A CONTINUOUS WAVE AMPLIFIER IN THE FREQUENCY RANGE OF 8 TO 12 KILOMEGACYCLES PER SECOND. IT IS OF ALL-METAL SHELL CONSTRUCTION, AND TYPE TNC FEMALE COAXIAL LINE R-F CONNECTORS ARE PROVIDED AS AN INTEGRAL PART OF THE STRUCTURE. THE TUBE IS SELF-ALIGNING IN THE PERMANENT MAGNET WHICH PROVIDES THE MAGNETIC FIELD REQUIRED TO DEFINE THE PATH OF THE ELECTRON BEAM.

ELECTRICAL DATA:

HEATER, FOR OXIDE-COATED, UNIPOTENTIAL CATHODE		
VOLTAGE	6.3	VOLTS
CURRENT	2.0	AMPERES
FREQUENCY	8 TO 12	KMC
GAIN (SMALL SIGNAL) (NOTE 1)	33	DB
GAIN (AT RATED POWER OUT) (NOTE 1)	25	DB
POWER OUTPUT (NOTE 1)	5	WATTS

MECHANICAL DATA:

MOUNT		SPECIAL
MOUNTING POSITION		ANY
BASE		MOULDED RUBBER FLEXIBLE LEADS
OVERALL TUBE LENGTH	12	INCHES
R-F CIRCUIT CONNECTORS		TNC FEMALE
TYPE OF COOLING		AIR OR WATER COOLED COLLECTOR

MAXIMUM RATINGS:

Helix Voltage with Respect to Ground (Externally)	0	Volts
Anode Voltage with Respect to Ground	0	Volts
Collector Voltage with Respect to Ground	0	Volts
Cathode Voltage with Respect to Ground	-4000	Volts
Cathode Current	60	ma
Collector Current	60	ma
Helix Current	5	ma
Focus Electrode Voltage with Respect to Cathode	-100	Volts
Beam Duty Cycle	100	Percent

Note 1: Minimum performance over the frequency band of 8 to 12 kmc with operating conditions optimized near the center of the band.

Additional information for specific applications can be obtained from the:

Electron Tube Applications Section
ITT Components Division
Post Office Box 7065
Roanoke, Virginia

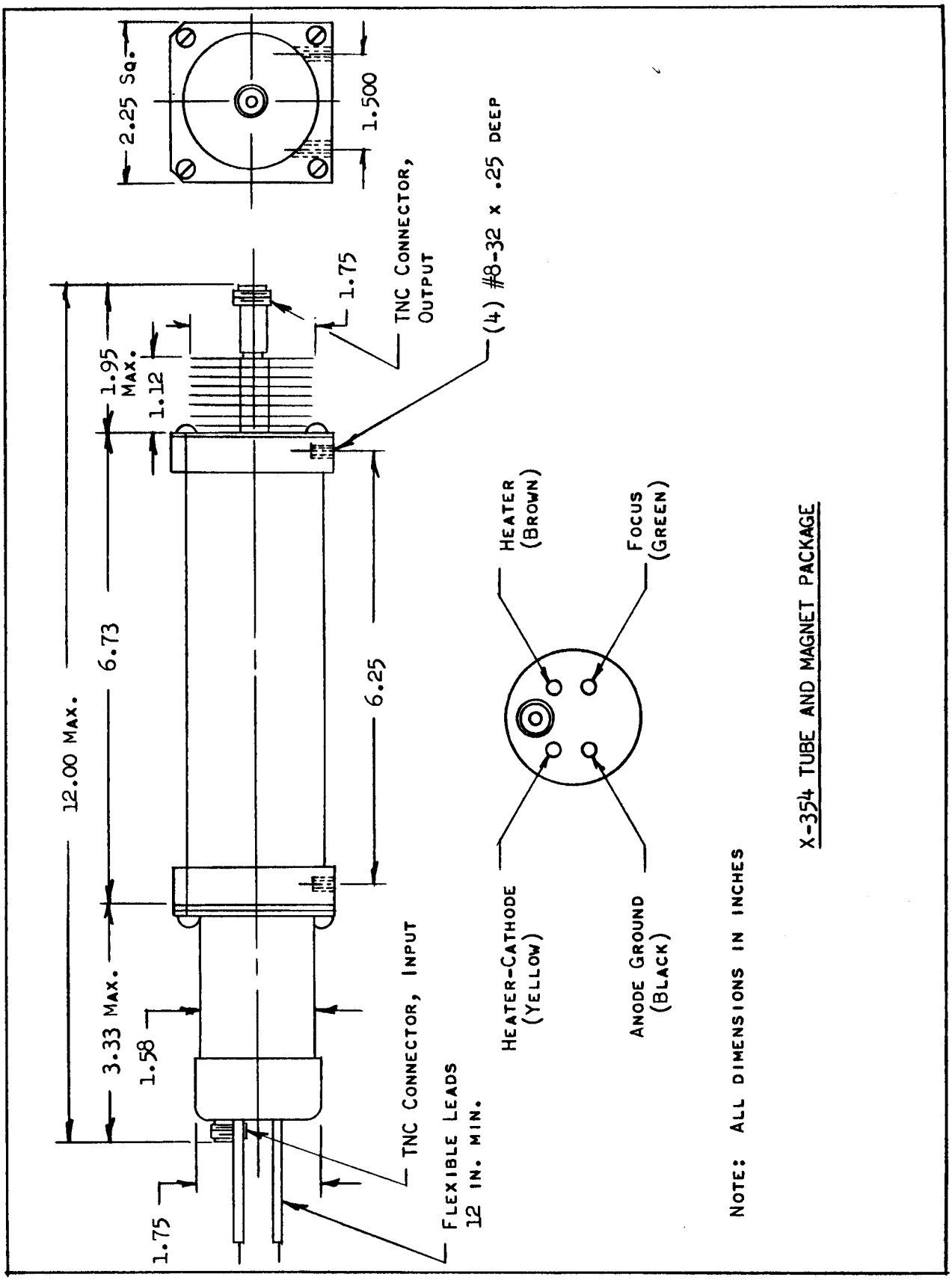

X-354 TUBE AND MAGNET PACKAGE

NOTE: ALL DIMENSIONS IN INCHES

ELECTRON TUBE DEPARTMENT ■ COMPONENTS DIVISION
INTERNATIONAL TELEPHONE AND TELEGRAPH CORPORATION, CLIFTON, NEW JERSEY

X-354C TRAVELING WAVE TUBE

TENTATIVE

DESCRIPTION:

THE X-354C IS A SUPER-HIGH-FREQUENCY, MEDIUM-POWER TRAVELING WAVE AMPLIFIER TUBE EMPLOYING A HELICAL-WAVE-PROPAGATING STRUCTURE. THE TUBE IS DESIGNED FOR USE AS A CONTINUOUS-WAVE AMPLIFIER IN THE FREQUENCY RANGE OF 8 TO 12 KILOMEGACYCLES PER SECOND.

THE X-354C IS OF ALL-METAL SHELL CONSTRUCTION, AND TYPE TNC GRFF-184 COAXIAL-LINE R-F CONNECTORS ARE PROVIDED AS AN INTEGRAL PART OF THE STRUCTURE.

THE TUBE IS SELF-ALIGNING IN THE PERMANENT MAGNET WHICH PROVIDES THE MAGNETIC FIELD REQUIRED TO DEFINE THE PATH OF THE ELECTRON BEAM.

ELECTRICAL DATA:

HEATER, FOR OXIDE-COATED, UNIPOTENTIAL CATHODE		
VOLTAGE	6.3	VOLTS
CURRENT	1.5	AMPERES
FREQUENCY	8 TO 12	KMC
GAIN - SMALL SIGNAL (NOTE 1)	36	DB
GAIN - AT RATED POWER OUT (NOTE 1)	33	DB
POWER OUTPUT (NOTE 1)	2	WATTS

MECHANICAL DATA:

MOUNT		SPECIAL
MOUNTING POSITION		ANY
BASE		MOULDED RUBBER FLEXIBLE LEADS
OVER-ALL TUBE LENGTH	12	INCHES
R-F CIRCUIT CONNECTORS		TNC FEMALE
TYPE OF COOLING		AIR OR WATER COOLED COLLECTOR

MAXIMUM RATINGS:

Helix Voltage with Respect to Ground (Externally)	0	Volts
Anode Voltage with Respect to Ground	0	Volts
Collector Voltage with Respect to Ground	0	Volts
Cathode Voltage with Respect to Ground	-3200	Volts
Cathode Current	38	ma
Collector Current	38	ma
Helix Current	3.5	ma
Grid Voltage with Respect to Cathode	-100	Volts
Beam Duty Cycle	100	Per Cent

Note 1:

Minimum performance over the frequency band of 8 to 12 KMC with operating conditions optimized near the center of the band.

Additional information for specific applications can be obtained from the:

Electron Tube Applications Section
ITT Components Division
Post Office Box 412
Clifton, New Jersey

ELECTRON TUBE DEPARTMENT ■ COMPONENTS DIVISION
INTERNATIONAL TELEPHONE AND TELEGRAPH CORPORATION, CLIFTON, NEW JERSEY

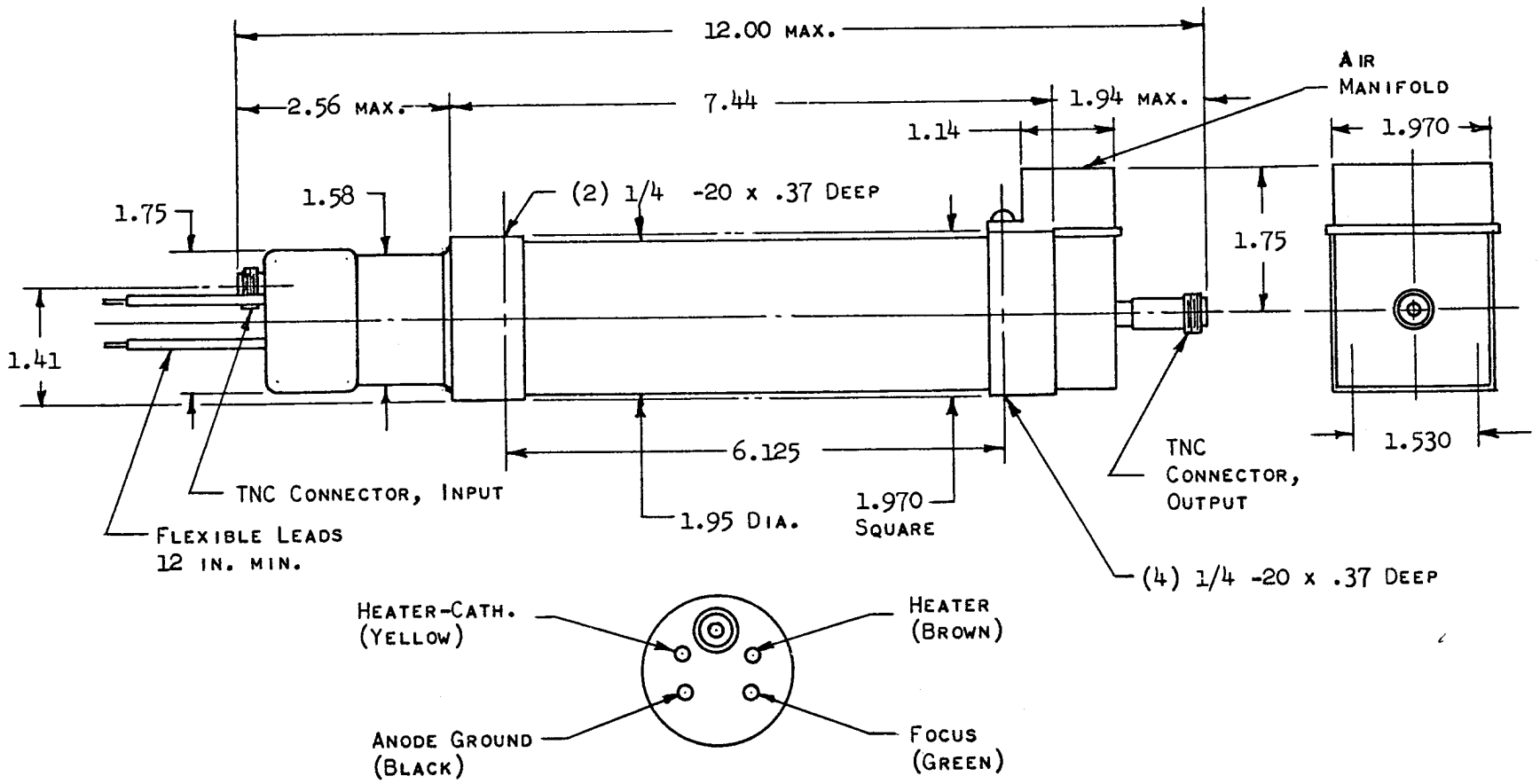

X-354C TUBE AND MAGNET PACKAGE

TENTATIVE

DESCRIPTION:

THE X-368 IS A SUPER-HIGH-FREQUENCY, INTERMEDIATE-POWER, TRAVELING WAVE AMPLIFIER TUBE, EMPLOYING A HELICAL WAVE PROPAGATING STRUCTURE. THE TUBE IS DESIGNED FOR USE AS A CONTINUOUS WAVE AMPLIFIER IN THE FREQUENCY RANGE OF 8 TO 12 KILOMEGACYCLES PER SECOND. IT IS OF ALL-METAL SHELL CONSTRUCTION, AND TYPE TNC FEMALE COAXIAL LINE R-F CONNECTORS ARE PROVIDED AS AN INTEGRAL PART OF THE STRUCTURE. THE TUBE IS SELF-ALIGNING IN THE PERMANENT MAGNET WHICH PROVIDES THE MAGNETIC FIELD REQUIRED TO DEFINE THE PATH OF THE ELECTRON BEAM.

ELECTRICAL DATA:

HEATER, FOR OXIDE-COATED, UNIPOTENTIAL CATHODE		
VOLTAGE	6.3	VOLTS
CURRENT	0.85	AMPERE
FREQUENCY	8 TO 12	KMC
GAIN (SMALL SIGNAL)(NOTE 1)	35	DB
GAIN (AT RATED POWER OUT) (NOTE 1)	30	DB
POWER OUTPUT (NOTE 1)	50	MW
CAPACITANCE (CONTROL ELECTRODE TO ALL ELEMENTS)	20	UUFD

MECHANICAL DATA:

MOUNT		SPECIAL
MOUNTING POSITION		ANY
BASE		MOULDED RUBBER FLEXIBLE LEADS
SIZE	11 1/4 x 2 1/4 x 2 1/4	INCHES
R-F CIRCUIT CONNECTORS		TNC FEMALE
TYPE OF COOLING		CONDUCTION

MAXIMUM RATINGS:

Helix Voltage with Respect to Ground (externally)	0	Volts
Anode Voltage with Respect to Ground	0	Volts
Collector Voltage with Respect to Ground	0	Volts
Cathode Voltage with Respect to Ground	-1600	Volts
Cathode Current	8	ma
Collector Current	8	ma
Helix Current	2	ma
Focus Electrode Voltage with Respect to Cathode	-100	Volts
Beam Duty Cycle	100	Percent

Note 1: Minimum performance over the frequency band of 8 to 12 kmc with operating conditions optimized near the center of the band.

Additional information for specific applications can be obtained from the:

Electron Tube Applications Section
ITT Components Division
Post Office Box 412
Clifton, New Jersey

TYPICAL PERFORMANCE OF THE X-368 TRAVELING WAVE TUBE

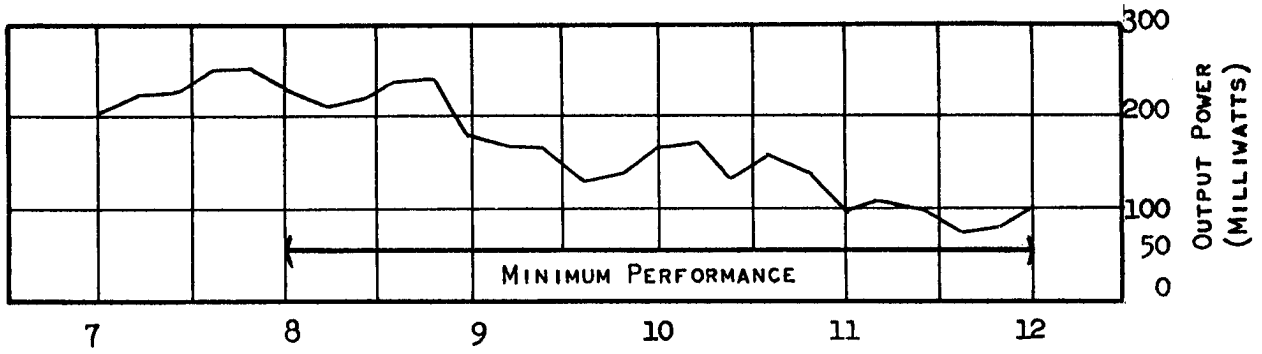

SATURATED OUTPUT POWER VS. FREQUENCY

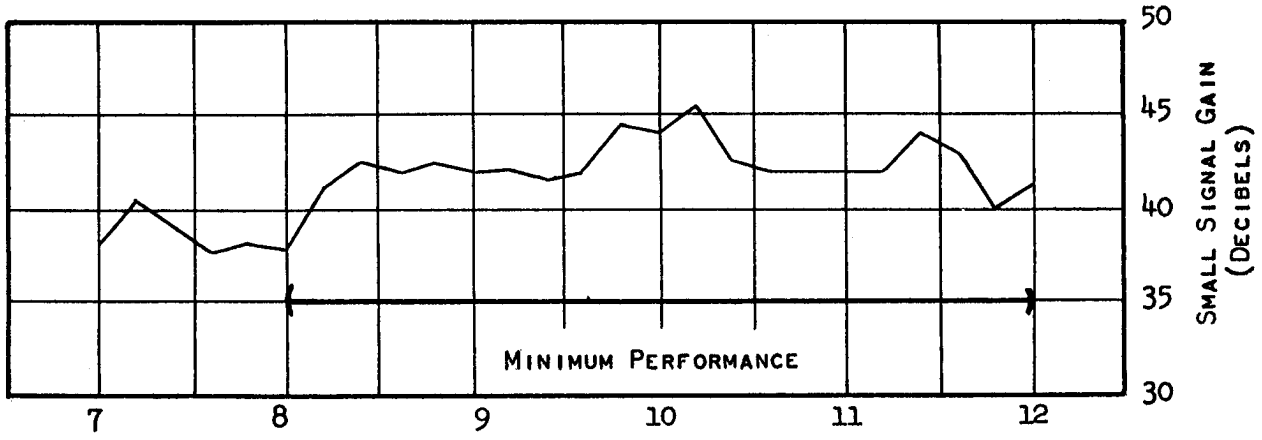

SMALL SIGNAL GAIN VS. FREQUENCY

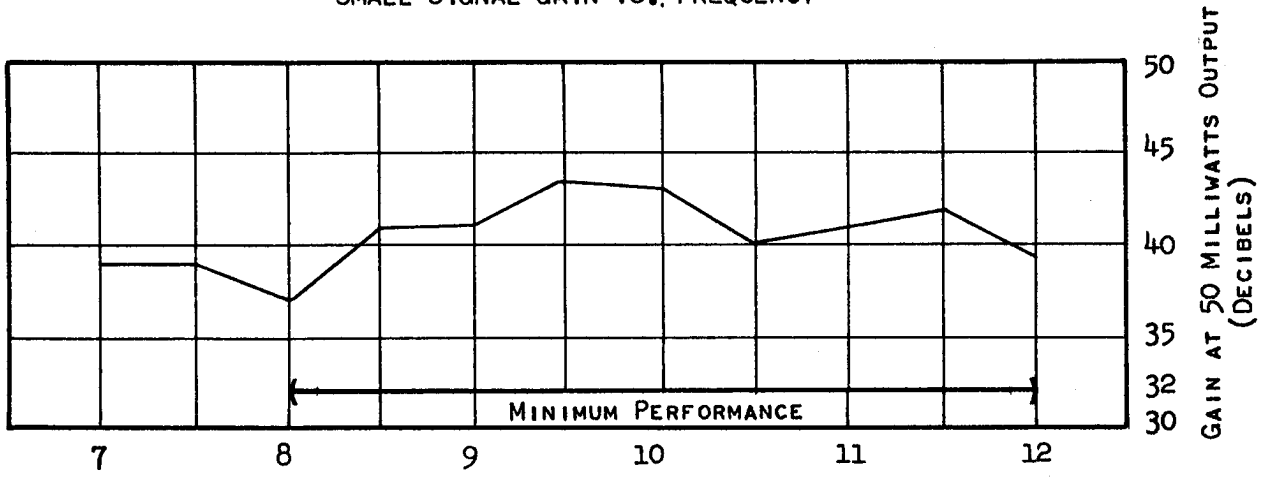

GAIN AT 50 MILLIWATTS OUTPUT POWER VS. FREQUENCY

TYPICAL PERFORMANCE OF THE X-368 TRAVELING WAVE TUBE

OUTPUT POWER VS. INPUT POWER

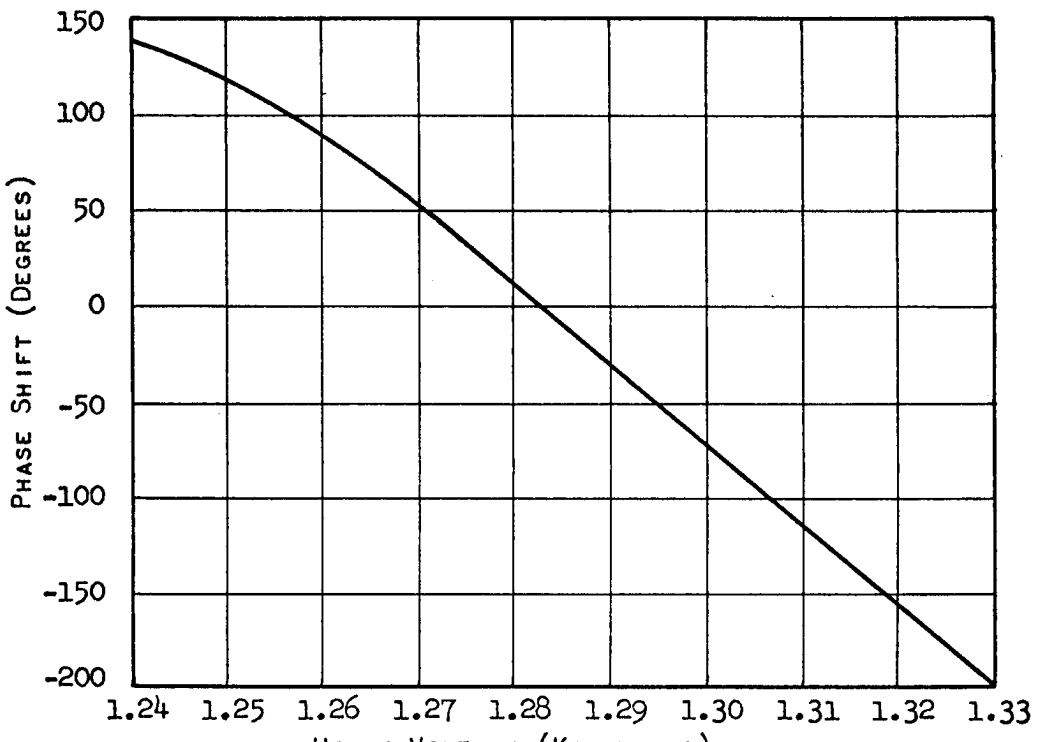

PHASE SHIFT VS. HELIX VOLTAGE

ITT
ELECTRON TUBE DEPARTMENT ■ COMPONENTS DIVISION
INTERNATIONAL TELEPHONE AND TELEGRAPH CORPORATION, CLIFTON, NEW JERSEY

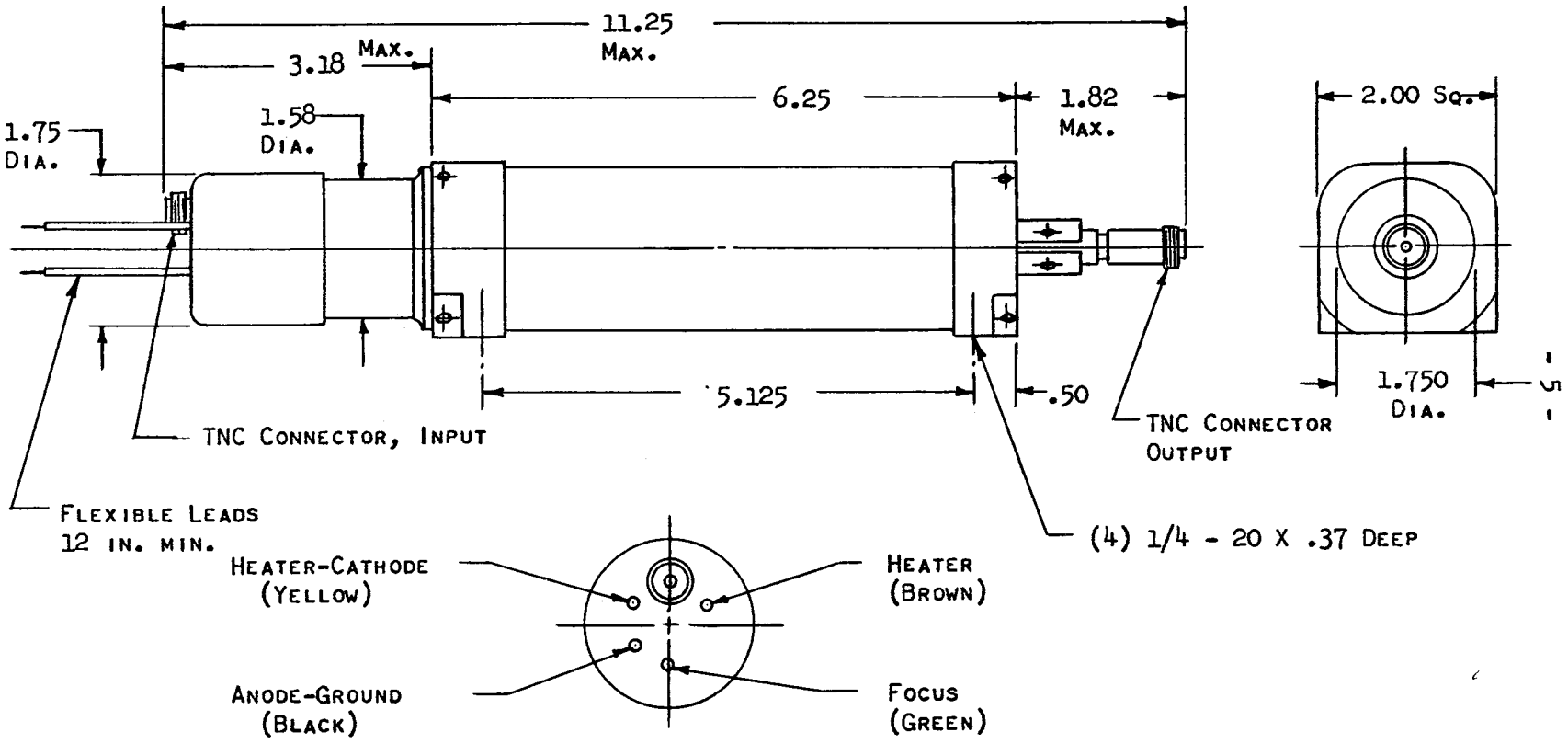

X-368 TUBE AND MAGNET PACKAGE

(NOTE: SUPERSEDES OUTLINE DATED 10-60)

TENTATIVE

DESCRIPTION:

THE X-370 IS A SUPER-HIGH-FREQUENCY TRAVELING WAVE AMPLIFIER TUBE, EMPLOYING A HELICAL WAVE PROPAGATING STRUCTURE. THE TUBE IS DESIGNED FOR USE AS AN R-F AMPLIFIER IN THE FREQUENCY RANGE OF 4000 TO 8000 MEGACYCLES PER SECOND. IT IS OF ALL-METAL SHELL CONSTRUCTION, AND TYPE TNC COAXIAL LINE R-F CONNECTORS ARE PROVIDED AS AN INTEGRAL PART OF THE STRUCTURE. THE TUBE IS SELF-ALIGNING IN A PERMANENT MAGNET WHICH PROVIDES THE MAGNETIC FIELD REQUIRED TO DEFINE THE PATH OF THE ELECTRON BEAM.

ELECTRICAL DATA:

HEATER, FOR OXIDE-COATED, UNIPOTENTIAL CATHODE		
VOLTAGE	6.3	VOLTS
CURRENT	2.0	AMPERES
FREQUENCY	4000-8000	MC
POWER OUTPUT (NOTE 1)	10	WATTS
GAIN, OPERATED AS		
POWER AMPLIFIER (NOTE 1)	30	DB
LOW-LEVEL AMPLIFIER (NOTE 1)	34	DB

MECHANICAL DATA:

MOUNT		SPECIAL
MOUNTING POSITION		ANY
BASE		MOULDED RUBBER WITH FLYING LEADS
SIZE	12 1/4 x 2 1/4 x 2 1/4	INCHES
NET WEIGHT	6.5	POUNDS
R-F CIRCUIT CONNECTORS		TYPE TNC
TYPE OF COOLING		AIR COOLED

NOTE 1: MINIMUM PERFORMANCE OVER THE FREQUENCY BAND OF 4000 TO 8000 MC.

MAXIMUM RATINGS:

Cathode Voltage with Respect to Ground	-3,000	Volts
Cathode Current	70	MA
Focus Electrode Voltage Range with Respect to Cathode	-15 to 0	Volts
Anode Voltage	Anode Connected Internally to Shell	
Shell Current	70	MA
Helix Voltage with respect to Shell	±500	Volts
Helix Current	3	MA
Collector Voltage	Anode Connected Internally to Shell	
Collector Current	Same as Shell	
Collector Dissipation	200	Watts
R-F Power Input	1	Watt Average
Load VSWR	3.0:1	

TYPICAL OPERATION:

As a Power Amplifier		
Frequency	6,000	MC
Cathode Voltage	2,800	Volts
Cathode Current	65	MA
Foucs Electrode Voltage with Respect to Cathode	-5	Volts
Shell Current	63	MA
Helix Current	2	MA
Power Output	10	Watts
Power Gain	30	DB
Duty	1.0	
As a Low-Level Amplifier		
Frequency	6,000	MC
Cathode Voltage	2,600	Volts
Cathode Current	55	MA
Focus Electrode Voltage with Respect to Cathode	-5	Volts
Shell Current	54	MA
Helix Current	1.5	MA
Power Output	300	MW
Power Gain	34	DB
Duty	1.0	

Additional information for specific applications can be obtained from the

Electron Tube Applications Section
ITT Components Division
Post Office Box 412
Clifton, New Jersey

X-370 - POWER IN VS POWER OUT
TYPICAL PERFORMANCE

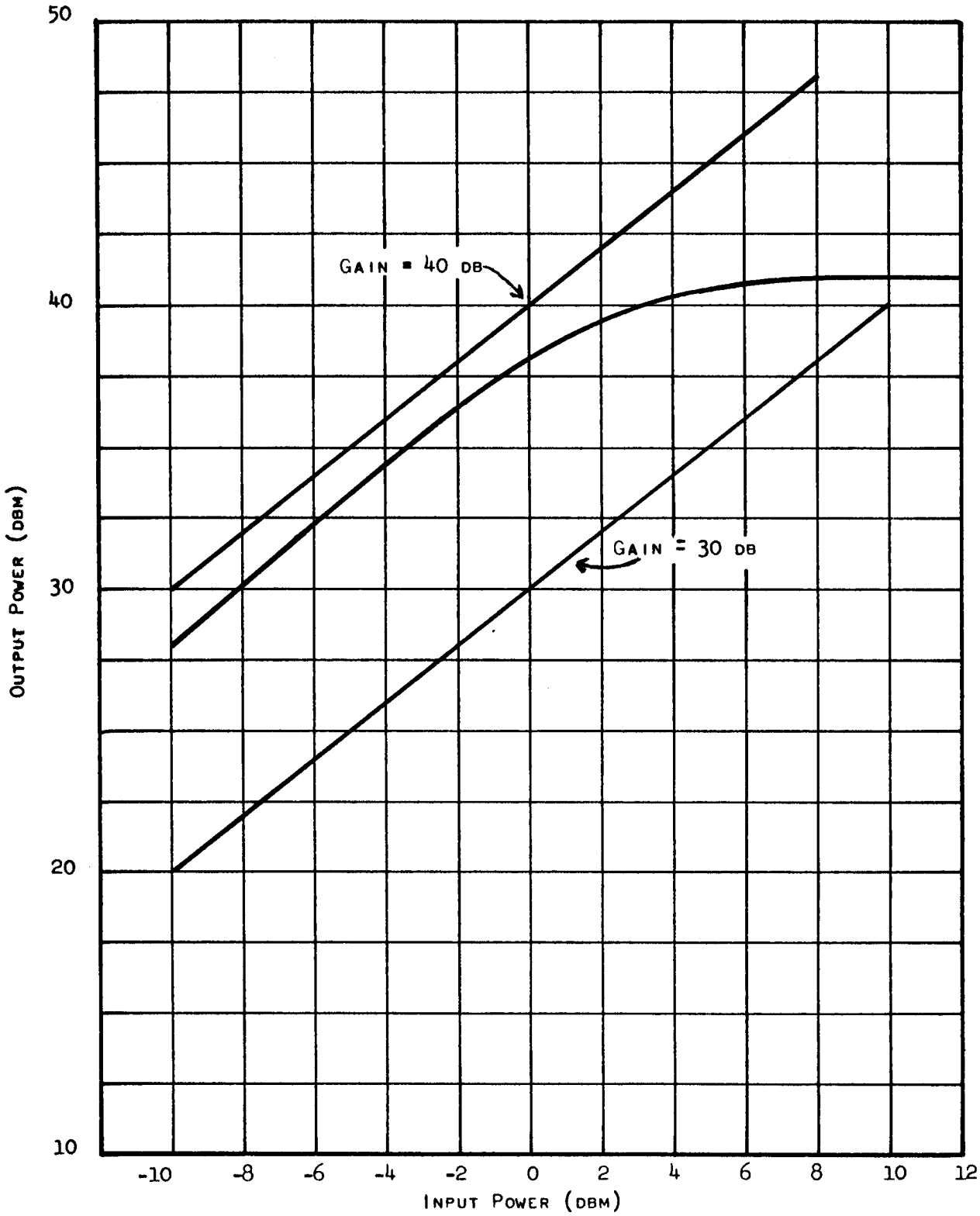

TYPICAL PERFORMANCE
X-370 TRAVELING WAVE TUBE

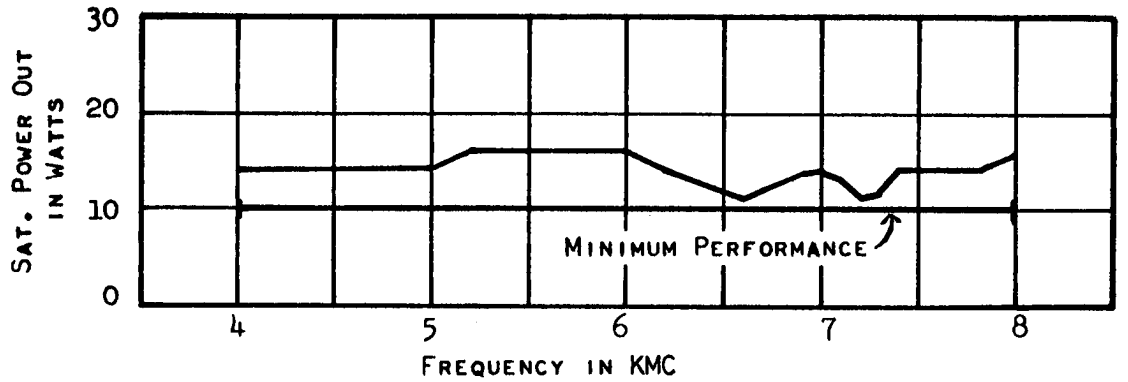

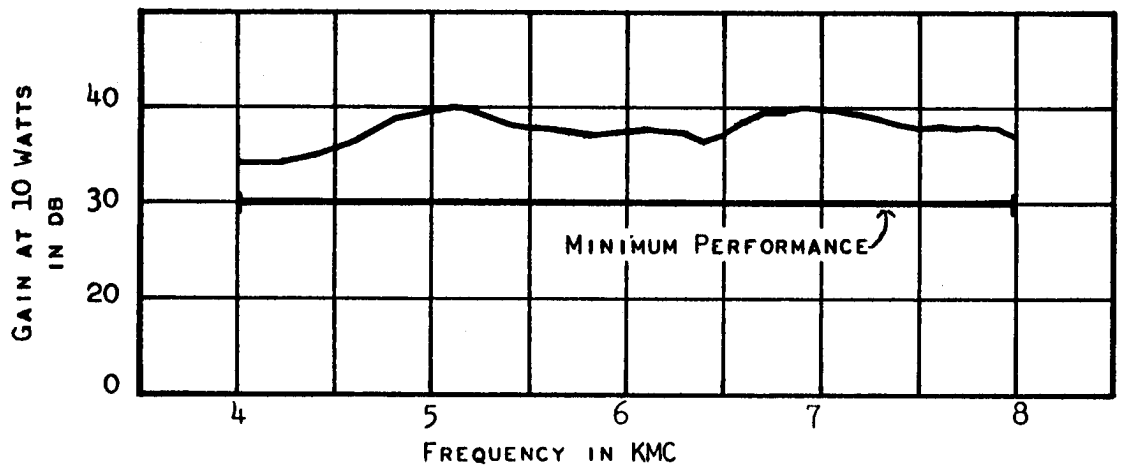

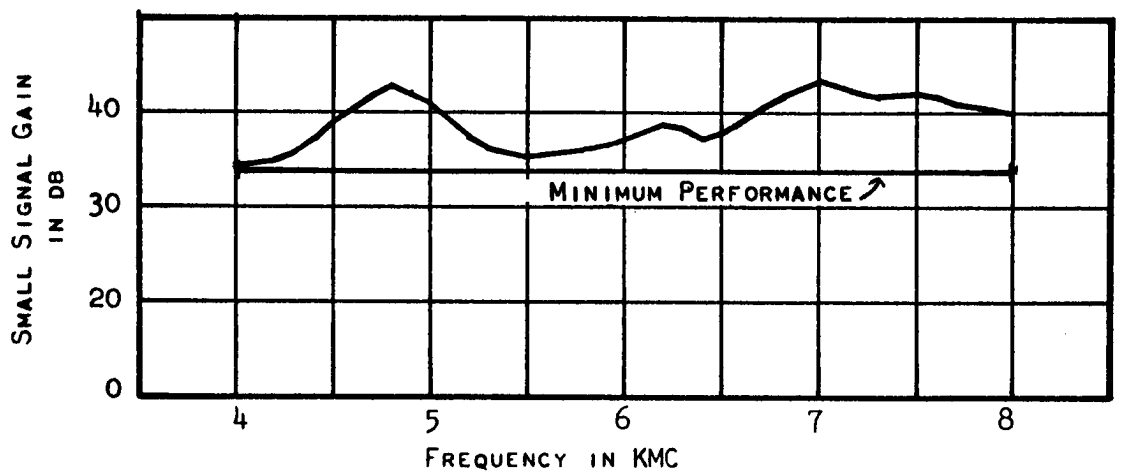

ELECTRON TUBE DEPARTMENT ■ COMPONENTS DIVISION
INTERNATIONAL TELEPHONE AND TELEGRAPH CORPORATION, CLIFTON, NEW JERSEY

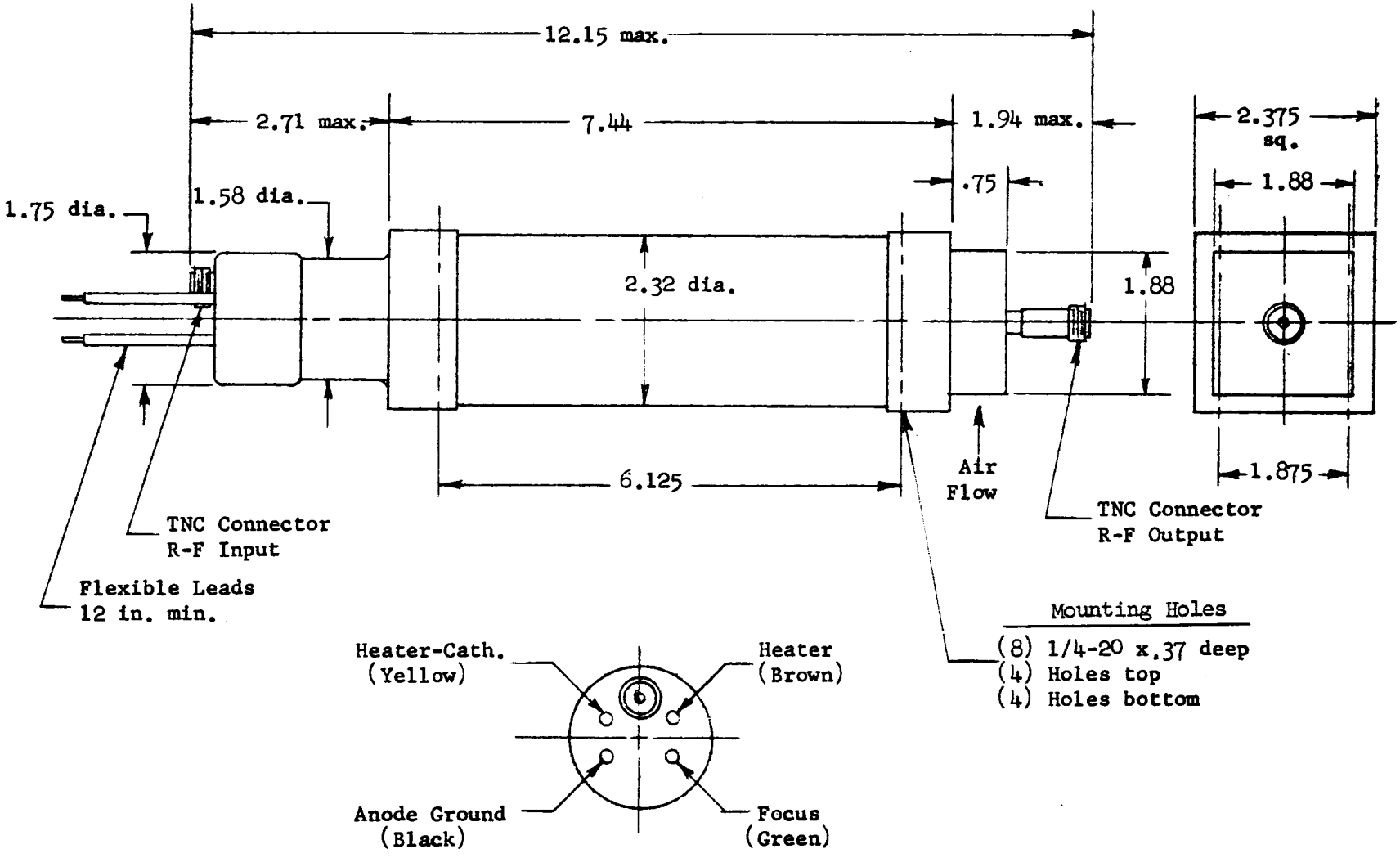

NOTE: All dimensions in inches

X-370 TUBE AND MAGNET PACKAGE

ELECTRON TUBE DEPARTMENT ■ COMPONENTS DIVISION
INTERNATIONAL TELEPHONE AND TELEGRAPH CORPORATION, CLIFTON, NEW JERSEY

X-388* BACKWARD WAVE CONVERTER TUBE

TENTATIVE

GENERAL CHARACTERISTICS:

The X-388 is a single tube designed to convert UHF signals in the band from 496-897 megacycles to a 50 megacycle intermediate frequency output signal.

The tube consists of a backward-wave amplifier and a backward wave oscillator in the same vacuum envelope. The r-f input signal is fed to the amplifier section where its level is increased. It is then mixed with the oscillator signal in the common electron beam that interacts with both r-f structures, to yield an i-f output signal which can be adjusted over a fairly large frequency range. This tube uses a 50 megacycle i-f.

The X-388 is a glass tube, mounted in an aluminum capsule. Solenoid focusing is required. A type "TNC" r-f input connector and a "TSM" i-f output connector are included as an integral part of the capsule. A type "TNC" l-o output connector can be supplied if required.

ELECTRICAL DATA:

Operating Frequency	496-897 megacycles
Bandwidth	10-25 megacycles
Noise Figure	20 db
I-F Output	50 megacycles
Conversion Gain	Unity
Image Rejection	40 db

Note: The image rejection is dependent upon the intermediate frequency selected. This tube utilizes a 50 megacycle i-f. An increase in the i-f would result in a higher level of image rejection.

* This number identifies a particular experimental tube design, such number and identification data being subject to change without notice. This tube is for experimental purposes only, carries no obligation for future manufacture, and should not be used for design purposes without prior arrangement.

MECHANICAL DATA:

Mounting Position	Horizontal (preferred)
Capsule Length	54 inches
Capsule Outside Diameter	3-1/4 inches
R-F Input Connector	Type "TNC" Coaxial, female
I-F Output Connector	Type "TSM" Coaxial, male
L-O Output Connector (if required)	Type "TNC" Coaxial, female
D-C Connections	Color coded flying leads

MAXIMUM RATINGS:

Heater Voltage	7.5 Volts maximum
Heater Current	4.5 Amperes maximum
Cathode Voltage	-100 to -1200 Volts maximum
Cathode Current	8 ma maximum
Focus Voltage	0 to -10 Volts maximum)
Anode No. 1 Voltage	15 to 80 Volts maximum)
Anode No. 2 Voltage	15 to 100 Volts maximum) With respect
Anode No. 3 Voltage	30 to 300 Volts maximum) to cathode
Anode No. 4 Voltage	100 to 500 Volts maximum)
Anode No. 5 Voltage)	
Amplifier Helix No. 1 Voltage)	
Amplifier Helix No. 2 Voltage)	Zero Volts (Ground)
Capsule Voltage)	
Oscillator Helix Voltage	-100 to +50 Volts maximum
Collector Voltage	250 Volts maximum
Focus Current	.3 ma maximum
Anode No. 1 Current	.3 ma maximum
Anode No. 2 Current	.3 ma maximum
Anode No. 3 Current	.3 ma maximum
Anode No. 4 Current	.3 ma maximum
Anode No. 5 Current	.3 ma maximum
Amplifier Helix No. 1 Current)	
Amplifier Helix No. 2 Current)	.5 ma maximum
Capsule Current)	
Oscillator Helix Current	.3 ma maximum
Collector Current	8 ma maximum
Solenoid Magnetic Field	500 Gauss maximum

TYPICAL OPERATION:

R-F Frequency	750 megacycles
L-O Frequency	700 megacycles
I-F Frequency	50 megacycles
Conversion Gain	0 db
Heater Voltage	7.0 Volts dc
Heater Current	3.9 Amperes
Cathode Voltage	-410 Volts with respect to ground
Cathode Current	3.0 ma
Focus Voltage	0 Volts)
Anode No. 1 Voltage	42 Volts)
Anode No. 2 Voltage	49 Volts) with respect to cathode
Anode No. 3 Voltage	56 Volts)
Anode No. 4 Voltage	164 Volts)
Anode No. 5 Voltage)	
Amplifier Helix No. 1 Voltage)	0 Volts (Ground)
Amplifier Helix No. 2 Voltage)	
Capsule Voltage)	
Oscillator Helix Voltage	-55 Volts)
Collector Voltage	200 Volts) with respect to ground
Focus Current	0 ma
Anode No. 1 Current	.06 ma
Anode No. 2 Current	.05 ma
Anode No. 3 Current	.05 ma
Anode No. 4 Current	.06 ma
Anode No. 5 Current	.04 ma
Amplifier Helix No. 1 Current)	
Amplifier Helix No. 2 Current)	.08 ma
Capsule Current)	
Oscillator Helix Current	.02 ma
Collector Current	2.6 ma
Solenoid Magnetic Field	450 Gauss

Additional information for specific application can be obtained from the

Electron Tube Application Section
ITT Components Division
P.O. Box 412
Clifton, New Jersey

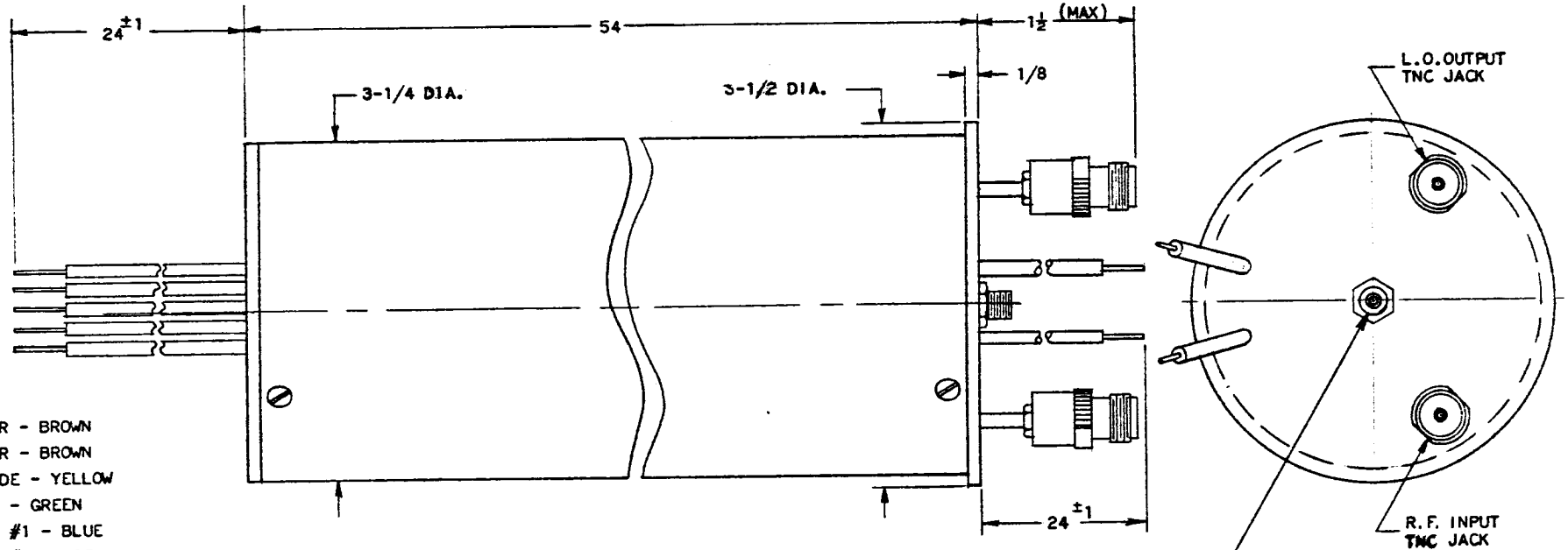

LEADS
HEATER - BROWN
HEATER - BROWN
CATHODE - YELLOW
FOCUS - GREEN
ANODE #1 - BLUE
ANODE #2 - GREY
ANODE #3 - PURPLE
ANODE #4 - WHITE
ANODE #5
AMPL. HELIX #1 — GROUND-BLACK
AMPL. HELIX #2
COLLECTOR - RED
OSCILLATOR HELIX - ORANGE

MAXIMUM WEIGHT
9½ POUNDS

BACKWARD WAVE CONVERTER

TYPE X-388

ELECTRON TUBE DEPARTMENT ■ COMPONENTS DIVISION
INTERNATIONAL TELEPHONE AND TELEGRAPH CORPORATION, CLIFTON, NEW JERSEY

X-389* BACKWARD WAVE AMPLIFIER TUBE

TENTATIVE

GENERAL CHARACTERISTICS:

The X-389 is a backward wave amplifier tube with a helical wave propagation structure employing continuous beam operation. The tube is designed for use as a narrow band medium noise r-f amplifier with a pass band that can be electronically tuned over the frequency range of 496 to 897 megacycles.

The X-389 is a glass envelope tube mounted in an aluminum capsule and requires a solenoid to focus the electron beam. Type "TNC" female r-f connectors are included as an integral part of the capsule.

ELECTRICAL DATA:

Frequency Range	496 - 897 megacycles
Pass Band (3 db)	1 - 5 megacycles
Small Signal Gain	20 db minimum
Noise Figure	15 db maximum

MECHANICAL DATA:

Mounting Position	Horizontal (preferred)
Capsule Length	45 inches
Capsule Diameter	3-1/4 inches
Net Weight	8 pounds
R-F Connectors	Type "TNC" Female
D-C Connections	Color Coded Flying Leads
Cooling	Not Required

* This number identifies a particular experimental tube design, such number and identification data being subject to change without notice. This tube is for experimental purposes only, carries no obligation for future manufacture and should not be used for design purposes without prior arrangement.

MAXIMUM RATINGS:

Heater Voltage	7.5 Volts maximum	
Heater Current	4.5 Amperes maximum	
Cathode Voltage	-100 to -1200 Volts maximum	
Cathode Current	5.0 ma maximum	
Focus Voltage	-10 to +10 Volts maximum	
Anode No. 1 Voltage	+5 to 80 Volts maximum	
Anode No. 2 Voltage	+5 to 100 Volts maximum	With respect
Anode No. 3 Voltage	+20 to 200 Volts maximum	to cathode
Anode No. 4 Voltage	+70 to 400 Volts maximum	
Anode No. 5 Voltage		
Helix No. 1 Voltage		
Helix No. 2 Voltage	Zero Volts (Ground)	
Capsule Voltage		
Collector Voltage	250 Volts maximum	
Focus Current	.2 ma maximum	
Anode No. 1 Current	.2 ma maximum	
Anode No. 2 Current	.2 ma maximum	
Anode No. 3 Current	.2 ma maximum	
Anode No. 4 Current	.2 ma maximum	
Anode No. 5 Current	.2 ma maximum	
Helix No. 1 Current		
Helix No. 2 Current	.3 ma maximum	
Capsule Current		
Collector Current	5 ma maximum	
Solenoid Magnetic Field	500 Gauss maximum	

TYPICAL OPERATION:

Frequency (Center of Pass Band)	750 megacycles	
Pass Band (3 db)	3 megacycles	
Small Signal Gain	23 db	
Noise Figure	13 db	
Heater Voltage	7.0 Vdc	
Heater Current	3.9 Adc	
Cathode Voltage	-410 Vdc with respect to ground	
Cathode Current	1.2 ma	
Focus Voltage	0 Vdc	
Anode No. 1 Voltage	19 Vdc	
Anode No. 2 Voltage	9 Vdc	with respect to cathode
Anode No. 3 Voltage	65 Vdc	
Anode No. 4 Voltage	180 Vdc	
Anode No. 5 Voltage		
Helix No. 1 Voltage	Zero Volts (Ground)	
Helix No. 2 Voltage		
Capsule Voltage		

Collector Voltage	200 Volts with respect to ground
Focus Current	0 ma
Anode No. 1 Current	.03 ma
Anode No. 2 Current	.02 ma
Anode No. 3 Current	.01 ma
Anode No. 4 Current	.02 ma
Anode No. 5 Current	.01 ma
Helix No. 1 Current)	
Helix No. 2 Current)	.01 ma
Capsule Current)	
Collector Current	1.1 ma
Magnetic Field	450 gauss

Additional Information For Specific Applications Can Be Obtained from the:

Electron Tube Applications Section
ITT Components Division
P.O. Box 412
Clifton, New Jersey

X-390*
BACKWARD WAVE CONVERTER TUBE

TENTATIVE

GENERAL CHARACTERISTICS

The X-390 is a single tube designed to convert UHF signals in the band from 853-1543 megacycles to a 50 megacycle intermediate frequency output signal.

The tube consists of a backward-wave amplifier and a backward wave oscillator in the same vacuum envelope. The r-f input signal is fed to the amplifier section where its level is increased. It is then mixed with the oscillator signal in the common electron beam that interacts with both r-f structures, to yield an i-f output signal which can be adjusted over a fairly large frequency range. This tube uses a 50 megacycle i-f.

The X-390 is a glass tube, mounted in an aluminum capsule. Solenoid focusing is required. A type TNC r-f input connector a "TSM" i-f output connector are included as an integral part of the capsule. A type "TNC" l-o output connector can be supplied if required.

ELECTRICAL DATA

Operating Frequency	853-1543 megacycles
Bandwidth of Input Section	10-25 megacycles
Noise Figure	20 db
I-F Output	50 megacycles
Conversion Gain	Unity
Image Rejection	35 db

Note: The image rejection is dependent upon the intermediate frequency selected. This tube utilizes a 50 megacycle i-f, an increase in the i-f would result in a higher level of image rejection.

*This number identifies a particular experimental tube design, such number and identification data being subject tochange without notice. This tube is for experimental purposes only, carries no obligation for future manufacture, and should not be used for design purposes without prior arrangement.

MECHANICAL DATA

Mounting Position	Horizontal (preferred)
Capsule Length	47-1/2 inches
Capsule Outside Diameter	3-1/2 inches
R-F Input Connector	Type "TNC" coaxial, female
I-F Output Connector	Type "TSM" coaxial, male
L-O Output Connector (if required)	Type "TNC" coaxial, female
D. C. Connections	Color coded flying leads

MAXIMUM RATINGS

Heater Voltage	7.5 Volts maximum	
Heater Current	4.5 Amperes maximum	
Cathode Voltage	-200 to -1450 Volts maximum	
Cathode Current	8 ma maximum	
Focus Voltage	0 to -10 Volts maximum)	
Anode No. 1 Voltage	+10 to +75 Volts maximum)	With respect
Anode No. 2 Voltage	+10 to +100 Volts maximum)	to cathode
Anode No. 3 Voltage	+30 to +300 Volts maximum)	
Anode No. 4 Voltage	+80 to +900 Volts maximum)	
Anode No. 5 Voltage	)	
Amplifier Helix No. 1 Voltage	) Zero Volts (Ground)	
Amplifier Helix No. 2 Voltage	)	
Capsule Voltage	)	
Oscillator Helix Voltage	-50 to +55 Volts maximum	
Collector Voltage	250 Volts maximum	
Focus Current	.3 ma maximum	
Anode No. 1 Current	.3 ma maximum	
Anode No. 2 Current	.3 ma maximum	
Anode No. 3 Current	.3 ma maximum	
Anode No. 4 Current	.3 ma maximum	
Anode No. 5 Current	.3 ma maximum	
Amplifier Helix No. 1 Current)		
Amplifier Helix No. 2 Current)	.5 ma maximum	
Capsule Current)		
Oscillator Helix Current	.3 ma maximum	
Collector Current	8 ma maximum	
Solenoid Magnetic Field	600 Gauss maximum	

TYPICAL OPERATION

R-F Frequency	1200	megacycles	
L-O Frequency	1150	megacycles	
I-F Frequency	50	megacycles	
Conversion Gain	0	db	
Heater Voltage	7.0	Volts	
Heater Current	3.9	Amperes	
Cathode Voltage	-545	Volts with respect to ground	
Cathode Current	4.0	ma	
Focus Voltage	0	Volts)	
Anode No. 1 Voltage	39	Volts)	
Anode No. 2 Voltage	51	Volts)	With respect to cathode
Anode No. 3 Voltage	70	Volts)	
Anode No. 4 Voltage	230	Volts)	
Anode No. 5 Voltage)			
Amplifier Helix No. 1 Voltage)			
Amplifier Helix No. 2 Voltage)	0	Volts (Ground)	
Capsule Voltage)			
Oscillator Helix Voltage	-40	Volts)	
Collector Voltage	200	Volts)	with respect to ground
Focus Current	0	ma	
Anode No. 1 Current	.07	ma	
Anode No. 2 Current	.04	ma	
Anode No. 3 Current	.04	ma	
Anode No. 4 Current	.05	ma	
Anode No. 5 Current	.06	ma	
Amplifier Helix No. 1 Current)			
Amplifier Helix No. 2 Current)	.08	ma	
Capsule Current)			
Oscillator Helix Current	.02	ma	
Collector Current	3.6	ma	
Solenoid Magnetic Field	500	Gauss	

Additional information for specific application can be obtained from the:

Electron Tube Application Section
ITT Components Division
P. O. Box 412
Clifton, New Jersey

ELECTRON TUBE DEPARTMENT ■ COMPONENTS DIVISION
INTERNATIONAL TELEPHONE AND TELEGRAPH CORPORATION, CLIFTON, NEW JERSEY

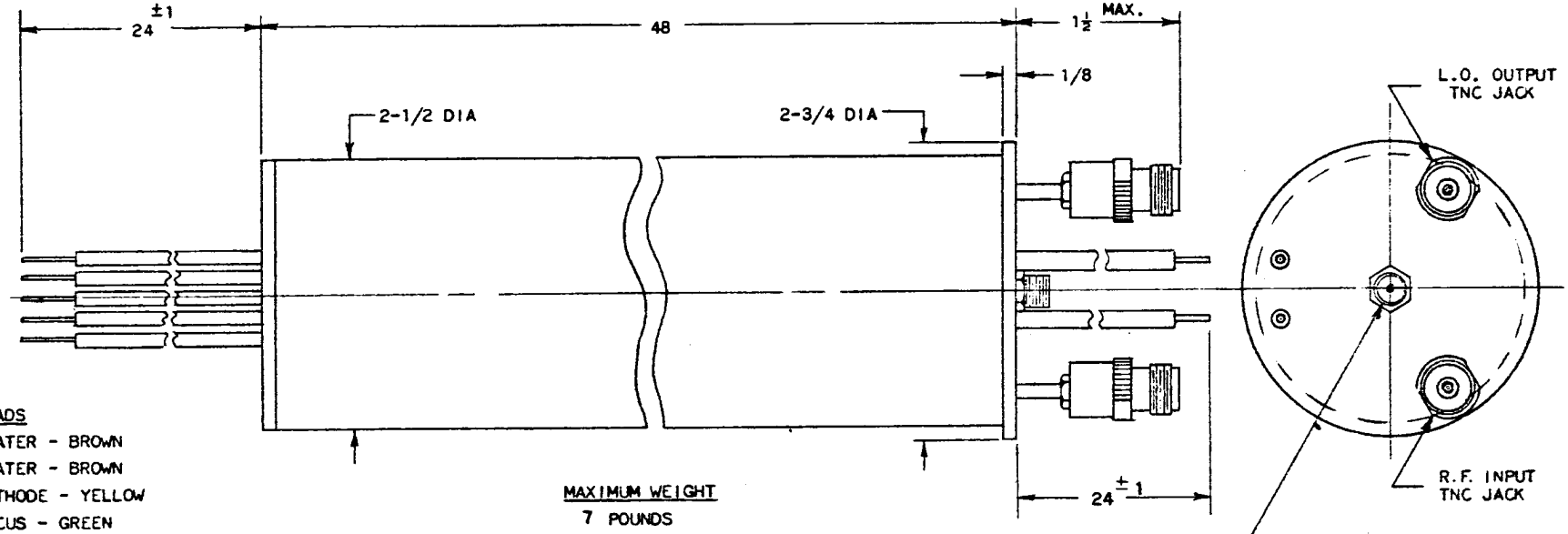

LEADS
HEATER - BROWN
HEATER - BROWN
CATHODE - YELLOW
FOCUS - GREEN
ANODE #1 - BLUE
ANODE #2 - GREY
ANODE #3 - PURPLE
ANODE #4 - WHITE
ANODE #5
AMPL. HELIX #1 — GROUND-BLACK
AMPL. HELIX #2
COLLECTOR - RED
OSCILLATOR HELIX-ORANGE

MAXIMUM WEIGHT
7 POUNDS

BACKWARD WAVE CONVERTER

TYPE X-390

ELECTRON TUBE DEPARTMENT ■ COMPONENTS DIVISION
INTERNATIONAL TELEPHONE AND TELEGRAPH CORPORATION, CLIFTON, NEW JERSEY

X-391* BACKWARD WAVE AMPLIFIER TUBE

TENTATIVE

GENERAL CHARACTERISTICS

The X-391 is an L-band backward wave amplifier tube with a helical wave propagation structure employing continuous beam operation. The tube is designed for use as a narrow band medium noise r-f amplifier with a pass band that can be electronically tuned over the frequency range of 853 to 1543 megacycles.

The X-391 is a glass envelope tube mounted in an aluminum capsule and requires a solenoid to focus the electron beam. Type "TNC" female r-f connectors are included as an integral part of the capsule.'

ELECTRICAL DATA

Frequency Range	853 - 1543 mcs
Pass Band (3 db)	2 - 8 mcs
Small Signal Gain	20 db minimum
Noise Figure	15 db maximum

MECHANICAL DATA

Mounting Position	Horizontal (preferred)
Capsule Length	40 inches
Capsule Diameter	2-1/2 inches
Net Weight	6 pounds
R-F Connectors	Type "TNC" Female
D-C Connections	Color Coded Flying Leads
Cooling	Not Required

*This number identifies a particular experimental tube design, such number and identification data being subject to change without notice. This tube is for experimental purposes only, carries no obligation for future manufacture and should not be used for design purposes without prior arrangement.

MAXIMUM RATINGS

Heater Voltage	7.5 Volts dc maximum
Heater Current	4.5 Amperes maximum
Cathode Voltage	-175 to -1300 Volts maximum
Cathode Current	4 ma maximum
Focus Voltage	-10 to +10 Volts maximum)
Anode No. 1 Voltage	+5 to +70 Volts maximum)
Anode No. 2 Voltage	+5 to +100 Volts maximum) with respect
Anode No. 3 Voltage	+30 to +300 Volts maximum) to cathode
Anode No. 4 Voltage	+80 to +800 Volts maximum)
Anode No. 5 Voltage)	
Helix No. 1 Voltage)	Zero Volts (Ground)
Helix No. 2 Voltage)	
Capsule Voltage)	
Collector Voltage	250 Volts maximum
Focus Current	.2 ma maximum
Anode No. 1 Current	.2 ma maximum
Anode No. 2 Current	.2 ma maximum
Anode No. 3 Current	.2 ma maximum
Anode No. 4 Current	.2 ma maximum
Anode No. 5 Current	.2 ma maximum
Helix No. 1 Current)	
Helix No. 2 Current)	.3 ma maximum
Capsule Current)	
Collector Current	4 ma maximum
Solenoid Magnetic Field	600 Gauss maximum

TYPICAL OPERATION

Frequency (Center of Pass Band)	1200 megacycles
Pass Band (3 db)	5 megacycles
Small Signal Gain	23 db
Noise Figure	12 db
Heater Voltage	7.0 Vdc
Heater Current	3.9 Adc
Cathode Voltage	-545 Vdc with respect to ground
Cathode Current	2.0 ma
Focus Voltage	-8 Vdc)
Anode No. 1 Voltage	+15 Vdc)
Anode No. 2 Voltage	+30 Vdc) with respect to cathode
Anode No. 3 Voltage	+150 Vdc)
Anode No. 4 Voltage	+300 Vdc)
Anode No. 5 Voltage)	
Helix No. 1 Voltage)	Zero Volts (Ground)
Helix No. 2 Voltage)	
Capsule Voltage)	
Collector Voltage	200 Volts with respect to ground
Focus Current	0 ma
Anode No. 1 Current	.02 ma
Anode No. 2 Current	.03 ma

Anode No. 3	.02 ma
Anode No. 4 Current	.01 ma
Anode No. 5 Current	.01 ma
Helix No. 1 Current)	
Helix No. 2 Current)	.01 ma
Capsule Current)	
Collector Current	1.9 ma
Magnetic Field	500 gauss

Additional information for specific applications can be obtained from the

Electron Tube Applications Section
ITT Components Division
P.O. Box 412
Clifton, New Jersey

ELECTRON TUBE DEPARTMENT ■ COMPONENTS DIVISION
INTERNATIONAL TELEPHONE AND TELEGRAPH CORPORATION, CLIFTON, NEW JERSEY

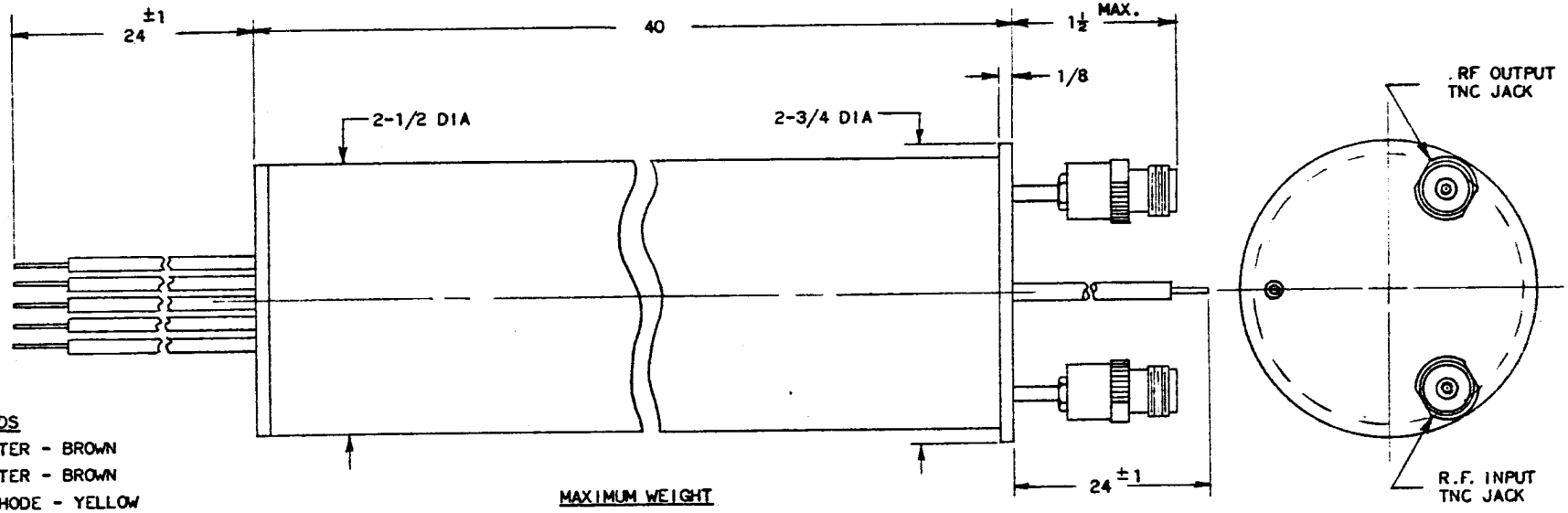

LEADS
HEATER - BROWN
HEATER - BROWN
CATHODE - YELLOW
FOCUS - GREEN
ANODE #1 - BLUE
ANODE #2 - GREY
ANODE #3 - PURPLE
ANODE #4 - WHITE
ANODE #5
AMPL. HELIX #1 } GROUND-BLACK
AMPL. HELIX #2
COLLECTOR - RED

MAXIMUM WEIGHT
6 POUNDS

BACKWARD WAVE AMPLIFIER

TYPE X-391

ELECTRON TUBE DEPARTMENT ■ COMPONENTS DIVISION
INTERNATIONAL TELEPHONE AND TELEGRAPH CORPORATION, CLIFTON, NEW JERSEY

X-392* BACKWARD WAVE CONVERTER TUBE

TENTATIVE

GENERAL CHARACTERISTICS

The X-392 is a single tube designed to convert UHF signals in the band from 1470-2670 megacycles to a 130 megacycle intermediate frequency output signal.

The tube consists of a backward-wave amplifier and a backward wave oscillator in the same vacuum envelope. The r-f input signal is fed to the amplifier section where its level is increased. It is then mixed with the oscillator signal in the common electron beam that interacts with both r-f structures, to yield an i-f output signal which can be adjusted over a fairly large frequency range. This tube uses a 130 megacycle i-f.

The X-392 is a glass tube, mounted in an aluminum capsule. Solenoid focusing is required. A type "TNC" r-f input connector and a "TSM" i-f output connector are included as an integral part of the capsule. A type "TNC" l-o output connector can be supplied if required.

ELECTRICAL DATA

Operating Frequency	1470-2670 megacycles
Bandwidth of Input Section	10-30 megacycles
Noise Figure	20 db
I-F Output	130 megacycles
Conversion Gain	Unity
Image Rejection	35 db

NOTE: The image rejection is dependent upon the intermediate frequency selected. This tube utilizes a 130 megacycle i-f, an increase in the i-f would result in a higher level of image rejection.

MECHANICAL DATA

Mounting Position	Horizontal (preferred)
Capsule Length	39 inches
Capsule Outside Diameter	2 inches
R-F Input Connector	Type "TNC" coaxial, female
I-F Output Connector	Type "TSM" coaxial, male
L-O Output Connector (if required)	Type "TNC" coaxial, female
D.C. Connections	Color Coded Flying leads

*This number identifies a particular experimental tube design, such number and identification data being subject to change without notice. This tube is for experimental purposes only, carries no obligation for future manufacture, and should not be used for design purposes without prior arrangement.

MAXIMUM RATINGS

Heater Voltage	6.5 Volts dc maximum	
Heater Current	4 Amperes maximum	
Cathode Voltage	-200 to -1400 Volts maximum	
Cathode Current	8 ma maximum	
Focus Voltage	0 to -10 Volts maximum)	With respect to cathode
Anode No. 1 Voltage	+10 to +70 Volts maximum)	
Anode No. 2 Voltage	+10 to +150 Volts maximum)	
Anode No. 3 Voltage	+30 to +300 Volts maximum)	
Anode No. 4 Voltage	+70 to +900 Volts maximum)	
Anode No. 5 Voltage)		
Amplifier Helix No. 1 Voltage)		
Amplifier Helix No. 2 Voltage)		
Capsule Voltage)	Zero Volts (Ground)	
Oscillator Helix Voltage	-50 to +100 Volts maximum	
Collector Voltage	250 Volts maximum	
Focus Current	.3 ma maximum	
Anode No. 1 Current	.3 ma maximum	
Anode No. 2 Current	.3 ma maximum	
Anode No. 3 Current	.3 ma maximum	
Anode No. 4 Current	.3 ma maximum	
Anode No. 5 Current	.3 ma maximum	
Amplifier Helix No. 1 Current)		
Amplifier Helix No. 2 Current)	.5 ma maximum	
Capsule Current)		
Oscillator Helix Current	.3 ma maximum	
Collector Current	8 ma maximum	
Solenoid Magnetic Field	700 Gauss maximum	

TYPICAL OPERATION

R-F Frequency	2200 megacycles	
L-O Frequency	2070 megacycles	
I-F Frequency	130 megacycles	
Conversion Gain	+3 db	
Heater Voltage	6.3 Volts dc	
Heater Current	3.5 Amperes	
Cathode Voltage	-680 Volts with respect to ground	
Cathode Current	4.0 ma	
Focus Voltage	0 Volts)	With respect to cathode
Anode No. 1 Voltage	35 Volts)	
Anode No. 2 Voltage	47 Volts)	
Anode No. 3 Voltage	230 Volts)	
Anode No. 4 Voltage	550 Volts)	
Anode No. 5 Voltage)		
Amplifier Helix No. 1 Voltage)		
Amplifier Helix No. 2 Voltage)	0 Volts (Ground)	
Capsule Voltage)		
Oscillator Helix Voltage	-30 Volts)	With respect to ground
Collector Voltage	200 Volts)	

Focus Current	0 ma
Anode No. 1 Current	.06 ma
Anode No. 2 Current	.05 ma
Anode No. 3 Current	.05 ma
Anode No. 4 Current	.06 ma
Anode No. 5 Current	.04 ma
Amplifier Helix No. 1 Current)	
Amplifier Helix No. 2 Current)	.08 ma
Capsule Current)	
Oscillator Helix Current	.02 ma
Collector Current	3.6 ma
Solenoid Magnetic Field	650 Gauss

Additional information for specific application can be obtained from the

Electron Tube Application Section
ITT Components Division
P.O. Box 412
Clifton, New Jersey

ELECTRON TUBE DEPARTMENT ■ COMPONENTS DIVISION
INTERNATIONAL TELEPHONE AND TELEGRAPH CORPORATION, CLIFTON, NEW JERSEY

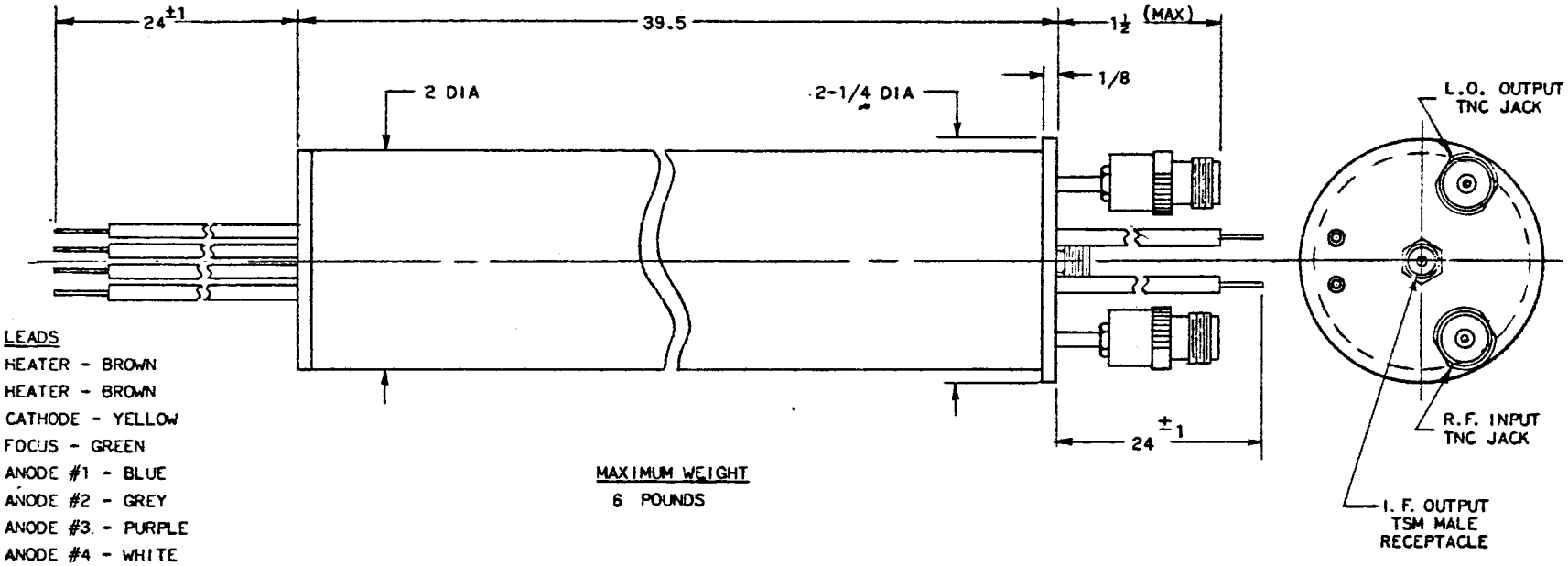

LEADS

HEATER - BROWN
HEATER - BROWN
CATHODE - YELLOW
FOCUS - GREEN
ANODE #1 - BLUE
ANODE #2 - GREY
ANODE #3 - PURPLE
ANODE #4 - WHITE
ANODE #5
AMPL. HELIX #1 — GROUND-BLACK
AMPL. HELIX #2
COLLECTOR - RED
OSCILLATOR HELIX - ORANGE

MAXIMUM WEIGHT
6 POUNDS

BACKWARD WAVE CONVERTER

TYPE X-392

ELECTRON TUBE DEPARTMENT ■ COMPONENTS DIVISION
INTERNATIONAL TELEPHONE AND TELEGRAPH CORPORATION, CLIFTON, NEW JERSEY

X-393* BACKWARD WAVE AMPLIFIER TUBE

T E N T A T I V E

GENERAL CHARACTERISTICS

The X-393 is an S-band backward wave amplifier tube with a helical wave propagation structure employing continuous beam operation. The tube is designed for use as a narrow band medium noise r-f amplifier with a pass band that can be electronically tuned over the frequency range of 1470 to 2670 megacycles.

The X-393 is a glass envelope tube mounted in an aluminum capsule and requires a solenoid to focus the electron beam. Type "TNC" female r-f connectors are included as an integral part of the capsule.

ELECTRICAL DATA

Frequency Range	1470 - 2670 mcs
Pass Band (3 db)	3 - 15 mcs
Small Signal Gain	20 db minimum
Noise Figure	15 db maximum

MECHANICAL DATA

Mounting Position	Horizontal (preferred)
Capsule Length	32 inches
Capsule Diameter	2 inches
Net Weight	5 pounds
R-F Connectors	Type "TNC" Female
D-C Connections	Color Coded Flying Leads
Cooling	Not Required

*This number identifies a particular experimental tube design, such number and identification data being subject to change without notice. This tube is for experimental purposes only, carries no obligation for future manufacture and should not be used for design purposes without prior arrangement.

MAXIMUM RATINGS

Heater Voltage	6.5 Volts dc maximum
Heater Current	4 Amperes maximum
Cathode Voltage	-200 to -1350 Volts maximum
Cathode Current	4 ma maximum
Focus Voltage	-10 to +10 Volts maximum)
Anode No. 1 Voltage	+5 to +70 Volts maximum)
Anode No. 2 Voltage	+10 to +150 Volts maximum) with respect
Anode No. 3 Voltage	+20 to +250 Volts maximum) to cathode
Anode No. 4 Voltage	+70 to +700 Volts maximum)
Anode No. 5 Voltage)	
Helix No. 1 Voltage)	
Helix No. 2 Voltage)	Zero Volts (Ground)
Capsule Voltage)	
Collector Voltage	250 Volts maximum
Focus Current	.2 ma maximum
Anode No. 1 Current	.2 ma maximum
Anode No. 2 Current	.2 ma maximum
Anode No. 3 Current	.2 ma maximum
Anode No. 4 Current	.2 ma maximum
Anode No. 5 Current	.2 ma maximum
Helix No. 1 Current)	
Helix No. 2 Current)	.3 ma maximum
Capsule Current)	
Collector Current	4 ma maximum
Solenoid Magnetic Field	700 Gauss maximum

TYPICAL OPERATION

Frequency (Center of Pass Band)	2200 megacycles
Pass Band (3 db)	9 megacycles
Small Signal Gain	23 db
Noise Figure	12 db
Heater Voltage	6.3 Vdc
Heater Current	3.5 ADC
Cathode Voltage	-680 Vdc with respect to ground
Cathode Current	2.0 ma
Focus Voltage	-7 Vdc)
Anode No. 1 Voltage	+18 Vdc)
Anode No. 2 Voltage	+15 Vdc) with respect to cathode
Anode No. 3 Voltage	+210 Vdc)
Anode No. 4 Voltage	+450 Vdc)
Anode No. 5 Voltage)	
Helix No. 1 Voltage)	
Helix No. 2 Voltage)	Zero Volts (Ground)
Capsule Voltage)	
Collector Voltage	200 Volts with respect to ground
Focus Current	0 ma
Anode No. 1 Current	.03 ma

Anode No. 2 Current	.01 ma
Anode No. 3 Current	.01 ma
Anode No. 4 Current	.01 ma
Anode No. 5 Current	.01 ma
Helix No. 1 Current)	
Helix No. 2 Current)	.03 ma
Capsule Current)	
Collector Current	1.9 ma
Magnetic Field	650 gauss

Additional information for specific applications can be obtained from the

Electron Tube Applications Section
ITT Components Division
P.O. Box 412
Clifton, New Jersey

ELECTRON TUBE DEPARTMENT ■ COMPONENTS DIVISION
INTERNATIONAL TELEPHONE AND TELEGRAPH CORPORATION, CLIFTON, NEW JERSEY

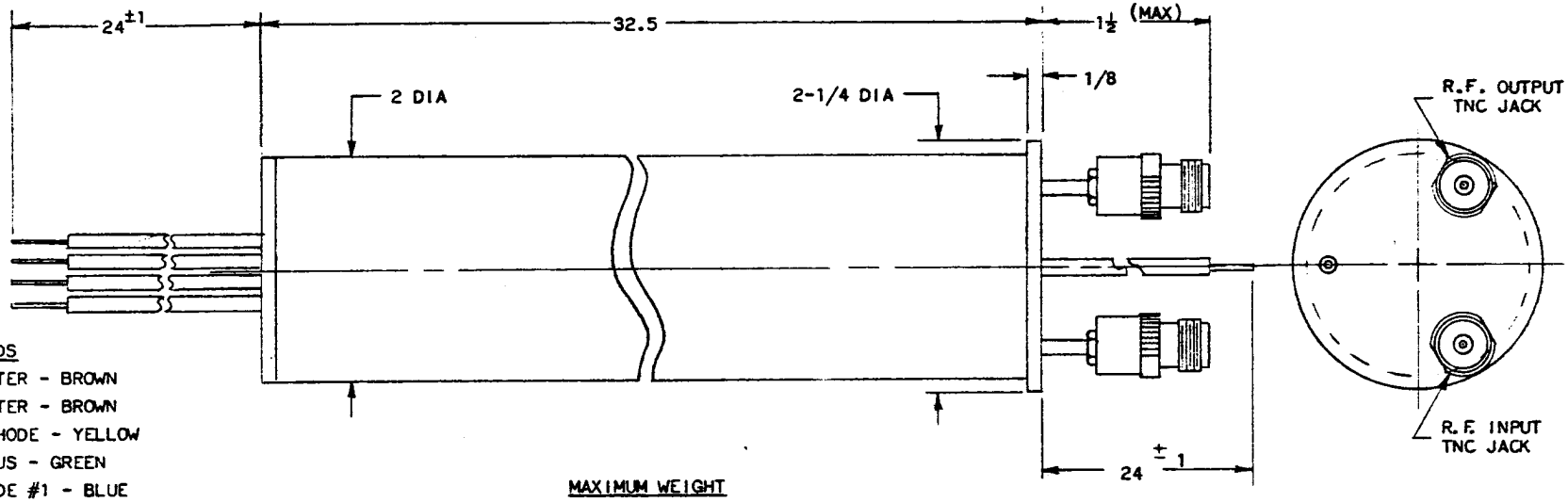

LEADS
HEATER - BROWN
HEATER - BROWN
CATHODE - YELLOW
FOCUS - GREEN
ANODE #1 - BLUE
ANODE #2 - GREY
ANODE #3 - PURPLE
ANODE #4 - WHITE
ANODE #5
AMPL. HELIX #1 } GROUND-BLACK
AMPL. HELIX #2
COLLECTOR - RED

MAXIMUM WEIGHT
5 POUNDS

BACKWARD WAVE AMPLIFIER

TYPE X-393

X-394* BACKWARD WAVE CONVERTER TUBE

T E N T A T I V E

GENERAL CHARACTERISTICS

The X-394 is a single tube designed to convert SHF signals in the band from 2540-4050 megacycles to a 180 megacycle intermediate frequency output signal.

The tube consists of a backward-wave amplifier and a backward wave oscillator in the same vacuum envelope. The r-f input signal is fed to the amplifier section where its level is increased. It is then mixed with the oscillator signal in the common electron beam that interacts with both r-f structures, to yield an i-f output signal which can be adjusted over a fairly large frequency range. This tube uses a 180 megacycle i-f.

The X-394 is a glass tube, mounted in an aluminum capsule. Solenoid focusing is required. A type TNC r-f input connector and a "TSM" i-f output connector are included as an integral part of the capsule. A type "TNC" l-o output connector can be supplied if required.

ELECTRICAL DATA

Operating Frequency	2540-4050 megacycles
Bandwidth of Input Section	10-40 megacycles
Noise Figure	20 db
I-F Output	180 megacycles
Conversion Gain	Unity
Image Rejection	35 db

NOTE: The image rejection is dependent upon the intermediate frequency selected. This tube utilizes a 180 megacycle i-f, an increase in the i-f would result in a higher level of image rejection.

MECHANICAL DATA

Mounting Position	Any
Capsule Length	31 inches
Capsule Outside Diameter	1-3/8 inches
R-F Input Connector	Type "TNC" coaxial, female
I-F Output Connector	Type "TSM" coaxial, male
L-O Output connector (if required)	Type "TNC" coaxial, female
D.C. Connections	Color coded flying leads.

*This number identifies a particular experimental tube design, such number and identification data being subject to change without notice. This tube is for experimental purposes only, carries no obligation for future manufacture, and should not be used for design purposes without prior arrangement.

MAXIMUM RATINGS

Heater Voltage	6.5 Volts dc maximum
Heater Current	4.0 Amperes maximum
Cathode Voltage	-250 to -1500 Volts maximum
Cathode Current	8 ma maximum
Focus Voltage	0 to -10 Volts maximum)
Anode No. 1 Voltage	+15 to +75 Volts maximum)
Anode No. 2 Voltage	+15 to +150 Volts maximum) with respect
Anode No. 3 Voltage	+30 to +350 Volts maximum) to cathode
Anode No. 4 Voltage	+100 to +900 Volts maximum)
Anode No. 5 Voltage)	
Amplifier Helix No. 1 Voltage)	
Amplifier Helix No. 2 Voltage)	Zero Volts (Ground)
Capsule Voltage)	
Oscillator Helix Voltage	-50 to +100 Volts maximum
Collector Voltage	250 Volts maximum
Focus Current	.3 ma maximum'
Anode No. 1 Current	.3 ma maximum
Anode No. 2 Current	.3 ma maximum
Anode No. 3 Current	.3 ma maximum
Anode No. 4 Current	.3 ma maximum
Anode No. 5 Current	.3 ma maximum
Amplifier Helix No. 1 Current)	
Amplifier Helix No. 2 Current)	.5 ma maximum
Capsule Current)	
Oscillator Helix Current	.3 ma maximum
Collector Current	8 ma maximum
Solenoid Magnetic Field	750 Gauss maximum

TYPICAL OPERATION

R-F Frequency	3500 megacycles
L-O Frequency	3320 megacycles
I-F Frequency	180 megacycles
Conversion Gain	0 db
Heater Voltage	6.3 Volts dc
Heater Current	3.5 Amperes
Cathode Voltage	-820 Volts with respect to ground
Cathode Current	4.5 ma
Focus Voltage	0 Volts)
Anode No. 1 Voltage	54 Volts)
Anode No. 2 Voltage	60 Volts) With respect to cathode
Anode No. 3 Voltage	210 Volts)
Anode No. 4 Voltage	320 Volts)
Anode No. 5 Voltage)	
Amplifier Helix No. 1 Voltage)	0 Volts (Ground)
Amplifier Helix No. 2 Voltage)	
Capsule Voltage)	

Oscillator Helix Voltage	-20 Volts)
Collector Voltage	200 Volts) with respect to ground
Focus Current	0 ma
Anode No. 1 Current	.08 ma
Anode No. 2 Current	.06 ma
Anode No. 3 Current	.05 ma
Anode No. 4 Current	.05 ma
Anode No. 5 Current	.06 ma
Amplifier Helix No. 1 Current)	
Amplifier Helix No. 2 Current)	.08 ma
Capsule Current)	
Oscillator Helix Current	.02 ma
Collector Current	4.1 ma
Solenoid Magnetic Field	650 Gauss

Additional information for specific application can be obtained from the

Electron Tube Application Section
ITT Components Division
P.O. Box 412
Clifton, New Jersey

ITT
ELECTRON TUBE DEPARTMENT ■ COMPONENTS DIVISION
INTERNATIONAL TELEPHONE AND TELEGRAPH CORPORATION, CLIFTON, NEW JERSEY

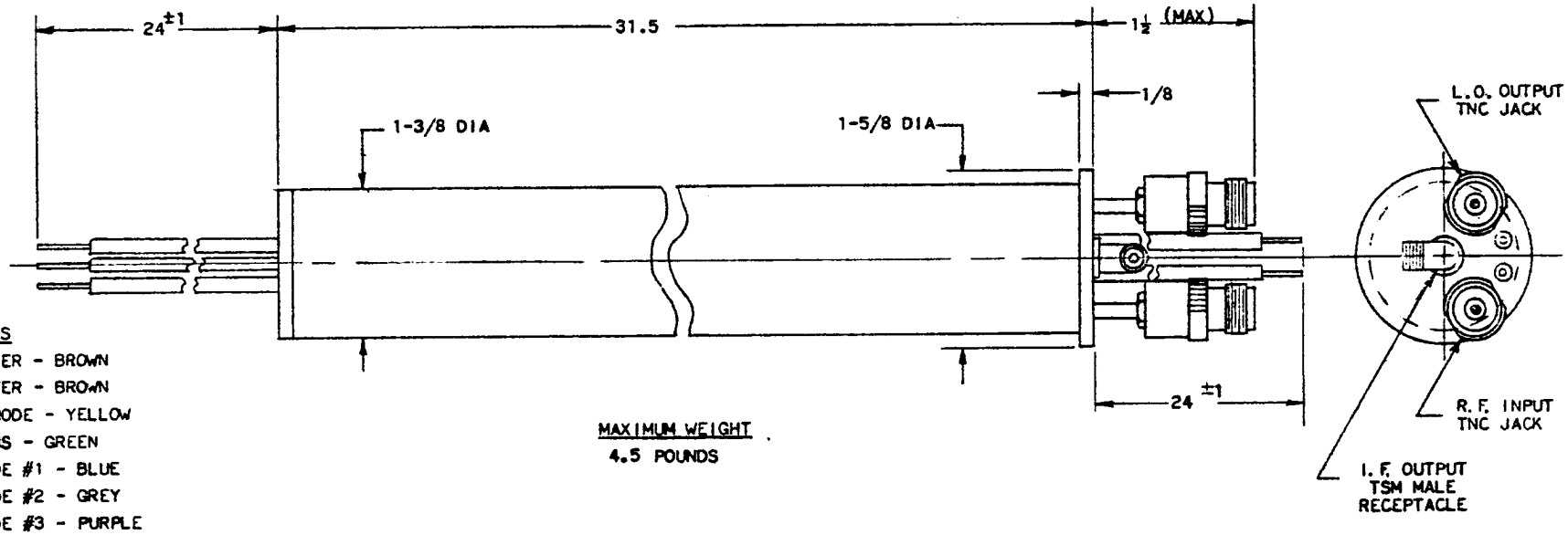

LEADS

HEATER - BROWN
HEATER - BROWN
CATHODE - YELLOW
FOCUS - GREEN
ANODE #1 - BLUE
ANODE #2 - GREY
ANODE #3 - PURPLE
ANODE #4 - WHITE
ANODE #5
AMPL. HELIX #1 — GROUND-BLACK
AMPL. HELIX #2
COLLECTOR - RED
OSCILLATOR HELIX - ORANGE

MAXIMUM WEIGHT
4.5 POUNDS

BACKWARD WAVE CONVERTER

TYPE X-394

ELECTRON TUBE DEPARTMENT ■ COMPONENTS DIVISION
INTERNATIONAL TELEPHONE AND TELEGRAPH CORPORATION, CLIFTON, NEW JERSEY

X-395* BACKWARD WAVE AMPLIFIER TUBE

T E N T A T I V E

GENERAL CHARACTERISTICS

The X-395 is an S-band backward wave amplifier tube with a helical wave propagation structure employing continuous beam operation. The tube is designed for use as a narrow band medium noise r-f amplifier with a pass band that can be electronically tuned over the frequency range of 2540 to 4050 megacycles.

The X-395 is a glass envelope tube mounted in an aluminum capsule and requires a solenoid to focus the electron beam. Type "TNC" female r-f connectors are included as an integral part of the capsule.

ELECTRICAL DATA

Frequency Range	2540 - 4050 mcs
Pass Band (3 db)	6 - 22 mcs
Small Signal Gain	20 db minimum
Noise Figure	15 db maximum

MECHANICAL DATA

Mounting Position	Any
Capsule Length	24 inches
Capsule Diameter	1-3/8 inches
Net Weight	3-1/2 pounds
R-F Connectors	Type "TNC" Female
D-C Connections	Color Coded Flying Leads
Cooling	Not Required

*This number identifies a particular experimental tube design, such number and identification data being subject to change without notice. This tube is for experimental purposes only, carries no obligation for future manufacture and should not be used for design purposes without prior arrangement.

MAXIMUM RATINGS

Heater Voltage	6.5 Volts dc maximum
Heater Current	4 Amperes maximum
Cathode Voltage	-250 to -1400 Volts maximum
Cathode Current	4 ma maximum
Focus Voltage	-10 to +10 Volts maximum)
Anode No. 1 Voltage	+5 to +80 Volts maximum)
Anode No. 2 Voltage	+5 to 200 Volts maximum) with respect
Anode No. 3 Voltage	+20 to 300 Volts maximum) to cathode
Anode No. 4 Voltage	+70 to 800 Volts maximum)
Anode No. 5 Voltage)	
Helix No. 1 Voltage)	
Helix No. 2 Voltage)	Zero Volts (Ground)
Capsule Voltage)	
Collector Voltage	250 Volts maximum
Focus Current	.2 ma maximum
Anode No. 1 Current	.2 ma maximum
Anode No. 2 Current	.2 ma maximum
Anode No. 3 Current	.2 ma maximum
Anode No. 4 Current	.2 ma maximum
Anode No. 5 Current	.2 ma maximum
Helix No. 1 Current)	
Helix No. 2 Current)	.3 ma maximum
Capsule Current)	
Collector Current	4 ma maximum
Solenoid Magnetic Field	750 Gauss maximum

TYPICAL OPERATION

Frequency (Center of Pass Band)	3500 megacycles
Pass Band (3 db)	14 megacycles
Small Signal Gain	24 db
Noise Figure	12 db
Heater Voltage	6.3 Vdc
Heater Current	3.5 Adc
Cathode Voltage	-820 Vdc with respect to ground
Cathode Current	2.0 ma
Focus Voltage	-7 Vdc)
Anode No. 1 Voltage	+18 Vdc)
Anode No. 2 Voltage	+15 Vdc) with respect to cathode
Anode No. 3 Voltage	+200 Vdc)
Anode No. 4 Voltage	+300 Vdc)
Anode No. 5 Voltage)	
Helix No. 1 Voltage)	
Helix No. 2 Voltage)	Zero Volts (Ground)
Capsule Voltage)	
Collector Voltage	200 Volts with respect to ground

Focus Current	0 ma
Anode No. 1 Current	.05 ma
Anode No. 2 Current	.02 ma
Anode No. 3 Current	.03 ma
Anode No. 4 Current	.05 ma
Anode No. 5 Current	.02 ma
Helix No. 1 Current) Helix No. 2 Current) Capsule Current)	.03 ma
Collector Current	1.8 ma
Magnetic Field	700 gauss

Additional information for specific applications can be obtained from the

Electron Tube Applications Section
ITT Components Division
P.O. Box 412
Clifton, New Jersey

ELECTRON TUBE DEPARTMENT ■ COMPONENTS DIVISION
INTERNATIONAL TELEPHONE AND TELEGRAPH CORPORATION, CLIFTON, NEW JERSEY

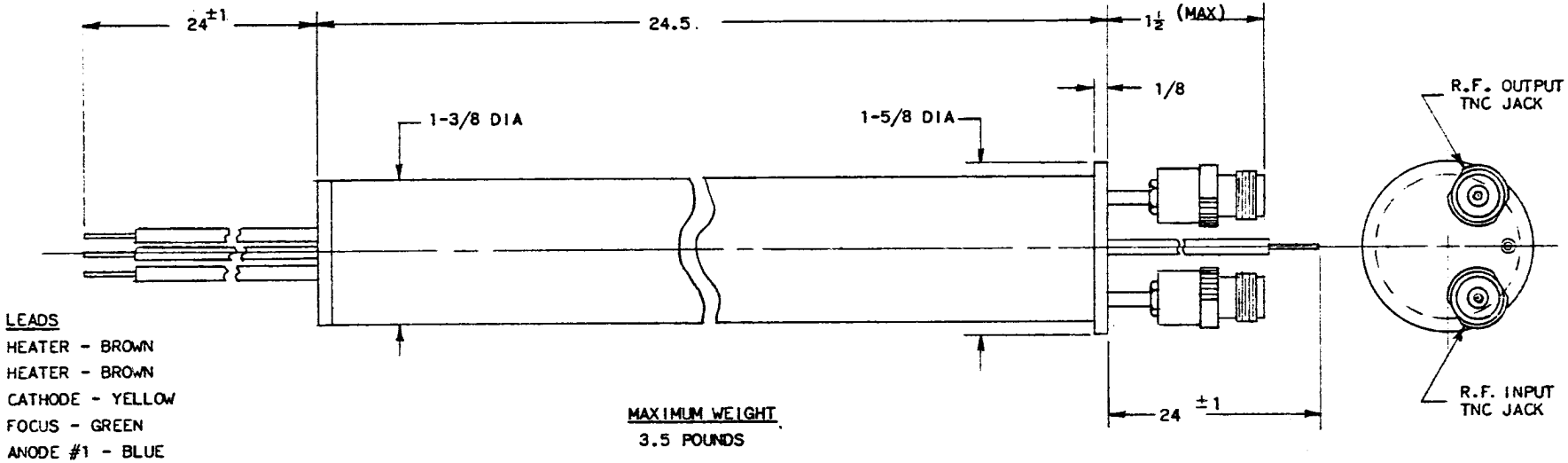

LEADS
HEATER - BROWN
HEATER - BROWN
CATHODE - YELLOW
FOCUS - GREEN
ANODE #1 - BLUE
ANODE #2 - GREY
ANODE #3 - PURPLE
ANODE #4 - WHITE
ANODE #5
AMPL. HELIX #1 } GROUND-BLACK
AMPL. HELIX #2
COLLECTOR - RED

MAXIMUM WEIGHT
3.5 POUNDS

BACKWARD WAVE AMPLIFIER

TYPE X-395

ELECTRON TUBE DEPARTMENT ■ COMPONENTS DIVISION
INTERNATIONAL TELEPHONE AND TELEGRAPH CORPORATION, CLIFTON, NEW JERSEY

X-396* BACKWARD WAVE CONVERTER TUBE

TENTATIVE

GENERAL CHARACTERISTICS

The X-396 is a single tube designed to convert SHF signals in the band from 3850-6000 megacycles toa 280 megacycle intermediate frequency output signal.

The tube consists of a backward-wave amplifier and a backward wave oscillator in the same vacuum envelope. The r-f input signal is fed to the amplifier section where its level is increased. It is then mixed with the oscillator signal in the common electron beam that interacts with both r-f structures, to yield an i-f output signal which can be adjusted over a fairly large frequency range. This tube uses a 280 megacycle i-f.

The X-396 is a glass tube, mounted in an aluminum capsule. Solenoid focusing is required. A type TNC r-f input connector and a "TSM" i-f output connector are included as an integral part of the capsule. A type "TNC" l-o output connection can be supplied if required.

ELECTRICAL DATA

Operating Frequency	3850-6000 megacycles
Bandwidth of Input Section	12-60 megacycles
Noise Figure	20 db
I-F Output	280 megacycles
Conversion Gain	Unity
Image Rejection	35 db

Note: The image rejection is dependent upon the intermediate frequency selected. This tube utilizes a 280 megacycle i-f, an increase in the i-f would result in a higher level of image rejection.

*This number identifies a particular experimental tube design, such number and identification data being subject to change without notice. This tube is for experimental purposes only, carries no obligation for future manufacture, and should not be used for design purposes without prior arrangement.

MECHANICAL DATA

Mounting Position	Any
Capsule Length	24 inches
Capsule Outside Diameter	1-1/8 inches
R-F Input Connector	Type "TNC" coaxial, female
I-F Output Connector	Type "TSM" coaxial, male
L-O Output Connector	Type "TNC" coaxial female
D-C Connections	Color coded flying leads

MAXIMUM RATINGS

Heater Voltage	6.5	Volts dc maximum	
Heater Current	2	Amperes maximum	
Cathode Voltage	-300 to -1300	Volts maximum	
Cathode Current	8	ma maximum	
Focus Voltage	0 to -10	Volts maximum)	
Anode No. 1 Voltage	+15 to +75	Volts maximum)	
Anode No. 2 Voltage	+15 to +100	Volts maximum)	With respect to
Anode No. 3 Voltage	+30 to +300	Volts maximum)	cathode
Anode No. 4 Voltage	+100 to +800	Volts maximum)	
Anode No. 5 Voltage	)		
Amplifier Helix No. 1 Voltage	)		
Amplifier Helix No. 2 Voltage	) Zero Volts (Ground)		
Capsule Voltage	)		
Oscillator Helix Voltage	-50 to +100	Volts maximum	
Collector Voltage	250	Volts maximum	
Focus Current	.3	ma maximum	
Anode No. 1 Current	.3	ma maximum	
Anode No. 2 Current	.3	ma maximum	
Anode No. 3 Current	.3	ma maximum	
Anode No. 4 Current	.3	ma maximum	
Anode No. 5 Current	.3	ma maximum	
Amplifier Helix No. 1 Current)			
Amplifier Helix No. 2 Current)	.5	ma maximum	
Capsule Current)			
Oscillator Helix Current	.3	ma maximum	
Collector Current	8	ma maximum	
Solenoid Magnetic Field	800	Gauss maximum	

TYPICAL OPERATION

R-F Frequency	5000	megacycles
L-O Frequency	4720	megacycles
I-F Frequency	280	megacycles
Conversion Gain	+2	db
Heater Voltage	6.3	Volts dc
Heater Current	1.9	Amperes
Cathode Voltage	-610	Volts with respect to ground
Cathode Current	4.5	ma
Focus Voltage	0	Volts)
Anode No. 1 Voltage	40	Volts)
Anode No. 2 Voltage	50	Volts) With respect to cathode
Anode No. 3 Voltage	120	Volts)
Anode No. 4 Voltage	240	Volts)
Anode No. 5 Voltage) Amplifier Helix No.1 Voltage) Capsule Voltage)	0	Volts (Ground)
Oscillator Helix Voltage	-10	Volts)
Collector Voltage	200	Volts) with respect to ground
Focus Current	0	ma
Anode No. 1 Current	.1	ma
Anode No. 2 Current	.05	ma
Anode No. 3 Current	.05	ma
Anode No. 4 Current	.06	ma
Anode No. 5 Current	.04	ma
Amplifier Helix No. 1 Current) Amplifier Helix No. 2 Current) Capsule Current)	.12	ma
Oscillator Helix Current	.04	ma
Collector Current	4.0	ma
Solenoid Magnetic Field	700	Gauss

Additional information for specific application can be obtained from the:

Electron Tube Application Section
ITT Components Division
P. O. Box 412
Clifton, New Jersey

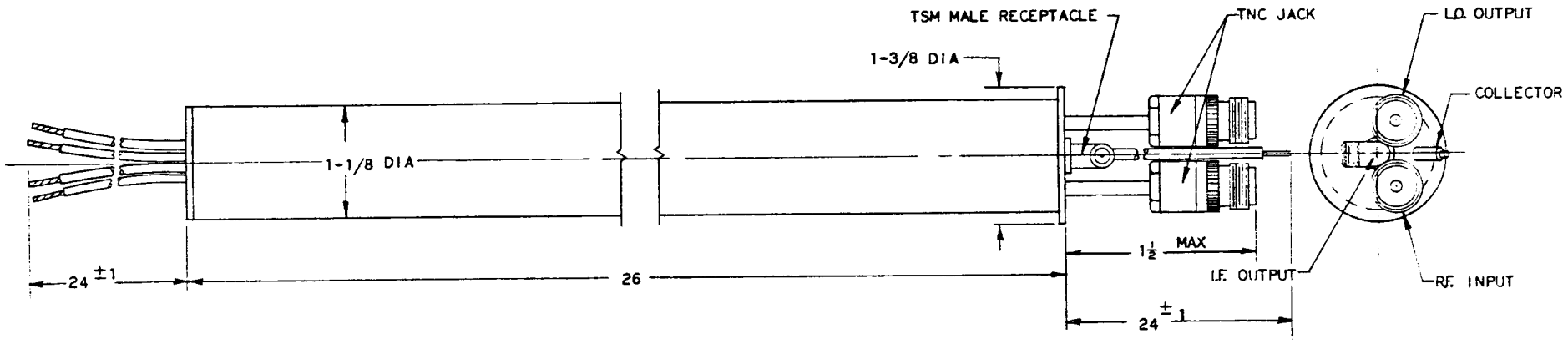

MAXIMUM WEIGHT

2 POUNDS

LEADS

HEATERS - BROWN
CATHODE - YELLOW
FOCUS - GREEN
ANODE NO. 1 - BLUE
ANODE NO. 2 - GREY
ANODE NO. 3 - PURPLE
ANODE NO. 4 - WHITE
ANODE NO. 5 }
AMPL. HELIX NO. 1 } ——GROUND-BLACK
AMPL. HELIX NO. 2 }
COLLECTOR - RED
OSCILLATOR HELIX - INNER CONDUCTOR OF L O OUTPUT JACK

BACKWARD WAVE CONVERTER

TYPE X-396

ELECTRON TUBE DEPARTMENT ■ COMPONENTS DIVISION
INTERNATIONAL TELEPHONE AND TELEGRAPH CORPORATION, CLIFTON, NEW JERSEY

X-397* BACKWARD WAVE AMPLIFIER TUBE

T E N T A T I V E

GENERAL CHARACTERISTICS

The X-397 is a C-band backward wave amplifier tube with a helical wave propagation structure employing continuous beam operation. The tube is designed for use as a narrow band medium noise r-f amplifier with a pass band that can be electronically tuned over the frequency range of 3850 to 6000 megacycles.

The X-397 is a glass envelope tube mounted in an aluminum capsule and requires a solenoid to focus the electron beam. Type "TNC" female r-f connectors are included as an integral part of the capsule.

ELECTRICAL DATA

Frequency Range	3850-6000 megacycles
Pass Band (3 db)	8 to 33 megacycles
Small Signal Gain	20 db minimum
Noise Figure	15 db maximum

MECHANICAL DATA

Mounting Position	Any
Capsule Length	20 inches
Capsule Diameter	1-1/8 inches
Net Weight	2 pounds
R-F Connectors	Type "TNC", female
D. C. Connections	Color Coded Flying Leads
Cooling	Not Required

*This number identifies a particular experimental tube design, such number and identification data being subject to change without notice. This tube is for experimental purposes only, carries no obligation for future manufacture and should not be used for design purposes without prior arrangement.

MAXIMUM RATINGS

Heater Voltage	6.5	Volts dc maximum
Heater Current	2	Amperes maximum
Cathode Voltage	-250 to -1200	Volts maximum
Cathode Current	4	ma maximum
Focus Voltage	-10 to +10	Volts maximum)
Anode No. 1 Voltage	+5 to +80	Volts maximum)
Anode No. 2 Voltage	+5 to +100	Volts maximum)
Anode No. 3 Voltage	+20 to +300	Volts maximum) with respect to
Anode No. 4 Voltage	+70 to +800	Volts maximum) cathode
Anode No. 5 Voltage)		
Helix No. 1 Voltage)		
Helix No. 2 Voltage)		Zero Volts (Ground)
Capsule Voltage)		
Collector Voltage	250	Volts maximum
Focus Current	.2	ma maximum
Anode No. 1 Current	.2	ma maximum
Anode No. 2 Current	.2	ma maximum
Anode No. 3 Current	.2	ma maximum
Anode No. 4 Current	.2	ma maximum
Anode No. 5 Current	.2	ma maximum
Helix No. 1 Current)		
Helix No. 2 Current)	.3	ma maximum
Capsule Current)		
Collector Current	4	ma maximum
Solenoid Magnetic Field	800	Gauss maximum

TYPICAL OPERATION

Frequency (Center of Pass Band)	5000	megacycles
Pass Band (3 db)	20	megacycles
Small Signal Gain	23	db
Noise Figure	12	db
Heater Voltage	6.3	Vdc
Heater Current	1.9	Adc
Cathode Voltage	-610	Vdc with respect to ground
Cathode Current	2.0	ma
Focus Voltage	-5	Vdc)
Anode No. 1 Voltage	+15	Vdc)
Anode No. 2 Voltage	+12	Vdc) with respect to cathode
Anode No. 3 Voltage	+80	Vdc)
Anode No. 4 Voltage	+200	Vdc)
Anode No. 5 Voltage)		
Helix No. 1 Voltage)		
Helix No. 2 Voltage)		Zero Volts (Ground)
Capsule Voltage)		
Collector Voltage	200	Volts with respect to ground
Focus Current	0	ma

Anode No. 1 Current	.10	ma
Anode No. 2 Current	.05	ma
Anode No. 3 Current	.03	ma
Anode No. 4 Current	.02	ma
Anode No. 5 Current	.03	ma
Helix No. 1 Current) Helix No. 2 Current) Capsule Current)	.05	ma
Collector Current	1.7	ma
Magnetic Field	700	gauss

Additional information for specific applications can be obtained from the:

Electron Tube Applications Section
ITT Components Division
P. O. Box 412
Clifton, New Jersey

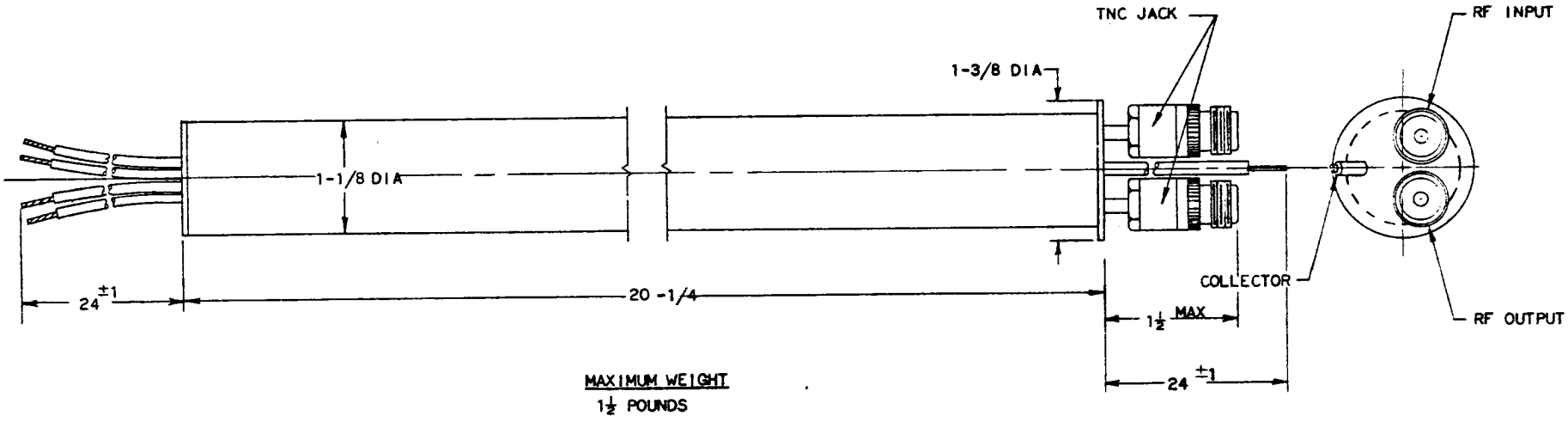

MAXIMUM WEIGHT
1½ POUNDS

LEADS

HEATERS	- BROWN
CATHODE	- YELLOW
FOCUS	- GREEN
ANODE NO. 1	- BLUE
ANODE NO. 2	- GREY
ANODE NO. 3	- PURPLE
ANODE NO. 4	- WHITE
ANODE NO. 5	- GROUND-BLACK
AMPL. HELIX NO. 1	- GROUND-BLACK
AMPL. HELIX NO. 2	- GROUND-BLACK
COLLECTOR	- RED

BACKWARD WAVE AMPLIFIER

TYPE X-397

ELECTRON TUBE DEPARTMENT ■ COMPONENTS DIVISION
INTERNATIONAL TELEPHONE AND TELEGRAPH CORPORATION, CLIFTON, NEW JERSEY

X-398* BACKWARD WAVE CONVERTER TUBE

T E N T A T I V E

GENERAL CHARACTERISTICS

The X-398 is a single tube designed to convert SHF signals in the band from 5700-8400 megacycles to a 320 megacycle intermediate frequency output signal.

The tube consists of a backward-wave amplifier and a backward wave oscillator in the same vacuum envelope. The r-f input signal is fed to the amplifier section where its level is increased and it mixes with the oscillator signal. Mixing is accomplished in the common electron beam that interacts with both r-f structures, to yield an i-f output signal which can be adjusted over a fairly large frequency range. This tube uses a 320 megacycle i-f.

The X-398 is a glass tube, mounted in an aluminum capsule. Solenoid focusing is required. A type "TNC" r-f input connector and a "TSM" i-f output connector are included as an integral part of the capsule. A type "TNC" l- output connector can be supplied if required.

ELECTRICAL DATA

Operating Frequency	5700-8400 megacycles
Bandwidth of Input Section	17-84 megacycles
Noise Figure	20 db
I-F Output	320 megacycles
Conversion Gain	Unity
Image Rejection	35 db

Note: The image rejection is dependent upon the intermediate frequency selected. This tube utilizes a 320 megacycle i-f, an increase in the i-f would result in a higher level of image rejection.

MECHANICAL DATA

Mounting Position	Any
Capsule Length	19 inches
Capsule Outside Diameter	7/8 inches
R-F Input Connector	Type "TNC" Coaxial, female
I-F Output Connector	Type "TSM" Coaxial, male
L-O Output Connector(if required)	Type "TNC" Coaxial female
D.C. Connections	Color coded flying leads.

*This number identifies a particular experimental tube design, such number and identification data being subject tochange without notice. This tube is for experimental purposes only, carries no obligation for future manufacture, and should not be used for design purposes without prior arrangement.

MAXIMUM RATINGS

Heater Voltage	6.5	Volts dc maximum	
Heater Current	2	Amperes maximum	
Cathode Voltage	-250 to -1300	Volts maximum	
Cathode Current	8	ma maximum	
Focus Voltage	0 to -10	Volts Maximum	with respect to cathode
Anode No. 1 Voltage	15 to 80	Volts Maximum	
Anode No. 2 Voltage	15 to 150	Volts Maximum	
Anode No. 3 Voltage	30 to 300	Volts Maximum	
Anode No. 4 Voltage	100 to 900	Volts Maximum	
Anode No. 5 Voltage Amplifier Helix No. 1 Voltage Amplifier Helix No. 2 Voltage Capsule Voltage	Zero Volts (Ground)		
Oscillator Helix Voltage	-50 to +100	Volts Maximum	
Collector Voltage	250	Volts maximum	
Focus Current	.3	ma maximum	
Anode No. 1 Current	.3	ma maximum	
Anode No. 2 Current	.3	ma maximum	
Anode No. 3 Current	.3	ma maximum	
Anode No. 4 Current	.3	ma maximum	
Anode No. 5 Current	.3	ma maximum	
Amplifier Helix No. 1 Current Amplifier Helix No. 2 Current Capsule Current	.5	ma maximum	
Oscillator Helix Current	.3	ma maximum	
Collector Current	8	ma maximum	
Solenoid Magnetic Field	900	ma maximum	

X-398
BACKWARD WAVE
CONVERTER TUBE

TYPICAL OPERATION

R-F Frequency	7000 megacycles
L-O Frequency	6680 megacycles
I-F Frequency	320 megacycles
Conversion Gain	+2 db
Heater Voltage	6.3 Volts dc
Heater Current	1.9 Amperes
Cathode Voltage	-640 Volts with respect to ground
Cathode Current	4.0 ma
Focus Voltage	0 Volts)
Anode No. 1 Voltage	49 Volts)
Anode No. 2 Voltage	62 Volts) with respect to cathode
Anode No. 3 Voltage	220 Volts)
Anode No. 4 Voltage	380 Volts)
Anode No. 5 Voltage)	
Amplifier Helix No. 1 Voltage)	
Amplifier Helix No. 2 Voltage)	0 Volts (Ground)
Capsule Voltage)	
Oscillator Helix Voltage	-25 Volts)
Collector Voltage	200 Volts) with respect to ground
Focus Current	0 ma
Anode No. 1 Current	.10 ma
Anode No. 2 Current	.08 ma
Anode No. 3 Current	.06 ma
Anode No. 4 Current	.06 ma
Anode No. 5 Current	.04 ma
Amplifier Helix No. 1 Current)	
Amplifier Helix No. 2 Current)	.08 ma
Capsule Current)	
Oscillator Helix Current	.02 ma
Collector Current	3.6 ma
Solenoid Magnetic Field	800 Gauss

Additional information for specific application can be obtained from the

Electron Tube Application Section
ITT Components Division
P.O. Box 412
Clifton, New Jersey

ELECTRON TUBE DEPARTMENT ■ COMPONENTS DIVISION
INTERNATIONAL TELEPHONE AND TELEGRAPH CORPORATION, CLIFTON, NEW JERSEY

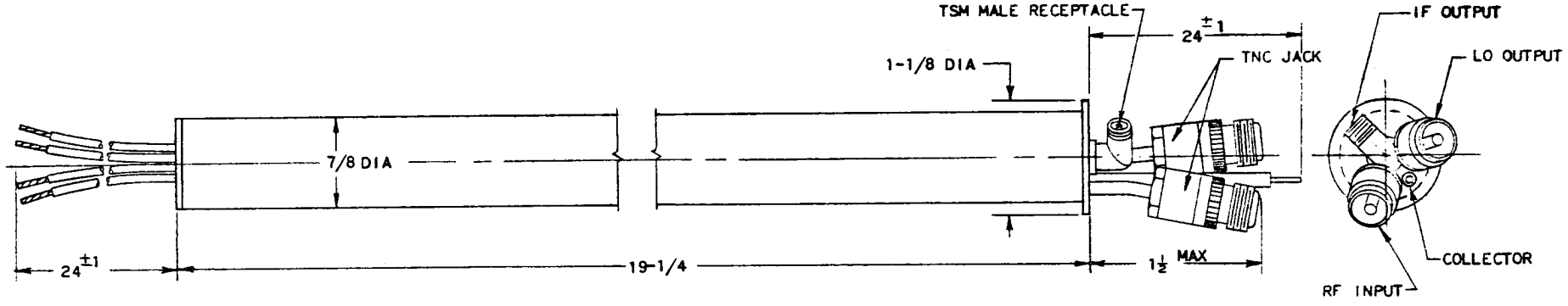

MAXIMUM WEIGHT
1-1/4 POUNDS

LEADS

HEATERS ——— BROWN
CATHODE ——— YELLOW
FOCUS ——— GREEN
ANODE NO. 1 ——— BLUE
ANODE NO. 2 ——— GREY
ANODE NO. 3 ——— PURPLE
ANODE NO. 4 ——— WHITE
ANODE NO. 5
AMPL. HELIX NO. 1
AMPL. HELIX NO. 2 ——— GROUND-BLACK
COLLECTOR ——— RED
OSCILLATOR HELIX - INNER CONDUCTOR OF L O OUTPUT JACK

BACKWARD WAVE CONVERTER

TYPE X-398

ELECTRON TUBE DEPARTMENT ■ COMPONENTS DIVISION
INTERNATIONAL TELEPHONE AND TELEGRAPH CORPORATION, CLIFTON, NEW JERSEY

X-399* BACKWARD WAVE AMPLIFIER TUBE

T E N T A T I V E

GENERAL CHARACTERISTICS

The X-399 is a C-band backward wave amplifier tube with a helical wave propagation structure employing continuous beam operation. The tube is designed for use as a narrow band medium noise r-f amplifier with a pass band that can be electronically tuned over the frequency range of 5700 to 8400 megacycles.

The X-399 is a glass envelope tube mounted in an aluminum capsule and requires a solenoid to focus the electron beam. Type "TNC" female r-f connectors are included as an integral part of the capsule.

ELECTRICAL DATA

Frequency Range	5700 - 8400 megacycles
Pass Band (3 db)	11 - 45 megacycles
Small Signal Gain	20 db minimum
Noise Figure	15 db maximum

MECHANICAL DATA

Mounting Position	Any
Capsule Length	16 inches
Capsule Diameter	7/8 inches
Net Weight	1 pound
R-F connectors	Type "TNC" female
D.C. Connections	Color Coded Flying Leads
Cooling	Not Required

*This number identifies a particular experimental tube design, such number and identification data being subject to change without notice. This tube is for experimental purposes only, carries no obligation for future manufacture and should not be used for design purposes without prior arrangement.

MAXIMUM RATINGS

Heater Voltage	6.5 Volts dc maximum
Heater Current	2 Amperes maximum
Cathode Voltage	-250 to -1200 Volts maximum
Cathode Current	4 ma maximum
Focus Voltage	-10 to +10 Volts maximum)
Anode No. 1 Voltage	+5 to +80 Volts maximum)
Anode No. 2 Voltage	+5 to +150 Volts maximum) with respect
Anode No. 3 Voltage	+20 to +300 Volts maximum) to cathode
Anode No. 4 Voltage	+90 to +800 Volts maximum)
Anode No. 5 Voltage)	
Helix No. 1 Voltage)	
Helix No. 2 Voltage)	Zero Volts (Ground)
Capsule Voltage)	
Collector Voltage	250 Volts maximum
Focus Current	.2 ma maximum
Anode No. 1 Current	.2 ma maximum
Anode No. 2 Current	.2 ma maximum
Anode No. 3 Current	.2 ma maximum
Anode No. 4 Current	.2 ma maximum
Anode No. 5 Current	.2 ma maximum
Helix No. 1 Current)	
Helix No. 2 Current)	.3 ma maximum
Capsule Current)	
Collector Current	4 ma maximum
Solenoid Magnetic Field	900 Gauss maximum

TYPICAL OPERATION

Frequency (Center of Pass Band)	7000 megacycles
Pass Band (3 db)	28 megacycles
Small Signal Gain	22 db
Noise Figure	14 db
Heater Voltage	6.3 Vdc
Heater Current	1.9 Adc
Cathode Voltage	-640 Vdc with respect to ground
Cathode Current	2.0 ma
Focus Voltage	-6 Vdc)
Anode No. 1 Voltage	+10 Vdc) with respect to cathode
Anode No. 2 Voltage	+8 Vdc)
Anode No. 3 Voltage	+260 Vdc)
Anode No. 4 Voltage	+350 Vdc)
Anode No. 5 Voltage)	
Helix No. 1 Voltage)	Zero Volts (Ground)
Helix No. 2 Voltage)	
Capsule Voltage)	
Collector Voltage	200 Volts with respect to ground.
Focus Current	0 ma

Anode No. 1 Current	.1 ma
Anode No. 2 Current	.08 ma
Anode No. 3 Current	.03 ma
Anode No. 4 Current	.02 ma
Anode No. 5 Current	.02 ma
Helix No. 1 Current) Helix No. 2 Current) Capsule Current)	.03 ma
Collector Current	1.7 ma
Magnetic Field	800 gauss

Additional information for specific applications can be obtained from the

Electron Tube Applications Section
ITT Components Division
P.O. Box 412
Clifton, New Jersey

ELECTRON TUBE DEPARTMENT ■ COMPONENTS DIVISION
INTERNATIONAL TELEPHONE AND TELEGRAPH CORPORATION, CLIFTON, NEW JERSEY

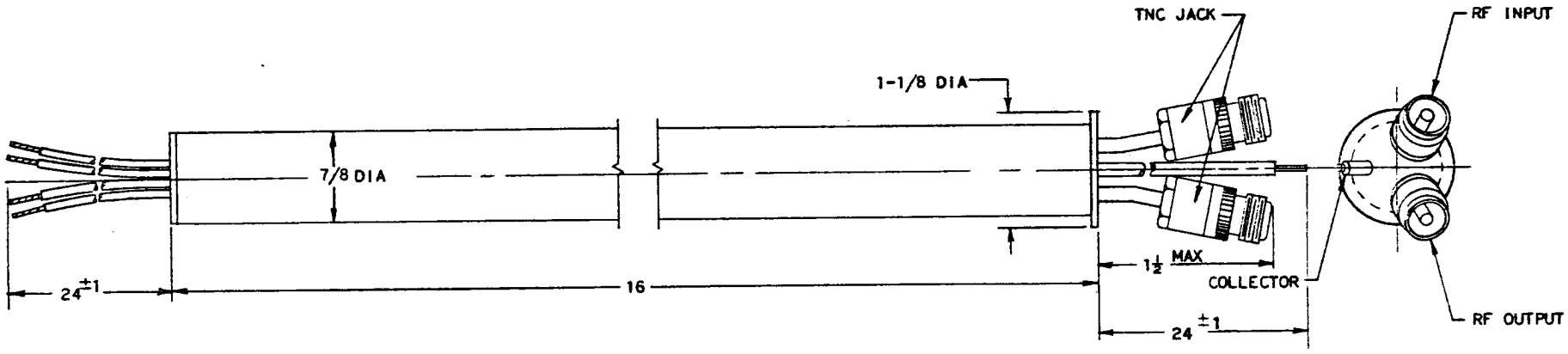

MAXIMUM WEIGHT
1 POUND

LEADS

HEATERS	- BROWN
CATHODE	- YELLOW
FOCUS	- GREEN
ANODE NO. 1	- BLUE
ANODE NO. 2	- GREY
ANODE NO. 3	- PURPLE
ANODE NO. 4	- WHITE
ANODE NO. 5	
AMPL. HELIX NO. 1	— GROUND-BLACK
AMPL. HELIX NO. 2	
COLLECTOR	- RED

BACKWARD WAVE AMPLIFIER

TYPE X-399

ELECTRON TUBE DEPARTMENT ■ COMPONENTS DIVISION
INTERNATIONAL TELEPHONE AND TELEGRAPH CORPORATION, CLIFTON, NEW JERSEY

X-400* BACKWARD WAVE CONVERTER TUBE

TENTATIVE

GENERAL CHARACTERISTICS

The X-400 is a single tube designed to convert SHF signals in the band from 8000-12,700 megacycles to a 480 megacycle intermediate frequency output signal.

The tube consists of a backward-wave amplifier and a backward wave oscillator in the same vacuum envelope. The r-f input signal is fed to the amplifier section where its level is increased and it mixes with the oscillator signal. Mixing is accomplished in the common electron beam that interacts with both r-f structures, to yield an i-f output signal which can be adjusted over a fairly large frequency range. This tube uses a 480 megacycle i-f.

The X-400 is a glass tube, mounted in an aluminum capsule. Solenoid focusing is required. A type "TNC" r-f input connector and a "TSM" i-f output connector are included as an integral part of the capsule. A type "TNC" l-o output connector can be supplied if required.

ELECTRICAL DATA

Operating Frequency	8000-12,700 megacycles
Bandwidth of Input Section	25-127 megacycles
Noise Figure	20 db
I-F Output	480 megacycles
Conversion Gain	Unity
Image Rejection	35 db

Note: The image rejection is dependent upon the intermediate frequency selected. This tube utilizes a 480 megacycle i-f, an increase in the i-f would result in a higher level of image rejection.

MECHANICAL DATA

Mounting Position	Any
Capsule Length	17 inches
Capsule Outside Diameter	7/8 inches
R-F Input Connector	Type "TNC" Coaxial, female
I-F Output Connector	Type "TSM" Coaxial, male
L-O Output Connector (if required)	Type "TNC" Coaxial, female
D.C. Connections	Color coded flying leads

*This number identifies a particular experimental tube design, such number and identification data being subject to change without notice. This tube is for experimental purposes only, carries no obligation for future manufacture, and should not be used for design purposes without prior arrangement.

MAXIMUM RATINGS

Heater Voltage	6.5 Volts dc maximum
Heater Current	2 Amperes maximum
Cathode Voltage	-250 to -1500 Volts maximum
Cathode Current	8 ma maximum
Focus Voltage	0 to -10 Volts maximum)
Anode No. 1 Voltage	5 to 100 Volts maximum) With respect
Anode No. 2 Voltage	10 to 150 Volts maximum) to cathode
Anode No. 3 Voltage	30 to 300 Volts maximum)
Anode No. 4 Voltagd	70 to 900 Volts maximum)
Anode No. 5 Voltage)	
Amplifier Helix No. 1 Voltage)	
Amplifier Helix No. 2 Voltage)	Zero Volts (Ground)
Capsule Voltage)	
Oscillator Helix Voltage	-50 to +100 Volts maximum
Collector Voltage	250 Volts maximum
Focus Current	.3 ma maximum
Anode No. 1 Current	.3 ma maximum
Anode No. 2 Current	.3 ma maximum
Anode No. 3 Current	.3 ma maximum
Anode No. 4 Current	.3 ma maximum
Anode No. 5 Current	.3 ma maximum
Amplifier Helix No. 1 Current)	
Amplifier Helix No. 2 Current)	.5 ma maximum
Capsule Current)	
Oscillator Helix Current	.3 ma maximum
Collector Current	8 ma maximum
Solenoid Magnetic Field	1000 Gauss maximum

TYPICAL OPERATION

R-F Frequency	10,000 megacycles
L-O Frequency	9,520 megacycles
I-F Frequency	480 megacycles
Conversion Gain	0 db
Heater Voltage	6.3 Volts dc
Heater Current	1.9 Amperes
Cathode Voltage	-650 Volts with respect to ground
Cathode Current	4.0 ma
Focus Voltage	0 Volts)
Anode No. 1 Voltage	+40 Volts)
Anode No. 2 Voltage	+55 Volts) with respect to cathode
Anode No. 3 Voltage	+90 Volts)
Anode No. 4 Voltage	+250 Volts)
Anode No. 5 Voltage	0 Volts (Ground)

Amplifier Helix No. 1 Voltage)	0 Volts (Ground)
Amplifier Helix No. 2 Voltage)	
Capsule Voltage)	
Oscillator Helix Voltage	-40 Volts)
Collector Voltage	200 Volts) with respect to ground
Focus Current	0 ma
Anode No. 1 Current	.06 ma
Anode No. 2 Current	.05 ma
Anode No. 3 Current	.05 ma
Anode No. 4 Current	.06 ma
Anode No. 5 Current	.04 ma
Amplifier Helix No. 1 Current)	
Amplifier Helix No. 2 Current)	.08 ma
Capsule Current)	
Oscillator Helix Current	.02 ma
Collector Current	3.6 ma
Solenoid Magnetic Field	900 Gauss

Additional information for specific application can be obtained from the

Electron Tube Application Section
ITT Components Division
P.O. Box 412
Clifton, New Jersey

ELECTRON TUBE DEPARTMENT ■ COMPONENTS DIVISION
INTERNATIONAL TELEPHONE AND TELEGRAPH CORPORATION, CLIFTON, NEW JERSEY

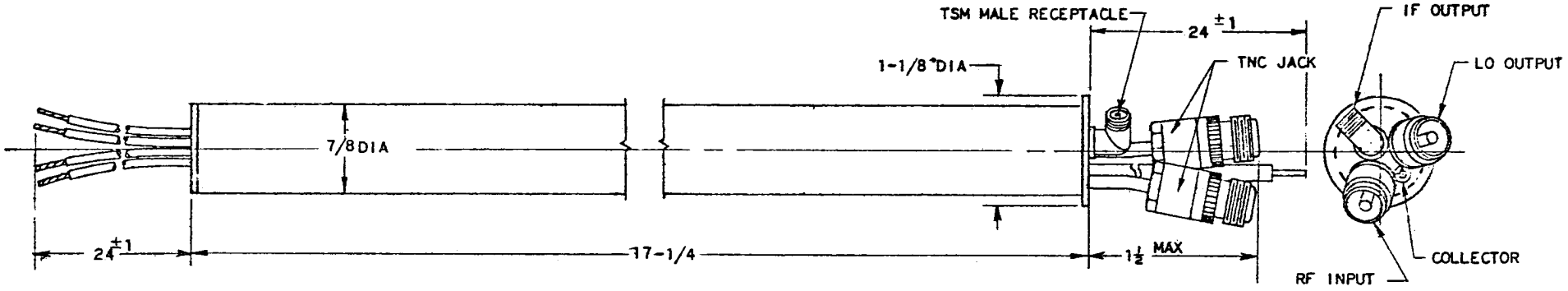

MAXIMUM WEIGHT

1 POUND

LEADS

HEATERS	- BROWN
CATHODE	- YELLOW
FOCUS	- GREEN
ANODE NO. 1	- BLUE
ANODE NO. 2	- GREY
ANODE NO. 3	- PURPLE
ANODE NO. 4	- WHITE
ANODE NO. 5	
AMPL. HELIX NO. 1	— GROUND-BLACK
AMPL. HELIX NO. 2	
COLLECTOR	- RED

OSCILLATOR HELIX - INNER CONDUCTOR OF L O OUTPUT JACK

BACKWARD WAVE AMPLIFIER

TYPE X-400

X-401*
BACKWARD WAVE AMPLIFIER TUBE

T E N T A T I V E

GENERAL CHARACTERISTICS

The X-401 is an X-band backward wave amplifier tube with a helical wave propagation structure employing continuous beam operation. The tube is designed for use as a narrow band medium noise r-f amplifier with a pass band that can be electronically tuned over the frequency range of 8,000 to 12,700 megacycles.

The X-401 is a glass envelope tube mounted in an aluminum capsule and requires a solenoid to focus the electron beam. Type "TNC" female r-f connectors are included as an integral part of the capsule.

ELECTRICAL DATA

Frequency Range	8,000 to 12,700 megacycles
Pass Band (3 db)	16-65 megacycles
Small Signal Gain	20 db minimum
Noise Figure	15 db maximum

MECHANICAL DATA

Mounting Position	Any
Capsule Length	16 inches
Capsule Diameter	7/8 inches
Net Weight	1 pound
R-F Connectors	Type "TNC" Female
D.C. Connections	Color Coded Flying Leads
Cooling	Not Required

*This number identifies a particular experimental tube design, such number and identification data being subject to change without notice. This tube is for experimental purposes only, carries no obligation for future manufacture and should not be used for design purposes without prior arrangement.

MAXIMUM RATINGS

Heater Voltage	6.5	Volts dc maximum	
Heater Current	2	Amperes maximum	
Cathode Voltage	-250 to -1450	Volts maximum	
Cathode Current	4	ma maximum	
Focus Voltage	-10 to +10	Volts maximum)	
Anode No. 1 Voltage	5 to 100	Volts maximum)	with respect to cathode
Anode No. 2 Voltage	5 to 150	Volts maximum)	
Anode No. 3 Voltage	30 to 300	Volts maximum)	
Anode No. 4 Voltage	70 to 800	Volts maximum)	
Anode No. 5 Voltage)			
Helix No. 1 Voltage)	Zero Volts (Ground)		
Helix No. 2 Voltage)			
Capsule Voltage)			
Collector Voltage	250	Volts maximum	
Focus Current	.2	ma maximum	
Anode No. 1 Current	.2	ma maximum	
Anode No. 2 Current	.2	ma maximum	
Anode No. 3 Current	.2	ma maximum	
Anode No. 4 Current	.2	ma maximum	
Anode No. 5 Current	.2	ma maximum	
Helix No. 1 Current)			
Helix No. 2 Current)	.3	ma maximum	
Capsule Current)			
Collector Current	4	ma maximum	
Solenoid Magnetic Field	1000	Gauss maximum	

TYPICAL OPERATION

Frequency (Center of Pass Band)	10,000 megacycles
Pass Band (3 db)	40 megacycles
Small Signal Gain	25 db
Noise Figure	13 db
Heater Voltage	6.3 Vdc
Heater Current	1.9 Adc
Cathode Voltage	-650 Vdc with respect to ground
Cathode Current	2.0 ma
Focus Voltage	-8 Vdc)
Anode No. 1 Voltage	+20 Vdc)
Anode No. 2 Voltage	+18 Vdc) with respect to ground
Anode No. 3 Voltage	+80 Vdc)
Anode No. 4 Voltage	+230 Vdc)
Anode No. 5 Voltage)	
Helix No. 1 Voltage)	Zero Volts (Ground)
Helix No. 2 Voltage)	
Capsule Voltage)	
Collector Voltage	200 Volts with respect to ground
Focus Current	0 ma
Anode No. 1 Current	.10 ma
Anode No. 2 Current	.03 ma
Anode No. 3 Current	.02 ma
Anode No. 4 Current	.02 ma
Anode No. 5 Current	.01 ma
Helix No. 1 Current)	
Helix No. 2 Current)	.10 ma
Capsule Current)	
Collector Current	1.7 ma
Magnetic Field	900 Gauss

Additional information for specific applications can be obtained from the

Electron Tube Applications Section
ITT Components Division
P. O. Box 412
Clifton, New Jersey

ELECTRON TUBE DEPARTMENT ■ COMPONENTS DIVISION
INTERNATIONAL TELEPHONE AND TELEGRAPH CORPORATION, CLIFTON, NEW JERSEY

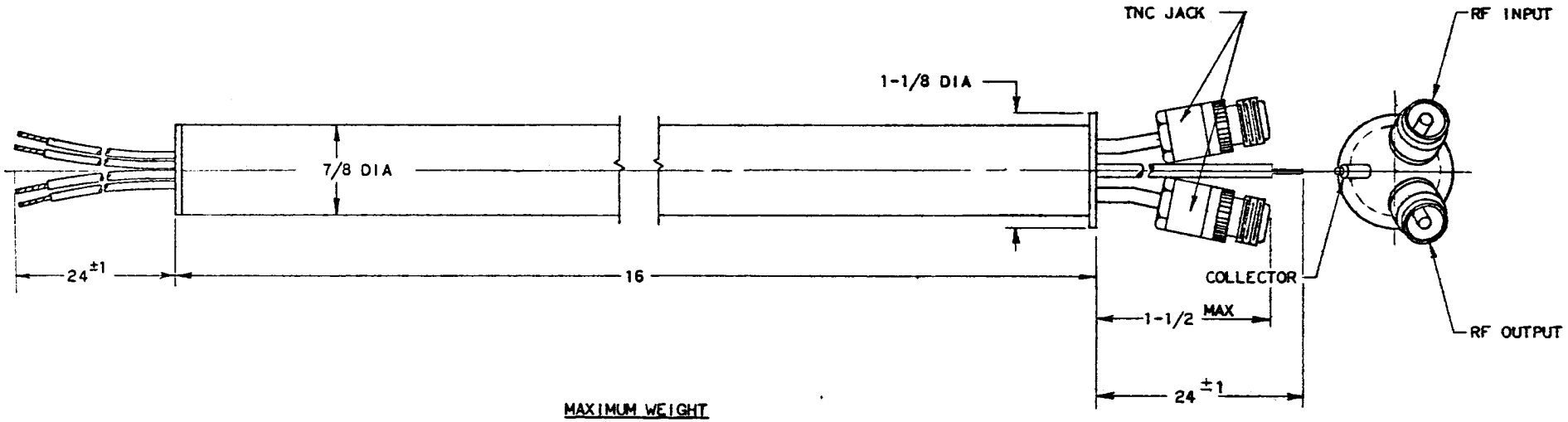

MAXIMUM WEIGHT
1 POUND

LEADS

HEATERS	- BROWN
CATHODE	- YELLOW
FOCUS	- GREEN
ANODE NO. 1	- BLUE
ANODE NO. 2	- GREY
ANODE NO. 3	- PURPLE
ANODE NO. 4	- WHITE
ANODE NO. 5	
AMPL. HELIX NO. 1	GROUND-BLACK
AMPL. HELIX NO. 2	
COLLECTOR	- RED

BACKWARD WAVE AMPLIFIER

TYPE X-401

U.H.F Power Klystrons

Provisional Data

Z153/50Z
Z163/50Z
Z173/50Z

These klystrons are intended for use as final amplifiers in the vision and sound sections of u.h.f. t.v. transmitters: they are also suitable for t.v. transposer service.

The tubes are of the four-integral cavity type and are magnetically focussed. Incorporated is a modulating anode for beam current control which enables the tubes to be operated at lower power levels in sound transmitters whilst using the same beam voltage supply as the vision amplifier klystrons: in addition, the electrode may be used as a protective device for vision operation.

Each tube operates in an approved focus mount assembly, incorporating the focus electromagnet system in which the klystron will give the performance specified in these data sheets.

Whilst the three tubes have similar electrical characteristics and performances, each covers a different frequency range, as follows:

Klystron	Mount	Frequency range (MHz)
Z153/50Z	ZM153	470 to 598
Z163/50Z	ZM163	598 to 710
Z173/50Z	ZM173	710 to 854

In transmitters using a third klystron for combined vision and sound signals as an emergency reserve, the tubes are suitable for operation at 2,5kW peak sync. power output, where the vision/sound powers ratio is 5:1.

If required, the tubes can be supplied already broadband tuned for vision operation in specified channels.

A special feature of these tubes is that they are designed to fit into the existing sockets of the following ITT external-cavity klystrons, or the sockets of similar tubes of other manufacturers which use the same types of mount assemblies:

Z151/50Z used in ZM151 mount
Z161/50Z used in ZM161 mount
Z171/50Z used in ZM171 mount

The conversion of existing mounts to accept the Z153/50Z series of tubes can be effected very simply by the use of available small kits of accessories.(See page 10).

Abridged Data

Power output, saturated	(kW)	15
Power gain, typical	(dB)	43
Bandwidth	(MHz)	8,0
Beam voltage	(kV)	13
Output connection		
special quick-fit for EIA 1,625 inch rigid coaxial line (50Ω)		
Cooling		
collector		vapour
gun and tube body		forced air

Cathode/Heater

Cathode		indirectly heated
Heater voltage, min. (Note1)	(V)	5,0
Heater current range	(A)	38 to 44
Heater starting current, peak, max.	(A)	84
Cathode heating time	(min)	5,0

Note 1. New tubes should be operated at 5,0V. Heater voltage may have to be increased to 5,5V max. as life progresses.

July 1972

Z153/50Z
Z163/50Z-1
Z173/50Z

© 1972 International Telephone and Telegraph Corporation

MAXIMUM (ABSOLUTE) RATINGS (No individual rating should be exceeded)

Beam voltage, continuous	(kV)	14	Collector dissipation	(kW)	45
Beam current, mean	(A)	3,5	Load VSWR (Note 2)		1,5:1
Body current					
with zero input power	(mA)	50			
at saturated power output	(mA)	150			
Power output, saturated	(kW)	18			

Note 2. Tubes will operate at this figure without damage but satisfactory t.v. operation can be assured only if load VSWR does not exceed 1,1:1 .

TYPICAL OPERATING CONDITIONS — Television Vision Amplifier Service (For T.V. transmitter giving sync. power output of 12,5kW)

Z153/50Z in ZM153 Mount

Frequency range	(MHz)	470-478	526-534	590-598
Channel		21	28	36
Beam voltage	(kV)	13	13	13
Beam current	(A)	3,0	3,0	3,0
Modulating anode voltage	(kV)	13	13	13
Modulating anode current	(mA)	1,0	1,0	1,0
Electromagnet current (Note 3)	(A)	12,2	11,8	11,5
Bandwidth (Notes 4,5)	(MHz)	8,0	8,0	8,0
Body current (Note 6)				
with zero input power	(mA)	15	14	13
black level, +sync. (11kW)	(mA)	24	23	21
at 12,5kW c.w. output, vision frequency	(mA)	30	34	36
Drive power (Notes 7,8)				
at 12,5kW output	(W)	0,45	0,35	0,35
at 10kW output	(W)	0,32	0,27	0,27
Power gain (Note 8)	(dB)	44,4	45,5	45,5
Differential gain (Notes 4,9)	(%)	74	72	70
Differential phase (Notes 4,10)	(°)	6,5	4,5	5,0
AM noise (Note 11)	(dB)	60	60	60
Linearity (Notes 4,12)	(%)	74	73	72
Power output, saturated (Note 8)	(kW)	16	15,5	15
Efficiency (Notes 8,13)	(%)	32	32	32

(Notes are given on pages 8 and 9)

Z163/50Z in ZM163 Mount

Frequency range	(MHz)	598-606	654-662	702-710
Channel		37	44	50
Beam voltage	(kV)	13	13	13
Beam current	(A)	3,0	3,0	3,0
Modulating anode voltage	(kV)	13	13	13
Modulating anode current	(mA)	1,0	1,0	1,0
Electromagnet current (Note 3)	(A)	11	11,2	11,4
Bandwidth (Notes 4,5)	(MHz)	8,0	8,0	8,0

Z163/50Z in ZM163 Mount – continued

Body current (Note 6)				
with zero power input	(mA)	14	15	15
black level, +sync. (11kW)	(mA)	23	24	25
at 12,5kW c.w. output, vision frequency	(mA)	30	32	36
Drive power (Notes 7,8)				
at 12,5kW output	(W)	0,45	0,35	0,34
at 10kW output	(W)	0,33	0,28	0,27
Power gain (Note 8)	(dB)	44,4	45,5	45,6
Differential gain (Notes 4,9)	(%)	73	76	74
Differential phase (Notes 4,10)	(°)	7,0	4,5	5,6
AM noise (Note 11)	(dB)	60	60	60
Linearity (Notes 4,12)	(%)	75	77	76
Power output, saturated (Note 8)	(kW)	16	16,5	16
Efficiency (Notes 8,13)	(%)	32	32	32

Z173/50Z in ZM173 Mount

Frequency range	(MHz)	710-718	782-790	846-854
Channel		51	60	68
Beam voltage	(kV)	13	13	13
Beam current	(A)	3,0	3,0	3,0
Modulating anode voltage	(kV)	13	13	13
Modulating anode current	(mA)	1,0	1,1	0,8
Electromagnet current (Note 3)	(A)	11	11,2	11,2
Bandwidth	(MHz)	8,0	8,0	8,0
Body current (Note 6)				
with zero input power	(mA)	12	14	15
black level, +sync. (11kW)	(mA)	17	21	24
at 12,5kW c.w. output, vision frequency	(mA)	30	33	34
Drive power (Notes 7,8)				
at 12,5kW output	(W)	0,4	0,35	0,3
at 10kW output	(W)	0,32	0,27	0,23
Power gain (Note 8)	(dB)	44,9	45,5	46,1
Differential gain (Notes 4,9)	(%)	70	70	72
Differential phase (Notes 4,10)	(°)	5,0	4,5	6,5
AM noise (Note 11)	(dB)	61	60,7	61
Linearity (Notes 4,12)	(%)	70	70	75
Power output, saturated (Note 8)	(kW)	14,5	14,5	16
Efficiency (Notes 8,13)	(%)	32	32	32

(Notes are given on pages 8 and 9)

TYPICAL OPERATING CONDITIONS — Television Sound Amplifier Service (For T.V. transmitter giving 2,5kW power output) (Note 16)

Z153/50Z in ZM153 Mount

Frequency range	(MHz)	470-478	526-534	590-598
Channel		21	28	36
Beam voltage	(kV)	13	13	13
Beam current	(A)	0,65	0,65	0,65
Modulating anode voltage	(kV)	4,6	4,6	4,6
Modulating anode current	(mA)	0	0	0
Electromagnet current (Note 3)	(A)	10	10,1	10,3
Bandwidth to 1,0dB points (Note 14)	(MHz)	0,5	0,5	0,5
Body current (Note 15) with zero power input	(mA)	5,0	5,4	5,0
at 2,5kW power output, sound frequency	(mA)	7,0	7,5	7,3
Drive power (Note 7) at 2,5kW power output	(W)	0,08	0,10	0,09
Efficiency, min.	(%)	30	30	30

(Notes 3 to 15 are given on pages 8 and 9).

Z163/50Z in ZM163 Mount

Frequency range	(MHz)	598-606	654-662	702-710
Channel		37	44	50
Beam voltage	(kV)	13	13	13
Beam current	(A)	0,65	0,65	0,65
Modulating anode voltage	(kV)	4,6	4,6	4,6
Modulating anode current	(mA)	0	0	0
Electromagnet current (Note 3)	(A)	10,3	10,2	10,3
Bandwidth (Note 14)	(MHz)	0,5	0,5	0,5
Body current (Note 15) with zero input power	(mA)	5,0	4,5	3,5
at 2,5KW output, sound frequency	(mA)	8,0	8,5	9,0
Drive power (Note 7) at 2,5kW output	(W)	0,09	0,11	0,10
Efficiency, min.	(%)	30	30	30

Z173/50Z in ZM173 Mount

Frequency range	(MHz)	710-718	782-790	846-854
Channel		51	60	68
Beam voltage	(kV)	13	13	13
Beam current	(A)	0,65	0,65	0,65
Modulating anode voltage	(kV)	4,6	4,5	4,55
Modulating anode current	(mA)	0	0	0
Electromagnet current (Note 3)	(A)	10,4	10,5	10,7
Bandwidth (Note 14)	(MHz)	0,5	0,5	0,5

Z173/50Z in ZM173 Mount – continued

Body current (Note 15)				
with zero input power	(mA)	4,0	4,5	3,0
at 2,5kW input power, sound frequency	(mA)	8,0	9,5	8,7
Drive power (Note 7)				
at 2,5kW power output	(W)	0,11	0,14	0,13
Efficiency, min.	(%)	30	30	30

TYPICAL OPERATING CONDITIONS — Television Combined Vision and Sound Service (For T.V. transmitter giving power outputs of 2,25kW vision and 0,45kW sound)

Information regarding operation at reduced power levels is available on request from the manufacturer.

Z153/50Z in ZM153 Mount

Frequency	(MHz)	470-478	526-534	590-598
Channel		21	28	36
Beam voltage	(kV)	12,5	12,5	12,5
Beam current	(A)	2,9	2,9	2,9
Modulating anode voltage	(kV)	12,5	12,5	12,5
Modulating anode current	(mA)	1,0	1,0	1,0
Electromagnet current (Note 3)	(A)	10,8	11,2	11,4
Bandwidth (Note 17)	(MHz)	8,0	8,0	8,0
Body current				
with zero input power	(mA)	10	11	12,5
at 2,5kW output, vision frequency	(mA)	11,5	13	14
Drive power (Notes 8,18)				
at 2,5kW power output	(W)	0,1	0,12	0,11
Intermodulation products (Note 19)	(dB)	-50,5	-51	-51,5

Z163/50Z in ZM163 Mount

Frequency	(MHz)	598-606	654-662	702-710
Channel		37	44	50
Beam voltage	(kV)	12,5	12,5	12,5
Beam current	(A)	2,9	2,9	2,9
Modulating anode voltage	(kV)	12,5	12,5	12,5
Modulating anode current	(mA)	1,0	1,0	1,0
Electromagnet current (Note 3)	(A)	10,8	10,4	10,7
Bandwidth (Note 17)	(MHz)	8,0	8,0	8,0
Body current				
with zero input power	(mA)	11	12	11,5
at 2,5kW output, vision frequency	(mA)	12	13,5	12,8
Drive power (Notes 8,18)				
at 2,5kW power output	(W)	0,1	0,13	0,13
Intermodulation products (Note 19)	(dB)	-50,5	-51	-51,5

(Notes are given on pages 8 and 9)

TYPICAL OPERATING CONDITIONS — Television Combined Vision and Sound — continued

Z173/50Z in ZM173 Mount

Frequency	(MHz)	710–718	782–790	846–854
Channel		51	60	68
Beam voltage	(kV)	12,5	12,5	12,5
Beam current	(A)	2,9	2,9	2,9
Modulating anode voltage	(kV)	12,5	12,5	12,5
Modulating anode current	(mA)	1,0	1,2	1,5
Electromagnet current (Note 3)	(A)	10,4	10,8	11,2
Bandwidth	(MHz)	8,0	8,0	8,0
Body current with zero input power	(mA)	11	12,5	13
at 2,5kW output, vision frequency	(mA)	13	14	13,9
Drive power (Notes 8, 18) at 2,5kW power output	(W)	0,1	0,09	0,095
Intermodulation products (Note 19)	(dB)	-51,5	-51	-50,5

RANGE OF CHARACTERISTICS FOR EQUIPMENT DESIGN

Z153/50Z in ZM153 Mount — Vision Amplifier Service

Test Conditions

Heater voltage	(V)	5,0/5,5
Electromagnet current	(A)	9,0/13
Frequency range	(MHz)	470–598
Bandwidth (Note 5)	(MHz)	8,0
Power output (Note 23)	(kW)	12,5

Range of Characteristics

		min.	max.
Heater current	(A)	38	44
Beam voltage	(kV)	-	14
Body current (Note 6)	(mA)	-	150
Mod. anode current	(mA)	-	5,0
R.F. drive power (Note 7)	(W)	-	1,25
Efficiency (Note 13)	(%)	32	-

Z163/50Z in ZM163 Mount — Vision Amplifier Service

Test Conditions

Heater voltage	(V)	5,0/5,5
Electromagnet current	(A)	9,0/13
Frequency range	(MHz)	598–710
Bandwidth (Note 5)	(MHz)	8,0
Power output (Note 23)	(kW)	12,5

Range of Characteristics

		min.	max.
Heater current	(A)	38	44
Beam voltage	(kV)	-	14
Body current (Note 6)	(mA)	-	150
Mod. anode current	(mA)	-	5,0
R.F. drive power (Note 7)	(W)	-	1,25
Efficiency (Note 13)	(%)	32	-

Z173/50Z in ZM173 Mount — Vision Amplifier Service

Test Conditions

Heater voltage	(V)	5,0/5,5
Electromagnet current	(A)	9,0/13
Frequency range	(MHz)	710–854
Bandwidth (Note 5)	(MHz)	8,0
Power output (Note 23)	(kW)	12,5

Range of Characteristics

		min.	max.
Heater current	(A)	38	44
Beam voltage	(kV)	–	14
Body current (Note 6)	(mA)	–	150
Mod. anode current	(mA)	–	5,0
R.F. drive power (Note 7)	(W)	–	1,25
Efficiency (Note 13)	(%)	32	–

MECHANICAL DATA – Klystrons

	(mm.)	(in.)
Length overall, max.		
Z153/50Z		44,125
Z163/50Z		40,1
Z173/50Z		40,1
Diameter overall, max.		
Weight, nett., approx.	(kg)	(lb)
Z153/50Z	84	185
Z163/50Z	75	165
Z173/50Z	57	125

Mounting position, all tubes vertical, collector downwards

MOUNT ASSEMBLIES – General Data

Electromagnet		
voltage	(V)	100
current (Note 24)	(A)	9,0/13
resistance at 20°C ambient		
cold	(Ω)	5,7
hot	(Ω)	7,3

R.F. connectors

input Type N coaxial panel jack (50Ω); mates with UG-21D/U or equivalent

output Special quick-fit for EIA 1,625in. rigid 50Ω line or 3,125in. coaxial line if preferred

Weight of assembly, nett. approx.	kg	lb
ZM153	354	780
ZM163	354	780
ZM173	354	780

COOLING DATA

Volume of steam produced by collector dissipation	(m^3/min/kW)	0,043
	(ft^3/min/kW)	1,5
Volume of water converted into steam	(l/min/kW)	0,027
	(UK gal/min/kW)	0,006
Boiler feed water for operation at 12,5kW peak sync. output, min.	(l/min)	2,27
	(UK gal/min)	0,5
Air flow for gun envelope and tube body, min. (Note 25)	(m^3/min)	2,83
	(ft^3/min)	100
Static pressure head (water gauge) at 2,83m^3/min. (100ft^3/min) (Note 26)	(mm)	51
	(in)	2,0
Inlet air temperature, max.	(°C)	45
Max. permissible temperature of any part of klystron	(°C)	175

(Notes are given on pages 8 and 9)

Notes

Note 3. Individual tubes should be operated at the value specified in the test data sheet supplied with the tube.

Note 4. For the purpose of defining bandwidth, differential gain and differential phase, the following carrier output amplitude levels are assumed:

Peak sync. level	100%
Black level	76%
Peak white level	20%

Note 5(a). The klystron broadband response will be adjusted by using a c.w. swept input signal corresponding to mid-grey output level (42% of carrier amplitude) so that the portion of the band 3,0MHz either side of the band centre at f_V + 2,0MHz shall be level to within ± 0,5dB of the level at f_V. Band edges at f_V - 2,0MHz and f_V + 6,0MHz shall be within the range 0,5dB to -1,0dB of the level at f_V.

Note 5(b). As the amplitude of the swept input is varied between the levels corresponding to white and sync. level at the output of the klystron, the portion of the band 3,0MHz either side of the band centre shall remain within ±1,0dB of the level at f_V.

Note 6. When vision and sound klystrons are operated from a common h.t. supply a combined body current max. value of 150mA applies. However, for normal operation with a composite programme signal consisting of peak sync. pulses, blanking level and picture information, the combined body currents should be less than 50mA; if it is greater than this, operating conditions should be carefully checked to detect abnormal adjustments.

Note 7. Defined as the power delivered to a matched load substituted for the input terminal of the klystron.

Note 8. For full specified performance at 12,5kW, saturated output power is typically 14kW. If the klystron is required to be used as a c.w. amplifier, the maximum permitted output power is 8,0kW.

Note 9. With a test wave-form similar to that described in Note 12, but with sine waves of 4,43MHz and peak-to-peak amplitude of 10% of black to white separation, superimposed on each step of the staircase from black level to peak white, the ratio of the minimum to maximum amplitude of the sine waves, after passing the demodulated waveform at the output of the klystron through a suitable band-pass filter, shall not be less than 0,7. The results obtained from these tests will be in the form of a smooth curve of varying slope and without inflections greater than 3%.

Note 10. Phase response. With the test wave-form described in Note 9 above, the phase of the 4,43MHz sine wave signal on any step shall not differ by more than 10% from the 4,43MHz signal at black level. The results obtained from this test will be in the form of a smooth curve of varying slope and without inflections greater than 2°.

Note 11. A.M. noise. There shall be no random or periodic noise generated within the klystron and having a level greater than -60dB as measured as a peak-to-peak voltage referred to the rectified

level of the peak sync. signal. With the focus current adjusted for minimum noise, the -60dB performance will hold over a range of ±5% of the focus current optimum value.

Note 12. Linearity. The linearity of the klystron, when operating at a peak sync. output power level of 12,5kW, will be such that a video test waveform consisting of a 10-step staircase from black to white level occurring on each line, the ratio of the minimum step amplitude to maximum step amplitude measured at the output of the klystrons, will not be less than 0,65. The results obtained from these tests will be in the form of a smooth curve of varying slope and with no inflections greater than 3%. The linearity of the output characteristic, measured as above, shall not vary by more than 1% for any setting of the focus current within ±2% of the recommended current.

Note 13. Minimum efficiency at 12,5kW output under typical conditions.

Note 14. Output shall be level to ±0,5dB for 250kHz either side of the carrier.

Note 15. See Note 6. 50mA applies to a single sound klystron.

Note 16. In order to economically operate vision and sound klystrons from a common h.t. supply, but with sound output at one fifth of the vision output, it is usual to operate the sound klystron with its beam current reduced to approx. one fifth that of the vision klystron. This is accomplished by operating the modulating anode at reduced voltage. Any potential divider network used to supply the modulating anode must allow for a possible variation in modulating anode current between 0 and 1,5mA.

Note 17. The klystron response will be adjusted as in Note 5(a), but additionally the response at f_V+6,0MHz will be within ±0,5dB of the level at f_V. Variation of the response with swept level will be as in Note 5(b), but additionally the response at f_V+6,0MHz will be within ±1,0dB of the level at f_V.

Note 18. Drive power for 2,5kW peak sync. vision signal.

Note 19. The intermodulation products are measured by using a test signal comprising three c.w. tones at the following levels:

Vision frequency f_V	-8,0dB
Sound frequency f_V+6,0MHz	-7,0dB
Colour sub-carrier f_V+4,43MHz	-17dB

The signal is adjusted to give the above levels at the klystron output. The levels are referred to the 2,25kW peak sync. power level.

The maximum level of -50dB applies to all I.P.'s in the frequency range f_V-1,75MHz to f_V+6,0MHz.

Note 20. New tubes should be operated at 5,0V. Heater voltage may require to be increased as life progresses.

Note 21. Cooling air must be filtered to reduce precipitation of dust.

(continued)

Notes – continued

Note 22. The klystron is so tuned that for constant input power the variation in output power is less than 1,0dB over the specified bandwidth at all power levels between -2,0dB and -14dB with respect to the specified output.

Note 23. Input frequency is set to 2,75MHz below the centre of the 8,0MHz channel, and the input and beam powers adjusted to give the specified output.

Note 24. The magnet supply should be current regulated so that as the magnet coils warm up, the magnet current remains constant to within 2% of the value specified for the individual tube on the test data sheet supplied with each tube.

Note 25. Cooling air must be filtered to reduce precipitation of dust.

Note 26. Measured at input to mount assembly.

Retrofit Conversion Kits

When, in existing equipment, it is desired to substitute the Z153/50Z, Z163/50Z or Z173/50Z for ITT types Z151/50Z, Z161/50Z and Z171/50Z respectively, (or tubes of similar type of other manufacturers), the associated mount assemblies can be quickly adapted for the purpose by the use of the following available conversion kits:

Z-CON153 - For substitution of Z151/50Z by Z153/50Z
Z-CON163 - For substitution of Z161/50Z by Z163/50Z
Z-CON173 - For substitution of Z171/50Z by Z173/50Z

Fig. 1 Typical Beam Characteristic

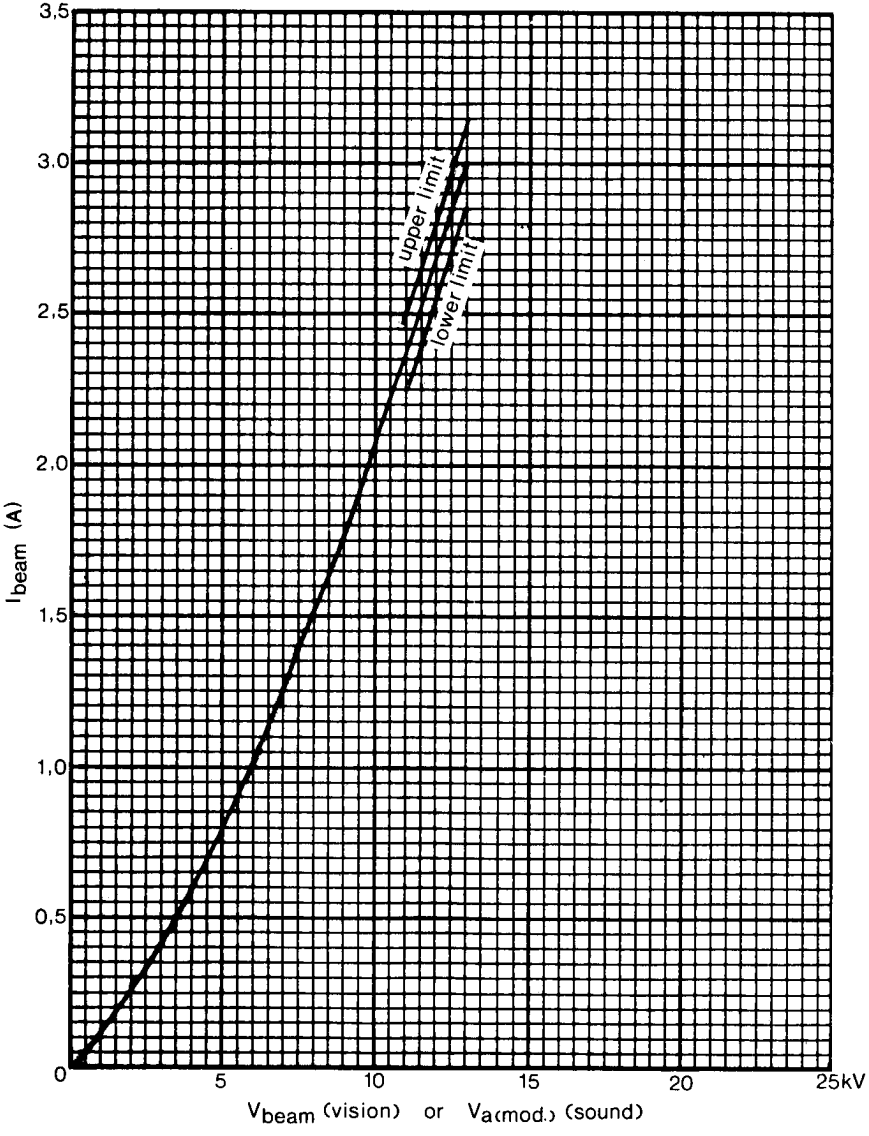

Fig. 2 Z173/50Z Klystron Outline

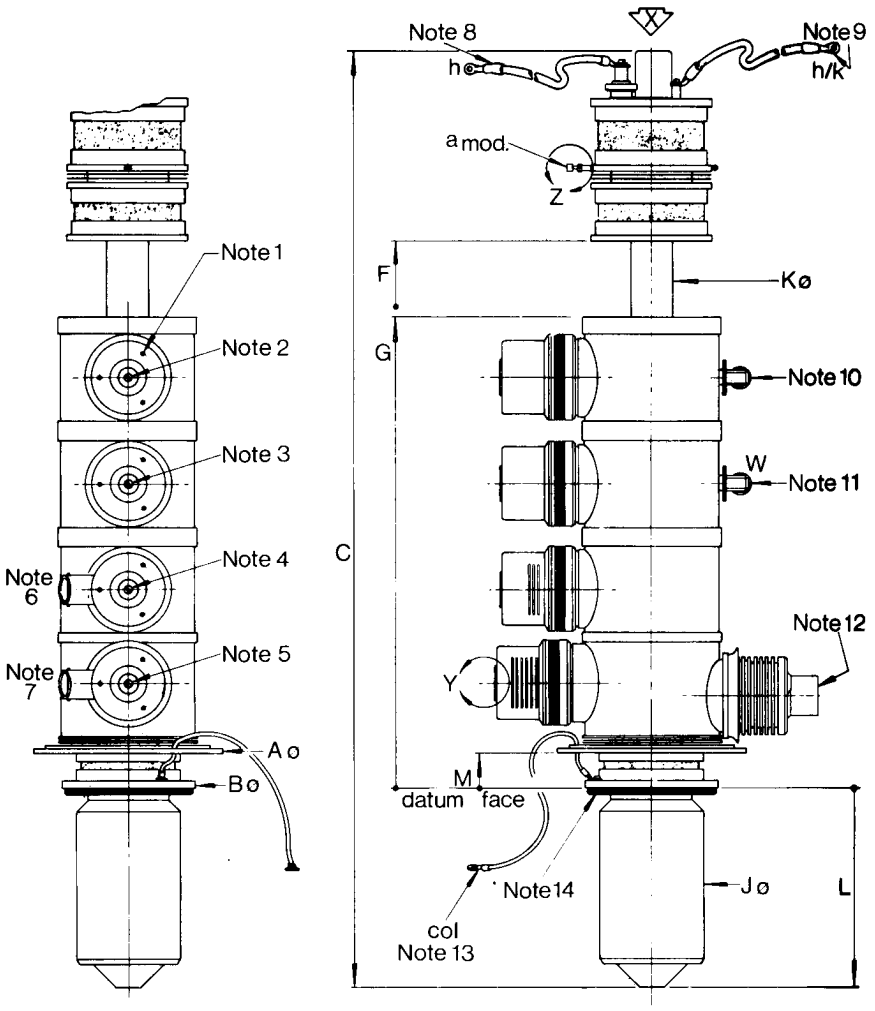

Fig. 2 Z173/50Z Klystron Outline — continued

Plan view at arrow X

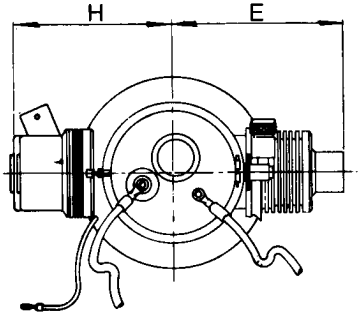

Detail W

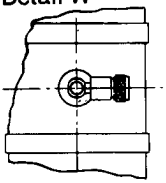

Detail Y

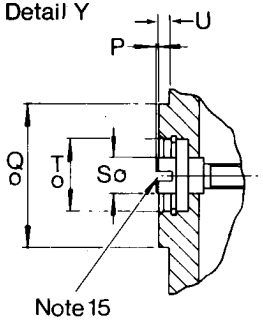

Detail Z

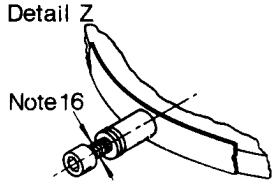

Notes

1. Three holes tapped 6-32 UNC-2B 0,312in. deep equispaced on D p.c.d., typical position tolerance 0,005in. dia.
2. Input cavity tuner adjuster.
3. Second cavity tuner adjuster.
4. Penultimate cavity tuner adjuster.
5. Output cavity tuner adjuster.
6. Air inlet.
7. Air inlet
8. Heater lead (red). Length 15in. min. Lug 0,25in. diameter.
9. Heater/cathode lead (black). Length 15in. min. Lug 0,312in. diameter.
10. R.F. input socket, type N (UG-21D/U).
11. R.F. load socket, type N (UG-21D/U).
12. R.F. output line.
13. Collector lead (green). Length 36in. min. 2BA terminal.
14. 'O' ring, size No. 428 to BS1806.
15. Slot N wide x R deep (cavity tuning screw).
16. Connecting lug, V diameter.

Dimensions

	mm	in.
A	203,2 max.	8,00 max.
B	142,87 ± 0,51	5,625 ± 0,02
C	1018,5 max.	40,10 max.
D	60,33 t.p.	2,375 t.p.
E	179,3	7,05
F	590,8	23,26
G	508,3	20,01
H	165,1	6,50
J	111,13 ± 0,51	4,375 ± 0,02
K	44,45 ± 0,25	1,750 ± 0,01
L	216,0	8,50
M	38,23 ± 0,76	1,505 ± 0,03
N	2,44 + 0,10 − 0,00	0,096 + 0,004 − 0,000
P	0,8 max.	0,03 max.
Q	38,05 + 0,00 − 0,05	1,498 + 0,000 − 0,002
R	3,68 ± 0,25	0,145 ± 0,010
S	9,52 ± 0,40	0,375 ± 0,015
T	19,05 + 0,13 − 0,00	0,750 + 0,005 − 0,000
U	3,18 max.	0,125 max.
V	4,17 max.	0,164 max.

Fig. 3 Z173/50Z Klystron in ZM173 Mount Assembly

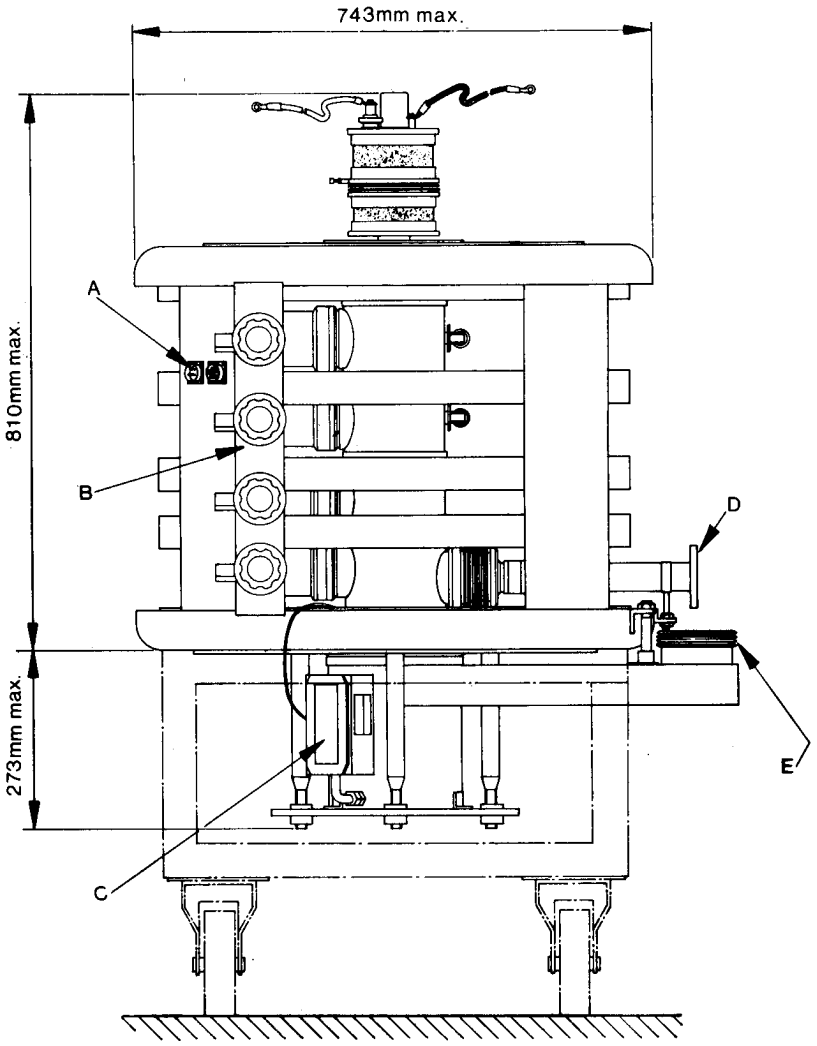

A. Magnet interlock connector.
B. Cavity tuner panel.
C. Level trip.
D. R.F. output.
E. Steam outlet.

ITT Components are available from

or directly from

ITT Components Group Europe
Standard Telephones and Cables Limited,
Valve Product Division,
Brixham Road,
Paignton, Devon. TQ4 7BE
Tel : 0803 - 50762 Telex : 42830

Printed by Lay-Press Ltd, England

ITT

ITT COMPONENTS GROUP EUROPE

Standard Telephones and Cables Limited
Edinburgh Way
HARLOW, Essex
Telephone : 0279-6 26811 (Harlow) Ext. 405 Telex : 81146

NEWS RELEASE

Date: 4 September 1972

No.: 2206E

NEW INTEGRAL CAVITY KLYSTRONS FROM ITT

A new range of u.h.f. television amplifier klystrons of the four integral-cavity type has been developed by ITT Components Group Europe. Coverage of frequency bands IV and V, from 470 MHz to 854 MHz, is provided by the three new models, which can be used for peak synchronous power outputs of up to 12,5kW.

These integral-cavity klystrons (Z153/Z163/Z173) offer considerable advantages over equivalent external-cavity types for which they are direct replacements. All tuning is done within the vacuum envelope thus eliminating periodic maintenance of the cavities, and the replacement of klystrons in their mounts is easier and quicker because of the integral construction.

Little or no adjustment is required prior to operation and if necessary channel changing can be made by cavity tuning only. Also, the input/output coupling and all cavity loadings are fixed, again to minimise tuning.

Levels of radiation from the klystron are significantly reduced with integral-cavity units, thus improving the overall stability of the transmitter in which they are installed. These klystrons have good long-term stability which makes them ideal for unattended, low maintenance operation. Typical turn-on powers of 97% of normal within 2min of h.t. application have been achieved in both vision and sound service.

For further information contact ITT Components Group Europe, Valve Product Division, Brixham Road, Paignton, Devon TQ4 7BE - telephone: Paignton (0803) 50762; telex: 42830.

Press contacts : **Tony Devereux/Roger Dence**

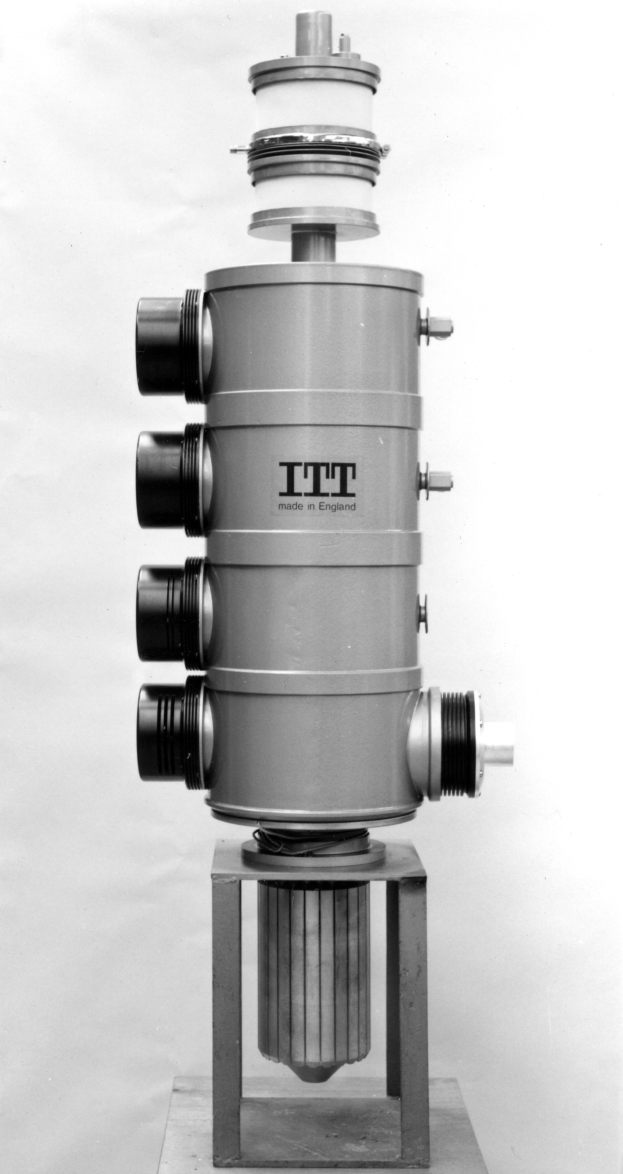
ITT
made in England