SYLVANIA

engineering data service

SYLVANIA

17JP4

CHARACTERISTICS

GENERAL DATA

Focusing Method	Magnetic
Deflecting Method	Magnetic
Deflecting Angle	
Horizontal	66 Degrees
Diagonal	70 Degrees
Phosphor	P4
Fluorescence	White
Persistence	Medium
Faceplate	Gray Filter Glass
Light Transmittance (approx.)	66 Percent

ELECTRICAL DATA

Heater Voltage	6.3 Volts
Heater Current (approx.)	0.6 Ampere
Direct Interelectrode Capacitances (approx.)	
Cathode to All Other Electrodes	5 μμf
Grid No. 1 to All Other Electrodes	6 μμf
External Conductive Coating to Anode[1]	750 μμf Max.
	500 μμf Min.
Ion Trap Magnet	External, Single Field Type

MECHANICAL DATA

Minimum Useful Screen Dimensions	14¼ x 10¾ Inches
Bulb Contact, (Recessed Small Cavity Cap)	J1-21
Base (Small Shell Duodecal 5-Pin)	B5-57
Basing	12N

RATINGS

MAXIMUM RATINGS (Design Center Values)

Anode Voltage	18,000 Volts dc
Grid No. 2 Voltage	410 Volts dc
Grid No. 1 Voltage	
Negative Bias Value	125 Volts dc
Positive Bias Value	0 Volts dc
Positive Peak Value	2 Volts
Peak Heater-Cathode Voltage:	
Heater Negative with Respect to Cathode	
During Warm-up Period not to Exceed 15 Seconds	410 Volts dc
After Equipment Warm-up Period	150 Volts dc
Heater Positive with Respect to Cathode	150 Volts dc

RECOMMENDED OPERATING CONDITIONS

Anode Voltage[2]	16,000 Volts dc
Grid No. 2 Voltage	300 Volts dc
Grid No. 1 Voltage Required for Cutoff[3]	-33 to -77 Volts dc
Focusing Coil Current (approx.)[4]	100 Ma dc
Ion Trap Magnet Field Strength (approx.)	45 Gausses

CIRCUIT VALUES

Grid No. 1 Circuit Resistance	1.5 Megohms Max.

NOTES:

1. *External conductive coating must be grounded.*
2. *Brilliance and definition decrease with decreasing anode voltage. In general, the anode voltage should not be less than this value.*
3. *Visual extinction of undeflected focused spot.*
4. *For JETEC focusing coil 109 or equivalent three inches from reference line, bias adjusted to 20 foot lamberts on a 10¾ x 14¼ inch picture area sharply focused at center of screen.*

QUICK REFERENCE DATA

Television Picture Tube
17" Direct Viewed
Rectangular Glass Type
Gray Filter Glass
Magnetic Deflection
Magnetic Focus
Single Field Ion Trap
External Conductive Coating

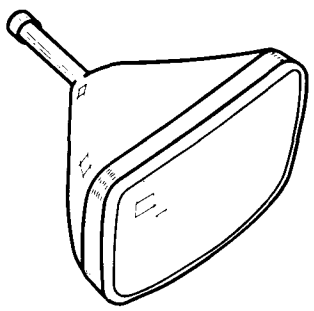

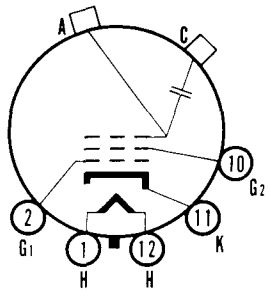

12-N

SYLVANIA ELECTRIC PRODUCTS INC.

Prepared and Released By The
TECHNICAL PUBLICATIONS SECTION
EMPORIUM, PENNSYLVANIA

MAY 1952

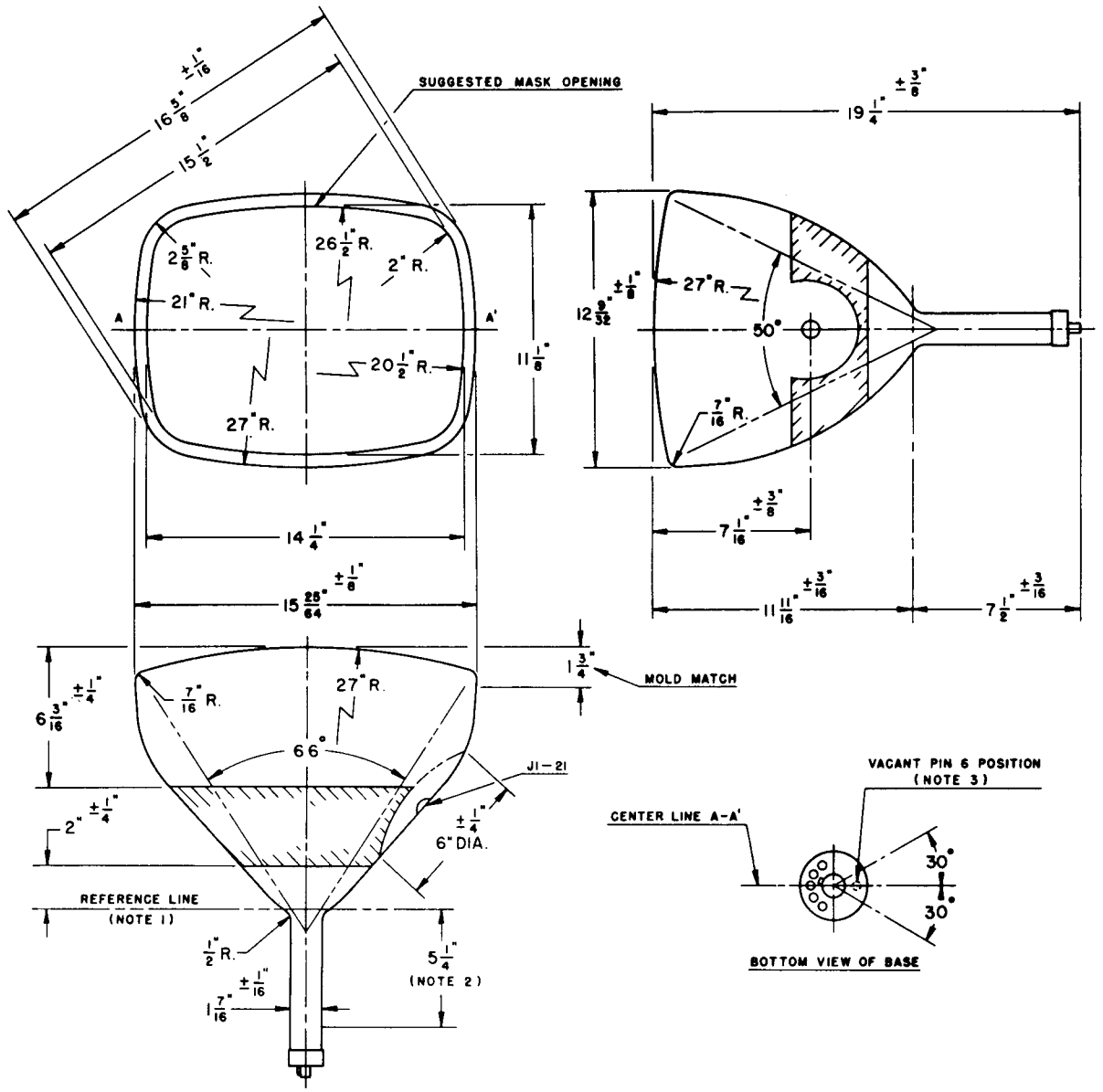

DIAGRAM NOTES:

1. *Reference line is determined by the plane of the upper edge of the reference line gauge (RTMA No. 110) when the gauge is resting on the glass cone.*
2. *Nominal position of ion trap magnet.*
3. *Anode contact aligns with pin position No. 6 ±30 degrees.*

WARNING:

X-ray radiation shielding may be necessary to protect against possible danger of personal injury from prolonged exposure at close range if this tube is operated at higher than the manufacturer's Maximum Rated Anode Voltage or 16,000 volts, whichever is less.