ADVANCE DATA

CHARACTERISTICS

GENERAL DATA

Focusing Method	Electrostatic	
Deflecting Method	Magnetic	
Deflecting Angle (approx.)		
Horizontal	65	Degrees
Diagonal	70	Degrees
Phosphor	Aluminized, P4	
Fluorescence	White	
Persistence	Short to Medium	
Faceplate	Gray Filter Glass	
Light Transmittance (approx.)	74	Percent

ELECTRICAL DATA

Heater Voltage	6.3	Volts
Heater Current	0.3 ± 5%	Ampere
Heater Warm-up Time[1]	11	Seconds
Direct Interelectrode Capacitances (approx.)		
Cathode to All Other Electrodes	5	μμf
Grid No. 1 to All Other Electrodes	6	μμf
External Conductive Coating to Anode[2]	1500	μμf Max.
	750	μμf Min.
Ion Trap Magnet	External, Single Field Type	

MECHANICAL DATA

Minimum Useful Screen Dimensions (Maximum Assured)	14 5/16 x 11 1/8	Inches
Minimum Useful Screen Area	149	Sq. Inches
Bulb	J133B or J133D	
Bulb Contact, (Recessed Small Cavity Cap)	J1-21	
Base (Small Shell Duodecal 6-Pin)	B6-63	
Basing	12L	
Weight (approx.)	18	Pounds

RATINGS

MAXIMUM RATINGS (Absolute Maximum Values)

Anode Voltage	17,600	Volts dc
Grid No. 4 (Focusing Electrode) Voltage	-550 to +1100	Volts dc
Grid No. 2 Voltage	550	Volts dc
Grid No. 1 Voltage		
Negative Bias Value	155	Volts dc
Negative Peak Value	220	Volts
Positive Bias Value	0	Volts dc
Positive Peak Value	2	Volts

from JETEC release #2279, Sept. 22 1958

QUICK REFERENCE DATA

Television Picture Tube
17" Direct Viewed
Rectangular Glass Type
Gray Filter Glass
70° Magnetic Deflection
Low Voltage Electrostatic Focus
Single Field Ion Trap
External Conductive Coating
Spherical Face Plate
Aluminized Screen
6.3 Volt, 300 Ma Heater

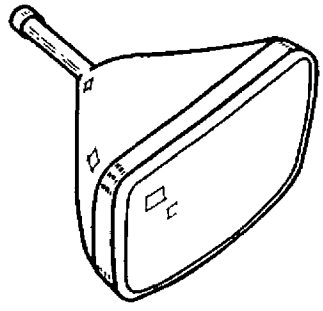

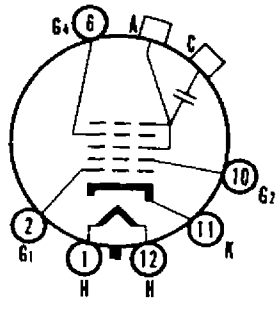

12-L

SYLVANIA ELECTRIC PRODUCTS INC.
TELEVISION PICTURE TUBE DIVISION
SENECA FALLS, NEW YORK

Prepared and Released By The TECHNICAL PUBLICATIONS SECTION EMPORIUM, PENNSYLVANIA

June 23, 1958

MAXIMUM RATINGS (Absolute Maximum Values - Continued)

Peak Heater-Cathode Voltage:		
Heater Negative with Respect to Cathode		
During Warm-up Period not to Exceed 15 seconds	450	Volts
After Equipment Warm-up Period	200	Volts
Heater Positive with Respect to Cathode	200	Volts

TYPICAL OPERATING CONDITIONS

Anode Voltage	14,000	Volts dc
Grid No. 4 Voltage for Focus[3]	-50 to +300	Volts dc
Grid No. 2 Voltage	300	Volts dc
Grid No. 1 Voltage Required for Cutoff[4]	-35 to -72	Volts dc
Ion Trap Magnet Field Strength (approx.)	30	Gausses

CIRCUIT VALUES

Grid No. 1 Circuit Resistance	1.5	Megohms Max.

NOTES:

1. Heater Warm-up Time is defined as the time required for the voltage across the heater to reach 80% of its rated value after applying four (4) times rated heater voltage to a circuit consisting of the tube heater in series with a resistance equal to three (3) times rated heater voltage divided by rated heater current.

2. External conductive coating must be grounded.

3. For best center focus, with grid No. 1 bias voltage and video signal voltage adjusted for 100 μa anode current on a 14 5/16 x 11 1/8" picture area.

4. Visual extinction of focused raster.

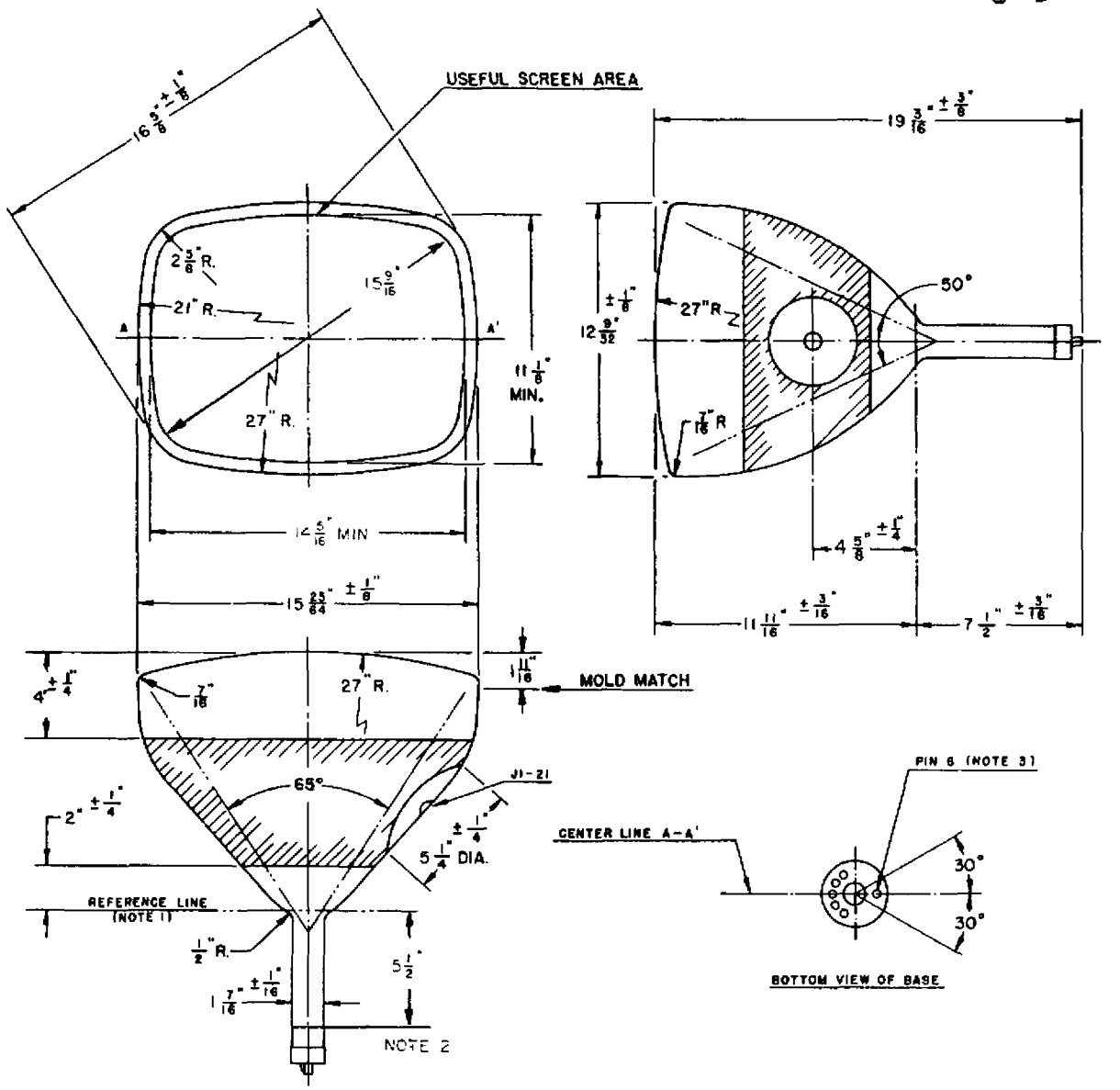

DIAGRAM NOTES:

1. Reference line is determined by the plane of the upper edge of the reference line gauge (JETEC No. 110) when the gauge is seated against the glass cone.

2. Nominal position of ion trap magnet.

3. Base Pin No. 6 aligns with horizontal centerline of tube within 30° and is on same side as anode contact, J1-21.

WARNING:

X-ray radiation shielding may be necessary to protect against possible danger of personal injury from prolonged exposure at close range if this tube is operated at higher than the manufacturer's Maximum Rated Anode Voltage or 16,000 volts, whichever is less.