TELEVISION PICTURE TUBE TYPE 17BZP4/17CAP4/17CKP4

110° Magnetic Deflection
Rectangular Glass Construction
Low-Voltage Electrostatic Focus

Straight Gun, No Ion Trap Required
14-3/4" × 11-11/16" Screen Size
12-13/16" Max. Overall Length

Aluminized Screen
Spherical Faceplate
External Conductive Coating

ELECTRICAL:

Cathode	Coated Unipotential	
Heater:		
Voltage (ac or dc)	6.3	Volts
Current	0.6	Ampere
Warm-up Time⊕	11	Seconds
Direct Interelectrode Capacitances:		
Grid 1 to all other Electrodes	6	μμf
Cathode to all other Electrodes	5	μμf
External Conductive Coating to Anode:		
Maximum	1500	μμf
Minimum	1000	μμf
Screen:		
Phosphor	Aluminized P4	
Fluorescence	White	
Persistance	Short	
Focusing Method	Low-Voltage Electrostatic	
Deflection Method	Magnetic	
Deflection Angle:		
Horizontal	105°	
Vertical	87°	
Diagonal	110°	
No-Ion-Trap Gun	No Magnet Required	

MECHANICAL:

Mounting Position	Any
Screen Dimensions (min. at greatest part):	
Width	14-3/4"
Height	11-11/16"
Diagonal	15-3/4"
Area	155 Sq. Inches
Faceplate	Spherical
Glass	Neutral Gray
Transmission (approx.)	78%
Bulb Dimensions (at greatest part):	
Width	15-5/8" ± 1/8"
Height	12-3/4" ± 1/8"
Diagonal	16-9/16" ± 1/8"
Bulb Number	J132½A1 or equiv.
Overall Length	12-9/16" ± 1/4"
Neck Length	5-7/16" ± 1/8"
Anode Terminal	Recessed Small Cavity Cap (JETEC No. J1-21)
Base	Small Button, 7-Pin Style B (JETEC No. B7-183)
Basing	8HR
Net Weight (approx.)	10 lbs.

MAXIMUM RATINGS

Design Center Values

Anode Voltage†	16000	max.	Volts
Grid 4 Voltage:			
Positive Value	1000	max.	Volts
Negative Value	500	max.	Volts
Grid 2 Voltage	500	max.	Volts
Grid 1 Voltage:			
Negative Bias Value	140	max.	Volts
Negative Peak Value	200	max.	Volts
Positive Bias Value	0	max.	Volts
Positive Peak Value	2	max.	Volts
Peak Heater-Cathode Voltage:			
Heater Negative with Respect to Cathode	180	max.	Volts
Heater Positive with Respect to Cathode	180	max.	Volts

LIMITING CIRCUIT VALUES:

Grid 1 Circuit Resistance	1.5	max.	Megohms
Grid 2 Circuit Resistance■	10000	min.	Ohms
Grid 4 Circuit Resistance■	10000	min.	Ohms

GRID DRIVE OPERATION
(Video Signal Applied to Grid 1)

TYPICAL OPERATING CONDITIONS:

Anode Voltage	14000	16000	Volts
Grid 2 Voltage	300	400	Volts
Grid 4 Voltage for Focus	0 to + 400	0 to + 400	Volts
Grid 1 Raster Cutoff Voltage	-28 to -72	-36 to -94	Volts

CATHODE DRIVE OPERATION
(Video Signal Applied to Cathode)

TYPICAL OPERATING CONDITIONS:

Anode to Grid 1 Voltage	14000	16000	Volts
Grid 2 to Grid 1 Voltage	300	400	Volts
Grid 4 to Grid 1 Voltage for Focus	0 to 400	0 to 400	Volts
Cathode to Grid 1 Raster Cutoff Voltage	28 to 60	36 to 78	Volts

† Brilliance and definition decrease with decreasing anode voltage. Operation with anode voltage less than 12000 volts is not recommended.

■ Protective resistance in the grid 2 and grid 4 (focus electrode) circuit is advisable to prevent damage.

X-RAY WARNING: Inasmuch as the tube rating permits operation at voltages as high as 17.6 kilovolts (absolute value), shielding of the tube for x-ray radiation may be needed whenever the operating conditions involve voltages in excess of 16 kilovolts.

⊕ Heater warm-up time is defined as the time required for the voltage across the heater to reach 80% of its rated value after applying 4 times rated heater voltage to a circuit consisting of the tube heater in series with a resistance equal to 3 times rated heater voltage divided by rated heater current.

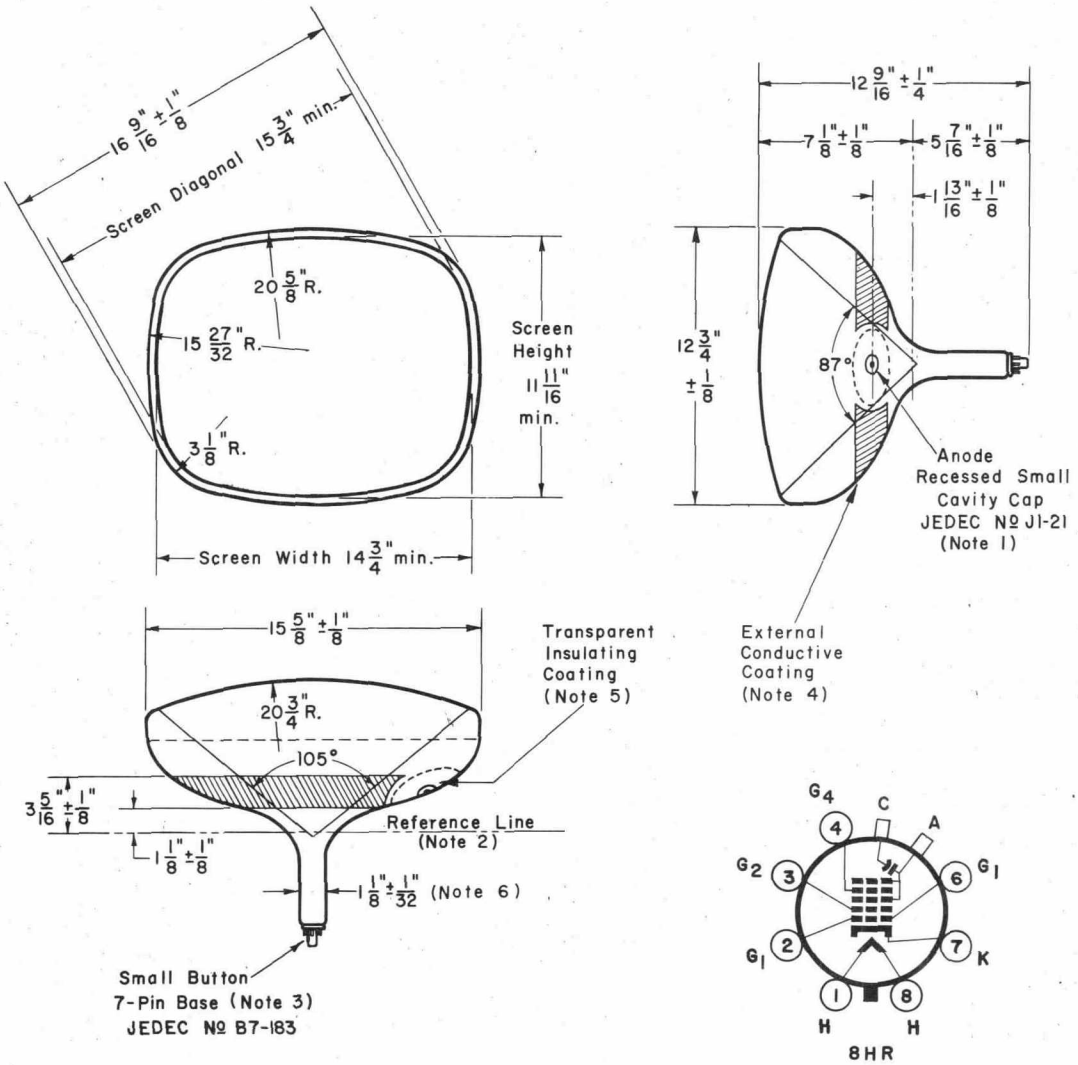

CE-C1369

NOTE 1: The plane through the tube axis and base pin 4 may vary from the plane through the tube axis and the anode terminal by an angular tolerance of ± 30°. The anode terminal is on the same side of the tube as pin 4.

NOTE 2: With the tube neck inserted through the flared end of Reference Line Gauge JETEC No. 126 and with the tube seated in the gauge, the reference line is determined by the intersection of the plane face of the flared end of the gauge with the tube funnel. With a minimum neck length tube, the PM centering magnet (0 to 8 gaus) should extend no more than 2-1/8" from the yoke reference line.

NOTE 3: The socket should not be mounted rigidly, but should be allowed to move freely and have flexible leads. The associated wiring should not impress lateral strains on the base pins. The bottom circumference of the base wafer will lie within a circle concentric with the bulb axis and having a diameter of 1-3/4".

NOTE 4: External conductive coating forms supplementary filter capacitor and must be grounded.

NOTE 5: To clean this area, wipe only with a soft, dry, lintless cloth. The transparent insulating coating is approx. 6" in diameter.

NOTE 6: Neck diameter may be a maximum of 1.168" at the splice.