TUNG-SOL

CATHODE RAY

THE 17CGP4 IS A DIRECT-VIEW PICTURE TUBE DESIGNED FOR TELEVISION APPLICATIONS. ITS FEATURES INCLUDE:

ALUMINIZED SCREEN	**MAGNETIC DEFLECTION**
ELECTROSTATIC FOCUS	**UNIPOTENTIAL CATHODE**
GRAY FILTER FACEPLATE	**EXTERNAL CONDUCTIVE COATING**
RECTANGULAR GLASS CONSTRUCTION	**14 5/16" X 18 1/8" RASTER SIZE**

DOES NOT REQUIRE ION TRAP

ELECTRICAL DATA

FOCUSING METHOD		ELECTROSTATIC
DEFLECTING METHOD		MAGNETIC
DEFLECTION ANGLE (APPROX.):		
HORIZONTAL	65	DEGREES
DIAGONAL	70	DEGREES
DIRECT INTERELECTRODE CAPACITANCES (APPROX.):		
CATHODE TO ALL OTHER ELECTRODES	5	μμf
GRID #1 TO ALL OTHER ELECTRODES	6	μμf
MAXIMUM EXTERNAL CONDUCTIVE COATING TO ANODE	750	μμf
MINIMUM EXTERNAL CONDUCTIVE COATING TO ANODE	500	μμf

OPTICAL DATA

PHOSPHOR NUMBER	SULFIDE TYPE	P-4
FLUORESCENT COLOR		WHITE
PHOSPHORESCENT COLOR		WHITE
PERSISTENCE		MEDIUM
FACEPLATE TRANSMISSION AT CENTER (APPROX.):	74	PERCENT

RATINGS

INTERPRETED ACCORDING TO DESIGN CENTER SYSTEM

HEATER VOLTAGE	6.3	VOLTS
HEATER CURRENT	0.6 ±10%	AMP.
MAXIMUM DC ANODE VOLTAGE	14 000	VOLTS
MAXIMUM DC GRID #4 VOLTAGE	-500 TO +1000	VOLTS
MAXIMUM DC GRID #2 VOLTAGE	500	VOLTS
MAXIMUM GRID #1 VOLTAGE:		
DC NEGATIVE-BIAS VALUE	125	VOLTS
DC POSITIVE-BIAS VALUE	0	VOLTS
POSITIVE-PEAK VALUE	2	VOLTS
MAXIMUM DC PEAK HEATER-CATHODE VOLTAGE:		
HEATER NEGATIVE WITH RESPECT TO CATHODE		
DURING WARM-UP PERIOD NOT TO EXCEED 15 SECONDS	410	VOLTS
AFTER EQUIPMENT WARM-UP PERIOD	180	VOLTS
HEATER POSITIVE WITH RESPECT TO CATHODE	180	VOLTS
MAXIMUM GRID #1 CIRCUIT RESISTANCE	1.5	MEGOHMS

TYPICAL OPERATING CONDITIONS AND CHARACTERISTICS

DC ANODE VOLTAGE	11 000	VOLTS
DC GRID #4 VOLTAGE	-56 TO +310	VOLTS
DC GRID #2 VOLTAGE	300	VOLTS
DC GRID #1 VOLTAGE[A]	-28 TO -72	VOLTS

[A] VISUAL EXTINCTION OF FOCUSED RASTER.

CONTINUED ON FOLLOWING PAGE

TUNG-SOL

CONTINUED FROM PRECEDING PAGE

MECHANICAL DATA

OVERALL LENGTH	17 3/16 ± 3/8	INCHES
GREATEST DIMENSIONS OF BULB:		
DIAGONAL	16 5/8 ± 1/8	INCHES
WIDTH	15 3/8 ± 1/8	INCHES
HEIGHT	12 1/4 ± 1/8	INCHES
MIN. USEFUL SCREEN DIMENSIONS:		
DIAGONAL	15 9/16	INCHES
WIDTH	14 5/16	INCHES
HEIGHT	11 1/8	INCHES
BULB CONTACT	RECESSED SMALL CAVITY CAP	J1-21
BASE	SMALL SHELL DUODECAL 6 PIN	B6-63
BASING		12L

BULB CONTACT ALIGNMENT

J1-21 CONTACT ALIGNS WITH PIN POSITION #6 ± 30 DEGREES

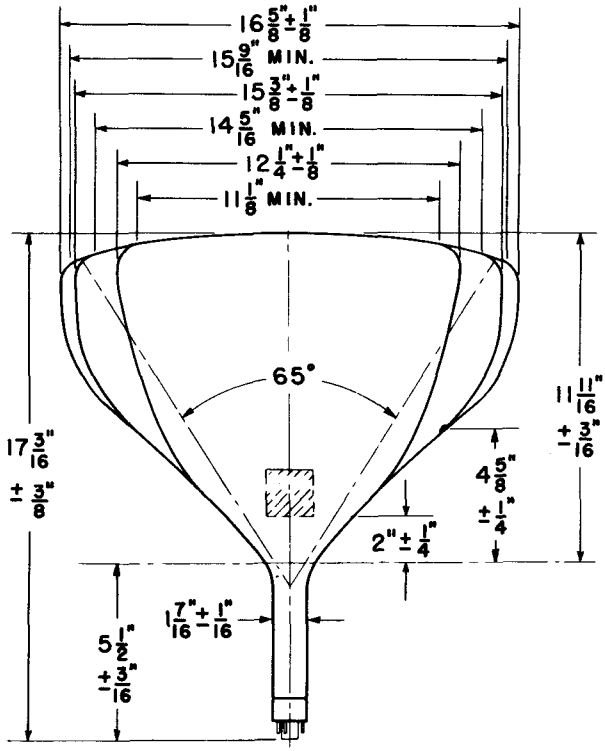

PIN CONNECTIONS

PIN 1 — HEATER
PIN 2 — GRID #1
PIN 6 — GRID #4
PIN 10 — GRID #2
PIN 11 — CATHODE

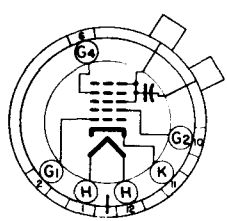

BOTTOM VIEW

PIN 12 — HEATER
ANODE CAP:
GRID NO.3
GRID NO.5