SYLVANIA

engineering data service 17CFP4

CHARACTERISTICS

GENERAL DATA

Focusing Method	Electrostatic
Deflection Method	Magnetic
Deflection Angles (approx.)	
Horizontal	85 Degrees
Diagonal	90 Degrees
Phosphor	Aluminized P4
Fluorescence	White
Persistence	Short to Medium
Faceplate	Gray Filter Glass
Light Transmittance (approx.)	77 ±3 Percent

ELECTRICAL DATA

Heater Voltage	6.3 Volts	
Heater Current	0.6 ±5% Ampere	
Heater Warm-up Time[1]	11 Seconds	
Direct Interelectrode Capacitances (approx.)		
Cathode to All Other Electrodes	5 μμf	
Grid No. 1 to All Other Electrodes	6 μμf	
External Conductive Coating to Anode[2]	1500 μμf	Max.
	1200 μμf	Min.

MECHANICAL DATA

Minimum Useful Screen Dimensions (Maximum Assured)	14¾ x 11 11/16 Inches
Minimum Useful Screen Area	155 Sq. Inches
Bulb Contact (Recessed Small Cavity Cap)	J1-21
Base	B6-63
Basing	12L
Weight (approx.)	10½ Pounds

RATINGS

MAXIMUM RATINGS (Absolute Maximum Values)

Anode Voltage	17,600 Volts	dc
Grid No. 4 Voltage (Focusing Electrode)	−550 to +1100 Volts	dc
Grid No. 2 Voltage	550 Volts	dc
Grid No. 1 Voltage		
Negative Bias Value	155 Volts	dc
Negative Peak Value	220 Volts	
Positive Bias Value	0 Volts	dc
Positive Peak Value	2 Volts	
Peak Heater-Cathode Voltage		
Heater Negative with Respect to Cathode During Warm-up Period Not to Exceed 15 Seconds	450 Volts	
After Equipment Warm-up Period	200 Volts	
Heater Positive with Respect to Cathode	200 Volts	

TYPICAL OPERATING CONDITIONS

Anode Voltage	14,000 Volts	dc
Grid No. 4 Voltage for Focus	−50 to +350 Volts	dc
Grid No. 2 Voltage	300 Volts	dc
Grid No. 1 Voltage Required for Cutoff[3]	−35 to −72 Volts	dc

CIRCUIT VALUES

Grid No. 1 Circuit Resistance	1.5 Megohms Max.

QUICK REFERENCE DATA

Television Picture Tube
17" Direct Viewed
Rectangular Glass Type
Lightweight Tube
Spherical Faceplate
Gray Filter Glass
Aluminized Screen
Electrostatic Focus
90° Magnetic Deflection
Short Neck Tube
No Ion Trap
External Conductive Coating

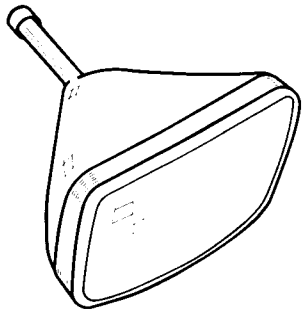

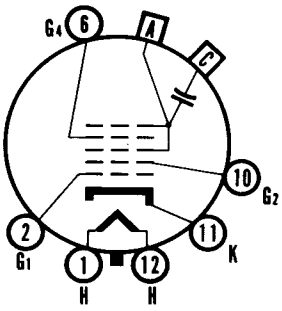

12-L

SYLVANIA ELECTRIC PRODUCTS INC.
TELEVISION PICTURE TUBE DIVISION
SENECA FALLS, NEW YORK

Prepared and Released By The TECHNICAL PUBLICATIONS SECTION EMPORIUM, PENNSYLVANIA
JULY, 1957

NOTES:

1. *Heater warm-up time is the time required for the voltage across the heater terminals to increase to 5.0 volts in the JETEC test circuit, with E = 25 volts and series R = 31.5 ohms.*
2. *External conductive coating must be grounded.*
3. *Visual extinction of focused raster. Extinction of stationary focused spot will require that these values be about 5 volts more negative.*

WARNING:

X-ray radiation shielding may be necessary to protect against possible danger of personal injury from prolonged exposure at close range if this tube is operated at higher than the manufacturer's Maximum Rated Anode Voltage or 16,000 volts, whichever is less.

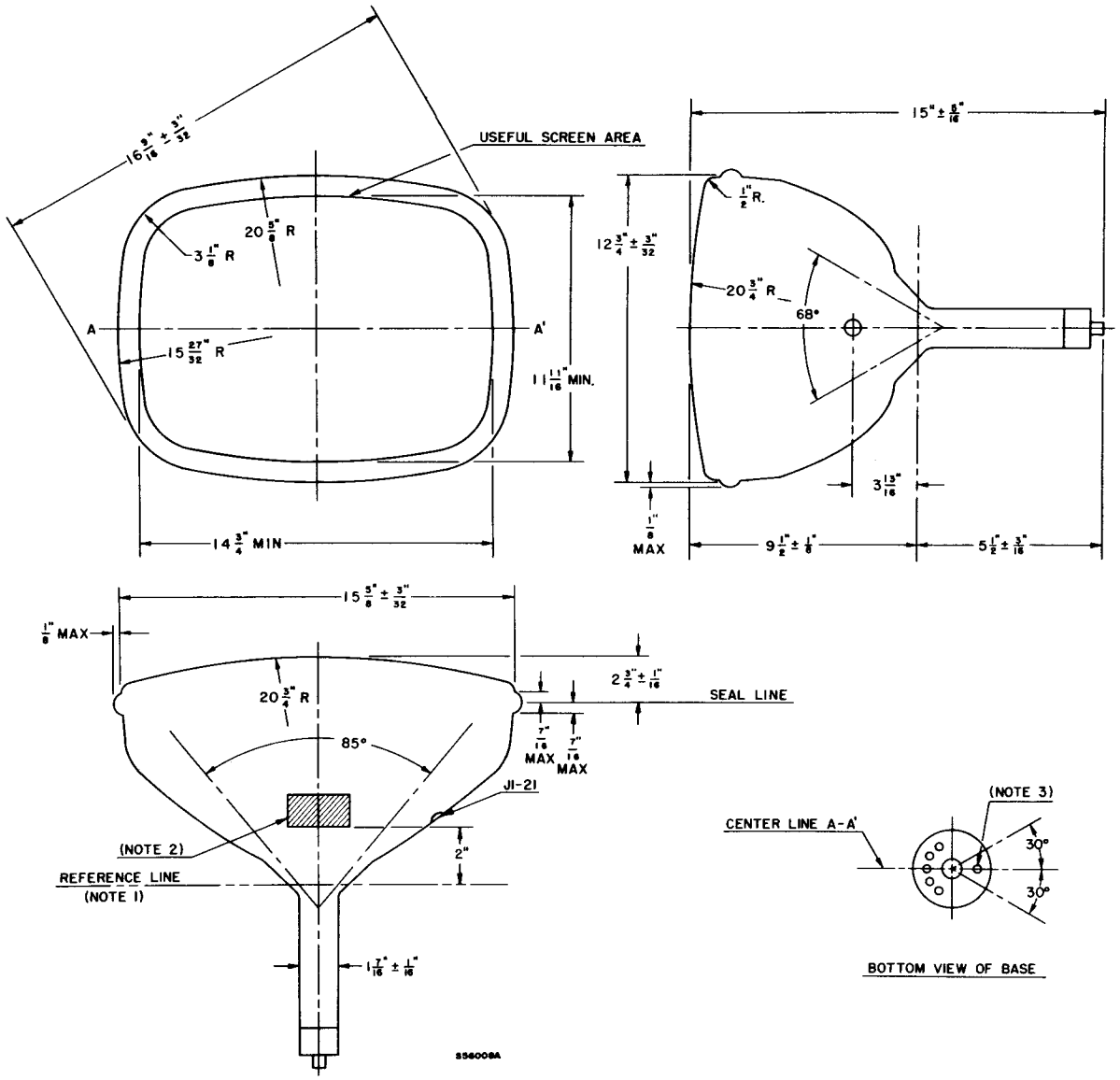

DIAGRAM NOTES:

1. *Reference line is determined by the plane C-C' of the reference line gauge (JETEC No. 116) when the gauge is resting on the glass cone.*
2. *Contact area for external conductive coating, 2'' x 2'', located 90° counter-clockwise from anode contact as viewed from base end of tube.*
3. *Anode contact aligns with pin position No. 6 ±30 degrees.*