TUNG-SOL

CATHODE RAY

THE 17AP4 IS A DIRECT VIEW PICTURE TUBE DESIGNED FOR USE IN TELEVISION APPLICATIONS. ITS FEATURES INCLUDE:

GREY FILTER FACEPLATE
EXTERNAL CONDUCTIVE COATING
RECTANGULAR GLASS CONSTRUCTION
UNIPOTENTIAL CATHODE
MAGNETIC FOCUS & DEFLECTION
EXTERNAL SINGLE FIELD ION TRAP
10 3/4" X 14 1/4" RASTER SIZE

ELECTRICAL DATA

FOCUSING METHOD		MAGNETIC
DEFLECTING METHOD		MAGNETIC
DEFLECTION ANGLE (APPROX.)		
HORIZONTAL	65	DEGREES
DIAGONAL	70	DEGREES
DIRECT INTERELECTRODE CAPACITANCES (APPROX.)		
CATHODE TO ALL OTHER ELECTRODES	5	μμf
GRID #1 TO ALL OTHER ELECTRODES	7	μμf
MAXIMUM EXTERNAL CONDUCTIVE COATING TO ANODE	2 000	μμf
MINIMUM EXTERNAL CONDUCTIVE COATING TO ANODE	750	μμf

OPTICAL DATA

PHOSPHOR NUMBER		NO. 4
FLUORESCENT COLOR		WHITE
PHOSPHORESCENT COLOR		WHITE
PERSISTENCE		MEDIUM
FACEPLATE LIGHT TRANSMISSION AT CENTER (APPROX.)	66	PERCENT

MECHANICAL DATA

OVERALL LENGTH	18 5/8 ± 3/8	INCHES
GREATEST DIMENSIONS OF BULB		
DIAGONAL	16 5/8 ± 1/8	INCHES
WIDTH	15 3/8 ± 1/8	INCHES
HEIGHT	12 1/4 ± 1/8	INCHES
MINIMUM USEFUL SCREEN DIMENSIONS		
WIDTH	14 1/4	INCHES
HEIGHT	10 3/4	INCHES
BULB CONTACT	RECESSED SMALL CAVITY CAP	J1-21
BASE	SMALL SHELL DUODECAL 5 PIN	B5-57
BASING		12N

BULB CONTACT ALIGNMENT
J1-21 CONTACT ALIGNS WITH VACANT PIN POSITION #6 ± 30 DEGREES

PIN CONNECTIONS

PIN 1 – HEATER
PIN 2 – GRID NO. 1
PIN 10 – GRID NO. 2
PIN 11 – CATHODE

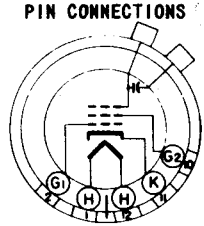

BOTTOM VIEW

PIN 12 – HEATER
ANODE CAP:
GRID NO. 3

CONTINUED ON FOLLOWING PAGE

PRINTED IN U.S.A.

CONTINUED FROM PRECEDING PAGE

RATINGS

DESIGN CENTER VALUES

HEATER VOLTAGE	6.3	VOLTS
HEATER CURRENT	0.6	AMP.
MAXIMUM DC ANODE VOLTAGE	16 000	VOLTS
MAXIMUM DC GRID #2 VOLTAGE	410	VOLTS
MAXIMUM GRID #1 VOLTAGE		
DC NEGATIVE-BIAS VALUE	125	VOLTS
DC POSITIVE-BIAS VALUE	0	VOLTS
POSITIVE-PEAK VALUE	2	VOLTS
MAXIMUM DC PEAK HEATER-CATHODE VOLTAGE		
HEATER NEGATIVE WITH RESPECT TO CATHODE		
DURING WARM-UP PERIOD NOT TO EXCEED 15 SECONDS	410	VOLTS
AFTER EQUIPMENT WARM-UP PERIOD	150	VOLTS
HEATER POSITIVE WITH RESPECT TO CATHODE	150	VOLTS

TYPICAL OPERATING CONDITIONS AND CHARACTERISTICS

DC ANODE VOLTAGE	12 000	VOLTS
DC GRID #2 VOLTAGE	300	VOLTS
DC GRID #1 VOLTAGE[A]	-33 TO -77	VOLTS
DC FOCUSING COIL CURRENT (APPROX.)[B]	100 ± 20%	MA.
DC ION TRAP CURRENT STANDARD COIL #111	75 ± 50%	MA.

[A] VISUAL EXTINCTION OF UNDEFLECTED FOCUSED SPOT.

[B] FOR STANDARD FOCUS COIL #109, OR EQUIVALENT, WITH THE COMBINED GRID #1 BIAS VOLTAGE AND VIDEO SIGNAL VOLTAGE ADJUSTED TO PRODUCE A HIGHLIGHT BRIGHTNESS OF 25 FOOT LAMBERTS ON A 14 1/4" BY 10 3/4" PICTURE SIZE. DISTANCE FROM REFERENCE LINE TO CENTER OF AIR GAP ON FOCUS COIL SHALL BE 3.0 INCHES.

CIRCUIT VALUES

MAXIMUM GRID #1 CIRCUIT RESISTANCE	1.5	MEGOHMS

TUNG-SOL

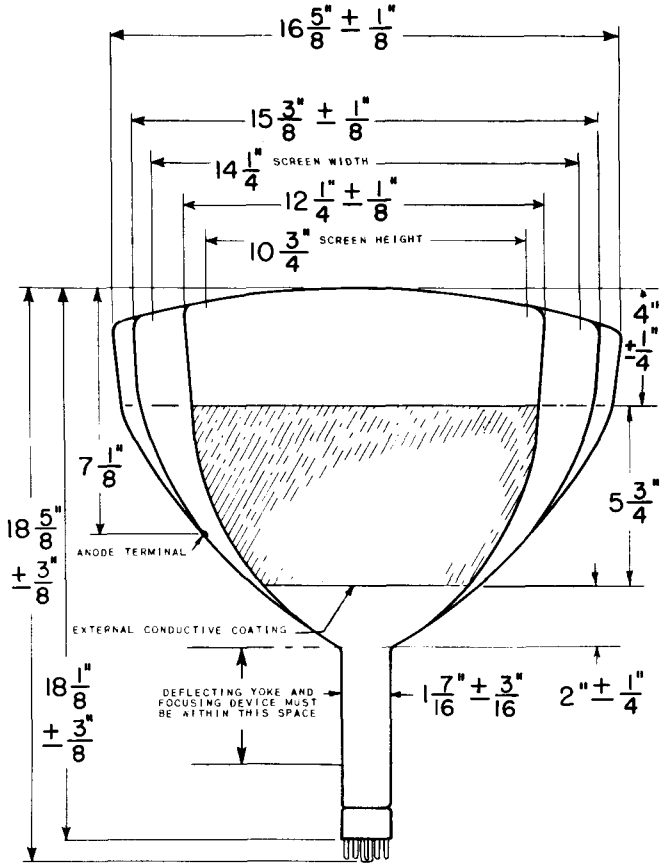

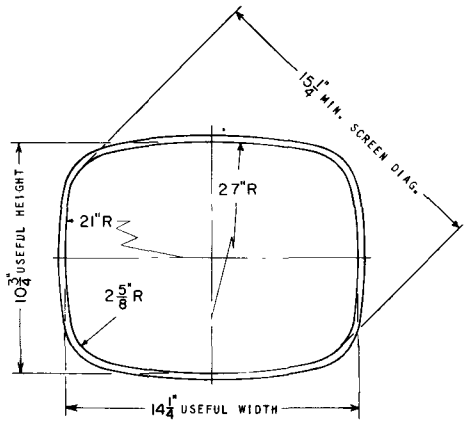

PRINTED IN U. S. A.