MECHANICAL DATA

Bulb[1]	T-40
Top Cap	See Outline
Mounting Position[2]	Vertical
Ambient Temperature Range	-55 to 75°C

ELECTRICAL DATA

HEATER CHARACTERISTICS

Heater Voltage (±7.5%)	6.3 Volts
Heater Current	25-33 Amperes

RATINGS (Absolute Values)

Peak Anode Voltage[3], epy	25.0 Kv	Max.
Peak Inverse Anode Voltage[4], epx	25.0 Kv	Max.
	5% epy	Min.
Cathode Current Rate of Rise	5000 A/μsec.	Max.
Peak Anode Current, I_b	1000 A	Max.
Peak Inverse Grid Voltage, egx	450 Volts	Max.

CHARACTERISTICS AND TYPICAL OPERATION

Reservoir Voltage[5]	2.5-5.5 Volts
Reservoir Current at 4.5 Volts	3-6 Amperes
Cathode Heating Time	15 Minutes
Starting Anode Voltage	4 Kv dc Max.
Average Anode Current	1.0 Amperes dc
Dissipation Factor[6]	9.0×10^9 Max.
Duty Cycle[6]	.001
Grid Drive[7]	
A. Peak Grid Voltage, egy	
Minimum	700 Volts
Maximum	1000 Volts
B. Rate of Rise	.35 μsec. Max.
C. Grid Pulse Duration	2.0 μsec. Min.
D. Drive Impedance	50-200 Ohms
Peak Inverse Grid Voltage, egx	450 Volts
Operation (1)	(Note 8)

NOTES:

1. *No cooling stream of air should be directly applied to the tube envelope.*
2. *Tube should be kept away from strong fields which could ionize the gas in the tube. Clamping is permissible by the base only.*
3. *Instantaneous starting is not recommended. However, when it is absolutely necessary, the maximum permissible epy is 18.0 Kv and should be attained in no less than .04 μsec.*
4. *The peak inverse voltage should not exceed 5 Kv during the first 25 μsec. following the anode pulse.*
5. *The optimum reservoir voltage for operation (1) conditions is printed on the base of the tube and must be held to within ±5%. Applications involving other operating conditions will necessitate redetermination of the optimum reservoir setting.*
6. *The maximum dissipation factor will depend upon the peak forward anode voltage, peak anode current, and pulse repetition according to the formula — epy x I_b x prr = 9. x 10^9 max. This formula is applicable for pulse repetition rates up to 1500 pps. Special caution should be exercised in applying rates in excess of this value. The duty cycle will depend upon the pulse repetition rate and anode pulse width (tp in μsec.) according to formula prr x tp = .001.*

QUICK REFERENCE DATA

The Sylvania Type 1754 is a heavy duty hot cathode, grid controlled, gas rectifier featuring a hydrogen reservoir. The 1754 is designed for pulsing service at high repetition rates, high current and high voltages.

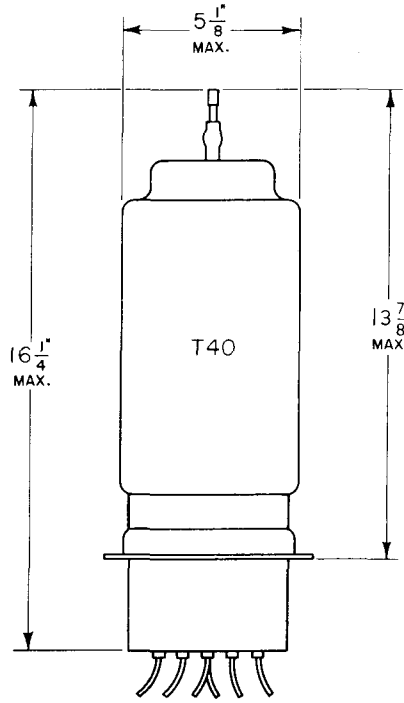

SYLVANIA ELECTRIC PRODUCTS INC.

ELECTRONICS DIVISION
WOBURN, MASS.

Prepared and Released By The TECHNICAL PUBLICATIONS SECTION EMPORIUM, PENNSYLVANIA

4-54-68

NOTES (Continued)

7. *Measurements are made at the tube socket with the thyratron grid disconnected.*
8. *Circuit constants for operation (1) should be so chosen that the peak anode voltage (epy) is 25 Kv under resonant charging conditions; rate of rise of cathode current is 5000 A/μsec.; peak anode current is 1000 A; anode pulse duration is 2.5 μsec.; and pulse repetition rate is 360.*

APPLICATION DATA

The outstanding feature of the Type 1754 is the built-in hydrogen reservoir. A change in the low voltage impressed across this reservoir will change the gas pressure in the tube; an increase will cause the capsule to emit hydrogen, a decrease will cause hydrogen to be absorbed from the tube. By adjusting this reservoir voltage, the equipment designer can effectively use the 1754 over a wider range of parameters than would otherwise be possible. For each specific application, optimum pressure settings provide minimum deionization time, minimum arc-back, and minimum anode heating, with consequent improvement in life potential. The high repetition rates permitted with the 1754 are due to the short deionization time — the time required to convert gaseous ions to neutral molecules when the anode voltage is removed.

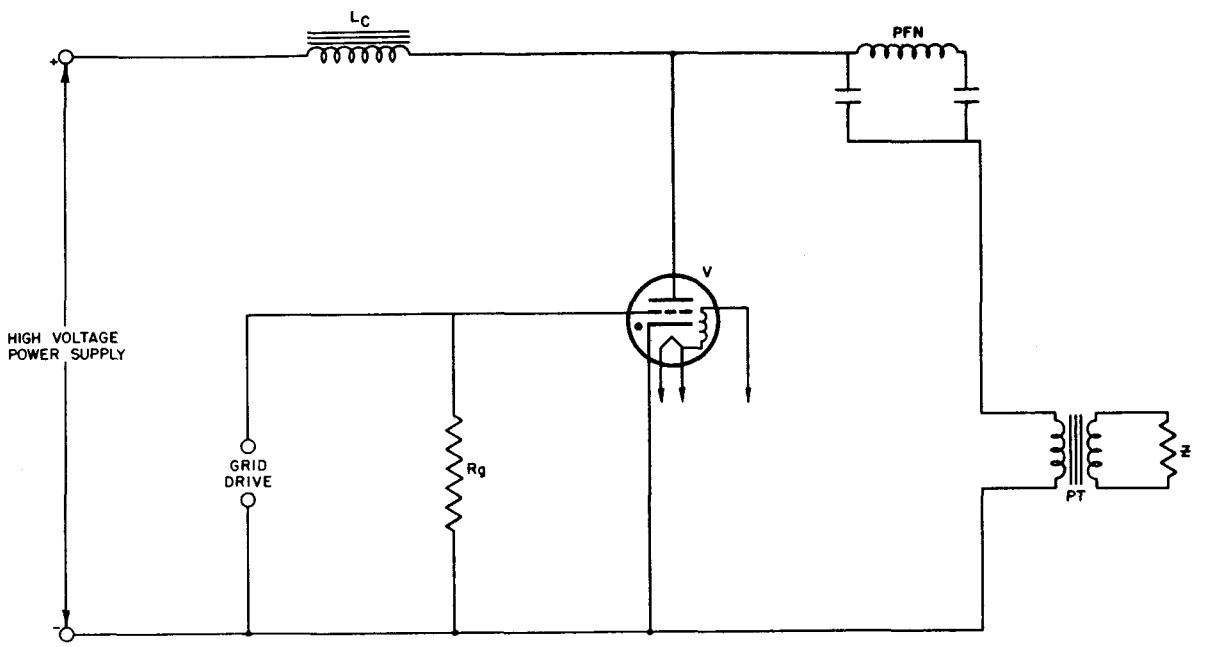

L_c: Charging Choke
PFN: Pulse Forming Network
PT: Pulse Transformer
Z: Load
V: Thyratron

FIG. 1 — CIRCUIT EMPLOYING THE TYPE 1754 THYRATRON

APPLICATION DATA (Continued)

The circuit for which this tube was especially developed is shown in Figure 1. The output, in this case, consists of periodic rectangular pulses developed when the thyratron fires and releases electrical charges stored in the capacitance of the pulse forming network (PFN). This network determines the duration and shape of the pulses. Between pulses, when the thyratron is not conducting, the PFN capacitance charges up through the charging choke L. in a transient which swings the instantaneous plate voltage of the 1754 above the power supply voltage. The value reached is about double the power supply voltage and must be taken into consideration when applying the peak anode voltage rating of the tube. The peak voltage of the pulse supplied to the pulse transformer is about equal to that of the power supply. By means of the pulse transformer, the output to the load may be stepped up to a higher level. This results in a saving in the size and cost of the supply by permitting the use of components with lower voltage ratings. The Sylvania 1754 is well adapted to such voltage step-up by virtue of the very high peak currents it can furnish. Many varieties of short duration pulses may be produced by different PFN designs.

The Type 1754 thyratron may be used in a wide variety of applications which take advantage of such features as:

1. Low deionization time, hence, rapid switching rates
2. High peak currents
3. High plate voltages (but may be used at lower voltages)
4. Moderate trigger requirements
5. Ability to operate at zero bias
6. Operation over a wide ambient temperature range without appreciable effect on the electrical characteristics
7. High efficiency because of low tube voltage drop
8. Reliability and general flexibility of operation

Several specific applications are listed below:

1. Switching in radar modulators
2. As a clipper in radar modulators
3. Switching in welding circuits
4. High power pulse generators
5. Magnetron aging
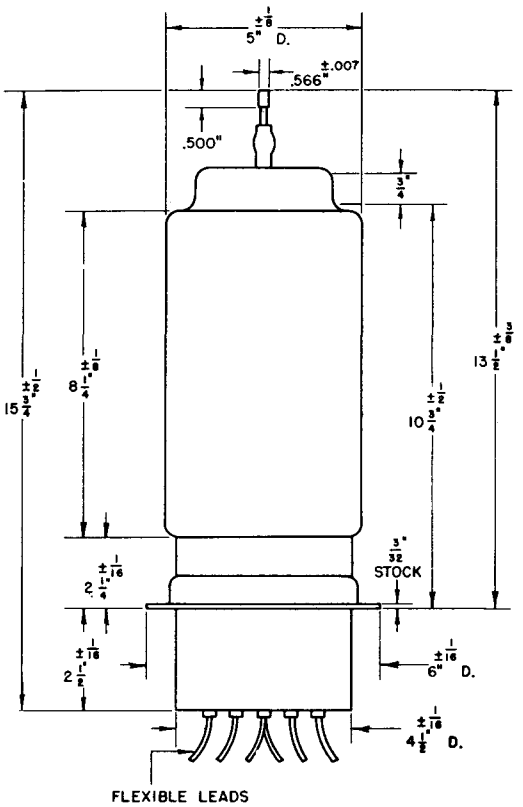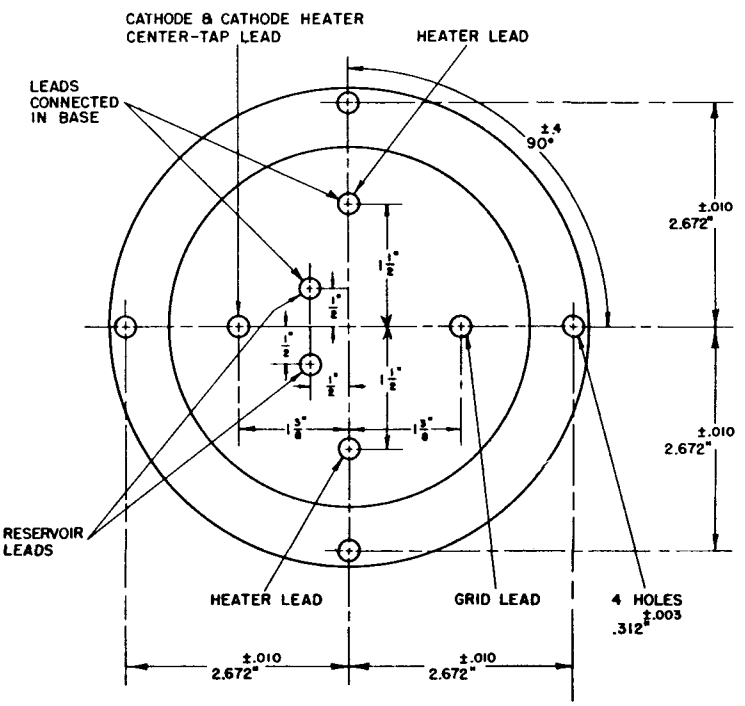
OUTLINE DRAWING