TUNG-SOL

CATHODE RAY

THE 16XP4 IS A DIRECT-VIEW PICTURE TUBE DESIGNED FOR USE IN TELEVISION APPLICATIONS. ITS FEATURES INCLUDE:

UNIPOTENTIAL CATHODE	**GREY FILTER FACEPLATE**
MAGNETIC FOCUS & DEFLECTION	**10 1/8" X 13 1/2" RASTER SIZE**
EXTERNAL DOUBLE FIELD ION TRAP	**RECTANGULAR GLASS CONSTRUCTION**

ELECTRICAL DATA

FOCUSING METHOD		MAGNETIC
DEFLECTING METHOD		MAGNETIC
DEFLECTION ANGLE (APPROX.):		
HORIZONTAL	65	DEGREES
VERTICAL	50	DEGREES
DIAGONAL	70	DEGREES

OPTICAL DATA

PHOSPHOR NUMBER		NO. 4
FLUORESCENT COLOR		WHITE
PHOSPHORESCENT COLOR		WHITE
PERSISTENCE		MEDIUM
FACEPLATE LIGHT TRANSMISSION AT CENTER (APPROX.)	70	PERCENT

MECHANICAL DATA

OVERALL LENGTH	18 3/4 ± 3/8	INCHES
GREATEST DIMENSIONS OF BULB:		
DIAGONAL	16 1/8	INCHES
WIDTH	14 3/4	INCHES
HEIGHT	11 1/2	INCHES
MINIMUM USEFUL SCREEN DIMENSIONS:		
DIAGONAL	15	INCHES
WIDTH	13 19/32	INCHES
HEIGHT	10 3/16	INCHES
BULB CONTACT	RECESSED SMALL CAVITY CAP	J1-21
BASE	SMALL SHELL DUODECAL 5 PIN	B5-57
BASING		12D

BULB CONTACT ALIGNMENT

J1-21 CONTACT ALIGNS BETWEEN PIN POSITIONS #6 & 7 ± 10 DEGREES

PIN CONNECTIONS

PIN 1 – HEATER
PIN 2 – GRID NO. 1
PIN 10 – GRID NO. 2

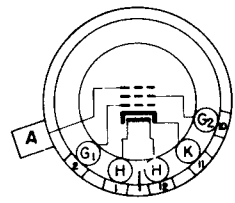

BOTTOM VIEW

PIN 11 – CATHODE
PIN 12 – HEATER
ANODE CAP

CONTINUED ON FOLLOWING PAGE

PRINTED IN U. S. A.

CONTINUED FROM PRECEDING PAGE

RATINGS

DESIGN CENTER VALUES

HEATER VOLTAGE	6.3	VOLTS
HEATER CURRENT	0.6	AMP.
MAXIMUM DC ANODE VOLTAGE	15 000	VOLTS
MAXIMUM DC GRID #2 VOLTAGE	410	VOLTS
MAXIMUM GRID #1 VOLTAGE:		
DC NEGATIVE-BIAS VALUE	125	VOLTS
DC POSITIVE-BIAS VALUE	0	VOLTS
POSITIVE-PEAK VALUE	2	VOLTS
MAXIMUM DC PEAK HEATER-CATHODE VOLTAGE:		
HEATER NEGATIVE WITH RESPECT TO CATHODE		
DURING WARM-UP PERIOD NOT TO EXCEED 15 SECONDS	410	VOLTS
AFTER EQUIPMENT WARM-UP PERIOD	125	VOLTS
HEATER POSITIVE WITH RESPECT TO CATHODE	125	VOLTS

TYPICAL OPERATING CONDITIONS AND CHARACTERISTICS

DC ANODE VOLTAGE	12 000	VOLTS
DC GRID #2 VOLTAGE	250	VOLTS
DC GRID #1 VOLTAGE[A]	-27 TO -63	VOLTS
DC FOCUSING COIL CURRENT (APPROX.)[B]	100	MA.
DC ION TRAP CURRENT STANDARD COIL #108 (APPROX.)	120	MA.

[A] VISUAL EXTINCTION OF UNDEFLECTED FOCUSED SPOT.

[B] FOR STANDARD FOCUS COIL #109, OR EQUIVALENT, WITH THE COMBINED GRID #1 BIAS VOLTAGE AND VIDEO SIGNAL VOLTAGE ADJUSTED TO PRODUCE A HIGHLIGHT BRIGHTNESS OF 20 FOOT LAMBERTS ON A 10 1/8" BY 13 1/2" PICTURE SIZE. DISTANCE FROM REFERENCE LINE TO CENTER OF AIR GAP ON FOCUS COIL SHALL BE 3 INCHES.

CIRCUIT VALUES

MAXIMUM GRID #1 CIRCUIT RESISTANCE	1.5	MEGOHMS

TUNG-SOL

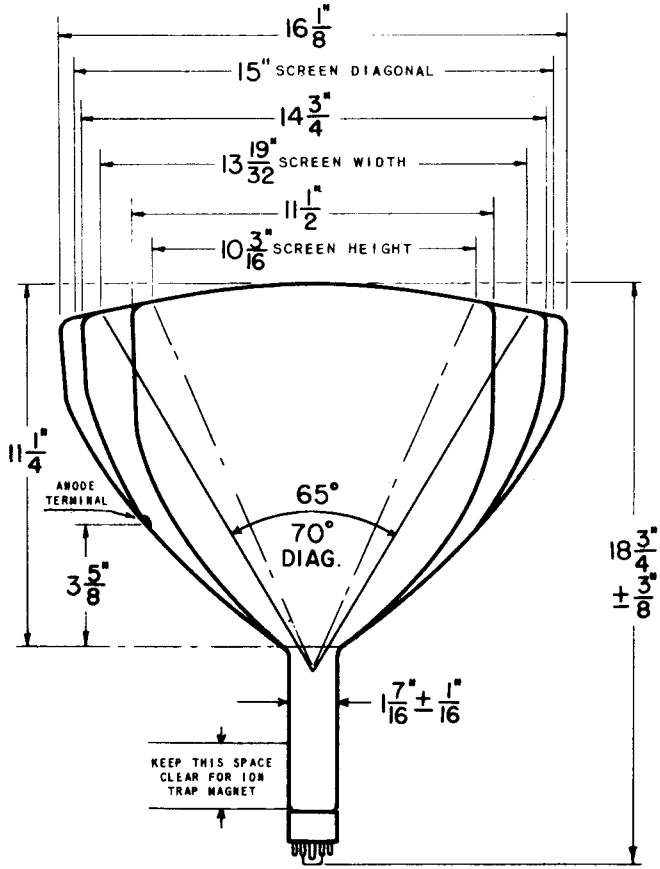

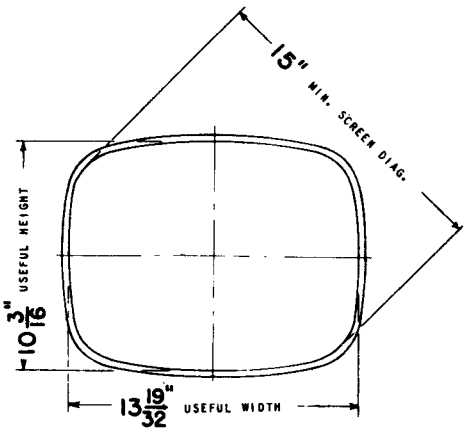

PRINTED IN U.S.A.