TUNG-SOL

CATHODE RAY

THE 16GP4, 16GP4A, 16GP4B, AND 16GP4C ARE DIRECT-VIEW PICTURE TUBES DESIGNED FOR USE IN TELEVISION APPLICATIONS. THEY ARE IDENTICAL *EXCEPT* FOR THEIR FACEPLATES WHICH ARE AS FOLLOWS:

16GP4 - GREY FILTER FACEPLATE — *16GP4B - GREY FILTER - FROSTED*
16GP4A - CLEAR GLASS FACEPLATE — *16GP4C - CLEAR GLASS - FROSTED*

THEIR COMMON FEATURES INCLUDE:

UNIPOTENTIAL CATHODE — **ROUND METAL CONSTRUCTION**
MAGNETIC FOCUS & DEFLECTION — **EXTERNAL SINGLE FIELD ION TRAP**
10" X 13 1/4" RASTER SIZE

ELECTRICAL DATA

FOCUSING METHOD		MAGNETIC
DEFLECTING METHODE		MAGNETIC
DEFLECTION ANGLE (APPROX.)	70	DEGREES
DIRECT INTERELECTRODE CAPACITANCES (APPROX.):		
CATHODE TO ALL OTHER ELECTRODES	5	μμf
GRID #1 TO ALL OTHER ELECTRODES	6	μμf

OPTICAL DATA

PHOSPHOR NUMBER			NO. 4
FLUORESCENT COLOR			WHITE
PHOSPHORESCENT COLOR			WHITE
PERSISTENCE			MEDIUM
FACEPLATE LIGHT TRANSMISSION AT CENTER (APPROX.)		65	PERCENT
SPECULAR REFLECTION OF AMBIENT LIGHT	**16GP4B**	2.5	PERCENT

MECHANICAL DATA

OVERALL LENGTH	17 11/16	INCHES
GREATEST DIAMETER OF BULB	15 7/8 ± 1/8	INCHES
MINIMUM USEFUL SCREEN DIAMETER	14 3/8	INCHES
BULB CONTACT	METAL SHELL LIP	
BASE	SMALL SHELL DUODECAL 5 PIN	B5-S7
BASING		12D

PIN CONNECTIONS

PIN 1 - HEATER
PIN 2 - GRID NO. 1
PIN 10 - GRID NO. 2
PIN 11 - CATHODE

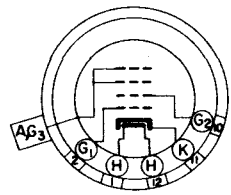

BOTTOM VIEW

PIN 12 - HEATER
METAL SHELL LIP:
ANODE
GRID NO. 3

CONTINUED ON FOLLOWING PAGE

PRINTED IN U.S.A.

CONTINUED FROM PRECEDING PAGE

RATINGS

DESIGN CENTER VALUES

HEATER VOLTAGE	6.3	VOLTS
HEATER CURRENT	0.6	AMP.
MAXIMUM DC ANODE, GRID 3 VOLTAGE[A]	14 000	VOLTS
MAXIMUM DC GRID #2 VOLTAGE	410	VOLTS
MAXIMUM GRID #1 VOLTAGE:		
DC NEGATIVE-BIAS VALUE	125	VOLTS
DC POSITIVE-BIAS VALUE	0	VOLTS
POSITIVE-PEAK VALUE	2	VOLTS
MAXIMUM DC PEAK HEATER-CATHODE VOLTAGE:		
HEATER NEGATIVE WITH RESPECT TO CATHODE		
DURING WARM-UP PERIOD NOT TO EXCEED 15 SECONDS	410	VOLTS
AFTER EQUIPMENT WARM-UP PERIOD	150	VOLTS
HEATER POSITIVE WITH RESPECT TO CATHODE	150	VOLTS

[A]THE PRODUCT OF ANODE VOLTAGE AND AVERAGE ANODE CURRENT SHOULD BE LIMITED TO 6 WATTS.

TYPICAL OPERATING CONDITIONS AND CHARACTERISTICS

DC ANODE, GRID #3 VOLTAGE[B]	12 000	VOLTS
DC GRID #2 VOLTAGE	300	VOLTS
DC GRID #1 VOLTAGE[C]	-33 TO -77	VOLTS
DC FOCUSING COIL CURRENT (APPROX.)[D]	100	MA.
ION TRAP MAGNET (RATED STRENGTH)	23	GAUSSES
16GP4A AND 16GP4B ONLY	35	GAUSSES

[B]BRILLIANCE AND DEFINITION DECREASE WITH DECREASING ANODE VOLTAGE. IN GENERAL, THE ANODE VOLTAGE SHOULD NOT BE LESS THAN 12,000 VOLTS.

[C]VISUAL EXTINCTION OF UNDEFLECTED FOCUSED SPOT.

[D]FOR STANDARD FOCUS COIL #109, OR EQUIVALENT, WITH THE COMBINED GRID #1 BIAS VOLTAGE AND VIDEO SIGNAL VOLTAGE ADJUSTED TO PRODUCE A HIGHLIGHT BRIGHTNESS OF 30 FOOT LAMBERTS ON A 10" BY 13 1/4" PICTURE SIZE. DISTANCE FROM REFERENCE LINE TO CENTER OF AIR GAP ON FOCUS COIL SHALL BE 3 INCHES.

CIRCUIT VALUES

MAXIMUM GRID #1 CIRCUIT RESISTANCE	1.5	MEGOHMS

TUNG-SOL

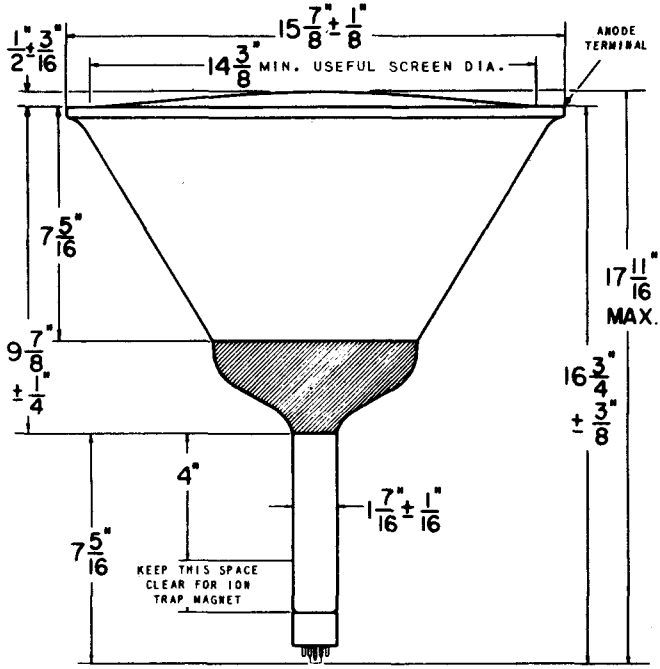

PRINTED IN U.S.A.