Electronic TUBES

16AP4-A

CATHODE-RAY TUBE

16-INCH ROUND, METAL
FOCUS—MAGNETIC
DEFLECTION—MAGNETIC

14⅜ BY 10¾-INCH PICTURE SIZE
FACEPLATE—SPHERICAL, GRAY
ION-TRAP GUN

53-DEGREE DEFLECTION ANGLE

DESCRIPTION AND RATING

The 16AP4-A is a magnetic-focus and -deflection direct-view picture tube which provides a 14⅜ by 10¾-inch picture with rounded sides for television applications. Features of this tube include a lightweight metal cone envelope, a high-quality gray faceplate to increase picture contrast and detail under high ambient light conditions, and an electron gun which was designed for use with an external double-field ion-trap magnet.

GENERAL

ELECTRICAL

Heater Voltage . . . . . 6.3 Volts
Heater Current . . . . . 0.6 ±10% Amperes

Focusing Method—Magnetic
Deflecting Method—Magnetic
Deflection Angle, approximate . . . . . 53 Degrees

Direct Interelectrode Capacitances, approximate
Cathode to All Other Electrodes . . . . . 5 μμf
Grid-No. 1 to All Other Electrodes . . . . . 6 μμf

OPTICAL

Phosphor Number—P4, Sulfide Type
Fluorescent Color—White
Phosphorescent Color—White
Persistence—Short

Faceplate—Gray
Light Transmission at Center, approximate . . . . . 66 Percent

GENERAL ELECTRIC

Supersedes ETR-118, dated 2-51

MECHANICAL

Over-all Length	21⅞ ± ⅜	Inches
Greatest Bulb Diameter	15⅞ ± ⅛	Inches
Minimum Useful Screen Diameter	14⅜	Inches
Neck Length	7 9/16	Inches

Bulb Contact—Metal Cone Lip
Base—Small-shell Duodecal 5-pin, JETEC No. B5-57
Basing, JETEC Designation—12D

Mounting Position—Any

Net Weight, approximate	11	Pounds

MAXIMUM RATINGS♦

DESIGN-CENTER VALUES*

Anode Voltage†	14,000	Max Volts DC
Grid-No. 2 Voltage	410	Max Volts DC
Grid-No. 1 Voltage		
Negative-Bias Value	125	Max Volts DC
Positive-Bias Value	0	Max Volts DC
Positive-Peak Value	2	Max Volts
Peak Heater-Cathode Voltage		
Heater Negative with Respect to Cathode		
During Warm-up Period not to Exceed 15 Seconds	410	Max Volts
After Equipment Warm-up Period	150	Max Volts
Heater Positive with Respect to Cathode	150	Max Volts

TYPICAL OPERATING CONDITIONS♦

Anode Voltage‡	12,000	Volts DC
Grid-No. 2 Voltage	300	Volts DC
Grid-No. 1 Voltage§	−28 to −72	Volts DC
Focusing-Coil Currentπ, approximate	99	Milliamperes DC
Ion-Trap Field Intensity△, approximate	35	Gausses

CIRCUIT VALUES

Grid-No. 1 Circuit Resistance	1.5	Max Megohms

♦ All voltages are measured with respect to cathode.

* The maximum ratings provide a ten-percent safety factor in accordance with the standard design-center system of rating cathode-ray tubes. The tube will withstand the combined effects of variations in line voltage and components provided the maximum design-center values are not exceeded by more than ten percent.

† Anode and grid-No. 3 which are connected together within the tube are referred to herein as anode.

‡ Brightness and focus quality decrease with decreasing anode voltage. In general, the anode voltage should not be less than 10,000 volts.

§ For visual extinction of focused raster.

π For RETMA focusing coil No. 109 with distance from the yoke-reference-line to center-of-air-gap equal to 3¾ inches.

△Double-field ion-trap magnet adjusted to optimum position, equivalent to 120 milliamperes through RETMA ion-trap magnet No. 108.

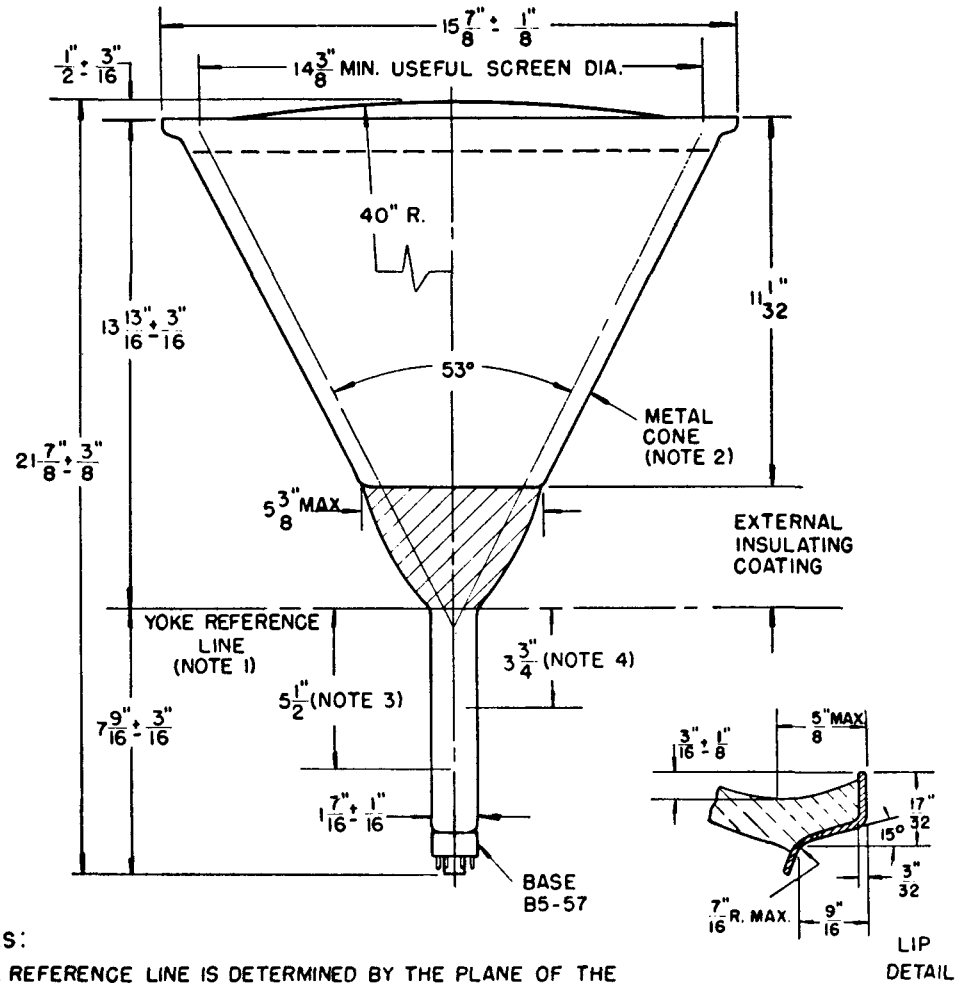

NOTES:

1. REFERENCE LINE IS DETERMINED BY THE PLANE OF THE UPPER EDGE OF THE REFERENCE-LINE GAGE (RETMA NO.112) WHEN THE GAGE IS RESTING ON THE CONE.
2. METAL CONE OPERATES AT HIGH VOLTAGE AND MUST BE INSULATED TO WITHSTAND THE MAXIMUM APPLIED ANODE VOLTAGE.
3. APPROXIMATE POSITION OF ION-TRAP MAGNET.
4. RECOMMENDED POSITION FOR CENTER OF FOCUSING FIELD.

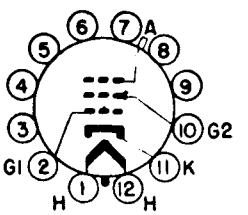

BASING DIAGRAM
12D