DU MONT

CATHODE-RAY TUBE

TYPE 16AGP-

The Du Mont Type 16AGP- is a 16-inch diameter, curved face, single beam, electrostatic focus and magnetic deflection cathode-ray tube suitable for radar applications. A low-voltage electrostatic focus lens is employed, designed to operate at or near cathode potential to afford substantially automatic focus, independent of accelerator voltage variations. The tube utilizes a metal envelope.

GENERAL CHARACTERISTICS

Electrical Data

Focusing Method	Electrostatic		
Deflection Method	Magnetic		
Deflection Angle, Approximate	53		Degrees
Direct Interelectrode Capacitances	Min.	Max.	
Cathode to all other electrodes	3	6	μμf
Grid No. 1 to all other electrodes	5.5	9.5	μμf

Optical Data

Phosphor Number	7	14	19
Fluorescence	White	Blue	Orange
Phosphorescence	Yellow-Green	Orange	Orange
Persistence	Long	Medium	Long

Mechanical Data

Overall Length	21 1/2 ± 3/8	Inches
Greatest Diameter of Bulb	15 7/8 ± 1/8	Inches
Minimum Useful Screen Diameter [1]	14 3/8	Inches
Bulb Contact	Metal Cone Lip	
Base	B7-51	
Basing	12M	

MAXIMUM RATINGS (Absolute Maximum Values)

Heater Voltage	6.3	Volts
Heater Current at 6.3 Volts	0.6 ± 10%	Ampere
Accelerator Voltage [2]	16,500	Max. Volts DC
Focusing Electrode Voltage	-550 to +1100	Max. Volts DC
Grid No. 2 Voltage	770	Max. Volts DC

CATHODE-RAY TUBE

TYPE 16AGP-

MAXIMUM RATINGS (Absolute Maximum Values) (Continued)

Grid No. 1 Voltage		
Negative Bias Value	180	Max. Volts DC
Positive Bias Value [2]	0	Max. Volts DC
Positive Peak Value	0	Max. Volts
Peak Heater-Cathode Voltage		
Heater negative with respect to cathode	180	Max. Volts
Heater positive with respect to cathode	180	Max. Volts

TYPICAL OPERATING CONDITIONS

Accelerator Voltage [3]	12,000	Volts DC
Focusing Electrode Voltage [4]	-135 to +400	Volts DC
Focusing Electrode Current	-15 to +15	μADC
Grid No. 2 Voltage	300	Volts DC
Grid No. 1 Voltage [5]	-35 to -75	Volts DC
Line Width "A" [6]	.018	Inch Max.
Spot Position [7]	5/8	Inch

MAXIMUM CIRCUIT VALUES

Grid No. 1 Circuit Resistance	1.5	Max. Megohms

NOTES

1. For metalized tubes the minimum useful screen diameter will be 13 5/8 inches.

2. Accelerator power input (average) should be limited to six watts. The 16AGP19 screen can be permanently damaged if the current density is permitted to rise too high. To prevent burning, minimum beam current densities should be employed.

Allen B. Du Mont Laboratories
Divisions of Fairchild Camera and Instrument Corp.
Clifton, New Jersey

FORM 8098

DUMONT

CATHODE-RAY TUBE

TYPE 16AGP-

NOTES
(Continued)

3. Brilliance and definition decrease with decreasing accelerator voltage. In general, accelerator voltage should not be less than 9000 volts.

4. With Grid No. 1 voltage adjusted to produce an accelerator current of 20 μA and the pattern adjusted for best overall focus. Measured with a 525-line, 9 x 9-inch pattern.

5. Visual extinction of the focused, undeflected spot.

6. Measured with a 525-line pattern adjusted to 90% of minimum useful screen diameter at Ib = 100 μA. Line width is the merged raster height divided by the number of lines (525) (measured in the center of tube face).

   To avoid damage to the screen of the 16AGP19, it is recommended that the screen current be not more than 50 μA when measuring line width. The line width under this condition will be .017 inch maximum.

7. The center of the undeflected, focused spot will fall within a circle of 5/8-inch radius concentric with the center of the tube face, with tube shielded.

Allen B. Du Mont Laboratories
Divisions of Fairchild Camera and Instrument Corp.
Clifton, New Jersey

FORM 8094

DU MONT

CATHODE-RAY TUBE
TYPE 16AGP-

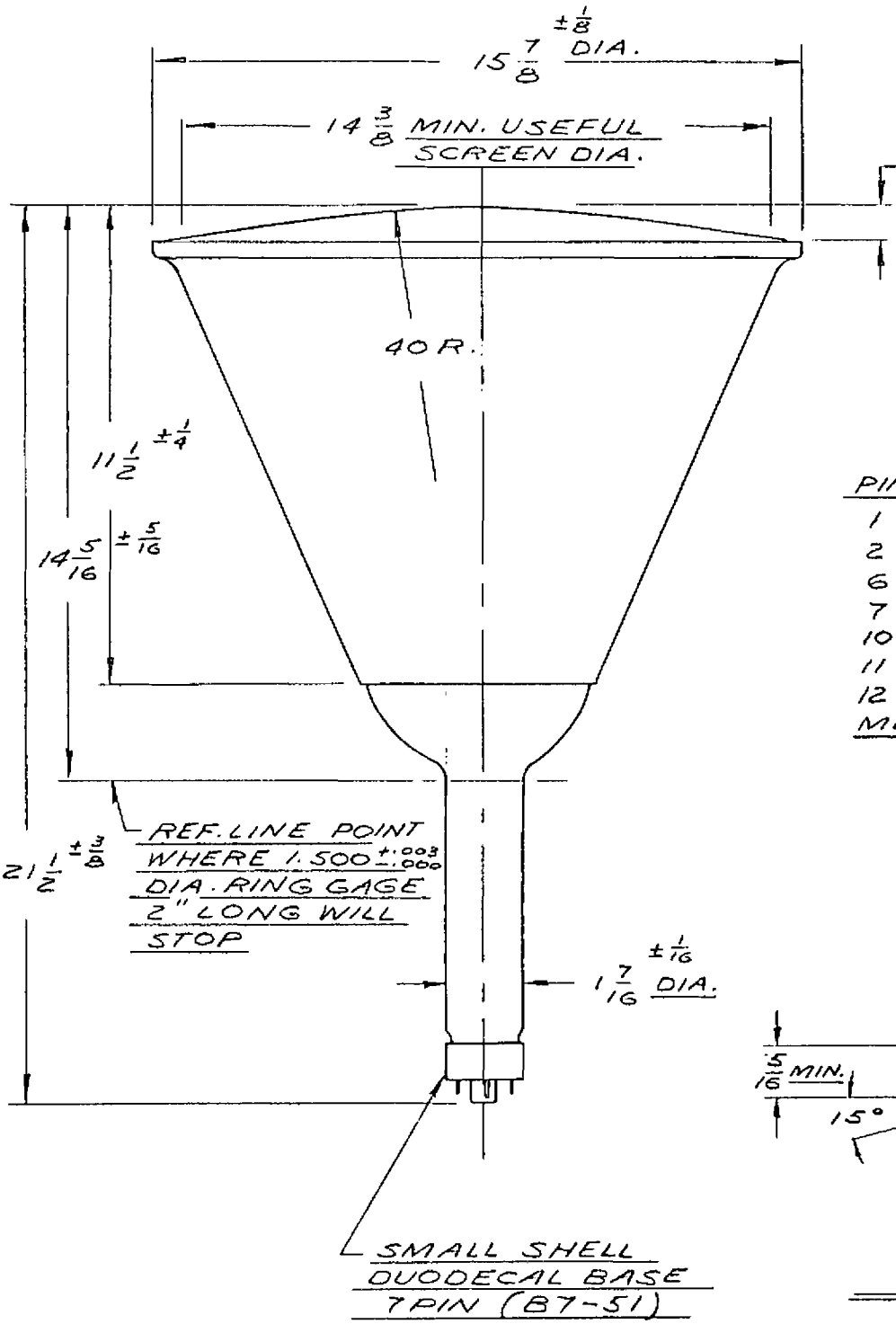

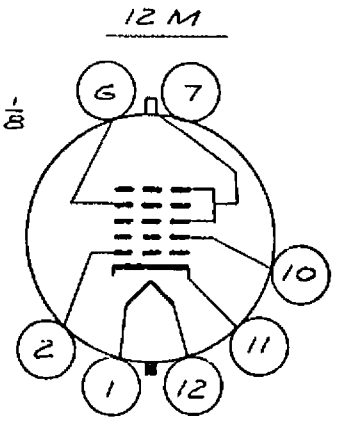

BOTTOM VIEW

PIN NO.	ELEMENT
1	HEATER
2	GRID NO. 1
6	FOCUS. ELECT.
7	NO CONNECT.
10	GRID NO. 2
11	CATHODE
12	HEATER
METAL CONE	ACCELERATOR

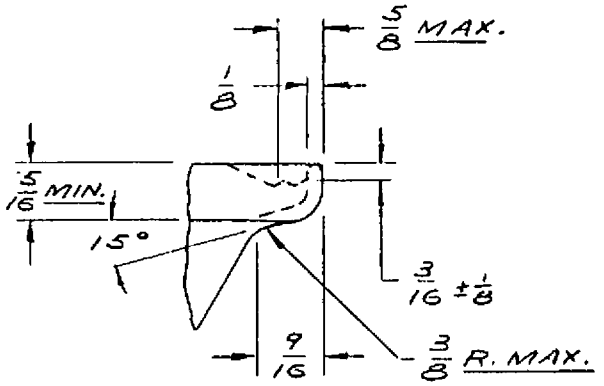

LIP DETAIL

DD 30601-A
5.29.63

Allen B. Du Mont Laboratories, Inc.
Divisions of Fairchild Camera and Instrument Corp.
Clifton, New Jersey

FORM 609 -M1-5-60-2H