15D12

RADIATION COOLED TRIODE

Directly heated

GENERAL

The 15D12 is a directly heated radiation cooled triode. It has a graphite anode, a thoriated tungsten filament and is intended for use in r.f. heating equipment.

RATING

Filament Voltage	V_f	6·3	V
Filament Current	I_f	31—34*	A
Maximum Peak Anode Voltage	$v_{a(pk)max}$	6·0	kV
Maximum Anode Dissipation	$P_{a(max)}$	800**	W
Maximum Grid Dissipation	$P_{g(max)}$	60	W
Maximum Peak Cathode Current	$i_{k(pk)max}$	4·0	A
Maximum Operating Frequency	f_{max}	60	Mc/s
Maximum Seal Temperature	$T_{seal(max)}$	200	°C
Maximum Bulb Temperature	$T_{bulb(max)}$	250	°C

* The filament is suitable for direct switching without additional current limitations and will withstand fluctuations in voltage of ±5%.

** At this dissipation the anode runs at approximately 900°C (Optical reading)

All limiting values are Absolute, not Design Centres.

INTER-ELECTRODE CAPACITANCES

Anode/Grid	C_{a-g}	6·5	pF
Grid/Filament	C_{g-f}	13	pF
Anode/Filament	C_{a-f}	0·5	pF

CHARACTERISTICS

Anode Voltage	V_a	4·0	kV
Anode Current	I_a	200	mA
Mutual Conductance	g_m	5·6	mA/V
Amplification Factor	μ	23	
Anode Resistance ($\delta v_a/\delta i_a$)	r_a	4·1	kΩ

Associated Electrical Industries Limited

Electronic Components Department

Tel: GERrard 9797

15D12

RADIATION COOLED TRIODE

Directly heated

TYPICAL OPERATION—At maximum operating conditions per valve.

Class B1 audio amplification—push pull operation.

Anode Voltage	V_a	6·0	kV
A.C. Anode Current (r.m.s.)	I_a(r.m.s.)	0·4	A
Power Input	P_{in}	1·5	kW
Power Output	P_{out}	0·7	kW
Anode Dissipation	p_a	0·8	kW
Anode Efficiency		48	%
Bias Voltage	V_g	−225	V
Peak Signal Voltage	$v_{sig(pk)}$	225	V

TYPICAL OPERATION—At maximum operating conditions.

Class C self oscillator—single phase full wave rectified (no smoothing)

		Mean	R.M.S.	Peak	
Anode Voltage	V_a	3·8	4·25	6·0	kV
Bias Voltage	V_g	−150			V
Positive Grid Voltage	V_{sig}	180			V
Grid Resistor		1·05			kΩ
Anode Current	I_a	625		1700	mA
Grid Current	I_g	140		800	mA
Cathode Current	I_k	2·55	2·8	4·0	A
Anode Dissipation	p_a	800			W
Grid Drive Power		55			W
Grid Dissipation	p_g	25			W
Anode Efficiency		72			%
Power Output (amplifier)	P_{out}	2·1			kW
Power Output (oscillator) at 100% Transfer Efficiency	P_{out}	2·05			kW
Power Output (oscillator) at 85% Transfer Efficiency	P_{out}	1·75			kW

Associated Electrical Industries Limited

Electronic Components Department

Tel: GERrard 9797

15D12

RADIATION COOLED TRIODE

Directly heated

TYPICAL OPERATION—At maximum operating conditions.

Class C self oscillator—3-phase full wave rectified or d.c.

		Mean	R.M.S.	Peak	
Anode Voltage	V_a	4·0	5·0	6·0	kV
Bias Voltage	V_g	–260	–340	–500	V
Positive Grid Voltage	V_{sig}	260	260	240	V
Grid Resistor		1·2	1·65	3·35	kΩ
Mean Anode Current	$I_{a(av)}$	815	780	660	mA
Mean Grid Current	$I_{g(av)}$	220	205	150	mA
Peak Cathode Current	$i_{k(pk)}$	4·0	4·0	4·0	A
Peak Anode Current	$i_{a(pk)}$	2·8	2·8	3·0	A
Peak Grid Current	$i_{g(pk)}$	1·2	1·2	1·0	A
Anode Dissipation	P_a	800	800	800	W
Grid Drive Power		105	115	105	W
Grid Dissipation	P_g	50	45	30	W
Anode Efficiency		76	79	80	%
Power Output (amplifier)	P_{out}	2·5	3·1	3·2	kW
Power Output (oscillator) at 100% Transfer Efficiency	P_{out}	2·4	3·0	3·1	kW
Power Output (oscillator) at 85% Transfer Efficiency	P_{out}	2·0	2·5	2·6	kW

TYPICAL OPERATION—At maximum operating conditions.

Class C self oscillator—single phase self rectified.

Anode Voltage	V_a	1·9	3·0	6·0	kV
Bias Voltage	V_g	–20			V
Positive Grid Voltage	V_{sig}	120			V
Grid Resistor		195			Ω
Anode Current	I_a	430		900	mA
Grid Current	I_g	100		500	mA
Cathode Current	I_k	1·25	2·0	4·0	A
Anode Dissipation	P_a	800			W
Grid Drive Power		31			W
Grid Dissipation	P_g	29			W
Anode Efficiency		63			%
Power Output (amplifier)	P_{out}	1·25			kW
Power Output (oscillator) at 100% Transfer Efficiency	P_{out}	1·2			kW
Power Output (oscillator) at 85% Transfer Efficiency	P_{out}	1·0			kW

Associated Electrical Industries Limited

Electronic Components Department

Tel: GERrard 9797

15D12

RADIATION COOLED TRIODE

Directly heated

DIMENSIONS

Maximum Overall Length	254 mm
Maximum Diameter	152 mm

MOUNTING POSITION—Vertical, anode upwards.

TOP CAP—Anode

BASE—Special

OPERATING INSTRUCTIONS

Installation

The valve should be mounted vertically with the anode upwards. Connections should always make good electrical contact to prevent overheating pins and seals, particularly by r.f. current.

It is essential that connection be made to both grid pins when running at higher frequencies to reduce current taken by each pin. The valve must be protected against excessive vibration and shock.

Cooling

Forced air blast is recommended for all conditions of valve service except filament dissipation alone.

An air flow of 50 cu. ft./min. directed vertically upwards on to the grid and filament pins is ample.

The anode connector should be designed to keep the temperature of the anode seal below the maximum temperature stated.

Operation

The operating data list conditions for maximum output for respective classes of service at the relevant anode voltage. Linear interpolation between anode voltage steps is admissible. As these conditions utilize some or all of the maximum valve ratings, close control of conditions has to be maintained.

In Class C self oscillator service, precautions should be taken against excessive mains voltage variation. Current overload trips should be included in anode and grid circuits as well as an under current trip in the grid circuit.

In industrial r.f. heating it is not usual that all precautions can be taken, and under these conditions some reductions in operating conditions have to be made so that widely fluctuating loads, poor h.t. regulation, and mains variations can be accommodated. Each type of variation brings its own problems and no set rules are practicable.

Associated Electrical Industries Limited

Electronic Components Department

Tel: GERrard 9797

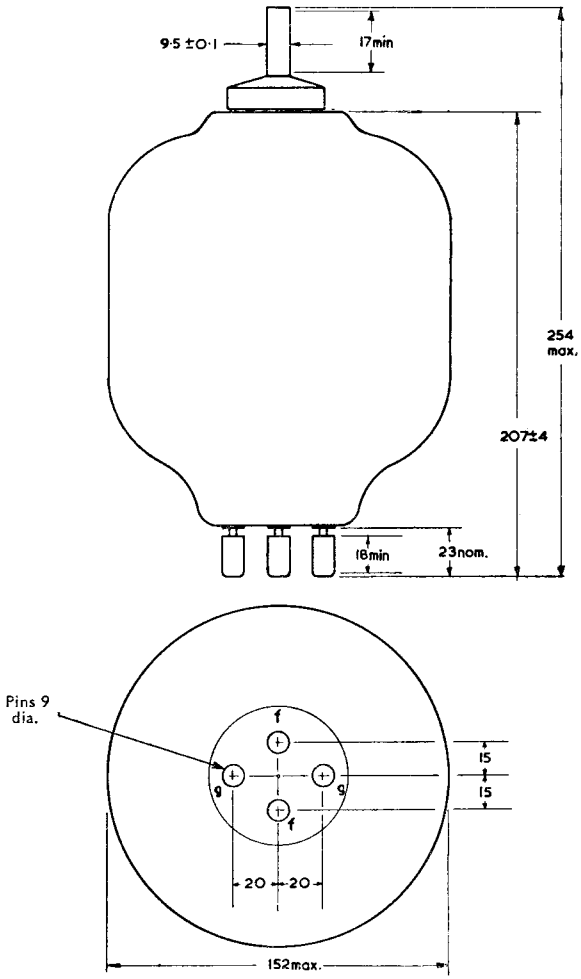

All dimensions in mm.

Associated Electrical Industries Limited
Radio Components Department
Tel : GERrard 9797

CONSTANT CURRENT CHARACTERISTICS

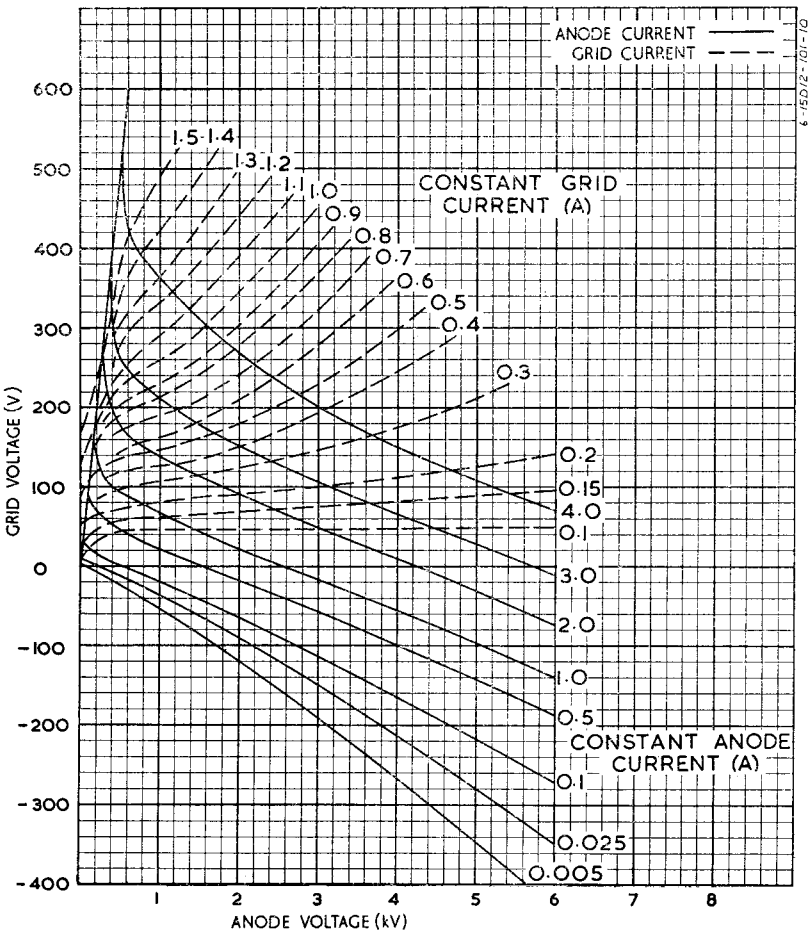

CHARACTERISTIC CURVES : V_a/I_g

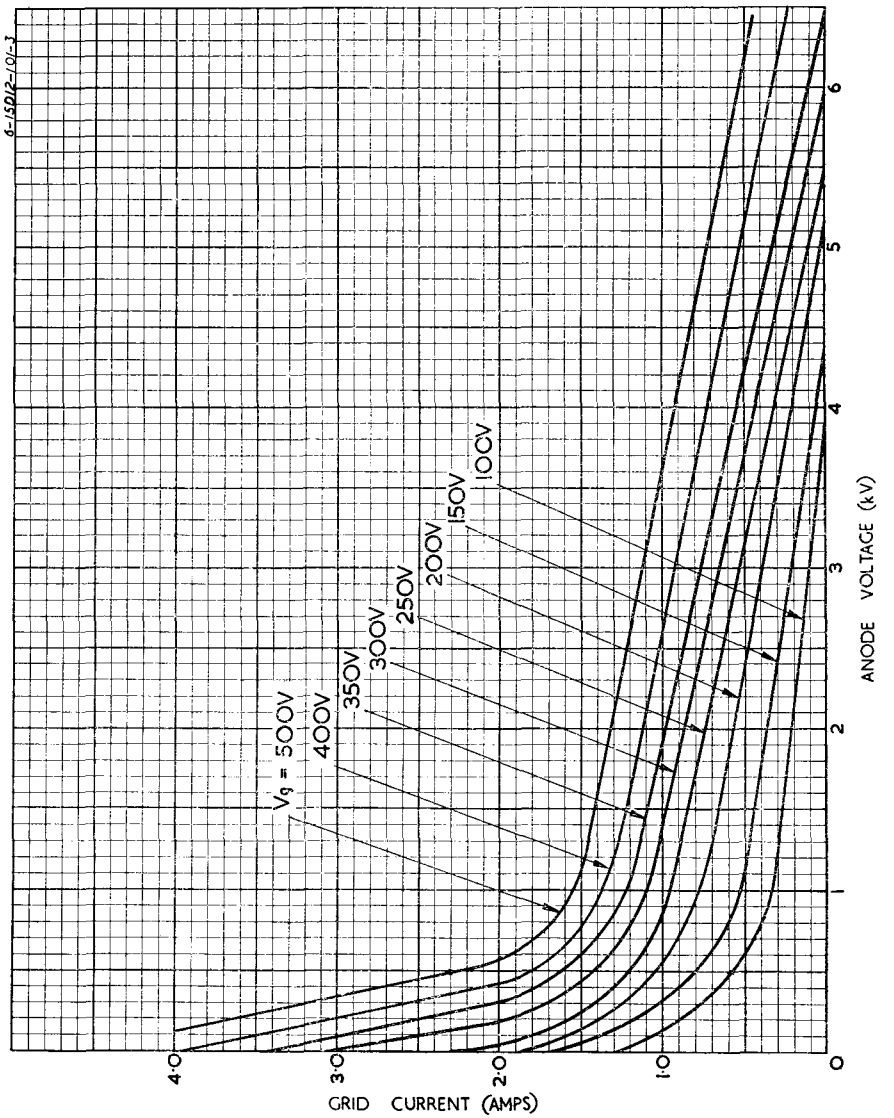

Associated Electrical Industries Limited
Radio Components Department
Tel : GERrard 9797
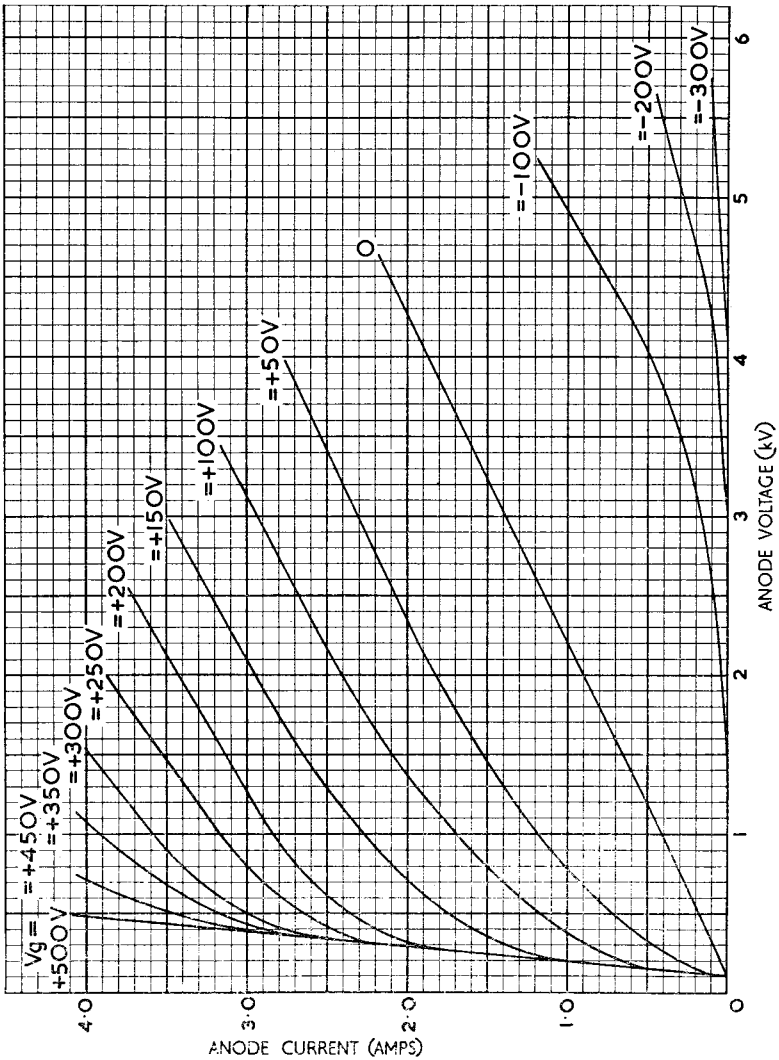
CHARACTERISTIC CURVES: I_a/V_a