SYLVANIA

engineering data service

SYLVANIA
14XP4
14XP4A

CHARACTERISTICS

GENERAL DATA

Focusing Method	Electrostatic
Deflection Method	Magnetic
Deflection Angle (approx.)	
Horizontal	79 Degrees
Diagonal	85 Degrees
Phosphor	
14XP4	P4
14XP4A	Aluminized P4
Fluorescence	White
Persistence	Short to Medium
Faceplate	Gray Filter Glass
Light Transmittance (approx.)	78 Percent

ELECTRICAL DATA

Heater Voltage	6.3 Volts	
Heater Current	0.450 ± 5% Ampere	
Heater Warm-up Time[1]	11 Seconds	
Direct Interelectrode Capacitances (approx.)		
Cathode to All Other Electrodes	5 μμf	
Grid No. 1 to All Other Electrodes	6 μμf	
External Conductive Coating to Anode[2]	1500 μμf	Max.
	1100 μμf	Min.
Ion Trap Magnet	External, Single Field Type	

MECHANICAL DATA

Minimum Useful Screen Dimensions (Maximum Assured)	12 1/16 x 9 1/2 Inches
Minimum Useful Screen Area	104 Sq. Inches
Bulb Contact (Recessed Small Cavity Cap)	J1-21
Base (Small Shell Duodecal 6-Pin)	B6-63
Basing	12L

RATINGS

MAXIMUM RATINGS (Absolute Maximum Values)

Anode Voltage	16,500 Volts dc
Grid No. 4 Voltage (Focusing Electrode)	−550 to +1100 Volts dc
Grid No. 2 Voltage	440 Volts dc
Grid No. 1 Voltage	
Negative Bias Value	140 Volts dc
Negative Peak Value	180 Volts
Positive Bias Value	0 Volts dc
Positive Peak Value	2 Volts
Peak Heater-Cathode Voltage	
Heater Negative with Respect to Cathode	
During Warm-up Period not to Exceed 15 Seconds	450 Volts
After Equipment Warm-up Period	200 Volts
Heater Positive with Respect to Cathode	200 Volts

TYPICAL OPERATING CONDITIONS

Anode Voltage	12,000 Volts dc
Grid No. 4 Voltage for Focus	−50 to +350 Volts dc
Grid No. 2 Voltage	300 Volts dc
Grid No. 1 Voltage Required for Cutoff[3]	−28 to −72 Volts dc
Ion Trap Magnet Current (Average)[4]	28 Ma dc
Field Strength of PM Ion Trap Magnet[5]	30 Gausses Min.

CIRCUIT VALUES

Grid No. 1 Circuit Resistance	1.5 Megohms Max.

QUICK REFERENCE DATA

Television Picture Tube
14" Direct Viewed
Rectangular Glass Type
Spherical Faceplate
Gray Filter Glass
Magnetic Deflection
Electrostatic Focus
Single Field Ion Trap
External Conductive Coating
450 Ma Heater Current
14XP4A has Aluminized Screen

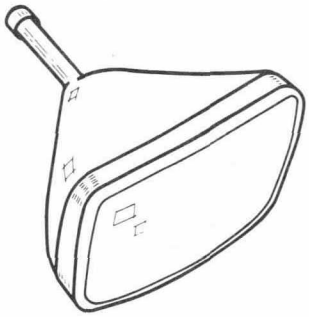

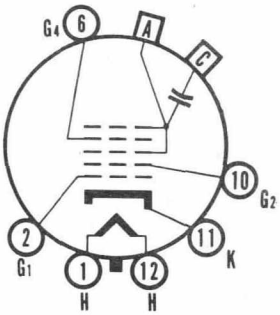

12-L

SYLVANIA ELECTRIC PRODUCTS INC.

TELEVISION PICTURE TUBE DIVISION

SENECA FALLS, NEW YORK

Prepared and Released By The
TECHNICAL PUBLICATIONS SECTION
EMPORIUM, PENNSYLVANIA

DEC. 1956

NOTES:

1. *Heater warm-up time is the time required for the voltage across the heater terminals to increase to 5.0 volts in the JETEC test circuit, with E = 25 volts and series R = 42 ohms.*
2. *External conductive coating must be grounded.*
3. *Visual extinction of focused raster. Extinction of stationary focused spot will require that these values be about 5 volts more negative.*
4. *For JETEC Ion Trap Magnet No. 117 with pole pieces centered over Grid No. 2 on mount, and rotated for maximum brightness.*
5. *For typcial PM ion trap magnet with field strength tolerance of ±3 gausses.*

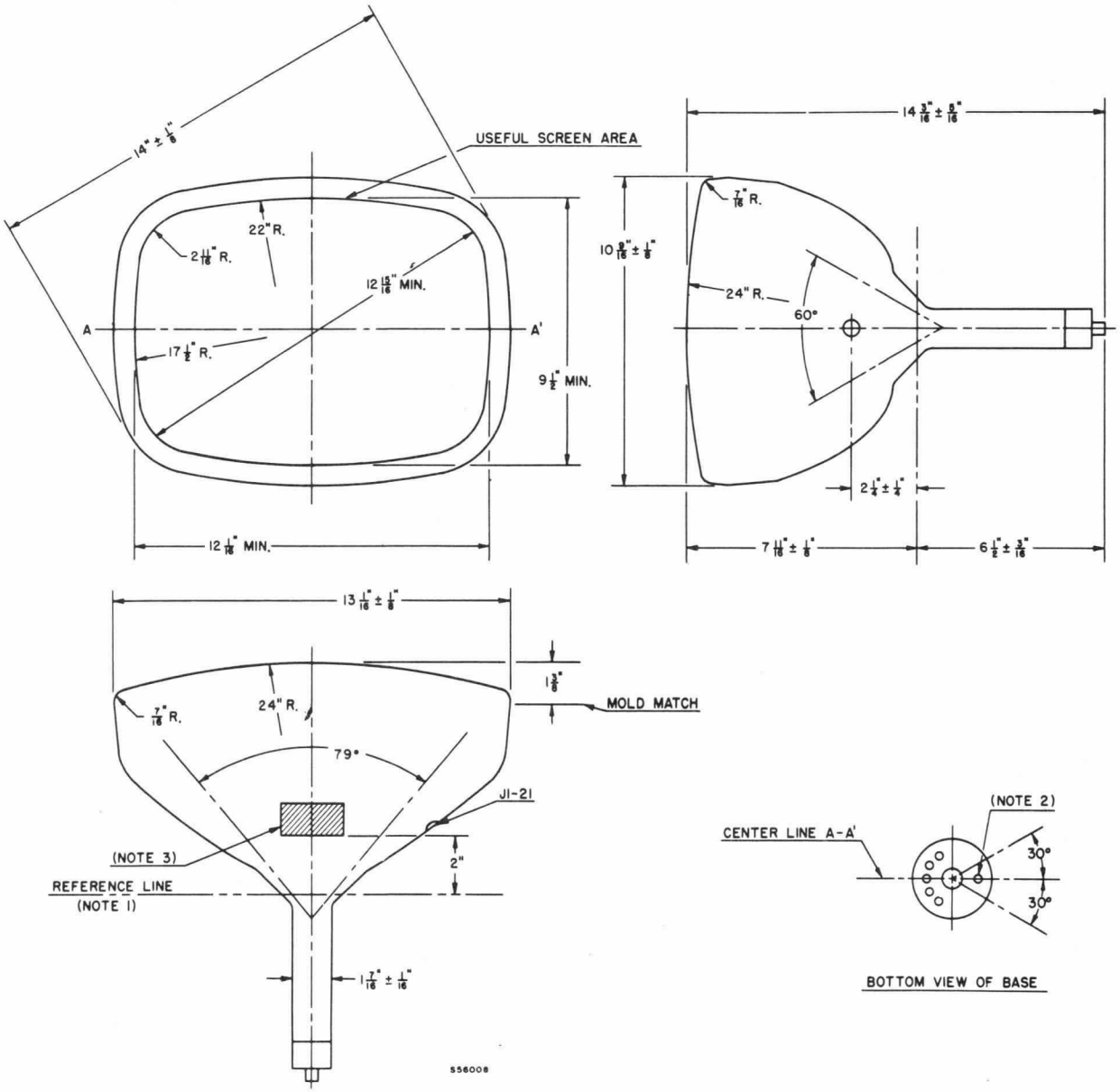

DIAGRAM NOTES:

1. *Reference line is determined by the plane C-C' of the reference line gauge (JETEC No. 116) when the gauge is resting on the glass cone.*
2. *Base pin No. 6 aligns with anode contact terminal J1-21 within 30 degrees.*
3. *Contact area for external conductive coating, 2" x 2", located 90 degrees counterclockwise from anode contact as viewed from base end of tube.*
4. *Dimensions are in inches.*

14XP4A

The Sylvania Type 14XP4A is identical to Type 14XP4 except it has an aluminized screen.

WARNING:

X-ray radiation shielding may be necessary to protect against possible danger of personal injury from prolonged exposure at close range if this tube is operated at higher than the manufacturer's Maximum Rated Anode Voltage or 16,000 volts, whichever is less.