SYLVANIA

engineering data service

SYLVANIA

14QP4
14QP4A

CHARACTERISTICS

GENERAL DATA

Focusing Method	Electrostatic
Deflecting Method	Magnetic
Deflection Angles (approx.)	
Horizontal	65 Degrees
Diagonal	70 Degrees
Phosphor	P4
Fluorescence	White
Persistence	Short to Medium
Faceplate	Gray Filter Glass
Light Transmittance (approx.)	76 Percent

ELECTRICAL DATA

Heater Voltage	6.3 Volts	
Heater Current	0.6±5% Ampere	
Heater Warm-up Time[1]	11 Seconds	
Direct Interelectrode Capacitances (approx.)		
Cathode to All Other Electrodes	5 μμf	
Grid No. 1 to All Other Electrodes	6 μμf	
External Conductive Coating to Anode[2]	900 μμf	Max.
	600 μμf	Min.

Ion Trap Magnet External, Single Field Type

MECHANICAL DATA

Minimum Useful Screen Dimensions (maximum assured)	11½ x 8⅝ Inches
Minimum Useful Screen Area	96 Sq. Inches
Bulb Contact (Recessed Small Cavity Cap)	J1-21
Base (Small Shell Duodecal 6-Pin)	B6-63
Basing	12 L

RATINGS

MAXIMUM RATINGS (Absolute Maximum Values)

Anode Voltage	12,100 Volts	DC
Grid No. 4 Voltage (Focusing Electrode)	−550 to + 1100 Volts	DC
Grid No. 2 Voltage	550 Volts	DC
Grid No. 1 Voltage		
Negative Bias Value	155 Volts	DC
Negative Peak Value	220 Volts	
Positive Bias Value	0 Volts	DC
Positive Peak Value	2 Volts	
Peak Heater-Cathode Voltage		
Heater Negative with Respect to Cathode		
During Warm-up Period not to Exceed 15 Seconds	450 Volts	
After Equipment Warm-up Period	200 Volts	
Heater Positive with Respect to Cathode	200 Volts	

TYPICAL OPERATING CONDITIONS

Anode Voltage	9,000 Volts	DC
Grid No. 4 Voltage for Focus	−50 to +250 Volts	DC
Grid No. 2 Voltage	250 Volts	
Grid No. 1 Voltage Required for Cutoff[3]	−24 to −64 Volts	DC
Ion Trap Magnet Current (Average)[4]	24 Ma	DC
Field Strength of PM Ion Trap Magnet[5]	24 Gausses	Min.

CIRCUIT VALUES

Grid No. 1 Circuit Resistance	1.5 Megohms	Max.

QUICK REFERENCE DATA

Television Picture Tube
14" Direct Viewed
Rectangular Glass Type
Spherical Faceplate
Gray Filter Glass
Magnetic Deflection
Electrostatic Focus
Single Field Ion Trap
External Conductive Coating
14QP4A has Aluminized Screen

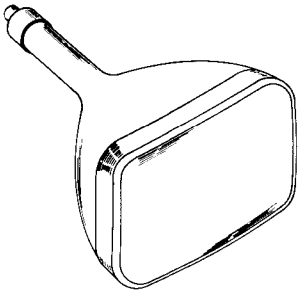

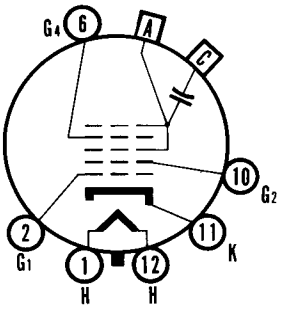

12-L

SYLVANIA ELECTRIC PRODUCTS INC.

RADIO TUBE DIVISION
EMPORIUM, PA.

Prepared and Released By The
TECHNICAL PUBLICATIONS SECTION
EMPORIUM, PENNSYLVANIA

JULY 1956

NOTES:

1. *Heater Warm-up Time is the time required for the voltage across the heater terminals to increase to 5.0 volts in the JETEC test circuit, with E = 25 volts and series R = 31.5 ohms.*
2. *External conductive coating must be grounded.*
3. *Visual extinction of raster.*
4. *For JETEC Ion Trap Magnet No. 117.*
5. *For typical PM ion trap magnet with field strength tolerance of ±3 gausses.*

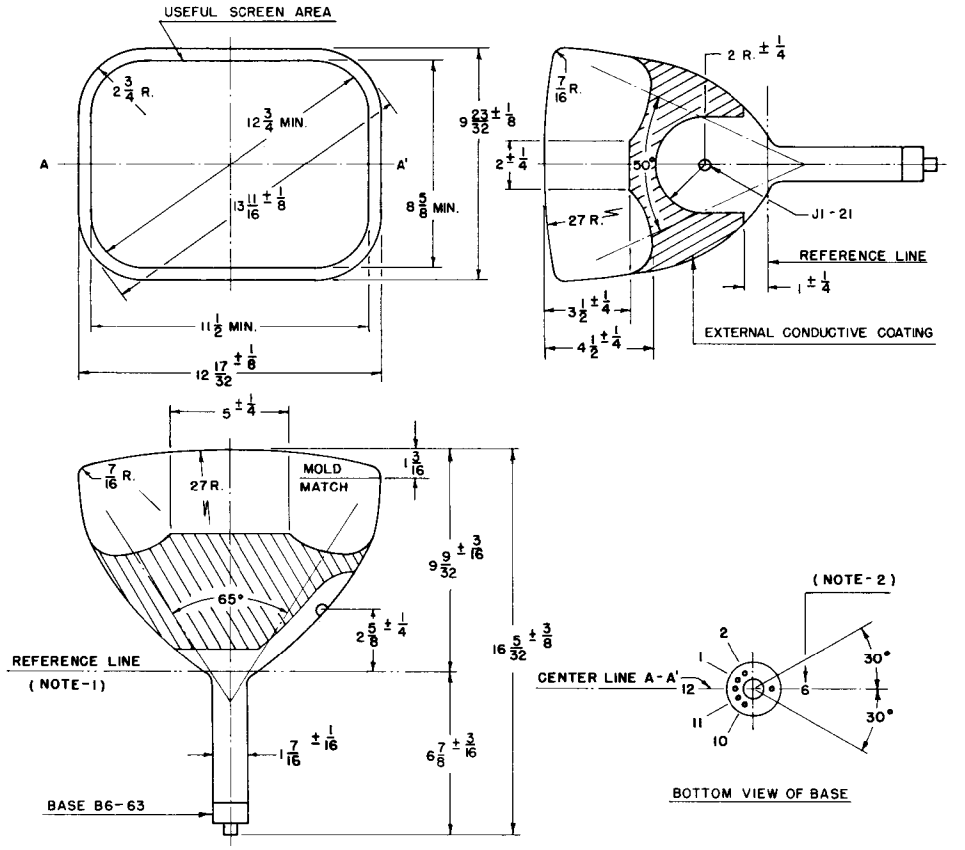

DIAGRAM NOTES:

1. *Reference line is determined by the plane C-C′ of the JETEC No. 110 reference line gauge when the gauge is resting on the tube cone.*
2. *Anode contact aligns with Pin No. 6 ±30 degrees.*
3. *All dimensions are in inches.*

14QP4A

The Sylvania Type 14QP4A is identical to Type 14QP4 except it has an aluminized screen.

WARNING:

X-ray radiation shielding may be necessary to protect against possible danger of personal injury from prolonged exposure at close range if this tube is operated at higher than the manufacturer's Maximum Rated Anode Voltage or 16,000 volts, whichever is less.