14EP4

KINESCOPE

Magnetic Focus
Magnetic Deflection
Ion-Trap Gun

Rectangular Type
Filterglass Face Plate

11-3/8" x 8-1/2" Picture Area
13-13/16" Max. Bulb Diagonal
16-7/8" Max. Length

TENTATIVE DATA

RCA-14EP4 is a short, directly viewed, rectangular picture tube for use in television receivers. It has a picture area 11-3/8" x 8-1/2". The rectangular shape, which allows reproduction of the transmitted picture without waste of screen area, permits use of a cabinet having about 20 per cent less height than is required for a round-face tube having the same picture width. Consequently, the volume as well as cost of the cabinet can be substantially decreased and its

styling can be executed to give a more pleasing frontal area. In addition, the chassis need not be depressed or cut out under the face of the tube and controls can be located as desired beneath the tube.

The 14EP4 provides pictures having high brightness and good uniformity of focus over the whole picture area. It has a high-efficiency, white fluorescent screen on a face made of Filterglass to provide increased picture contrast. The Filterglass face plate incorporates a neutral light-absorbing material which reduces ambient-light reflections from the phosphor and reflections within the face plate itself in a very much higher ratio than it reduces the directly viewed light of the picture. As a result, improved contrast is obtained.

Employing magnetic focus and magnetic deflection, the 14EP4 features an improved design of funnel-to-neck section which facilitates centering of the yoke on the neck and, in combination with better centering of the beam inside the neck, contributes to the good uniformity of focus over the entire picture area. The diagonal deflection angle is 70° and the horizontal deflection angle is 65°.

Other features incorporated in the 14EP4 are short overall length; neck length of 7-3/16 inches recently adopted for use on picture tubes having deflection angle of 70° (diagonal or diameter); an external conductive coating which, with the internal conductive coating, forms a filter capacitor; and an ion-trap gun which requires only a single-field, external magnet.

DATA

General:

Heater, for Unipotential Cathode:		
Voltage (AC or DC)	6.3	volts
Current	0.6	ampere
Direct Interelectrode Capacitances:		
Grid No.1 to All Other Electrodes	6	μμf
Cathode to All Other Electrodes	5	μμf
External Conductive Coating to Anode	2000 max.	μμf
	750 min.	μμf
Face Plate▲	Filterglass	
Phosphor	No.4—Sulfide Type	
Fluorescence	White	
Phosphorescence	White	
Persistence	Medium	
Focusing Method	Magnetic	
Deflection Method	Magnetic	
Deflection Angles (Approx.):		
Diagonal	70°	
Horizontal	65°	
Vertical	50°	
Ion-Trap Gun	Requires External, Single-Field Magnet	
Overall Length	16-1/2" ± 3/8"	
Greatest Diagonal of Tube at Face	13-11/16" ± 1/8"	
Greatest Width of Tube at Face	12-17/32" ± 1/8"	
Greatest Height of Tube at Face	9-23/32" ± 1/8"	
Screen Size	11-3/8" x 8-1/2"	

Copyright, 1950
Radio Corporation of America

Cap.	Recessed Small Cavity (JETEC No.J1-21)
Base	Small-Shell Duodecal 5-Pin (JETEC No.B5-57)
Mounting Position.	Any

Maximum Ratings, ***Design-Center Values*****:**

ANODE VOLTAGE*	14000 max.	volts
GRID-No.2 VOLTAGE.	410 max.	volts
GRID-No.1 VOLTAGE:		
Negative bias value.	125 max.	volts
Positive bias value.	0 max.	volts
Positive peak value.	2 max.	volts
PEAK HEATER-CATHODE VOLTAGE:		
Heater negative with respect to cathode:		
During equipment warm-up period not exceeding 15 seconds. .	410 max.	volts
After equipment warm-up period .	180 max.	volts
Heater positive with respect to cathode.	180 max.	volts

Typical Operation:

Anode Voltage**.	12000 . . .	volts
Grid-No.2 Voltage.	300 . . .	volts
Grid-No.1 Voltage for Visual Extinction of Undeflected Focused Spot	-33 to -77	volts
Focusing-Coil Current (DC)▲▲	96 ±6%	ma
Field Strength of Single-Field Ion-Trap Magnet# . .	45 . .	gausses
Ion-Trap Magnet Current (DC,approx.)●	70 . . .	ma

Maximum Circuit Values:

Grid-No.1-Circuit Resistance	1.5 max.	megohms

Minimum Circuit Values:

The power supply should be of the limited-energy type with inherent regulation to limit the continuous short-circuit current to 5 milliamperes. If the supply permits the instantaneous short-circuit current to exceed 1 ampere, or is capable of storing more than 250 microcoulombs, the effective resistance in circuit between indicated electrode and the output capacitor should be as follows:

Grid-No.1-Circuit Resistance . . .	150 min.	ohms
Grid-No.2-Circuit Resistance . . .	470 min.	ohms
Anode-Circuit Resistance	16000 min.	ohms

The resistors used should be capable of withstanding the applied voltage.

▲ Has transmission of about 65%.

* The product of anode voltage and average anode current should be limited to 6 watts.

** Brilliance and definition decrease with decreasing anode voltage. In general, the anode voltage should not be less than 10000 volts.

▲▲ For specimen focusing coil similar to JETEC Focusing Coil No.109 positioned with air gap toward kinescope screen, and center line of air gap 3 inches from Reference Line (see *Outline Drawing*). The indicated current is for condition with combined grid-No.1 bias voltage and video-signal voltage adjusted to produce a highlight brightness of 30 foot-lamberts on a 11-1/8" x 8-5/16" picture area sharply focused at center of screen. The indicated tolerance on focusing-coil current is on basis that distance from Reference Line to grid No.1 is controlled as shown in *Detail of Grid No.1 Position* on Outline Drawing.

\# Measured at center of field with General Electric Gauss Meter, Cat. No.409X51.

● For specimen ion-trap magnet similar to JETEC Ion-Trap Magnet No.111, located in optimum position and rotatec to give maximum brightness.

INSTALLATION and APPLICATION

The *maximum ratings* in the tabulated data for the 14EP4 are working design-center maximums established according to the standard design-center system of rating electron tubes. Tubes so rated will give satisfactory performance in equipment designed so that these maximum ratings will not be exceeded when the equipment is operated from ac or dc power-line supplies whose normal voltage including normal variations falls within ± 10 per cent of line-center voltage value of 117 volts.

When operated at or below the maximum ratings shown in the tabulated data, *the 14EP4 does not produce any harmful x-ray radiation.* All types of picture tubes may be operated at voltages (if ratings permit) up to 16 kilovolts (absolute value) without personal injury on prolonged exposure at close range. Above 16 kilovolts, special shielding precautions for x-ray radiation may be necessary.

Like other high-voltage devices, the 14EP4 requires that certain precautions be observed to minimize the possibility of failure due to humidity, dust, and corona.

Humidity Considerations. When humidity is high, a continuous film of moisture may form on the glass bulb immediately surrounding the anode cavity cap. This film may permit sparking to take place over the glass surface to the external conductive coating. Such sparking may introduce noise into the receiver. To prevent such a possibility, the uncoated bulb surface around the cap should be kept clean and dry.

Dust Considerations. The accumulation of dust on the uncoated area of the bulb around the anode cap will decrease the insulating qualities of the bulb surface. The dust usually consists of fibrous materials and may contain soluble salts. The fibers absorb and retain moisture; the soluble salts provide electrical leakage paths that increase in conductivity as the humidity increases. The resulting high leakage currents may overload the high-voltage power supply. It is recommended, therefore, that the uncoated bulb surface be kept clean and free from dust or other contamination such as finger prints.

Corona Considerations. A high-voltage system may be subject to corona, especially when the humidity is high, unless suitable precautions are taken. Corona, which is an electrical discharge appearing on the surface of a conductor when the voltage gradient exceeds the breakdown value of air, causes deterioration of organic insulating materials through formation of ozone, and induces arc-over at points and sharp edges. Sharp points or other irregularities on any part of the high-voltage system increase the possibility of corona and should be avoided. Instead, rounded corners and surfaces should be used.

As a further precaution to prevent corona, the deflecting-yoke surface on the end adjacent to the funnel should present a smooth electrical surface with respect to the anode terminal. The end of the yoke windings should not touch the funnel above the Reference Line (see *Outline Drawing*), but can follow the funnel contour departing gradually from it.

Tube Handling. A caution notice incorporating the information shown below is included in each 14EP4 carton. It is recommended that a similar

CAUTION--HANDLE WITH CARE

Breakage of this tube, which contains a high vacuum, may result in injury from flying glass. Do not strike or scratch the tube. Never subject it to more than moderate pressure when installing in or removing from equipment.

notice be prominently displayed on equipment using the 14EP4 and be included in the equipment service bulletin.

Shatter-Proof Cover Over Tube Face. It is recommended that receivers be designed with a shatter-proof, clear glass or plastic cover over the face of the 14EP4 to provide protection against flying glass in case of tube implosion caused by some abnormal condition.

The *conductive coating* on the exterior of the bulb *must be grounded.* Connection to the coating may be made by using a soft brush contact attached to the deflecting yoke or by means of a suitable strap around the tube at the face end of the coating. The latter arrangement minimizes radiation caused by the horizontal-scanning pulses. A contact area of at least 1/4 square inch should be used in making connection to the external coating. This coating must not be scratched and must never be washed with liquids likely to soften or dissolve lacquers.

The external bulb coating is designed to be used as one plate of a filter capacitor for the high-voltage power supply. The other plate of the capacitor is provided by the internal conductive coating on the bulb wall.

The *base pins* of the 14EP4 fit either the duodecal 12-contact socket or the duodecal 5-contact segment socket. The socket should be made of high-grade, low-leakage, insulating material. The socket should not be rigidly mounted; it should have flexible leads and be allowed to move freely.

Support for the tube, which may be operated in any position, should be provided by a cushioned arrangement near the screen end of the tube, and by the deflecting-yoke mounting on the neck.

The deflecting-yoke mounting, sometimes called the mounting hood, should provide adjustment for alignment of the yoke on the neck and should also provide sufficient pressure to hold the yoke firmly against the funnel. Some good insulating material, such as Neoprene, is required between the hood and the funnel not only to provide a cushion between them but also to prevent arcing from the anode terminal to the hood. The hood should be designed so that it can be placed as close as possible to the Reference Line (see *Outline Drawing*) without interfering with the yoke in order to reduce the amount of insulation required between hood and funnel. Furthermore, the hood should not exert undue pressure on the deflecting yoke.

The yoke should be held firmly against the funnel (see proper location under *Deflecting Yoke*), but any thrust should be absorbed by the insulating cushion. The hood, which also usually serves as the mounting for the focusing coil, should be specially braced to prevent lateral and longitudinal motion caused by buckling of the chassis which may occur during transportation of the receiver. A simple brace from the edge of the chassis usually provides the extra stiffness required; or a small foot placed directly under the yoke will be sufficient. Unless the precaution against thrust on the yoke is observed, the tube or yoke may be damaged during transportation of the receiver.

The *anode connection* is made by a flexible lead to the recessed small cavity cap on the side of the bulb.

The *heater* is designed to be operated at 6.3 volts. The transformer winding supplying the heater power should be designed to operate the heater at the rated voltage under average line-voltage conditions. If the circuit design is such as to cause a high voltage between the heater winding and ground, the heater transformer should be adequately insulated to withstand the high voltage.

Although maximum values of peak heater-cathode voltage are specified in the tabulated data, it is recommended that the mid-tap or one side of the heater winding be connected directly to the cathode to minimize the possibility of damage to the tube produced by arcing between heater and cathode when a possible momentary internal arc causes the voltage between heater and cathode to exceed the maximum heater-cathode ratings. When, in some circuit designs, the heater is not connected directly to the cathode, precautions must be taken to hold the peak heater-cathode voltage to the maximum values shown in the tabulated data.

The *cathode* is connected to base pin No. 11 to which the grid-No. 1, grid-No. 2, and anode circuit returns should be made.

Grid No. 2 is incorporated in the design of the 14EP4 to prevent interaction between the fields produced by grid No. 1 and anode. Grid No. 2 may also be used to compensate for the normal variation to be expected in the grid-No. 1 voltage for cutoff in individual tubes. By adjusting the voltage applied to grid No. 2, with due consideration to its maximum rated value, it is possible to fix the grid-No. 1 bias at a desired value, and obtain approximately the same maximum anode current for individual tubes having different cutoff voltages. Adjusting grid-No. 1

voltage for beam cutoff in this way not only makes grid-No.1 drive more uniform, but also reduces variations in the anode current. Since grid No.2 draws at most only negligible leakage current, its voltage may be obtained from any convenient source.

The *fluorescent screen*, utilizing phosphor No.4--Sulfide Type, is highly efficient. Its white fluorescence has a color temperature of approximately 7000°K. The spectral distribution of the energy emitted by the P4 phosphor is shown in Fig.1. The persistence of the phosphorescence is such that its brightness does not exceed 7 per cent of the peak value in 33 milliseconds after excitation is removed.

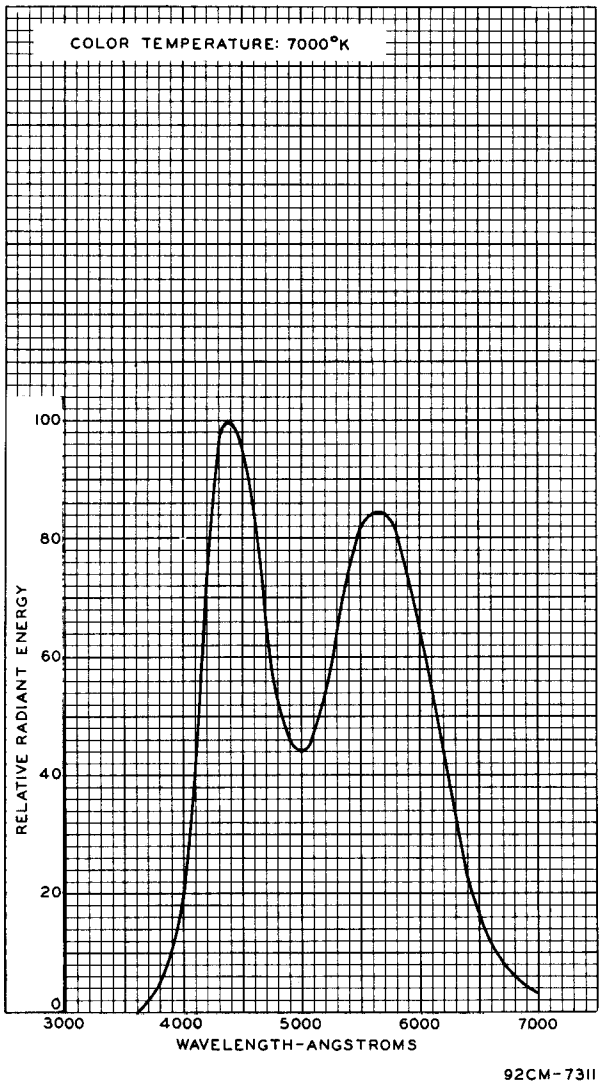

Fig.1 - Spectral-Energy Emission Characteristic of Phosphor No.4--Sulfide Type.

The *dc voltages* for the 14EP4 may be obtained from low-energy power supplies. The supply for the anode may be of the pulse-operated or radio-frequency type; the voltage for grid No.2 may be obtained from any convenient source, such as the amplifier voltage supply; and a variable dc voltage for grid No.1 may be obtained from a potentiometer in the voltage divider across the amplifier voltage supply. It may be more convenient in some cases to operate grid No.1 at ground potential in a signal circuit and to bias the cathode positive with respect to ground by means of the amplifier voltage supply.

A small amount of voltage regulation in the anode supply acts to maintain sharp focus as the average beam current is changed. At high beam current, a relatively higher focusing-field strength is required to maintain sharp focus, but provision for such an increase is usually impractical in commercial receivers. Therefore, the same effect as would be produced by increased focusing-field strength is achieved automatically by reduction of anode voltage due to regulation. A regulation corresponding to that provided by an equivalent internal resistance of the rectifier system of 1 megohm gives good compensation. Such compensation is effective, in general, only for slow changes in current as determined by the time constant of the filter circuit.

It is recommended that the inherent regulation of the limited-energy power supply limit the continuous short-circuit current to 5 milliamperes. If the regulation of the supply permits the instantaneous short-circuit current to exceed 1 ampere, or if the power-supply output capacitor is capable of storing more than 250 microcoulombs, provision must be made to protect the tube electrodes connected to that supply. For this purpose, the use of resistors connected between the electrodes and the output capacitor of the power supply as specified in the tabulated data is recommended. The 14EP4 is designed so that an occasional internal arc will not damage the tube if the current is limited as recommended.

The high voltages at which the 14EP4 is operated may be very dangerous. Great care should be taken in the design of apparatus to prevent the operator from coming in contact with the high voltages. Precautions include the enclosing of high-potential terminals and the use of interlocking switches to break the primary circuit of the power supply when access to the equipment is required.

In the case of cathode-ray tubes, it should always be remembered that high voltages may appear at normally low-potential points in the circuit because of capacitor breakdown or incorrect circuit connections. Therefore, before any part of the circuit is touched, the power-supply switch should be turned off and both terminals of any capacitors should be grounded.

A *deflecting yoke*, consisting of four electromagnetic coils, is required for deflecting the electron beam. These coils are used in pairs; the coils of each pair, located diametrically

opposite each other, produce a field of essentially uniform flux density. The axes of the two fields ordinarily intersect at right angles to each other and to the tube axis. The deflection of the electron beam is at right angles to the magnetic field of each pair of coils. By the use of two pairs of coils at right angles, the beam may be deflected to any part of the screen.

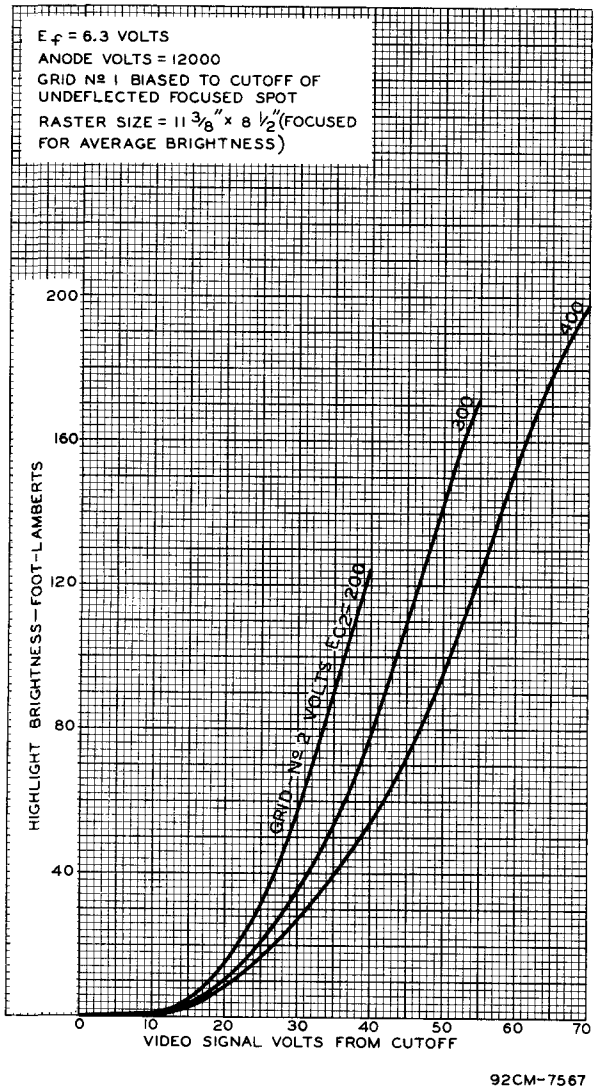

Fig. 2 - Average Grid-Drive Characteristics of Type 14EP4.

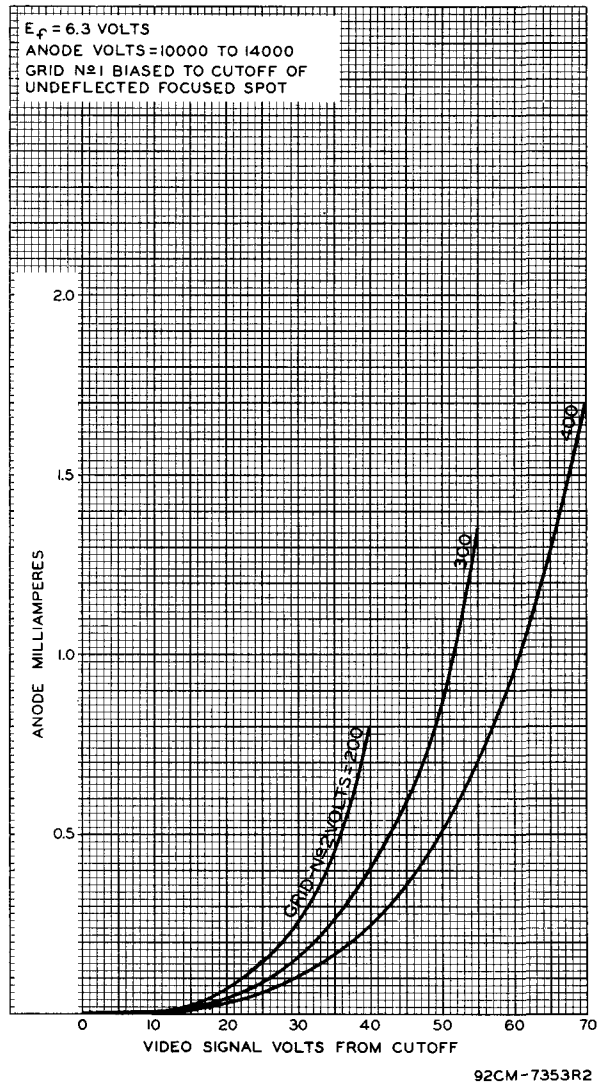

Fig. 3 - Average Grid-Drive Characteristics of Type 14EP4.

Because of the short length of the 14EP4, the electron beam must be deflected through a wide angle. To scan the screen area, it is necessary to deflect the beam through a diagonal deflection angle of 70°, a horizontal deflection angle of 65°, and a vertical deflection angle of 50°.

The deflecting yoke should have an effective length of not more than 1-11/16" and be designed so that the effective center of deflection of the beam is about 1.15 inches from the Reference line (see *Outline Drawing*). This requirement is necessary to prevent the beam from striking the neck when deflection is sufficient to reach the edge of the screen.

The deflecting yoke should have an inside contour which conforms in general to the dimensions and shape shown in Fig.4. It is to be noted that the inner surface of the end of the yoke adjacent to the funnel should not come closer to the funnel than indicated by the 35° line in Fig.4 if adequate insulation is to be maintained across the funnel between the point of yoke contact and the anode terminal.

With a yoke designed as indicated above, it is possible to take full advantage of features

included in the 14EP4 to provide good uniformity of focus over the entire picture area. The good uniformity is obtained partly by an electron gun which centers the beam in the neck at the entrance to the deflecting fields when the ion-trap magnet is adjusted for maximum brightness, and partly by the shape of the neck-funnel section which permits good centering of the deflecting fields on the neck. The quality of edge focus will depend to a considerable extent on good deflecting-yoke design. The neck-funnel section centers the one end of the yoke when the yoke is pushed firmly against the funnel, and the other end can be centered by inserting a small cylindrical wedge of insulating material between the yoke and the neck.

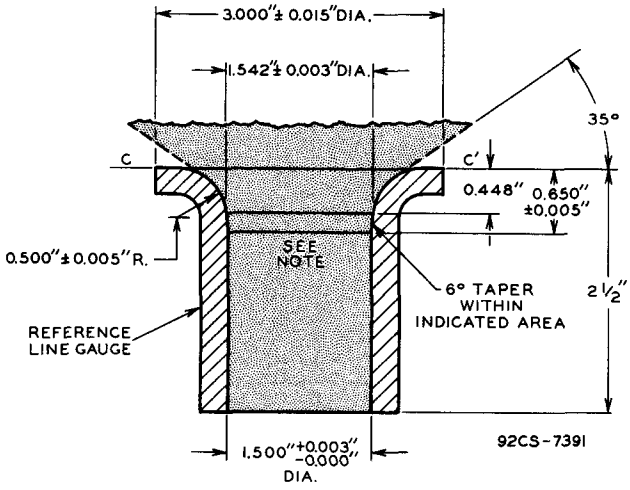

NOTE: INNER SURFACE OF YOKE MUST NOT EXTEND INTO SHADED REGION

Fig. 4 - Reference-Line Gauge (JETEC No. 110) with Supplementary Information on Recommended Inside Contour of Yoke to Provide Proper Location of Yoke on Neck-Funnel Section.

A *focusing field*, supplied by an electromagnetic coil, permanent magnet, or a combination of the two, is required to concentrate the electron beam into a focused spot at the screen. The field should have excellent radial symmetry. When a coil is used, it should be supplied with direct current from a well-filtered source. The field strength to produce a focused spot is indicated in the tabulated data. For other anode voltages than that shown, the coil current will be approximately proportional to the square root of the anode voltage. Regardless of the kind of focusing device used, provision should be made for adjusting the field strength to cover the anode-voltage operating range and the normal variation between individual tubes.

The focusing field should be spaced at least 1/2 inch from the end of the deflecting-coil windings to reduce interaction between the focusing and deflecting fields. If the focusing field is placed too close to the deflecting fields, interaction between them may reduce deflection sensitivity and corner resolution, as well as cause objectionable rotation of the fluorescent pattern as the focus is varied. On the other hand, if the focusing field is too close to the electron gun, resolution will be reduced and pattern distortion may occur as a result of interaction with the ion-trap-magnet field.

As the air gap of the focusing device is moved away from the deflecting yoke, the corner resolution will be improved at the expense of slight loss in center resolution. The strength of the focusing field required increases appreciably as the distance between the deflecting-yoke windings and the air gap of the focusing device is increased.

The *ion-trap magnet*, required to recenter the electron beam in the gun structure, should be of the single-field type. It may be either a permanent magnet or an electromagnet, but should be capable of providing a field strength at its center of 45 gausses for operation in the range from 12000 to 14000 volts. If an electromagnet is used, it should be operated with direct current from a well-filtered source. Direction of the field of the ion-trap magnet should be such that the north pole is adjacent to vacant pin position No.8 and the south pole to pin No.2.

To operate properly with the electron gun in the 14EP4, the ion-trap magnet should be positioned in the region of grid No.2 (see Fig.5) with choice of position preferably toward the base rather than toward the funnel. This position should result in a properly centered pattern having full brightness and a minimum of shadowing at the edges. If full brightness is accompanied by an unsymmetrical raster shape and poor focus, it is an indication that the ion-trap magnet has incorrect rotational positioning and that the focusing field has been displaced to counteract incorrect positioning of the ion-trap magnet.

Centering of the pattern is preferably accomplished by passing direct current of the required value through each pair of deflecting coils. When this method of centering is not used, the yoke circuits should filter out the dc component of the deflecting currents. Then, the small amount of centering needed to position the pattern in the mask and to correct for small alignment errors can be provided by displacing the focusing field from its optimum position. Both decentering and tilting of the focusing field change the raster position but the former is generally preferred because it produces less distortion.

Adjustment of spot size and intensity is made by varying the focus and anode current. The current to the anode may be increased by decreasing the bias applied to grid No.1. Also, an increase in the voltage applied to grid No.2 increases the anode current as well as the sharpness of focus and, therefore, the spot intensity.

In applications where high definition is the principal requirement, the 14EP4 may be operated with the maximum anode and grid-No.2 voltages, and the lowest value of anode current consistent with the desired brightness. Higher anode voltages are not always desirable because they reduce deflection sensitivity. Higher grid-No.2 voltages require higher values of grid-No.1 voltage for beam cutoff and higher grid-No.1 drive to provide a given brightness as shown by the curves in Fig.2.

A *high-intensity spot* will burn the fluorescent screen if the spot is allowed to remain stationary. To prevent this possibility, the beam should always be kept in motion over a reasonably large area, or the beam current should be reduced.

The *maximum value of peak anode current* and the *maximum value of the average anode current* that will be required from the high-voltage power supply for the 14EP4 are 1 milliampere and 0.250 milliampere, respectively.

Grid drive, or the extent to which grid No.1 is driven in the positive direction from cutoff, should be limited on the maximum excursions above zero grid bias to + 2 volts. The positive grid-No.1 excursions may be limited to the rated maximum value by utilizing a diode limiter, a series grid-No.1 resistor, or some other suitable arrangement. The curves in Fig.3 show anode current versus video signal voltage from cutoff for the 14EP4 with an anode voltage of 10000 to 14000 volts and grid-No.2 voltages of 200, 300, and 400 volts.

The *characteristics curves* in Figs.2 and 3 are for the condition with grid No.1 biased to give visual extinction of the undeflected, focused spot. In viewing television pictures, it will be found that the actual cutoff voltage corresponding to black in the picture is approximately 5 volts less negative than shown on the curves; similarly, the grid-No.1 drive to obtain a given anode current or light output is also about 5 volts less negative.

The *recommended sequence of adjustments* in lining up the 14EP4 with its associated components is as follows:

1. Place the deflecting yoke on the tube neck and press it firmly against the funnel. Then insert a cylindrical liner with a tapered end between the base end of the yoke windings and the tube neck. Space the focusing device about 1/2 inch back of the deflecting-coil windings and position it coaxially with the tube neck. Next, position the ion-trap magnet on the neck so that its poles are roughly aligned with grid No.2 (see Fig.5).

2. Apply operating voltages with scanning to the tube and adjust the grid-No.1 voltage to a value about midway between zero and cutoff.

3. Then, promptly rotate the ion-trap magnet and move it slightly forward and backward until the maximum raster brightness is obtained. Readjust grid-No.1 bias to give average picture brightness. Move the ion-trap magnet backward and forward noting both positions at which brightness is diminished, and then locate it halfway between these positions.

It is important that this adjustment be made with low anode current and without delay after the operating voltages are applied. Operation of the tube with the ion-trap magnet improperly positioned may damage the tube. If the anode voltage supply is not of the limited-energy type, damage may occur very quickly.

4. Focus the pattern by adjusting the focusing-field strength. Then, rotate the deflecting yoke to align the raster with the tube mask and adjust the raster size to fit the mask. Center the raster by adjusting the dc current through the deflecting yoke. If such adjustment is not provided, centering may be obtained by moving the focusing field slightly off center or by tilting the focusing field. The latter method generally produces the most distortion. If a corner of the raster is shadowed, it may be due to excess dc current in the yoke or to incorrect alignment of the components on the tube neck. It may be possible to obtain minor correction by readjustment of the ion-trap magnet. If not, rotate both the tube and the ion-trap magnet 180° and repeat Steps 3 and 4.

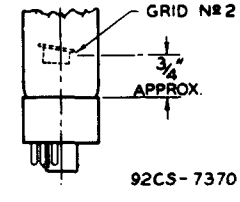

Fig.5 - Location of Grid No.2 in Tube Neck.

5. Vary grid-No.1 drive and grid-No.1 bias through the expected operating range to observe whether shadowing occurs. If a shadow appears near the edges of the raster, first check to be sure that the deflecting yoke bears firmly against the funnel; and then eliminate any remaining shadow as explained in Step 4.

Devices and arrangements shown or described herein may use patents of RCA or others. Information contained herein is furnished without responsibility by RCA for its use and without prejudice to RCA's patent rights.

DIMENSIONAL OUTLINE

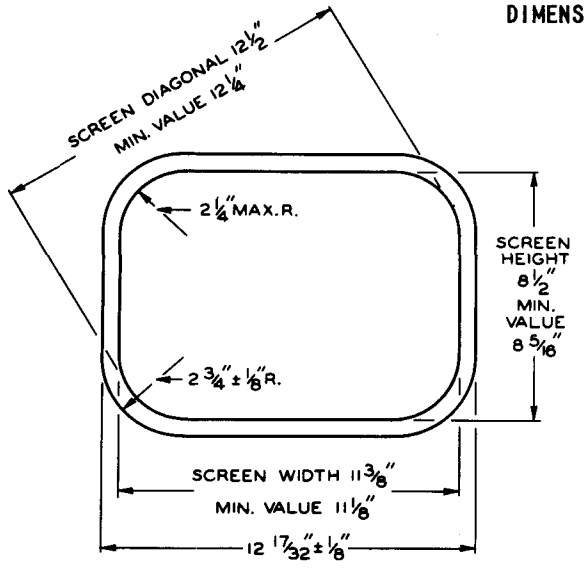

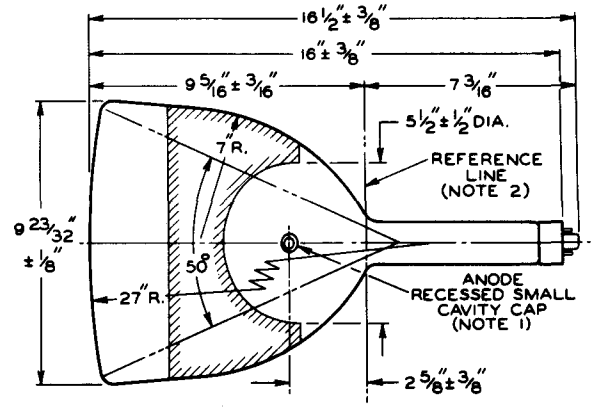

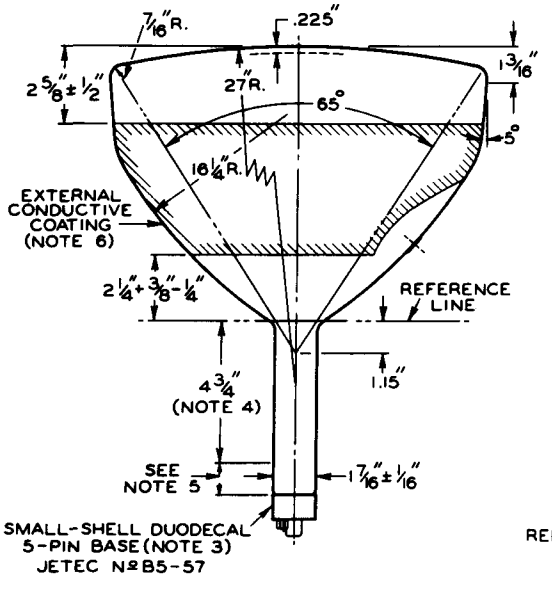

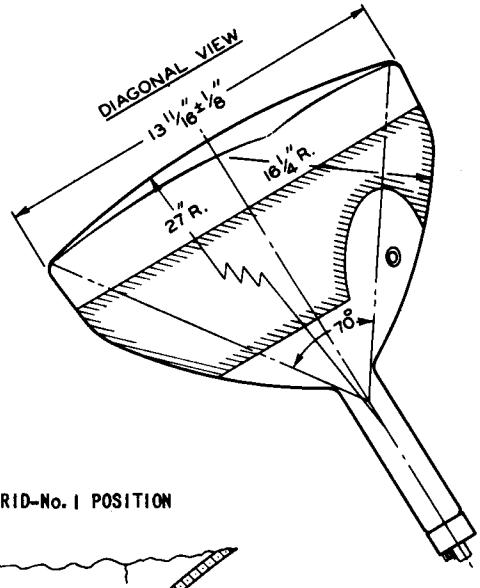

92CL-7554

DETAIL OF GRID-No. 1 POSITION

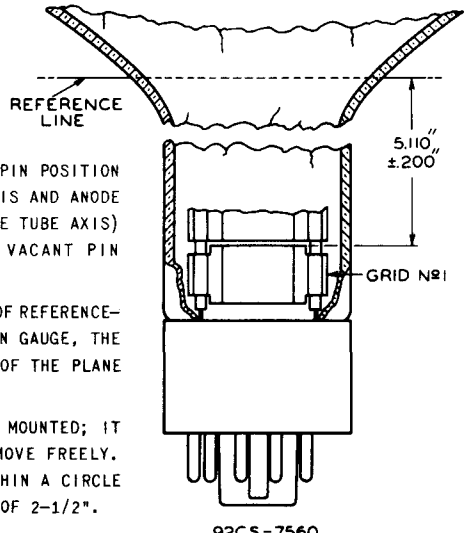

92CS-7560

SOCKET CONNECTIONS
Bottom View

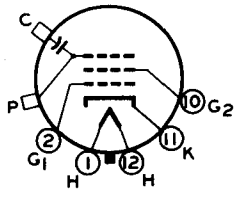

PIN 1: HEATER
PIN 2: GRID No. 1
PIN 10: GRID No. 2
PIN 11: CATHODE
PIN 12: HEATER
CAP: ANODE
C: EXTERNAL CONDUCTIVE COATING

NOTE 1: THE PLANE THROUGH THE TUBE AXIS AND VACANT PIN POSITION No. 6 MAY VARY FROM THE PLANE THROUGH THE TUBE AXIS AND ANODE TERMINAL BY ANGULAR TOLERANCE (MEASURED ABOUT THE TUBE AXIS) OF 30°. ANODE TERMINAL IS ON SAME SIDE AS VACANT PIN POSITION No. 6.

NOTE 2: WITH TUBE NECK INSERTED THROUGH FLARED END OF REFERENCE-LINE GAUGE (JETEC No. 110) AND WITH TUBE SEATED IN GAUGE, THE REFERENCE LINE IS DETERMINED BY THE INTERSECTION OF THE PLANE CC' OF THE GAUGE WITH THE GLASS FUNNEL.

NOTE 3: SOCKET FOR THIS BASE SHOULD NOT BE RIGIDLY MOUNTED; IT SHOULD HAVE FLEXIBLE LEADS AND BE ALLOWED TO MOVE FREELY. BOTTOM CIRCUMFERENCE OF BASE SHELL WILL FALL WITHIN A CIRCLE CONCENTRIC WITH BULB AXIS AND HAVING A DIAMETER OF 2-1/2".

NOTE 4: LOCATION OF DEFLECTING YOKE AND FOCUSING DEVICE MUST BE WITHIN THIS SPACE.

NOTE 5: KEEP THIS SPACE CLEAR FOR SINGLE-FIELD, ION-TRAP MAGNET.

NOTE 6: EXTERNAL CONDUCTIVE COATING MUST BE GROUNDED.