14AJP4

CATHODE-RAY TUBE

14-INCH RECTANGULAR, GLASS	12-3/8 BY 9-7/8 INCH PICTURE SIZE
FOCUS - ELECTROSTATIC	FACEPLATE - SPHERICAL, GRAY
DEFLECTION - MAGNETIC	ION-TRAP GUN
110-DEGREE DEFLECTION ANGLE	EXTERNAL CONDUCTIVE COATING

ALUMINIZED SCREEN

DESCRIPTION AND RATING

The 14AJP4 is a fourteen-inch electrostatic-focus and magnetic-deflection glass picture tube. Outstanding features include a short overall length and a small neck diameter. The fluorescent screen is aluminized to increase light output and reduce undesirable screen charging. An external conductive coating is provided to serve as a filter capacitor.

GENERAL

ELECTRICAL

Heater Voltage	6.3	Volts
Heater Current	0.6 ± 10%	Amperes
Heater Warm-up Time *	11	Seconds

Focusing Method - Electrostatic
Deflecting Method - Magnetic

Deflection Angle, approximate		
Diagonal	110	Degrees
Horizontal	105	Degrees
Vertical	86	Degrees
Direct Interelectrode Capacitances, approximate		
Cathode to All Other Electrodes	5	μμf
Grid-No. 1 to All Other Electrodes	6	μμf
External Conductive Coating to Anode		
Maximum	850	μμf
Minimum	500	μμf

OPTICAL

Phosphor Number - P4, Sulfide Type
Fluorescent Color - White
Phosphorescent Color - White
Persistence - Short

Faceplate - Gray

Light Transmission at Center, approximate	86	Percent

GENERAL ELECTRIC COMPANY

from JETEC release #1830, Jan. 28, 1957

MECHANICAL

Overall Length	11-7/16 ± 3/8	Inches
Greatest Bulb Dimensions		
Diagonal	13-7/8 ± 1/8	Inches
Width	13-3/16 ± 1/8	Inches
Height	10-7/8 ± 1/8	Inches
Minimum Useful Screen Dimensions		
Diagonal	13-1/8	Inches
Width	12-3/8	Inches
Height	9-7/8	Inches
Area	108	Square Inches
Neck Length	5-1/2 ± 3/16	Inches

Bulb Contact - Recessed Small-cavity Cap, JETEC No. J1-21
Base - Small-button Eightar, 7-Pin, JETEC No. B7-183
Basing, 8HR
Bulb Contact Alignment
Anode Contact Aligns with Pin-No. 4 ± 30 Degrees
Mounting Position - Any
Net Weight, approximate . . . . . 7-1/2 Pounds

MAXIMUM RATINGS

DESIGN-CENTER VALUES ≠

Anode Voltage #	11,000	Max Volts DC
Focusing-Electrode Voltage	-500 to +1000	Max Volts DC
Grid-No. 2 Voltage	500	Max Volts DC
Grid-No. 1 Voltage		
Negative-Bias Value	140	Max Volts DC
Positive-Bias Value	0	Max Volts DC
Positive-Peak Value	2	Max Volts
Negative-Peak Value	200	Max Volts
Peak Heater-Cathode Voltage		
Heater Negative with Respect to Cathode		
During Warm-up Period not to Exceed 15 Seconds	410	Max Volts
After Equipment Warm-up Period	180	Max Volts
Heater Positive with Respect to Cathode	180	Max Volts

TYPICAL OPERATING CONDITIONS

Anode Voltage **	9,000	Volts DC
Focusing-Electrode Voltage for Focus	-100 to +400	Volts DC
Focusing-Electrode Current	-15 to +25	Microamperes DC
Grid-No. 2 Voltage	250	Volts DC
Grid-No. 1 Voltage ≠	-24 to -64	Volts DC
Ion-Trap Field Intensity ##, minimum	29	Gausses

MAXIMUM CIRCUIT VALUES

Grid-No. 1 Circuit Resistance	1.5	Max Megohms

* Heater warm-up time is the time required for the voltage across the heater terminals to increase to 5.0 volts in the JETEC test circuit, with E = 25 volts and series R = 42 ohms.

† The maximum ratings provide a ten-percent safety factor in accordance with the standard design-center system of rating cathode-ray tubes. The tube will withstand the combined effects of variations in line voltage and components provided the maximum design-center values are not exceeded by more than ten percent.

\# Anode, grid-No. 3, and grid-No. 5 which are connected together within the tube are referred to herein as anode.

** Brightness and focus quality decrease with decreasing anode voltage. In general, the anode voltage should not be less than 8,000 volts.

‡ For visual extinction of focused raster.

\#\# For a Heppner PM ion-trap magnet or equivalent located in optimum position and rotated to give maximum brightness.

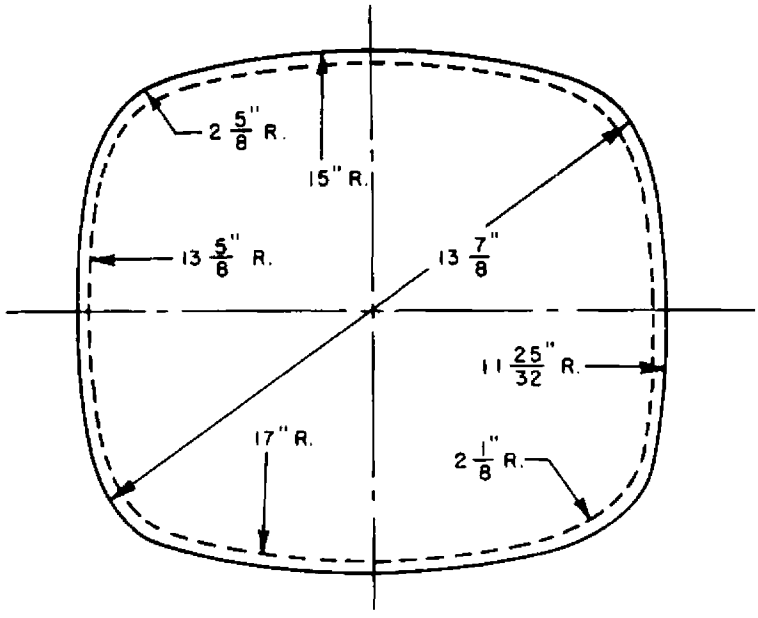

SCREEN DIMENSIONS:

DIAGONAL	13	1/8"
WIDTH	12	3/8"
HEIGHT	9	7/8"
AREA	108	SQ. IN.

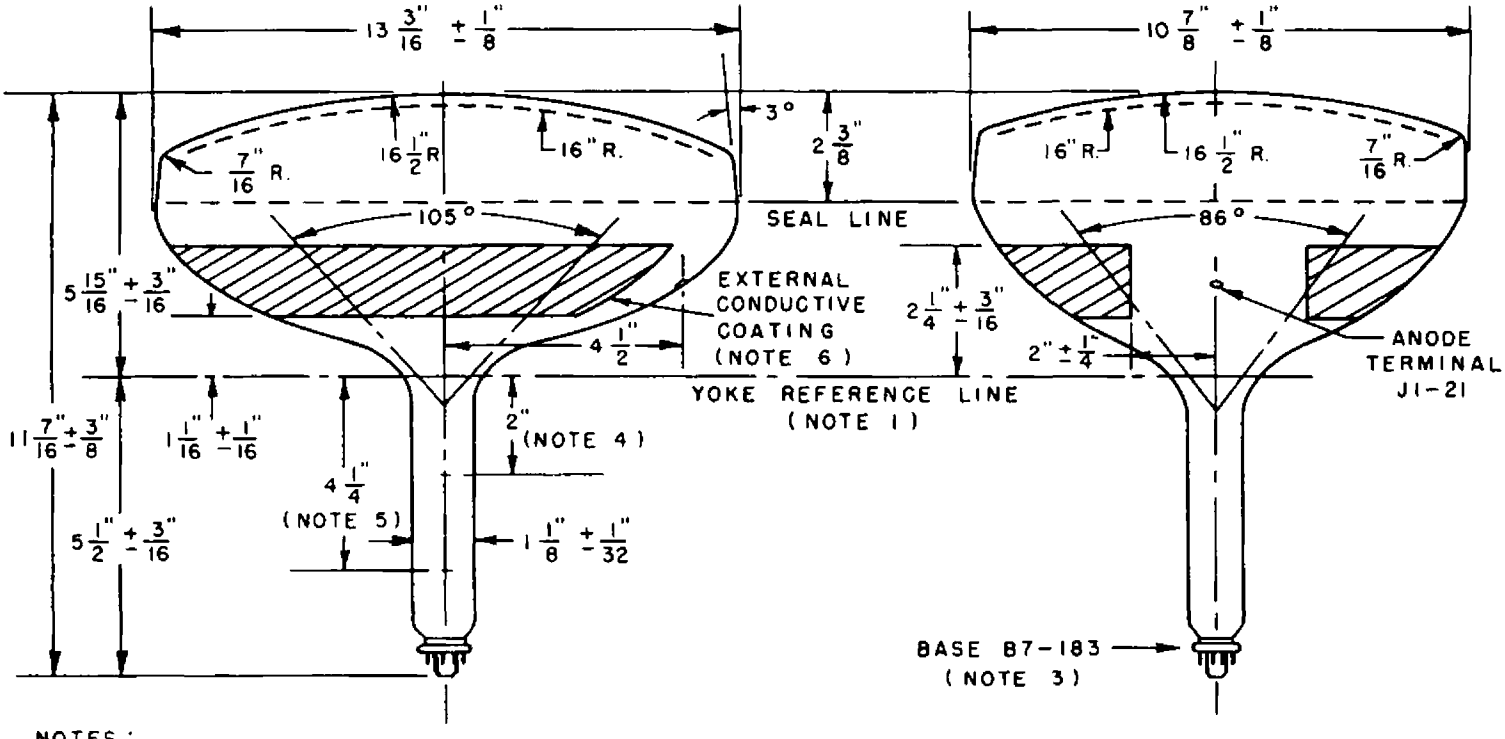

NOTES:

1. REFERENCE LINE IS DETERMINED BY PLANE C-C' WHEN GAGE (RETMA) NO. 126 IS SEATED AGAINST THE BULB.
2. DEFLECTION ANGLE ON DIAGONAL IS 110°.
3. ANODE TERMINAL ALIGN WITH PIN NO. 4 ± 30 DEGREES.
4. RECOMMENDED POSITION OF CENTERING MAGNET, IF USED.
5. APPROXIMATE POSITION OF ION-TRAP MAGNET.
6. EXTERNAL CONDUCTIVE COATING.

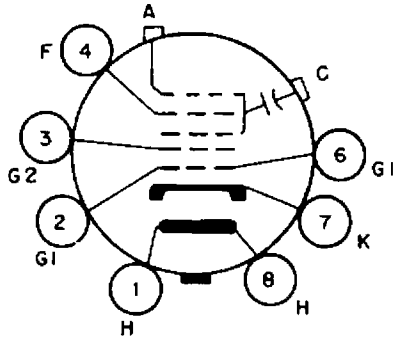

BASING DIAGRAM
8HR