TWIN TRIODE TYPES 6SN7-GTA, 6SN7-GTB AND 12SN7-GTA

The 6SN7-GTA, 6SN7-GTB and 12SN7-GTA are medium-mu twin triodes designed for use as combined vertical oscillators and vertical deflection amplifiers in television receivers. These types may also be used in general purpose applications such as resistance-coupled amplifiers, phase inverters and multivibrators.

The 6SN7-GTB has been designed for use in receivers which employ series-connected heaters, especially in television receivers where the picture-tube heater is in series with other heaters. When it is employed in this type of circuit with other tubes having a heater current rating of 600 ma., heater voltage surges across individual tubes are minimized inasmuch as the heater warm-up characteristic is controlled.

ELECTRICAL:

Cathodes	Coated Unipotential		
Heater:	6SN7-GTA 6SN7-GTB	12SN7-GTA	
Voltage (ac or dc)	6.3	12.6	Volts
Current	0.6	0.3	Ma.
Warm-up Time (Approx.)▲	11	--	Seconds
Direct Interelectrode Capacitances (Unshielded):			
	Unit 1	Unit 2	
Grid to Plate	4.0	3.8	μμf
Input	2.2	2.6	μμf
Output	0.7	0.7	μμf

MECHANICAL:

Bulb	T-9
Base	Intermediate Shell Octal 8-Pin
Basing	8BD
Mounting Position	Any

MAXIMUM RATINGS:
Design Center Values
Each Unit, Except as Noted

As	Class A_1 Amplifier	Vertical # Deflection Amplifier		
Plate Voltage	450	450	max.	Volts
Peak Positive Plate Voltage (Abs. Max.)	--	1500		Volts
Peak Negative Grid Voltage	--	250	max.	Volts
Plate Dissipation:				
Each Plate	5.0	5.0*	max.	Watts
Both Plates	7.5	7.5*	max.	Watts
Cathode Current	20	20	max.	Ma.
Peak Cathode Current	--	70	max.	Ma.
Heater-Cathode Voltage				
Heater Positive with Respect to Cathode				
D-C Component	100	100	max.	Volts
Total D-C and Peak	200	200	max.	Volts
Heater Negative with Respect to Cathode				
Total D-C and Peak	200	200	max.	Volts
Grid Circuit Resistance:				
Fixed Bias	1.0	--	max.	Megohm
Cathode Bias	1.0	2.2	max.	Megohms

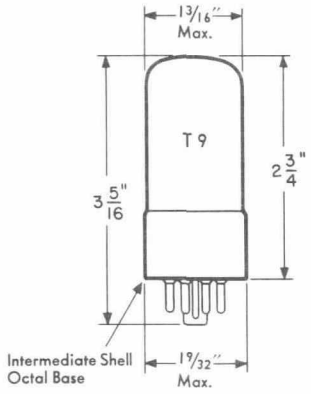

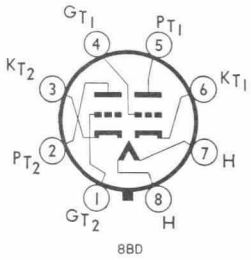

MAXIMUM RATINGS:
Design Center Values (Each Unit, Except as Noted)

As	Vertical # Deflection Oscillator	Horizontal # Deflection Oscillator	
Plate Voltage	450	450 max.	Volts
Peak Negative Grid Voltage	400	600 max.	Volts
Plate Dissipation:			
Each Plate	5.0	5.0 max.	Watts
Both Plates	7.5	7.5 max.	Watts
Cathode Current	20	20 max.	Ma.
Peak Cathode Current	70	300 max.	Ma.
Heater-Cathode Voltage			
Heater Positive with Respect to Cathode			
D-C Component	100	100 max.	Volts
Total D-C and Peak	200	200 max.	Volts
Heater Negative with Respect to Cathode			
Total D-C and Peak	200	200 max.	Volts
Grid Circuit Resistance			
Fixed Bias	2.2	2.2 max.	Megohms
Cathode Bias	2.2	2.2 max.	Megohms

AMPLIFIER – CLASS A_1
Each Unit

CHARACTERISTICS AND TYPICAL OPERATION:

Plate Voltage	90	250	250	Volts
Grid Voltage	0	–12.5	–8	Volts
Plate Current	10	1.3	9.0	Ma.
Plate Resistance (Approx.)	6700	- -	7700	Ohms
Transconductance	3000	- -	2600	μmhos
Amplification Factor	20	- -	20	
Grid Voltage for $I_b = 10\ \mu a.$ (Approx.)	–7.0	- -	–18	Volts

For operation in a 525-line, 30 frame system as described in "Standards of Good Engineering Practice for Television Broadcasting Stations; Federal Communications Commission". The duty cycle of the voltage pulse must not exceed 15% of one scanning cycle.

* Stages operating with grid-leak bias require an adequate cathode-bias resistor or other suitable means to protect the tube in the absence of excitation.

▲ Heater Warm-up Time is defined as the time required for the voltage across the heater to reach 80% of its rated value after applying four times rated heater voltage to a circuit consisting of the tube heater in series with a resistance equal to three times rated heater voltage divided by rated heater current.

AVERAGE PLATE CHARACTERISTICS

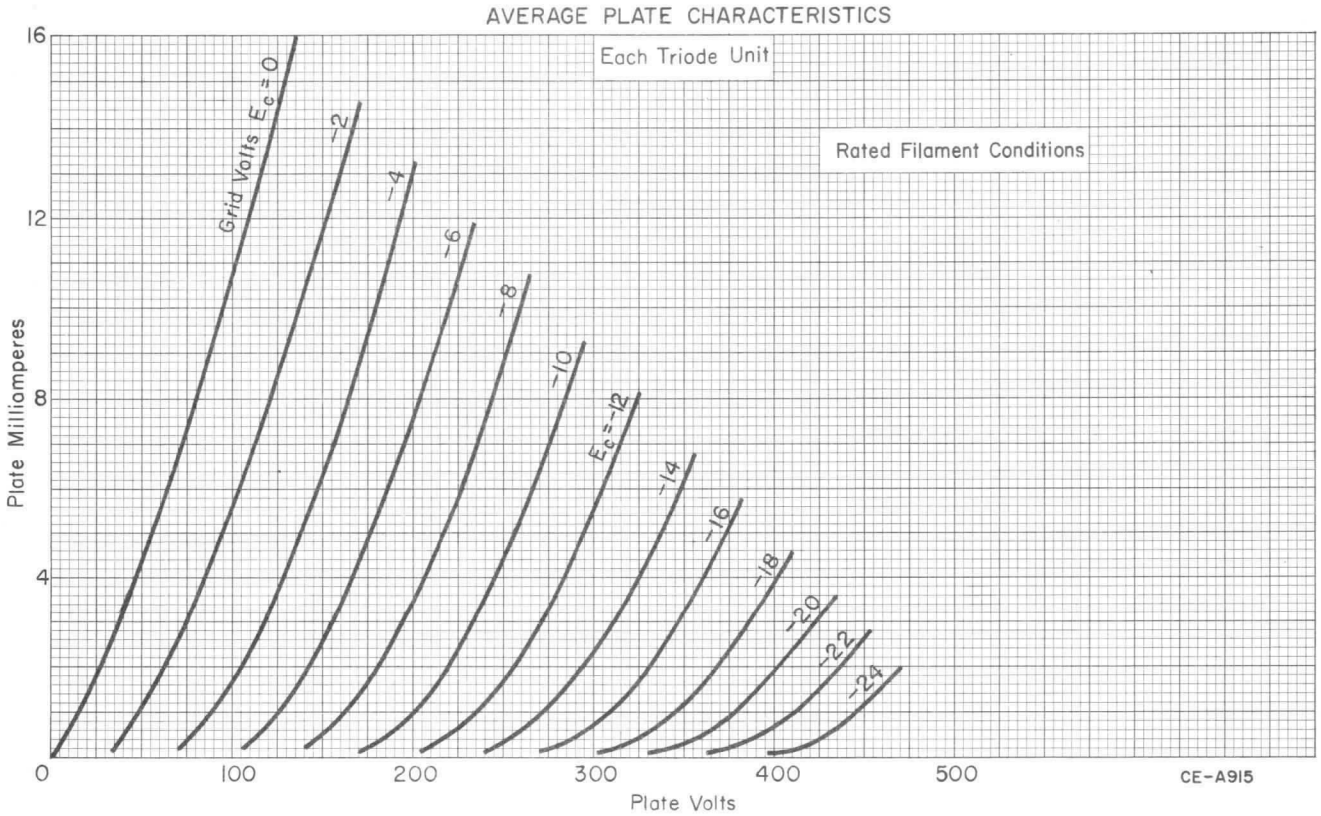

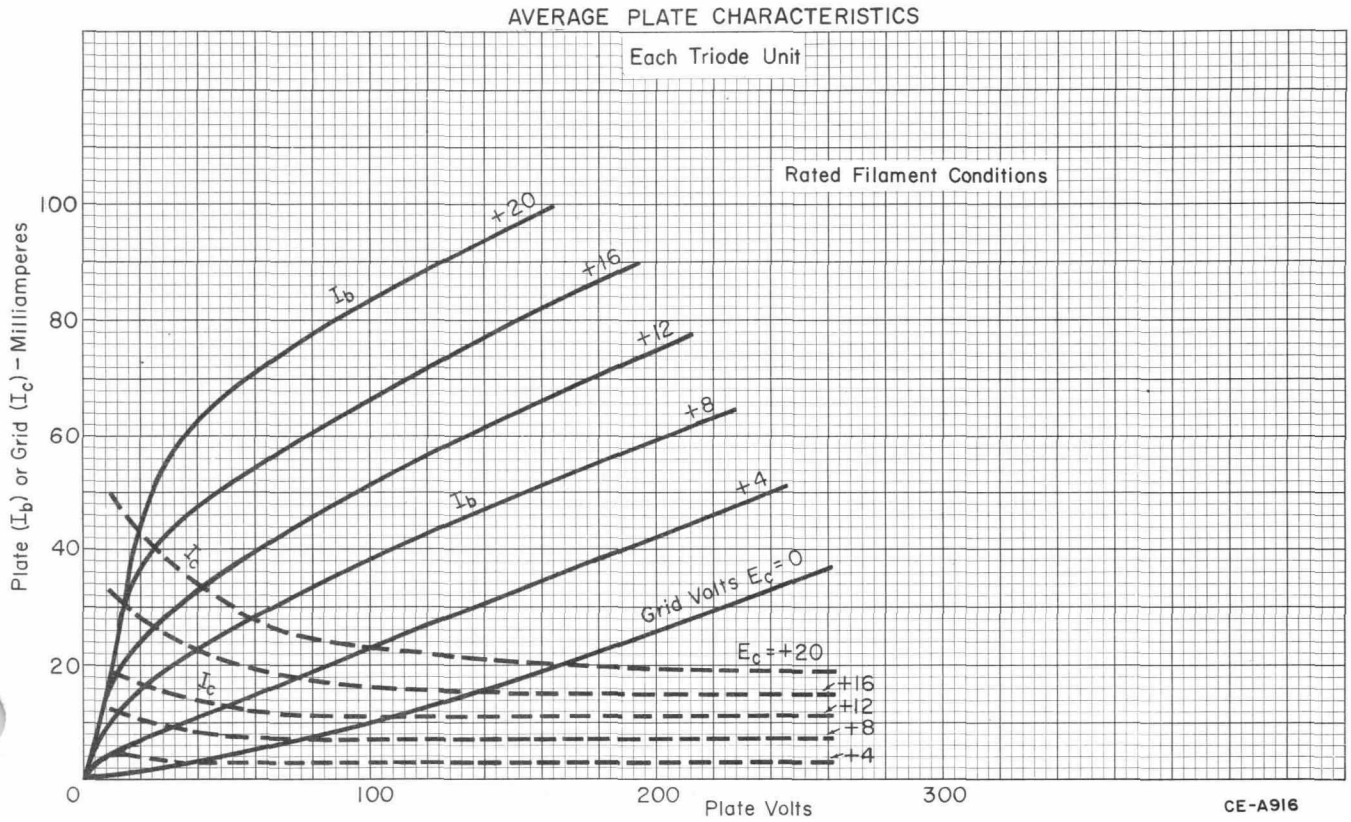
AVERAGE PLATE CHARACTERISTICS
Each Triode Unit
Rated Filament Conditions
Plate (I_b) or Grid (I_c) – Milliamperes
100
80
60
40
20
0
100
200
300
Plate Volts
+20
+16
+12
+8
+4
I_b
I_c
Grid Volts E_c=0
E_c=+20
+16
+12
+8
+4
CE-A916

AVERAGE CHARACTERISTICS

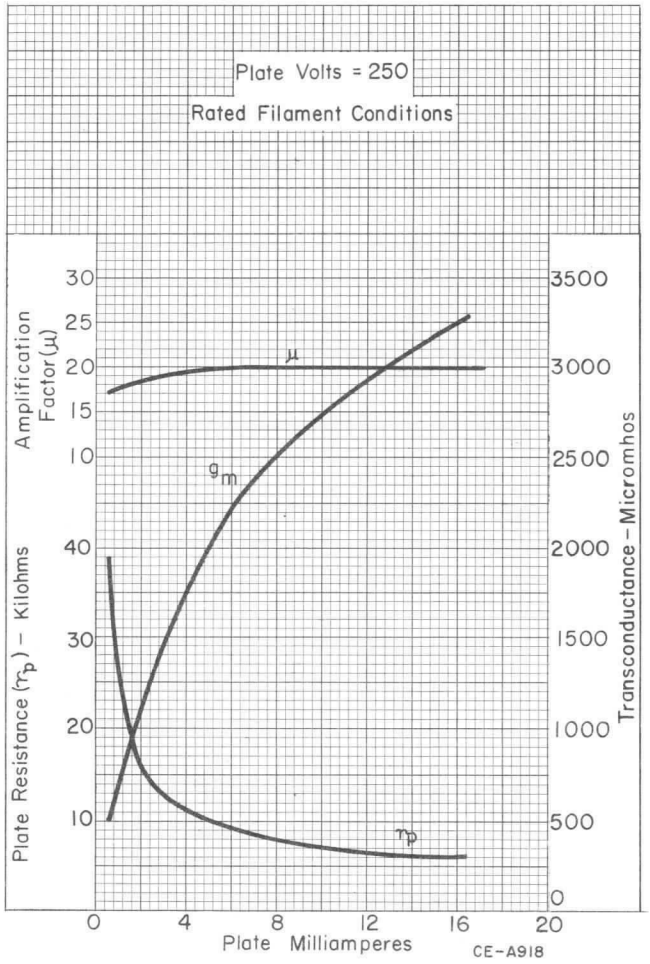

AVERAGE CHARACTERISTICS

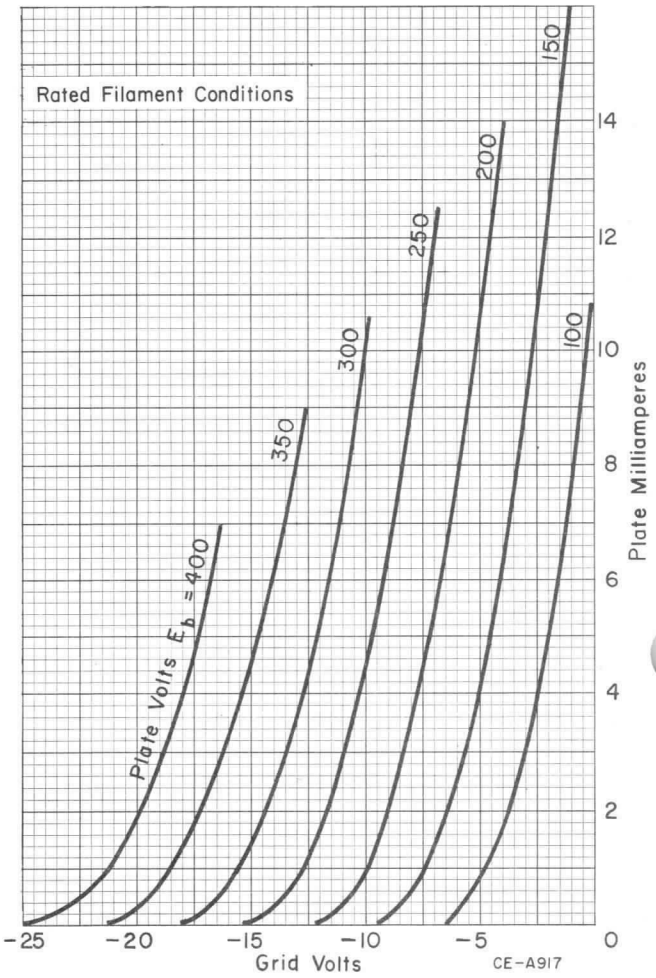

The information contained herein is supplied without assuming responsibility for infringement of patents or other rights of third parties which may result from its use. No license is granted by implication or otherwise under any patent or patent rights of Westinghouse Electric Corporation.