Electronic TUBES

12KP4-A

CATHODE-RAY TUBE

12-INCH ROUND, GLASS
FOCUS—MAGNETIC
DEFLECTION—MAGNETIC
54-DEGREE DEFLECTION ANGLE

11¼- BY 8½-INCH PICTURE SIZE
FACEPLATE—SPHERICAL, GRAY
ALUMINIZED SCREEN
EXTERNAL CONDUCTIVE COATING

DESCRIPTION AND RATING

The 12KP4-A is a magnetic-focus and deflection, direct-view all-glass picture tube which provides a 11¼- by 8½-inch picture with rounded sides for television applications. The electron gun does not require an external ion-trap magnet. Other features of this tube include a high-quality gray faceplate which increases picture contrast and detail under high-ambient-light conditions and a reflective aluminized screen to increase light output. An external conductive coating serves as a filter capacitor when grounded.

GENERAL

ELECTRICAL

Heater Voltage . . . . . 6.3 Volts
Heater Current . . . . . 0.6 ± 10% Amperes

Focusing Method—Magnetic
Deflecting Method—Magnetic
Deflection Angle, approximate . . . . . 54 Degrees

Direct Interelectrode Capacitances, approximate
Cathode to All Other Electrodes . . . . . 5 μμf
Grid-No. 1 to All Other Electrodes . . . . . 6 μμf
External Conductive Coating to Anode
Maximum . . . . . 2500 μμf
Minimum . . . . . 500 μμf

OPTICAL

Phosphor Number—P4, Sulfide Type
Fluorescent Color—White
Phosphorescent Color—White
Persistence—Short

Faceplate—Gray
Light Transmission at Center, approximate . . . . . 66 Percent

GENERAL ELECTRIC

Supersedes ET-T701 dated 12-49

MECHANICAL

Over-all Length	$17\frac{5}{8} \pm \frac{3}{8}$	Inches
Greatest Bulb Diameter	$12\frac{7}{16} \pm \frac{1}{8}$	Inches
Minimum Useful Screen Diameter	$11\frac{1}{4}$	Inches
Neck Length	$7\frac{1}{8}$	Inches

Bulb Number, ASA Designation—J99½A1
Bulb Contact—Recessed Small-cavity Cap, JETEC No. J1-21
Base—Small-shell Duodecal 5-Pin, JETEC No. B5–57
Basing, JETEC Designation—12N
Bulb Contact Alignment
Anode Contact Aligns with Pin No. 3 Position ±30 Degrees

Mounting Position—Any

Net Weight, approximate	$11\frac{1}{2}$	Pounds

MAXIMUM RATINGS

DESIGN-CENTER VALUES*

Anode Voltage†	12,000 Max	Volts DC
Grid-No. 2 Voltage	410 Max	Volts DC
Grid-No. 1 Voltage		
Negative-Bias Value	125 Max	Volts DC
Positive-Bias Value	0 Max	Volts DC
Positive-Peak Value	2 Max	Volts
Peak Heater-Cathode Voltage‡		
Heater Negative with Respect to Cathode		
During Warm-up Period not to Exceed 15 Seconds	410 Max	Volts
After Equipment Warm-up Period	140 Max	Volts
Heater Positive with Respect to Cathode	140 Max	Volts

TYPICAL OPERATING CONDITIONS

Anode Voltage§	11,000	Volts DC
Grid-No. 2 Voltage	250	Volts DC
Grid-No. 1 Voltageπ	−22 to −58	Volts DC
Focusing Coil Current▲, approximate	135	Milliamperes DC

MAXIMUM CIRCUIT VALUES

Grid-No. 1 Circuit Resistance	1.5 Max	Megohms

* The maximum ratings provide a ten-percent safety factor in accordance with the standard design-center system of rating cathode-ray tubes. The tube will withstand the combined effects of variations in line voltage and components provided the maximum design-center values are not exceeded by more than ten percent.

† Anode and grid-No. 3 which are connected together within the tube are referred to herein as anode.

‡ Cathode should be returned to one side or to the midtap of the heater transformer winding.

§ Brightness and focus quality decrease with decreasing anode voltage. In general, the anode voltage should not be less than 9000 volts.

π For visual extinction of focused raster.

▲ For JETEC focusing coil No. 106 with distance from the yoke-reference-line to center-of-air-gap equal to 3¼ inches.

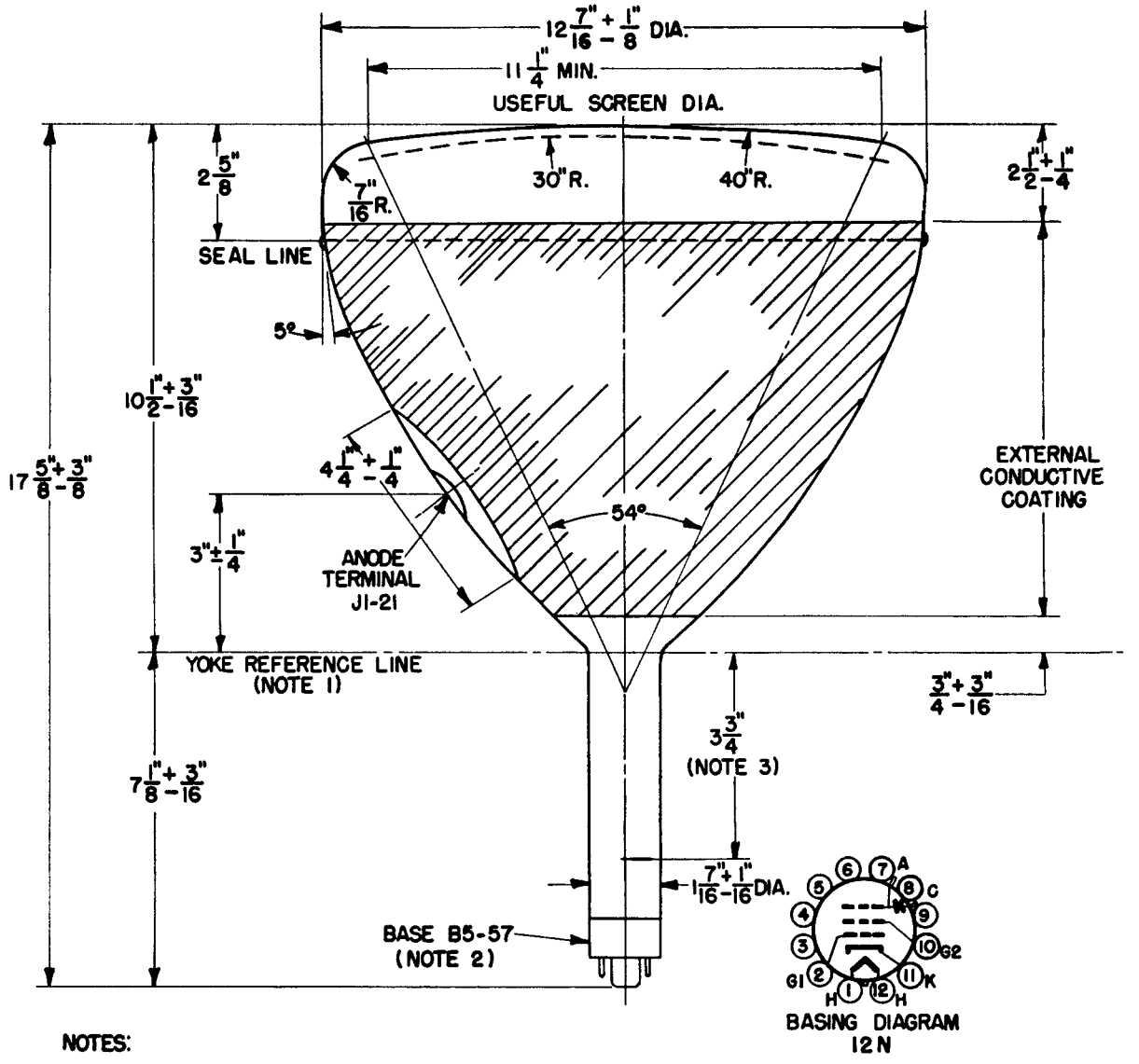

NOTES:

1. REFERENCE LINE IS DETERMINED BY THE PLANE OF THE UPPER EDGE OF THE REFERENCE-LINE GAGE (RETMA NO. 112) WHEN THE GAGE IS RESTING ON THE CONE.
2. ANODE TERMINAL ALIGNS WITH PIN-NO. 3 POSITION ±30 DEGREES.
3. RECOMMENDED POSITION FOR CENTER OF FOCUSING FIELD.