Westinghouse

6DM4A
12DM4A
17DM4A

January 1, 1963

TELEVISION DAMPING DIODE TYPE 6DM4A, 12DM4A AND 17DM4A

The 6DM4A, 12DM4A and 17DM4A are octal based indirectly-heated half-wave rectifiers designed for television damping diode service in horizontal deflection circuits.

The 12DM4A and 17DM4A have been designed for use in receivers which employ series connected heaters, especially in television receivers where the picture-tube heater is in series with other heaters. When each is employed in this type of circuit with other tubes similarly designed having the same heater current rating, heater voltage surges across individual tubes are minimized inasmuch as heater warm-up characteristic is controlled.

ELECTRICAL

Cathode			Coated Unipotential	
Heater:	6DM4A	12DM4A	17DM4A	
Voltage (ac or dc)	6.3 ± 10%	12.6	16.8	Volts
Current	1.2	0.60 ± 0.04	0.45 ± 0.03	Ampere
Warm-Up Time (Note 1)	–	11	11	Seconds
Direct Interelectrode Capacitances:				
Heater to Cathode			4	μμf
Plate to Cathode and Heater			8.5	μμf
Cathode to Plate and Heater			11.5	μμf

MECHANICAL

Bulb	T-9
Base (Note 2)	Intermediate-Shell Octal 5-Pin (JEDEC B5-85)
Short Intermediate-Shell Octal 5-Pin (JEDEC B5-147)	
Basing	4CG
Mounting Position	Any

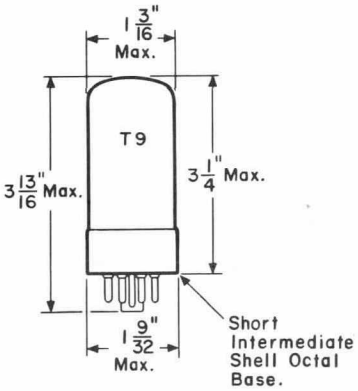

9-44

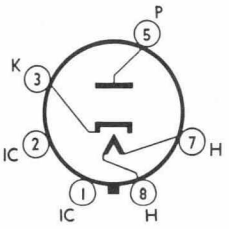

4CG

DAMPER SERVICE (Note 3)

MAXIMUM RATINGS

Design Maximum Values

Peak Inverse Voltage	5000	max.	Volts
Peak Plate Current	1200	max.	Ma.
DC Plate Current	200	max.	Ma.
Heater-Cathode Voltage:			
Heater Negative with Respect to Cathode	900	max.	Volts
Total DC and Peak	5000	max.	Volts
Heater Positive with Respect to Cathode	100	max.	Volts
Total DC and Peak	300	max.	Volts
Voltage Drop at I_b = 400 Ma.	35		Volts
Plate Dissipation	6.5	max.	Watts

NOTES

1. Heater warm-up time is defined as the time required for the voltage across the heater to reach 80% of its rated value after applying 4 times rated heater voltage to a circuit consisting of the tube heater in series with a resistance equal to 3 times rated heater voltage divided by rated heater current.

2. The bases specified for use with these tube types do not have pins in base positions 1, 4, and 6. However positions 1 and 6 have internal connections terminating in stem leads. Base terminal position 2 has a base pin which may be connected to a stem lead. Because of the close proximity of stem leads to the socket pin clips when the tube is seated in the socket, circuit tie points should not be made to socket terminals 1, 2, 4 and 6 unless adequate precautions are taken against voltage breakdown in both the tube base and the socket. To reduce the possibility of arcover, it is recommended socket clips for positions 1, 2, 4 and 6 be removed from the damper tube socket.

3. For operation in a 525 line, 30 frame system as described in "Standards of Good Engineering Practice for Television Broadcasting Stations, Federal Communications Commission". The duty of the horizontal voltage pulse not to exceed 15% of one scanning cycle. In a 525 line, 30 frame system, 15% of one horizontal scanning cycle is 10 microseconds.

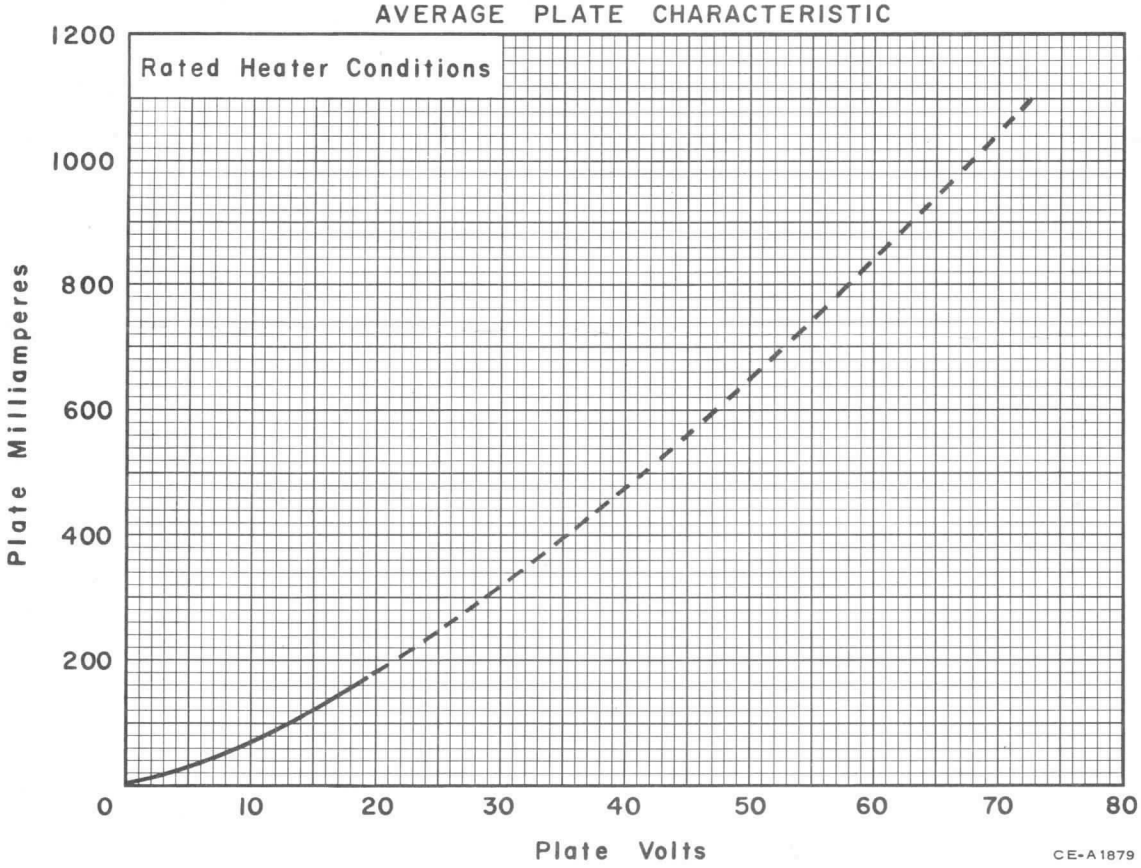

The information contained herein is supplied without assuming responsibility for infringement of patents or other rights of third parties which may result from its use. No license is granted by implication or otherwise under any patent or patent rights of Westinghouse Electric Corporation.