Hitachi, Ltd.
Tokyo Japan

HITACHI PICTURE TUBE
12BAP4

110° Deflection
Squared Corner Type

The Hitachi 12BAP4 is a directly viewed, squared corner type rectangular 12″ glass picture tube having aluminized screen 7-11/16″×9-13/16″ with nearly area of 71 square inches.

The 12BAP4 features an envelope having relatively flat, compound radius faceplate that minimizes the obstruction of outer light reflection and make the picture clearer.

Other design features of the 12BAP4 include a very short electron gun that minimizes deflection distortion and requires no ion trap magnet; a neck diameter of 1-1/8″; and "neoeighter" 7-pin base of the integral glass button type having straight through leads fitted with an indexing plug.

ELECTRICAL DATA

Focusing Method	Electrostatic
Deflection Angles (approx.)	
Horizontal	101 Degrees
Vertical	82 Degrees
Diagonal	110 Degrees
Direct Interelectrode Capacitances	
Cathode to All Other Electrodes (approx.)	5 μμf
Grid No. 1 to All Other Electrodes (approx.)	6 μμf
External Conductive Coating to Anode	900 μμf max.
	400 μμf min.
Heater Characteristics	
Heater Voltage	6.3 Volts
Heater Current	0.3 Amperes
Heater Warm up Time	11 Seconds

from JEDEC release #4417, Sept. 16, 1963

OPTICAL DATA

Phosphor Number ..... P4-Sulfide Type, Aluminized
Light Transmittance at Center (approx.) ..... 78 Percent

MECHANICAL DATA

Overall Length ..... 9-5/16±1/4 Inches
Minimum Useful Screen Dimensions (projected)
- Diagonal ..... 11-5/16 Inches
- Horizontal Axis ..... 9-13/16 Inches
- Vertical Axis ..... 7-11/16 Inches
- Area ..... 71 Sq. Inches

Neck Length ..... 4-1/8±1/8 Inches
Bulb Contact ..... JEDEC No. J1-21
Base ..... JEDEC No. B7-208
Basing 8HR
Bulb Contact Alignment with Pin Position No. 7 ..... 30 Degrees
Weight (approx.) ..... 5.3 Pounds

MAXIMUM RATINGS (Design Maximum Values)

Unless otherwise specified, voltage values are positive and measured with respect to cathode.

Maximum Anode Voltage ..... 14,000 Volts
Minimum Anode Voltage ..... 9,000 Volts
Maximum Grid No. 4 (Focusing Electrode) Voltage ..... +1,100 Volts
..... −550 Volts
Maximum Grid No. 2 Voltage ..... 550 Volts
Minimum Grid No. 2 Voltage ..... 200 Volts
Grid No. 1 Voltage
- Maximum Negative Value ..... 154 Volts
- Maximum Negative Peak Value ..... 200 Volts
- Maximum Positive Value ..... 0 Volts
- Maximum Positive Peak Value ..... 2 Volts

Maximum Heater-Cathode Voltage
- Heater Negative with Respect to Cathode during
  - Warm-up Period not to Exceed 15 Seconds ..... 450 Volts
  - After Equipment Warm-up Period ..... 200 Volts
- Heater Positive with Respect to Cathode ..... 200 Volts

TYPICAL OPERATING CONDITION

Grid Drive Service

Unless otherwise specified, all voltage values are positive with respect to cathode.

Anode Voltage.....10,000 Volts
Grid No. 4 Voltage (Focusing Electrode) (Notes 2 & 3).....0 to 400 Volts
Grid No. 2 Voltage.....400 Volts
Grid No. 1 Voltage (Note 1).....−36 to −94 Volts

Cathode Drive Service

Unless otherwise specified, all voltage values are positive with respect to Grid No. 1.
Anode Voltage.....10,000 Volts
Grid No. 4 Voltage (Focusing Electrode) (Note 2 & 3).....0 to 400 Volts
Grid No. 2 Voltage.....400 Volts
Cathode Voltage (Note 1).....36 to 78 Volts

Maximum Circuit Value

Maximum Grid No. 1 Circuit Resistance.....1.5 Megohoms

Note 1. Visual extinction of focused raster.

Note 2. With the combined grid No. 1 bias voltage and video-signal valtage adjusted to give an anode current of 100 microamperes on a 7-11/16″ ×9-13/16″ pattern from RCA 2F21 Monoscope or equivalent.

Note 3. Individual tubes will have satisfactory focus at some value between 0 and +400 Volts.

Warning

X-ray radiation shielding may be necessary to protect against possible danger of personal injury from prolonged exposure at close range if this tube is operated at higher than the manufactarer's Maximum Rated Anode Voltage or 16,000 Volts, whichever is less.

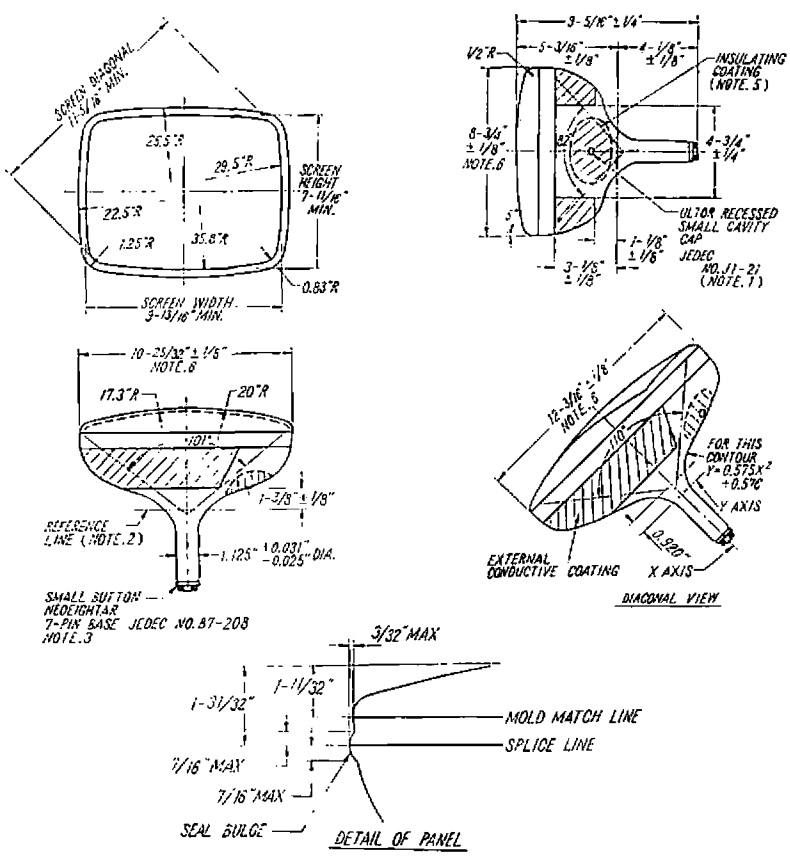

SOCKET CONNECTIONS

Pin. 1: Heater
Pin. 2: Grid No. 1
Pin. 3: Grid No. 2
Pin. 4: Grid No. 4
Pin. 6: Grid No. 1

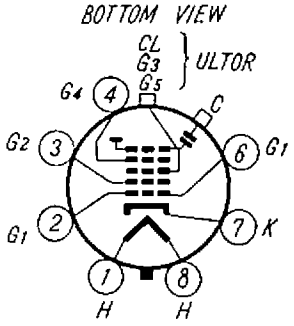

8 HR

Pin. 7: Cathode
Pin. 8: Heater
Cap : Ultor (Grid No. 3, Grid No. 5 Collector)
C: External Conductive Coating

NOTE 1: The plane through the tube axis and pin No. 4 may vary from the plane through the tube axis and ultor terminal by angular tolerance (measured about the tube axis) of ±30°. Ultor terminal is on same side as pin No. 4.

NOTE 2: With tube neck inserted through flared end of reference-line gauge JEDEC No. 126 and with tube seated in gauge, the reference-line is determined by the intersection of the plane CC′ of the gauge with the glass funnel.

NOTE 3: Socket for this base should not be rigidly mounted; it should have flexible leads and be allowed to move freely. The design of the socket should be such that the circuit wiring cannot impress lateral strains through the socket contacts on the base pins. Bottom circumference of base wafer will fall within a circle concentric with bulb axis and having a diameter of 1-3/4″.

NOTE 4: External conductive coating must be grounded.

NOTE 5: To clean this area, wipe only with soft dry lintless cloth.

NOTE 6: Measured at the mold match line.

Hitachi, Ltd.
Tokyo Japan

Head Office: 4, 1-chome, Marunouchi, Chiyoda-ku, Tokyo
Tel. Tokyo (212) 1111 (80 lines)
Cable Address: "HITACHY" TOKYO
Codes: All Codes Used

CE-E022 Printed in Japan RM-N(HK)