Electronic TUBES

12B4-A

TRIODE

FOR TV VERTICAL DEFLECTION APPLICATIONS

DESCRIPTION AND RATING

The 12B4-A is a miniature low-mu triode designed primarily for service as a vertical-deflection amplifier in television receivers. The tube features high plate current at relatively low plate voltages and is capable of withstanding the high pulse voltages normally encountered in this application.

In addition, the 12B4-A exhibits a controlled heater warm-up characteristic which makes the tube particularly suited for use in television receivers which employ series-connected heaters. When the 12B4-A is used in conjunction with other 600-milliampere types which exhibit essentially the same heater warm-up characteristic, heater voltage surges across the individual tubes are minimized during the warm-up period.

Except for the controlled heater warm-up time characteristic, the 12B4-A is identical to the 12B4.

GENERAL

ELECTRICAL

Cathode—Coated Unipotential	Series	Parallel
Heater Voltage, AC or DC	12.6	6.3 Volts
Heater Current	0.3	0.6 Amperes
Heater Warm-up Time*	—	11 Seconds
Direct Interelectrode Capacitances, approximate†		
Grid to Plate	4.8	μμf
Input	5.0	μμf
Output	1.5	μμf

MECHANICAL

Mounting Position—Any
Envelope—T-6½, Glass
Base—E9-1, Small Button 9-Pin

MAXIMUM RATINGS

	Class A_1 Amplifier	Vertical-Deflection Amplifier‡	
DC Plate Voltage	550	550	Volts
Peak Positive Pulse Plate Voltage	—	1000§	Volts
Peak Negative Grid Voltage	—	250	Volts
Plate Dissipation	5.5	5.5π	Watts
DC Cathode Current	—	30	Milliamperes
Peak Cathode Current	—	105	Milliamperes
Heater-Cathode Voltage			
Heater Positive with Respect to Cathode			
DC Component	100	100	Volts
Total DC and Peak	200	200	Volts
Heater Negative with Respect to Cathode			
Total DC and Peak	200	200	Volts
Grid Circuit Resistance			
With Fixed Bias	0.47	—	Megohms
With Cathode Bias	2.2	2.2	Megohms

BASING DIAGRAM

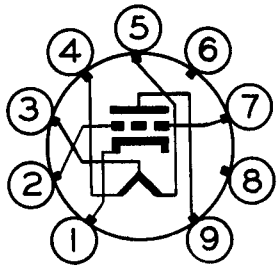

RETMA 9AG

TERMINAL CONNECTIONS

Pin 1—Cathode
Pin 2—Grid
Pin 3—Heater Center-Tap
Pin 4—Heater
Pin 5—Heater
Pin 6—No Connection
Pin 7—Grid
Pin 8—No Connection
Pin 9—Plate

PHYSICAL DIMENSIONS

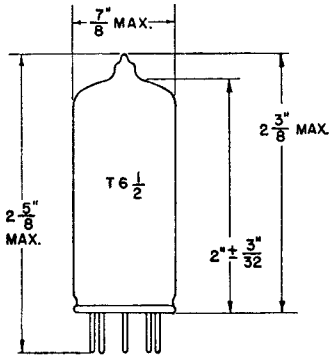

RETMA 6-3

GENERAL ELECTRIC

CHARACTERISTICS AND TYPICAL OPERATION

CLASS A_1 AMPLIFER

Plate Voltage	150	150	Volts
Grid Voltage	−23	−17.5	Volts
Amplification Factor	—	6.5	
Plate Resistance, approximate	—	1030	Ohms
Transconductance	—	6300	Micromhos
Plate Current	9.6	34	Milliamperes
Grid Voltage, approximate I_b=200 Microamperes	—	−32	Volts

* Heater warm-up time is defined as the time required in the circuit shown at the right for the voltage across the heater terminals to increase from zero to the heater test voltage (V_1). For this type, E=25 volts (RMS or DC), V_b=5.0 volts (RMS or DC), and R=31.5 ohms.

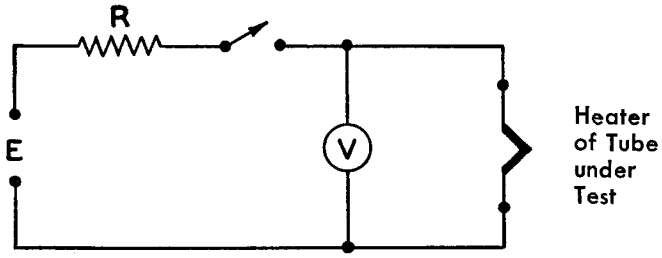

† Without external shield.

‡ For operation in a 525-line, 30-frame television system as described in "Standards of Good Engineering Practice Concerning Television Broadcast Stations," Federal Communications Commission. The duty cycle of the voltage pulse must not exceed 15 percent of one scanning cycle.

§ Value given is to be considered as an Absolute Maximum Rating. In this case, the combined effect of supply voltage variation, manufacturing variation including components in the equipment, and adjustment of equipment controls should not cause the rated value to be exceeded.

π In stages operating with grid-leak bias, an adequate cathode-bias resistor or other suitable means is required to protect the tube in the absence of excitation.

AVERAGE PLATE CHARACTERISTICS

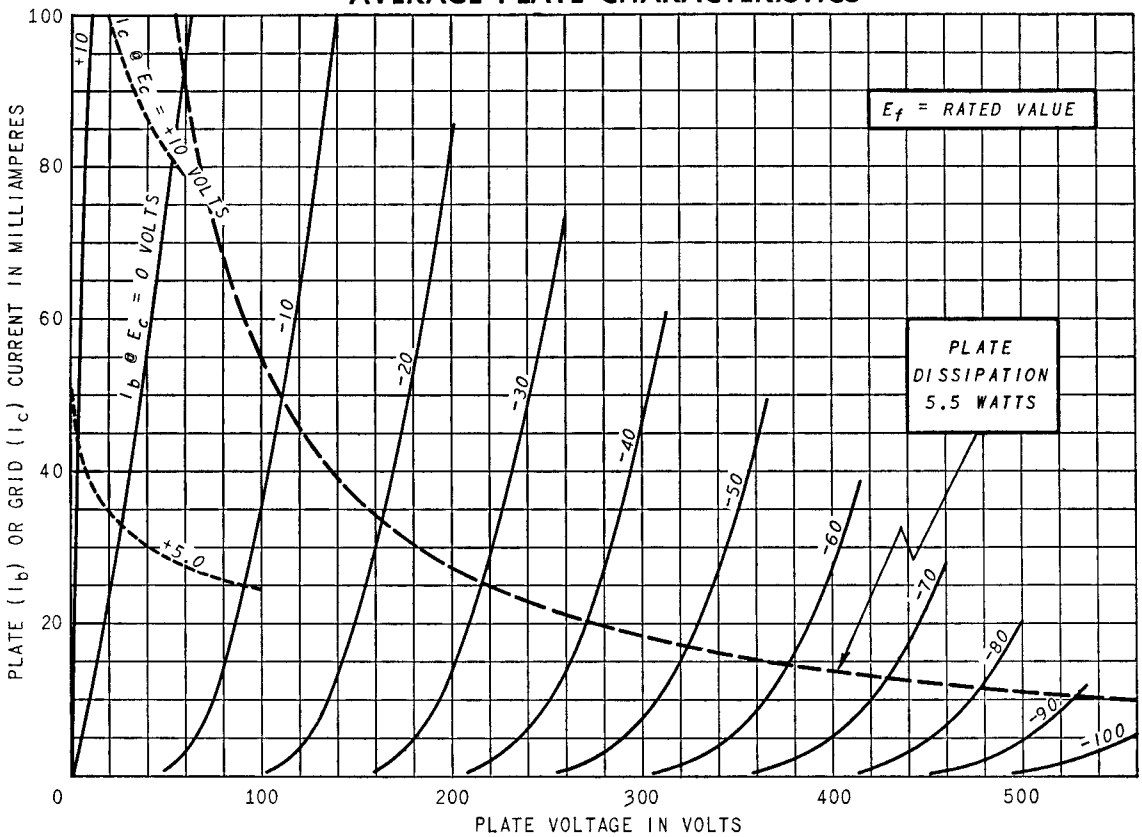
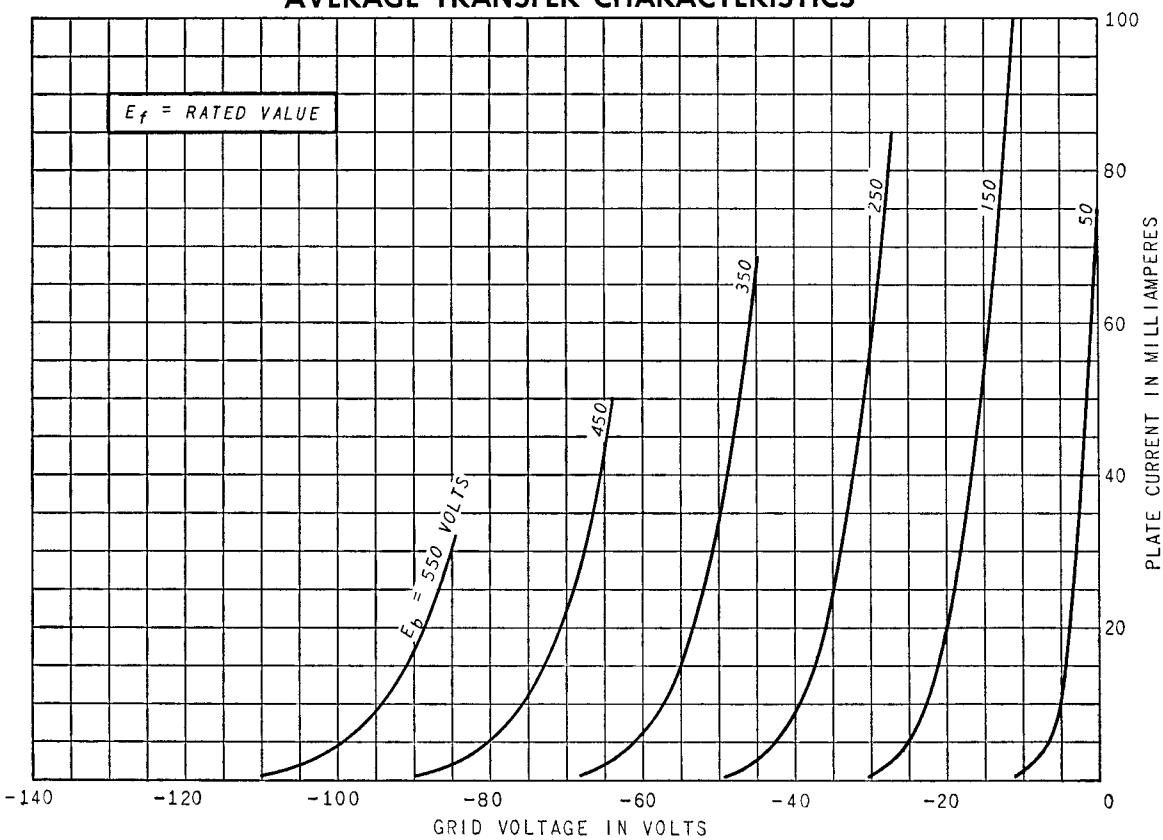
AVERAGE TRANSFER CHARACTERISTICS