DUMONT

CATHODE-RAY TUBE

TYPE 12ATP-

The Du Mont Type 12ATP- is a 12 7/16-inch diameter, three beam, electrostatic focus and deflection cathode-ray tube. The use of post acceleration allows maximum deflection sensitivity with high overall accelerating voltages. The deflection plate connections are made through the neck of the tube to facilitate high frequency operation. The screen is aluminized for greater light output and to minimize screen charging effects.

GENERAL CHARACTERISTICS[1]

Electrical Data

Focuring Method	Electrostatic	
Deflection Method	Electrostatic	
Direct Interelectrode Capacitances, Maximum		
Cathode to all other electrodes	7.0	μμf
Grid No. 1 to all other electrodes	7.0	μμf
D1 to D2	5.0	μμf
D3 to D4	5.0	μμf
D1 to all other electrodes	9.9	μμf
D2 to all other electrodes	9.9	μμf
D3 to all other electrodes	8.6	μμf
D4 to all other electrodes	8.6	μμf

Optical Data

Phosphor Number	28
Fluorescence	Yellow-Green
Phosphorescence	Yellow-Green
Persistence	Long

Mechanical Data

Overall Length	25 5/8 ± 3/8	Inches
Greatest Diameter of Bulb	12 7/16 ± 1/16	Inches
Minimum Useful Screen Diameter	11.0	Inches
Bulb Contact	J1-22	
Neck Contacts	J1-25	
Base	B25-139	
Basing	Special	

Allen B. Du Mont Laboratories
Divisions of Fairchild Camera and Instrument Corp.
Clifton, N. J.

DE-6317
11/17/61

DUMONT

CATHODE-RAY TUBE

TYPE 12ATP-

GENERAL CHARACTERISTICS (Mechanical Data) (Continued)

Base Alignment:		
D1D2 trace aligns with Base Key	± 10	Degrees
Positive voltage on D1 deflects beam approximately toward Base Key		
Positive voltage on D3 deflects beam approximately toward Base Pin No. 23		
Bulb Contact Alignment:		
J1-22 cap aligns with Base Key	± 10	Degrees
J1-22 cap aligns with D1D2 trace	± 5	Degrees
J1-22 cap on same side as Base Key		
Trace Alignment:		
Angle between D3D4 and D1D2 traces, Guns "A" and "B"	90 ± 1	Degrees
Angle between D3D4 and D1D2 traces, Gun "C"	90 ± 2	Degrees

RATINGS (Absolute Maximum Values)

Heater Voltage	6.3	Volts
Heater Current at 6.3 Volts	1.8 ± 10%	Amperes
Post Accelerator Voltage	15,000	Max. Volts DC
Astigmatism Electrode Voltage	6000	Max. Volts DC
Accelerator Voltage	6000	Max. Volts DC
Accelerator Input	6	Max. Watts
Ratio Post Accelerator Voltage to Accelerator Voltage[2]	2.0	
Focusing Electrode Voltage	2000	Max. Volts DC
Grid No. 1 Voltage		
Negative Bias Value	200	Max. Volts DC
Positive Bias Value	0	Max. Volts DC
Positive Peak Value	0	Max. Volts
Peak Heater-Cathode Voltage		
Heater negative with respect to cathode	180	Max. Volts
Heater positive with respect to cathode	180	Max. Volts
Peak Voltage between Accelerator and any Deflection Electrode	1250	Max. Volts

DuMont

CATHODE-RAY TUBE

TYPE 12ATP-

TYPICAL OPERATING CONDITIONS

Post Accelerator Voltage[2]	10,000	Volts DC
Astigmatism Electrode Voltage[3]	4900 to 5500	Volts DC
Accelerator Voltage[2]	5000	Volts DC
Focusing Electrode Voltage	1275 to 1725	Volts DC
Grid No. Voltage[4]	-64 to -86	Volts DC
Deflection Factors, Guns "A" and "B"		
D1D2	103 to 127	Volts DC/Inch
D3D4	81 to 99	Volts DC/Inch
Deflection Factors, Gun "C"		
D1D2	103 to 127	Volts DC/Inch
D3D4	67 to 83	Volts DC/Inch
Modulation[5]	30	Volts DC (Max.)
Line Width "A"[3, 5]	.013	Max. Inch
Line Width "B"[3, 5, 9]	.018	Max. Inch
Useful Scan:		
Gun "A"	6.75 x 4.31	Inches
Gun "B"	6.75 x 4.31	Inches
Gun "C"	6.75 x 2.15	Inches
Pattern Distortion[6]		
Focusing Electrode Current (for any operating condition)	-15 to +10	μA
Spot Position (Focused and Undeflected)[7]	Within a 7/16-inch radius circle	

MAXIMUM CIRCUIT VALUES

Grid No. 1 Circuit Resistance	1.5	Max. Megohms
Resistance in any Deflecting-Electrode Circuit[8]	1.0	Max. Megohms

DUMONT

CATHODE-RAY TUBE

TYPE 12ATP-

NOTES

1. Values are for each gun unless otherwise specified.

2. This tube is designed for optimum performance when operating at an Eb3/Eb2 ratio of 2.0. Operation at other ratios of Eb3/Eb2 may result in changes in deflection uniformity and pattern distortion.

3. With focus and astigmatism voltages adjusted for the best center line width, line widths "A" and "B" shall be as specified. The specified spot position for each gun shall be used to locate the points for line widths "A" and "B". At no point within the specified scan area of any gun shall the line width exceed 0.030 inch when compromise focus and astigmatism are used.

4. For the visual extinction of the undeflected, focused spot.

5. For an Ib3 of 5 μADC, measured in accordance with MIL-E-1 specifications.

6. For Gun "A": All portions of a raster pattern, adjusted so its widest points just touch the sides of a 6.95 x 4.41-inch rectangle, will fall within the area bounded by the 6.95 x 4.41-inch rectangle and an inscribed 6.55 x 4.21-inch rectangle.

   The horizontal trace of Gun "A", when passing through the tube face center, shall fall entirely within a rectangle of 6.95 x .063 inches, centered about the horizontal trace.

   For Gun "B": All portions of a raster pattern, adjusted so its widest points just touch the sides of a 6.95 x 4.44-inch rectangle, will fall within the area bounded by the 6.95 x 4.44-inch rectangle and an inscribed 6.55 x 4.18-inch rectangle.

   For Gun "C": All portions of a raster pattern, adjusted so its widest points just touch the sides of a 7.15 x 2.27-inch rectangle, will fall within the area bounded by the 7.15 x 2.27-inch rectangle and an inscribed 6.35 x 2.01-inch rectangle.

7. With the deflecting electrodes connected to the accelerator and with the tube shielded against external influences, each focused and undeflected spot will fall within a 7/16-inch radius circle centered about each respective spot position specified on the outline drawing.

8. It is recommended that the deflecting-electrode circuit resistances be approximately equal. Higher resistance values up to 5 megohms may be used for low beam current operation.

9. Line width "B" shall be measured at 1.6 inches from the undeflected spot positions for guns "A" and "B", and at 0.8 inch for gun "C".

DU MONT

CATHODE-RAY TUBE

12ATP-

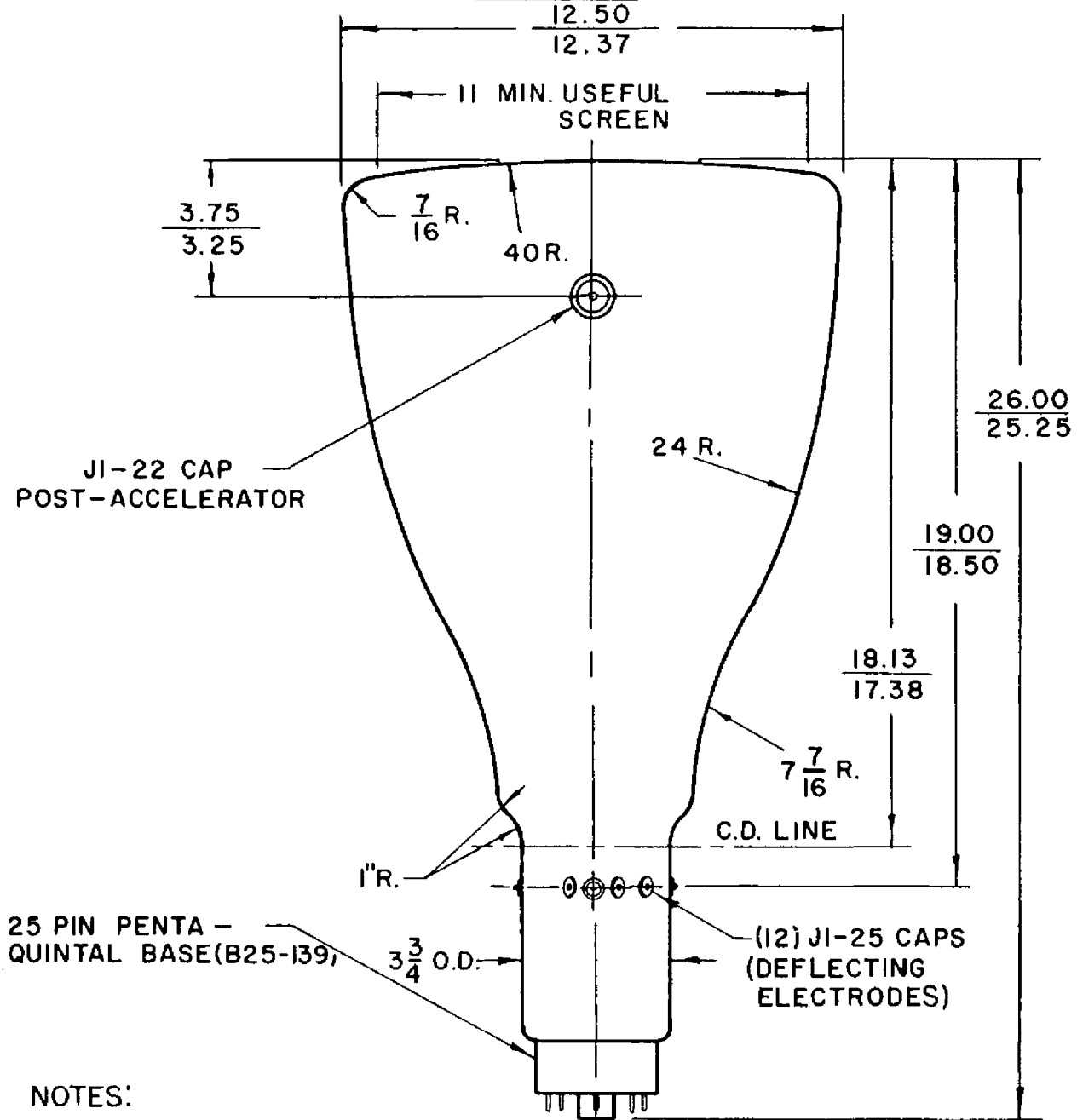

NOTES:

1. JI-22 CAP ALIGNS WITH DI D2 TRACE ±5°.
2. JI-25 CAPS 20° APART UNLESS OTHERWISE SPEC.
3. BASE KEY ALIGNS WITH DI D2 TRACE ± 10°.

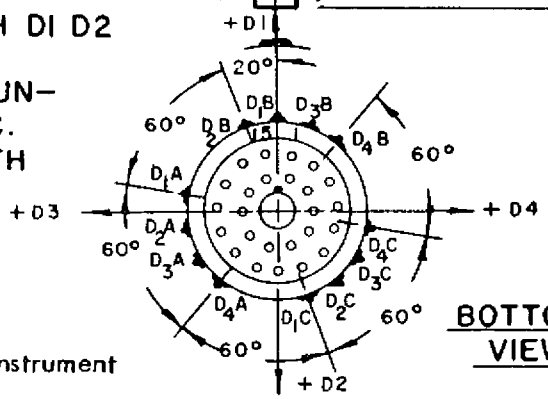

ALL ANGLES ±8°

BOTTOM VIEW

Allen B. Du Mont Laboratories, Inc.
Divisions of Fairchild Camera and Instrument Corp.
Clifton, New Jersey

DE-6317-5
11-16-61

DU MONT

CATHODE-RAY TUBE

12ATP-

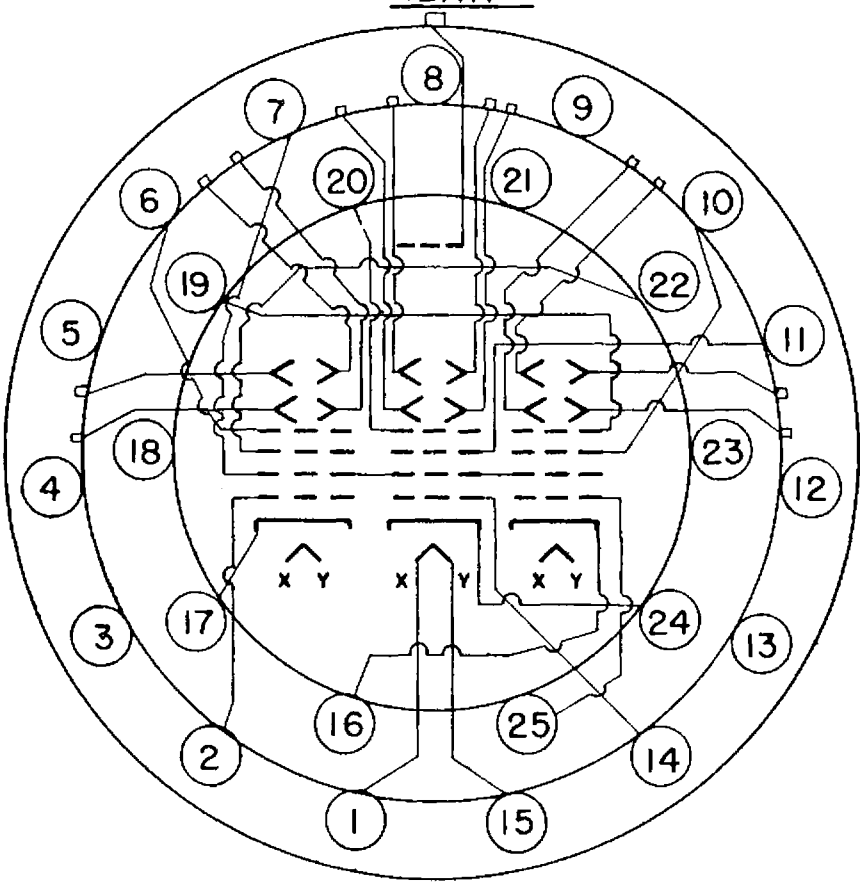

ELEMENT	BOTTOM VIEW PIN NUMBERS UNIT A	UNIT B	UNIT C
HEATER (COMMON)	1	1	1
HEATER (COMMON)	15	15	15
CATHODE	17	24	16
FOCUSING ELECTRODE	22	11	10
ACCELERATOR (COMMON)	7	7	7
ASTIG. ADJUST. ELECTRODE	6	20	19
GRID NO. 1	2	14	25

NOTE:

THE FOCUSED, UNDEFLECTED SPOTS CENTER ON POSITIONS INDICATED WITHIN A 7/16 R. CIRCLE.

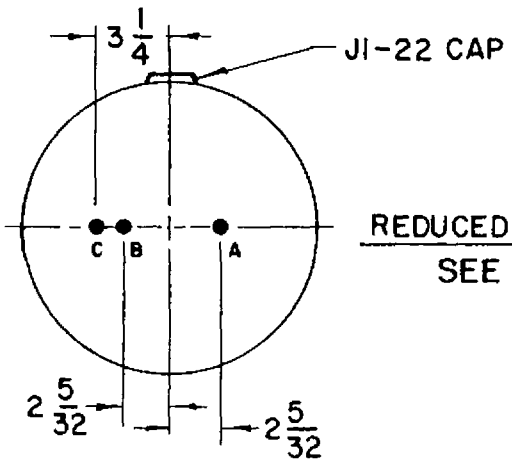

REDUCED FACE VIEW
SEE NOTE

Allen B. Du Mont Laboratories, Inc.
Divisions of Fairchild Camera and Instrument Corp.
Clifton, New Jersey

DE-6317-3
11-16-61