CHARACTERISTICS

GENERAL DATA

Focusing Method			Electrostatic	
Deflecting Method			Electrostatic	
Phosphor*	P7	P14	P19	P25
Fluorescence	Blue-White	Purple	Orange	Orange
Phosphorescence	Yellow	Orange	Orange	Orange
Persistence	Long	Med. Long	Long	Long
Faceplate			Gray Filter Glass	

* In addition to the screens shown, the 12ANP- can be supplied with several other screen phosphors.

ELECTRICAL DATA

Heater Voltage	6.3 Volts
Heater Current	0.6 ± 10% Ampere
Direct Interelectrode Capacitances (Approx.)	
Cathode to All Other Electrodes	6.0 pf
Grid No. 1 to All Other Electrodes	8.0 pf
Between Deflecting Plates 1-2	5.0 pf
Between Deflecting Plates 3-4	3.0 pf
Deflecting Plate 1 to All Other Electrodes	14.5 pf
Deflecting Plate 2 to All Other Electrodes	13.0 pf
Deflecting Plate 3 to All Other Electrodes	6.2 pf
Deflecting Plate 4 to All Other Electrodes	6.5 pf

MECHANICAL DATA

Minimum Useful Screen Diameter	11 Inches
Bulb Contact (Recessed Small Cavity Cap)	J1-22
Neck Contacts (Small Ball Caps)	J1-25
Base (Medium Shell Diheptal 12-Pin)	B12-37
Basing	14AW
J1-22 Contact Aligns with Trace D3-D4	±10 Degrees
J1-22 Contact Aligns with Pin No. 11	±10 Degrees
Neck Contact (A2) Aligns with Trace D1-D2	±10 Degrees
Positive Voltage on D1 Deflects Beam Approx. Away From A2	
Positive Voltage on D3 Deflects Beam Approx. Away From Post Accelerator Button	

RATINGS

MAXIMUM RATINGS (Absolute Maximum Values)

Anode Input[1]	6 Watts
Anode No. 3 Voltage	16,000 Volts dc
Anode No. 2 Voltage	8,000 Volts dc
Anode No. 1 Voltage	3,000 Volts dc
Grid No. 1 Voltage	
Negative Bias Value	300 Volts dc
Positive Bias Value	0 Volts dc

QUICK REFERENCE DATA

Oscilloscope Tube
12" Direct Viewed
Round Glass Type
Electrostatic Deflection
Electrostatic Focus
Post Deflection Acceleration
Aluminized Screen

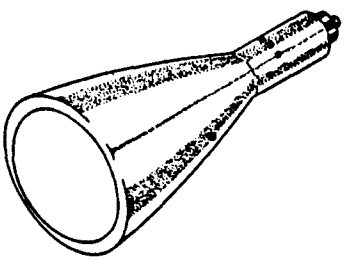

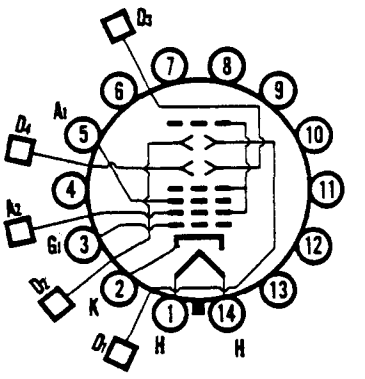

14AW

SYLVANIA ELECTRIC PRODUCTS INC.

Electronic Components Group
ELECTRONIC TUBE DIVISION
SENECA FALLS, NEW YORK

A Technical Publication

May 5, 1965

MAXIMUM RATINGS (Absolute Maximum Values) (Cont'd)

Positive Peak Value	2	Volts
Peak-Heater-Cathode Voltage		
Heater Negative with Respect to Cathode	180	Volts
Heater Positive with Respect to Cathode	180	Volts
Peak Voltage Between Anode No. 2 and Any Deflecting Plate	1500	Volts
Ratio (Post Accelerator Voltage to Anode Voltage)	2:5	

TYPICAL OPERATING CONDITIONS

Anode No. 3 Voltage	9700	Volts dc
Anode No. 2 Voltage	6100	Volts dc
Anode No. 1 Voltage for Focus	1510 to 2225	Volts dc
Grid No. 1 Voltage Required for Cutoff[2]	-135 to -202	Volts dc
Deflection Factors[3]		
Deflecting Plates 1-2	100 to 150	Volts dc/Inch
Deflecting Plates 3-4	100 to 150	Volts dc/Inch
Modulation[4]	45	Volts Max.
Line Width "A"[4]	.5	mm
Line Width "B"[4]	.75	mm
Focus Electrode Current[4]	-25 to +25	µa
Spot Position, Undeflected	Within 20 mm Square	
Angle Between D1-D2 Trace and D3-D4 Trace	90 ± 1	Degree

CIRCUIT VALUES

Grid No. 1 Circuit Resistance	2.0	Megohms Max.
Resistance in Any Deflection Plate Circuit	5.0	Megohms Max.

NOTES:

1. Anode input equals the product of Anode No. 2 voltage and average Anode No. 2 current.

2. For visual extinction of undeflected focused spot.

3. Deflection plates 1 and 2 are nearer the screen.

4. Measured in accordance with MIL-E-1 specification at a post accelerator current (IA3) equal to 25 µa.

OUTLINE

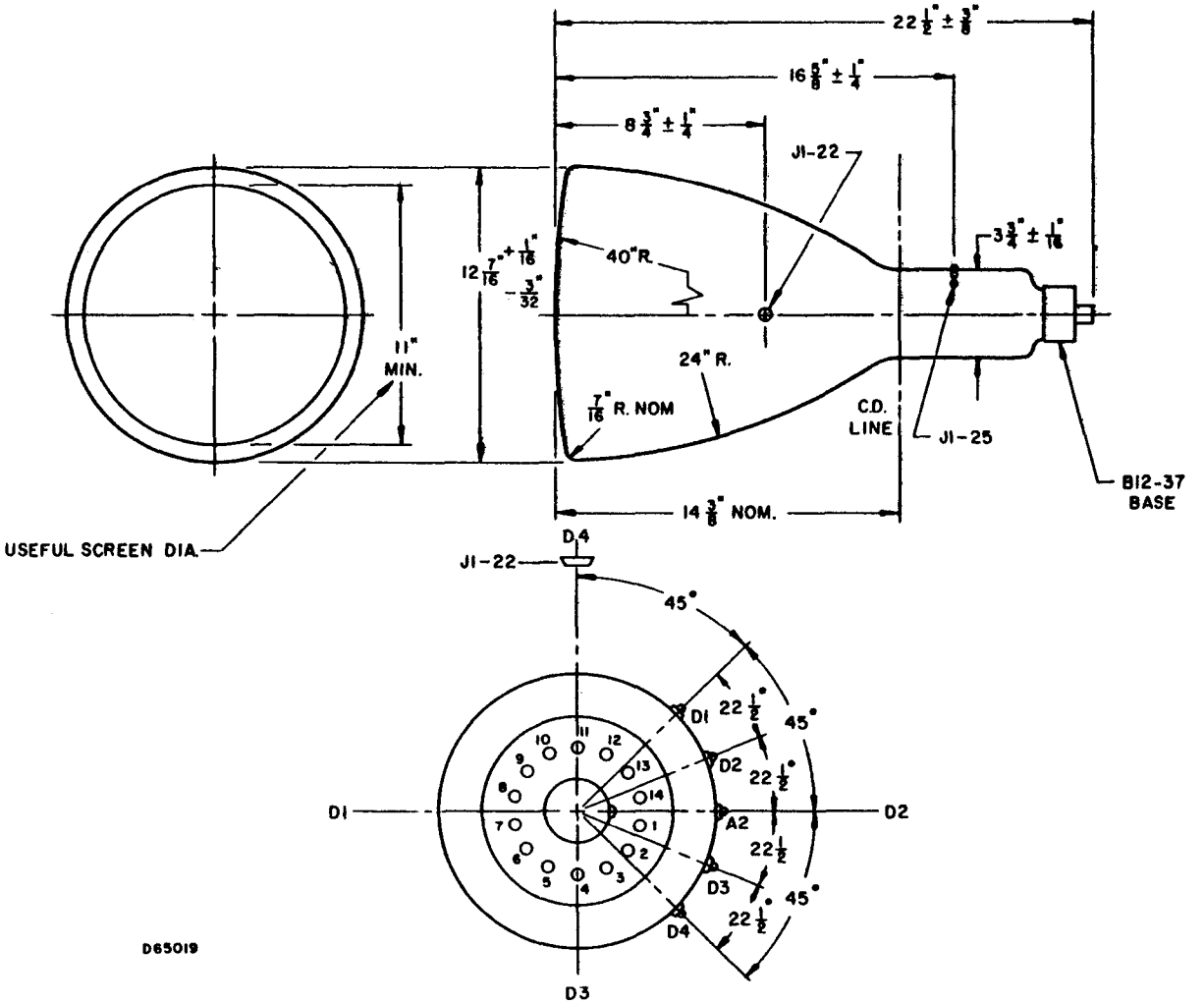

BOTTOM VIEW OF BASE