DUMONT

CATHODE-RAY TUBE

TYPE 12AMP-

The Du Mont Type 12AMP- is a 12 7/16-inch diameter, single beam, fast writing rate, electrostatic focus and deflection cathode-ray tube, suitable for high speed radar displays. A unique, advanced design, low-drive electron gun permits the use of transistorized video circuitry with electrostatic deflection. The use of post acceleration allows maximum deflection sensitivity with high overall accelerating voltages. A special deflection structure is incorporated so that minimum spot defocusing is obtained with deflection. The deflection plate connections are made through the neck of the tube to facilitate high frequency operation.

The screen is aluminized for greater light output and to minimize screen charging effects.

GENERAL CHARACTERISTICS

Electrical Data

Focusing Method	Electrostatic	
Deflecting Method	Electrostatic	
Direct Interelectrode Capacitances, Approximate		
Cathode to all other electrodes	3.7	μμf
Grid No. 1 to all other electrodes	9.8	μμf
Modulation Adjustment Electrode to all other electrodes	8.8	μμf
D1 to D2	3.8	μμf
D3 to D4	1.6	μμf
D1 to all other electrodes	8.6	μμf
D2 to all other electrodes	8.6	μμf
D3 to all other electrodes	3.7	μμf
D4 to all other electrodes	3.9	μμf

Optical Data

Phosphor Number	2	7	11	14	19	25
Fluorescent Color	Blue-Green	Blue-White	Blue	Blue	Orange	Orange
Phosphorescent Color	Green	Yellow	----	Orange	Orange	Orange
Persistence	Long	Long	Short	Long	Very Long (Note 1)	Very Long

DE-5845 - 2
5/24/60

Allen B. Du Mont Laboratories, Inc.
Clifton, New Jersey

FORM 809 SC-7-59-5M

from JEDEC release #2852, June 20, 1960

DUMONT

CATHODE-RAY TUBE

TYPE 12AMP-

GENERAL CHARACTERISTICS (Continued)

Mechanical Data

Overall Length	23 5/16 ± 3/16	Inches
Greatest Diameter of Bulb	12 7/16 ± 1/16	Inches
Minimum Useful Screen Diameter	11.0	Inches
Bulb Contact	J1-22	
Neck Contacts	J1-25	
Base	B6-63	
Basing	12BH	
Base Alignment:		
D1D2 trace aligns with Pin No. 1 and tube axis	± 10	Degrees
Positive voltage on D1 deflects beam approximately toward Base Pin No. 1		
Positive voltage on D3 deflects beam approximately toward Base Pin No. 10		
Bulb Contact Alignment:		
J1-22 Cap aligns with Pin Position No. 1	± 10	Degrees
J1-22 Cap aligns with D1D2 trace	± 10	Degrees
J1-22 Cap on same side as Pin No. 1		
Trace Alignment:		
Angle between D3D4 and D1D2 traces	90 ± 1	Degrees

RATINGS (Design Maximum Values)

Heater Voltage	6.3	Volts
Heater Current at 6.3 Volts	0.6 ± 10%	Ampere
Post Accelerator Voltage	15,000	Max. Volts DC
Accelerator Voltage	8500	Max. Volts DC
Accelerator Input	6	Max. Watts
Ratio Post Accelerator Voltage to Accelerator Voltage[2]	1.7	
Astigmatism Electrode Voltage	8500	Max. Volts DC
Focusing Electrode Voltage	3000	Max. Volts DC
Modulation Adjustment Electrode	200	Max. Volts DC
Cathode to Grid No. 1 Voltage		
Positive Bias Value	100	Max. Volts DC
Positive Peak Value	100	Max. Volts
Negative Bias Value	0	Max. Volts DC
Negative Peak Value	0	Max. Volts

DUMONT

CATHODE-RAY TUBE

TYPE 12AMP-

RATINGS (Design Maximum Values) (Continued)

Peak Heater-Cathode Voltage:		
Heater negative with respect to cathode		
During warm-up period not to exceed 15 seconds	410	Max. Volts
After equipment warm-up period	180	Max. Volts
Heater positive with respect to cathode	180	Max. Volts
Peak Voltage between Accelerator and any Deflection Electrode	1500	Max. Volts

TYPICAL OPERATING CONDITIONS (Cathode Drive)[3]

Post Accelerator Voltage[2]	9700	Volts DC
Accelerator Voltage[2]	5650	Volts DC
Astigmatism Electrode Voltage[4]	5650	Volts DC
Focusing Electrode Voltage[5]	1550 to 1850	Volts DC
Modulation Adjustment Electrode[6]	40 to 120	Max. Volts DC
Cathode Voltage[6]	11.5	Volts DC
Deflection Factors:		
D1D2	112 to 125	Volts DC/Inch
D3D4	112 to 125	Volts DC/Inch
Modulation[7]	11.5	Volts DC (Max.)
Line Width "A"[8]	.020	Max. Inch
Focusing Electrode Current (for any operating condition)	-5 to +5	μA
Spot Position (Focused and Undeflected)[9]	Within a 3/4-Inch Square	

MAXIMUM CIRCUIT VALUES

Grid No. 1 Circuit Resistance	1.5	Max. Megohms
Resistance in any Deflecting-Electrode Circuit[10]	5.0	Max. Megohms

Allen B. Du Mont Laboratories, Inc.
Clifton, New Jersey

FORM 809 SC-7-58-5M

DUMONT

CATHODE-RAY TUBE

TYPE 12AMP-

NOTES

1. To avoid severe and permanent damage to the screen when operating under static conditions, it is recommended that the screen current not exceed 5 μADC.

2. This tube is designed for optimum performance when operating at an Eb3/Eb2 ratio of 1.7. Operation at other ratios of Eb3/Eb2 may result in changes in deflection uniformity and pattern distortion.

3. Voltage values measured with respect to the Grid No. 1.

4. The astigmatism electrode should be adjusted for optimum spot shape.

5. Measured in accordance with MIL-E-1 specifications. Dynamic defocusing may be used to improve overall focus.

6. The modulation adjustment electrode is adjusted for a cathode voltage of +11.5 volts for the visual extinction of the undeflected, focused spot.

7. For an Ib3 of 55 μADC.

8. For an Ib3 of 5 μADC. Line width remains essentially constant for a wide range of current.

9. With the deflecting electrodes connected to the accelerator and with the tube shielded against external influences, the focused and undeflected spot will fall within a 3/4-inch square centered with respect to the tube face center and the sides of which are parallel to the traces produced by the deflection plate pairs.

10. It is recommended that the deflecting-electrode circuit resistances be approximately equal.

Allen B. Du Mont Laboratories, Inc.
Clifton, New Jersey

FORM 608 8C-7-59-5M

DUMONT

CATHODE-RAY TUBE

12 AMP-

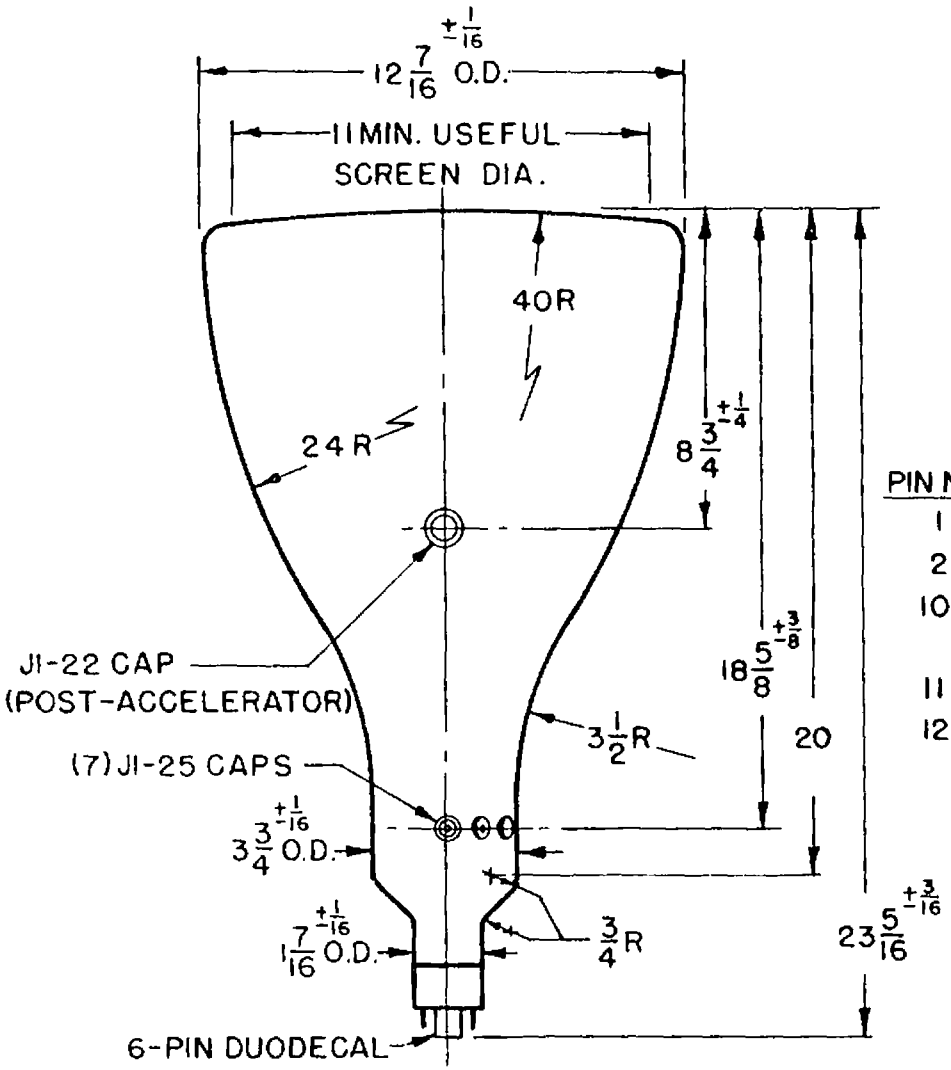

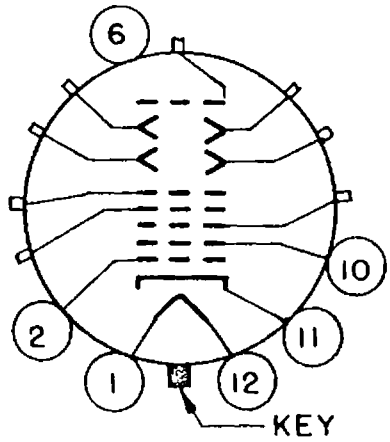

BOTTOM VIEW

PIN NO.	ELEMENT
1	HEATER
2	GRID NO. 1
10	MODULATION ADJUSTMENT ELECTRODE
11	CATHODE
12	HEATER

NOTE:
1. ALL ANGLES ± 5°

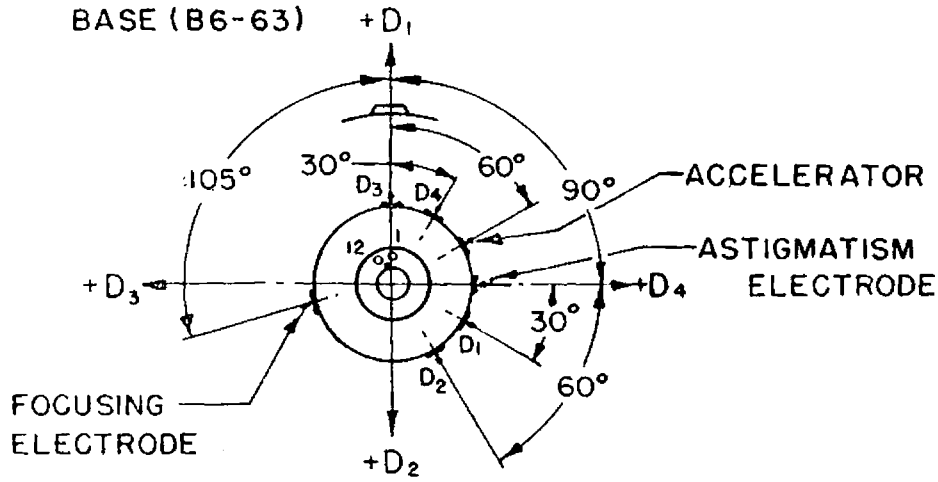

BOTTOM VIEW

Allen B. Du Mont Laboratories, Inc.
Clifton, New Jersey

DE-5845-4
5-27-60
FORM 809-C6-4-55-BH