SYLVANIA

engineering data service

SYLVANIA
12ABP7 12ABP7A
12ABP14
12ABP14A
12ABP19
12ABP19A

CHARACTERISTICS

GENERAL DATA

Focusing Method	Electrostatic		
Deflection Method	Magnetic		
Deflection Angle (approx.)	55 Degrees		
Phosphor	P7	P14	P19
Fluorescence	Blue	Purple	Orange
Phosphorescence	Yellow	Yellow	Orange
Persistence	Long	Medium-Long	Long
Faceplate	Gray Filter Glass		
Light Transmittance	74 Percent		

ELECTRICAL DATA

Heater Voltage	6.3 Volts
Heater Current	0.6 ±10% Ampere
Direct Interelectrode Capacitances (approx.)	
Cathode to All Other Electrodes	5 μμf
Grid No. 1 to All Other Electrodes	6 μμf

MECHANICAL DATA

Minimum Useful Screen Diameter	11 Inches
Bulb Contact (Recessed Small Cavity Cap)	J1-21
Base (Small Shell Duodecal 6-Pin)	B6-63
Basing	12M
Bulb Contact Aligns with Vacant Pin Position No. 3	±10 Degrees

RATINGS

MAXIMUM RATINGS (Absolute Maximum Values)

Anode Voltage	13,200 Volts dc
Grid No. 4 Voltage (Focusing Electrode)	-550 to 1100 Volts dc
Grid No. 2 Voltage	770 Volts dc
Grid No. 1 Voltage	
Negative Bias Value	200 Volts dc
Positive Bias Value[1]	0 Volts dc
Positive Peak Value	0 Volts
Peak Heater-Cathode Voltage	
Heater Negative with Respect to Cathode	200 Volts dc
Heater Positive with Respect to Cathode	200 Volts dc

TYPICAL OPERATING CONDITIONS

Anode Voltage[2]	10,000 Volts dc
Grid No. 4 Voltage for Focus[3]	0 to 300 Volts dc
Grid No. 2 Voltage	300 Volts dc
Grid No. 1 Voltage for Cutoff[4]	-28 to -72 Volts dc
Alignment Magnet Field Strength[5]	0 to 4 Gausses

MAXIMUM CIRCUIT VALUES

Grid No. 1 Circuit Resistance	1.5 Megohms Max.

QUICK REFERENCE DATA

Special Purpose Tube
12" Direct Viewed
Round Glass Type
Spherical Faceplate
Gray Filter Glass
Magnetic Deflection
Electrostatic Focus

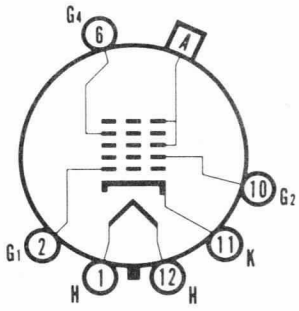

12-M

SYLVANIA ELECTRIC PRODUCTS INC.

TELEVISION PICTURE TUBE DIVISION
SENECA FALLS, NEW YORK

Prepared and Released By The
TECHNICAL PUBLICATIONS SECTION
EMPORIUM, PENNSYLVANIA

NOVEMBER, 1957

NOTES:

1. *At or near this rating, the effective resistance of the anode supply should be adequate to limit the anode input power to 6 watts. The screen of the 12ABP19 can be permanently damaged should the current density be permitted to rise too high. To prevent burning, minimum beam current densities should be employed.*
2. *Brilliance and definition decrease with decreasing anode voltage. In general, anode voltage should not be less than 8,000 volts.*
3. *With E_{g1} adjusted for Ib = 100 microamperes, E_{g4} is adjusted for best overall focus of a 7-1/2" x 10" raster pattern.*
4. *Visual extinction of focused raster. Extinction of stationary focused spot will require that these values be about 5 volts more negative.*
5. *For optimum quality of the focused spot, use of a beam alignment magnet is recommended. It should be an adjustable magnet of the specified strength, located approximately 5 1/16" from the reference line.*

12ABP7A, 12ABP14A, 12ABP19A

These types are identical to the 12ABP7, 12ABP14, 12ABP19 respectively, except that they employ aluminized screens.

WARNING:

X-ray radiation shielding may be necessary to protect against possible danger of personal injury from prolonged exposure at close range if this tube is operated at higher than the Manufacturer's Maximum Rated Anode Voltage or 16,000 volts, whichever is less.

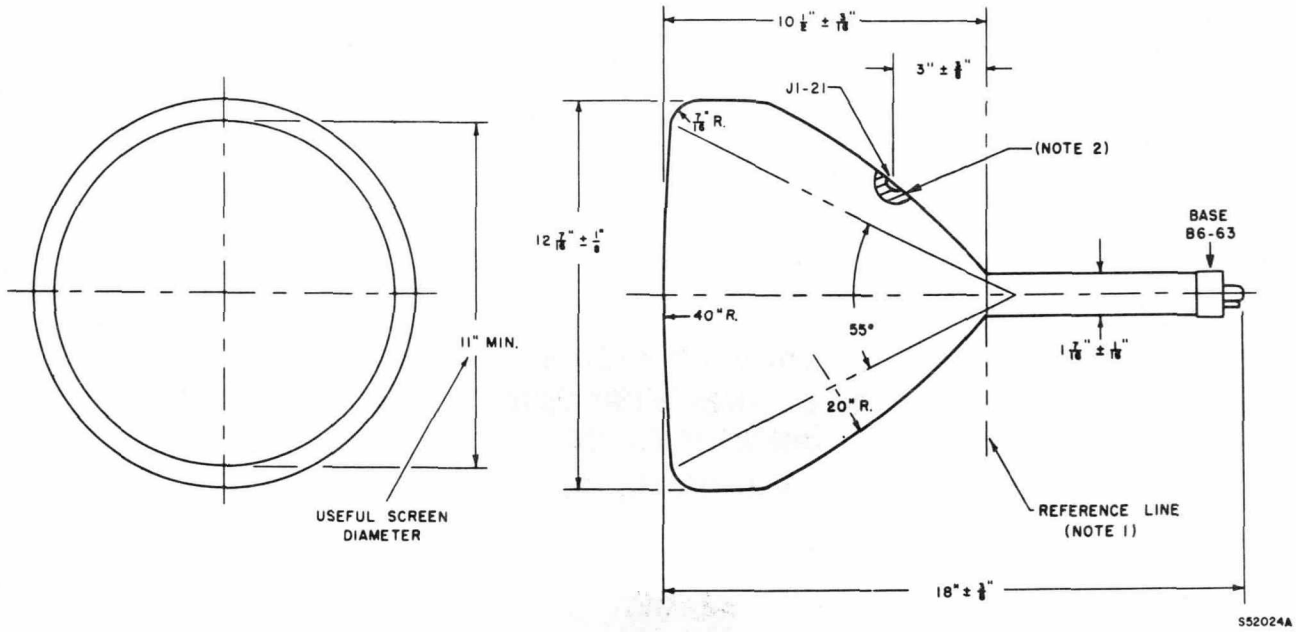

DIAGRAM NOTES:

1. *Reference line is the point where a 1.500 $^{+.003}_{-.000}$ diameter ring gauge 2 inches long, will stop.*
2. *Anti-corona Coating 1-1/2" minimum radius concentric with contact. Do not handle tube by the part of the bulb having the anti-corona coating.*