KUTHE
1257
HYDROGEN
THYRATRON

DESCRIPTION:

THE 1257 IS A UNIPOTENTIAL CATHODE, THREE ELEMENT HYDROGEN FILLED THYRATRON DESIGNED FOR A NETWORK DISCHARGE SERVICE. IN SUCH SERVICE, IT IS SUITABLE FOR PRODUCING PULSE OUTPUTS OF 33 MEGAWATTS AT AN AVERAGE POWER LEVEL OF MORE THAN 40 KW.

THE SPECIAL FEATURES OF THE 1257 INCLUDE AN INTERNAL HYDROGEN-RESERVOIR CAPABLE OF PRODUCING A WIDE RANGE OF HYDROGEN PRESSURE AND MAINTAINING THIS PRESSURE AT THE DESIRED VALUE THROUGHOUT ITS USEFUL LIFE.

ELECTRICAL DATA, GENERAL:	NOM.	MIN.	MAX.		
HEATER VOLTAGE	6.3	6.0	6.6		VOLTS A.C.
HEATER CURRENT (AT 6.3 VOLTS)		20.0	40.0		AMPERES
HEATER (NOTE 1)					
RESERVOIR VOLTAGE (NOTE 2)		3.5	6.0		VOLTS
RESERVOIR CURRENT AT 4.5 VOLTS		3.0	8.0		AMPERES
MINIMUM HEATING TIME				15	MINUTES

MECHANICAL DATA, GENERAL:		
MOUNTING POSITION	VERTICAL ONLY,	BASE DOWN
BASE		PER OUTLINE
ANODE CAP		PER OUTLINE
COOLING (NOTE 3)		
NET WEIGHT	10	POUNDS
DIMENSIONS		SEE OUTLINE

RATINGS:

Max. Peak Anode Voltage, Forward	33.0	Kilovolts
Max. Peak Anode Voltage, Inverse (Note 4)	33.0	Kilovolts
Min. Anode Supply Voltage	3.5	Kilovolts d.c.
Max. Peak Anode Current	2000	Amperes
Max. Average Anode Current	2.6	Amperes
Max. RMS Anode Current (Note 5)	60	Amperes a.c.
Max. EPY x IB x PRR	20 X 109	
Max. Anode Current Rate of Rise	10,000	Amperes/μSecond
Peak Trigger Voltage (Note 6)		
Max. Peak Inverse Trigger Voltage	650	Volts
Max. Anode Dealy Time (Note 7)	1.0	Microsecond
Max. Anode Delay Time Drift	0.10	Microsecond
Max. Time Jitter (Note 8)	0.01	Microsecond (initial)
	0.02	μSecond (end of life)
Ambient Temperature	-55° to +75°	Cent.

TYPICAL OPERATION AS PULSE MODULATOR, DC RESONANT CHARGING:

Peak Network Voltage	33.0	20.0	Kilovolts
Pulse Repetition Rate	310	1500	Pulses/sec.
Pulse Length	2.5	1.3	Microsecond
Pulse Forming Network Impedance	8.6	15.6	Ohms
Trigger Voltage	1500	1500	Volts
Peak Power Output (Resistive Load 92% Zn)	31	6.2	Megawatt
Peak Anode Current	2000	667	Amperes
Average Anode Current	1.55	1.3	Amperes d.c.

Note 1:

Cathode connected to center of cathode heater.

Note 2:

Reservoir voltage is marked on the base of each VC-1257. This is the correct voltage for one typical operating condition but is not the optimum value for all types of operation. This value may be used initially in new applications and the optimum value may then be obtained by exploring the range of voltage on either side of that marked on the tube. Excess reservoir voltage will result in a failure of the thyratron to deionize between pulses (continuous conduction). Insufficient reservoir voltage will result in excess anode dissipation as indicated by visible heating of the anode. The optimum reservoir voltage is the midpoint between these two extremes. In certain applications it may be necessary to provide a regulated source to assure operation within the permissible range of reservoir voltages. Consult manufacturer for starting program if necessary.

NOTE 3:

COOLING OF THE ANODE LEAD IS PERMISSIBLE, BUT THERE SHALL BE NO AIR BLAST DIRECTLY ON THE BULB.

NOTE 4:

DURING THE FIRST 25 MICROSECONDS AFTER CONDUCTION, THE PEAK INVERSE ANODE VOLTAGE SHALL NOT EXCEED 5 KV.

NOTE 5:

THE ROOT MEAN SQUARE ANODE CURRENT SHALL BE COMPUTED AS THE SQUARE ROOT OF THE PRODUCT OF PEAK CURRENT AND THE AVERAGE CURRENT.

NOTE 6:

THE PULSE PRODUCED BY THE DRIVER CIRCUIT SHALL HAVE THE FOLLOWING CHARACTERISTICS WHEN VIEWED AT THE 1257 SOCKET WITH THE TUBE REMOVED.

A.	AMPLITUDE	1300-2500 VOLTS
B.	DURATION	2 MICROSECONDS (AT 70% POINTS)
C.	TIME OF RISE	0.35 MICROSECONDS (MIN.)
D.	IMPEDANCE	10-25 OHMS

THE LIMITS OF ANODE TIME DELAY AND ANODE TIME JITTER ARE BASED ON THE MINIMUM TRIGGER. USING THE HIGHEST PERMISSIBLE TRIGGER VOLTAGE AND LOWEST TRIGGER SOURCE IMPEDANCE MATERIALLY REDUCES THESE VALUES BELOW THE LIMITS SPECIFIED.

NOTE 7:

THE TIME OF ANODE DELAY IS MEASURED BETWEEN THE 26 PERCENT POINT ON THE RISING PORTION OF THE UNLOADED GRID VOLTAGE PULSE AND THE POINT AT WHICH ANODE CONDUCTION FIRST EVIDENCES ITSELF ON THE LOADED GRID PULSE.

NOTE 8:

TIME JITTER IS MEASURED AT THE 50 PERCENT POINT ON THE ANODE CURRENT PULSE.

ADDITIONAL INFORMATION FOR SPECIFIC APPLICATIONS CAN BE OBTAINED FROM THE

ELECTRON TUBE APPLICATIONS SECTION
ITT COMPONENTS DIVISION - P.O. BOX 412
CLIFTON, NEW JERSEY

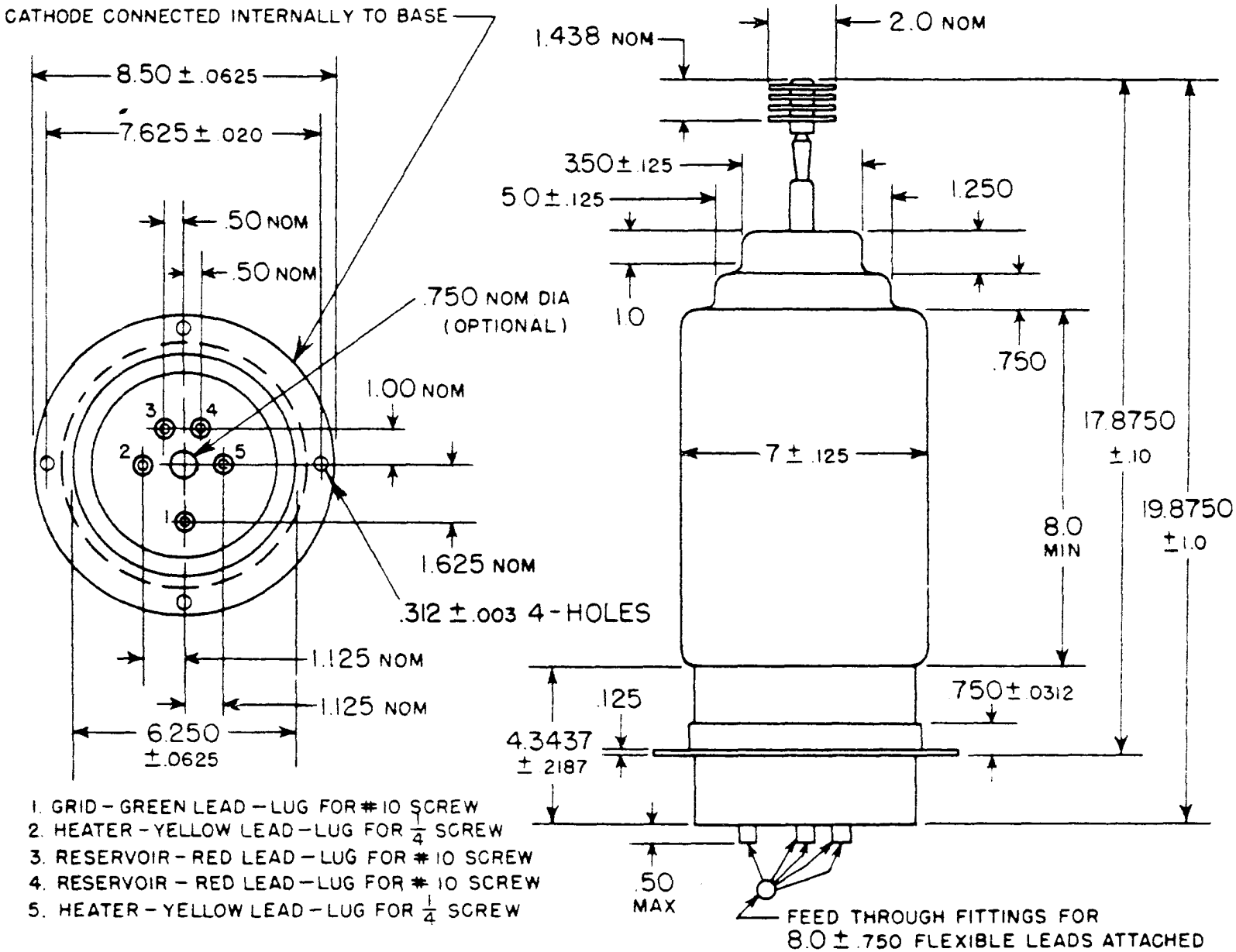
CATHODE CONNECTED INTERNALLY TO BASE
8.50 ± .0625
7.625 ± .020
.50 NOM
.50 NOM
.750 NOM DIA (OPTIONAL)
1.00 NOM
1.625 NOM
.312 ± .003 4-HOLES
1.125 NOM
1.125 NOM
6.250 ± .0625
1.438 NOM
2.0 NOM
3.50 ± .125
5.0 ± .125
1.250
1.0
.750
17.8750 ± .10
7 ± .125
8.0 MIN
19.8750 ± 1.0
.125
.750 ± .0312
4.3437 ± .2187
.50 MAX
FEED THROUGH FITTINGS FOR 8.0 ± .750 FLEXIBLE LEADS ATTACHED
1. GRID - GREEN LEAD - LUG FOR # 10 SCREW
2. HEATER - YELLOW LEAD - LUG FOR 1/4 SCREW
3. RESERVOIR - RED LEAD - LUG FOR # 10 SCREW
4. RESERVOIR - RED LEAD - LUG FOR # 10 SCREW
5. HEATER - YELLOW LEAD - LUG FOR 1/4 SCREW