CHARACTERISTICS

GENERAL DATA

Focusing Method	Magnetic
Deflecting Method	Magnetic
Deflection Angle (Approx.)	50 Degrees

Types*	10KP7 10KP7A	10KP7B
Fluorescence	Blue-White	Blue-White
Phosphorescence	Yellow	Yellow
Persistence	Long	Long
Screen	——	Aluminized
Faceplate	Gray Filter Glass	Gray Filter Glass
Light Transmittance (approx.)	77	77

*In addition to the types shown, the 10KP- can be supplied with several other screen phosphors.

ELECTRICAL DATA

Heater Voltage	6.3 Volts
Heater Current	0.6 ± 10% Ampere
Direct Interelectrode Capacitances (approx.)	
Cathode to All Other Electrodes	5 $\mu\mu$f
Grid No. 1 to All Other Electrodes	8 $\mu\mu$f

MECHANICAL DATA

Minimum Useful Screen Diameter	9 Inches
Bulb Contact (Recessed Small Cavity Cap)	J1-21
Bulb	J84C or J84D
Base (Small-Shell Duodecal 5-Pin)	B5-57
Basing	12D
Bulb Contact Aligns with Vacant Pin Position No. 3	±10 Degrees
Weight (approx.)	9 Pounds

RATINGS

MAXIMUM RATINGS (Absolute Maximum Values)

Anode Voltage		
10KP7, 10KP7A	11,000 Volts	dc
10KP7B	13,200 Volts	dc
Grid No. 2 Voltage	770 Volts	dc

QUICK REFERENCE DATA

10" Direct Viewed
Round Glass Type
Spherical, Gray Faceplate
10KP7B, Aluminized Screen
Magnetic Deflection
Magnetic Focus
10KP7A and 10KP7B, High Resolution

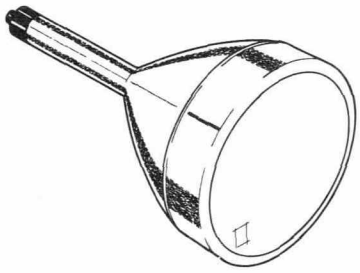

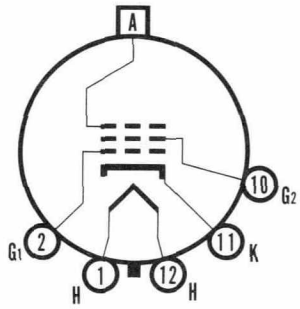

12-D

SYLVANIA
ELECTRONIC TUBES

A Division of
Sylvania Electric Products Inc.

PICTURE TUBE OPERATIONS
SENECA FALLS, NEW YORK

Prepared and Released By The
TECHNICAL PUBLICATIONS SECTION
EMPORIUM, PENNSYLVANIA

MARCH, 1960

File Under
SPECIAL AND GENERAL PURPOSE
CATHODE RAY TUBES

MAXIMUM RATINGS (Absolute Maximum Values) (Cont'd)

Grid No. 1 Voltage				
Negative Bias Value			200 Volts	dc
Positive Bias Value			0 Volts	dc
Positive Peak Value			2 Volts	
Peak Heater Cathode Voltage				
	10KP7	**10KP7A**	**10KP7B**	
Heater Negative with Respect to Cathode	140	200	Volts	
During Warm-up Period not to Exceed 15 Seconds			450 Volts	
After Equipment Warm-up Period			200 Volts	
Heater Positive with Respect to Cathode	140	200	200 Volts	

TYPICAL OPERATING CONDITIONS

Anode Voltage[1]	9000 Volts	dc
Grid No. 2 Voltage	250 Volts	dc
Grid No. 1 Voltage Required for Cutoff[2]	−27 to −63 Volts	dc
Focusing Coil Current (Approx.)[3]	112 ± 15% Ma	dc
Line Width A[4] (10KP7A and 10KP7B)	0.38 mm	Max.

MAXIMUM CIRCUIT VALUES

Grid No. 1 Circuit Resistance	1.5 Megohms Max.

NOTES:

1. *Brilliance and definition decrease with decreasing Anode Voltage. In general, the Anode Voltage should not be less than 7000 volts for Type 10KP7B and not less than 5000 volts for Types 10KP7 and 10KP7A.*
2. *Visual extinction of focused spot.*
3. *For JEDEC focusing coil 106 or equivalent, center of air gap 3¼ inches from Reference Line at an anode current of 200 μa.*
4. *Measured in accordance with MIL-E-1, at an anode current of 200 μa.*

WARNING:

X-ray radiation shielding may be necessary to protect against possible danger of personal injury from prolonged exposure at close range if this tube is operated at higher than the manufacturer's Maximum Rated Anode Voltage or 16,000 volts, whichever is less.

OUTLINE

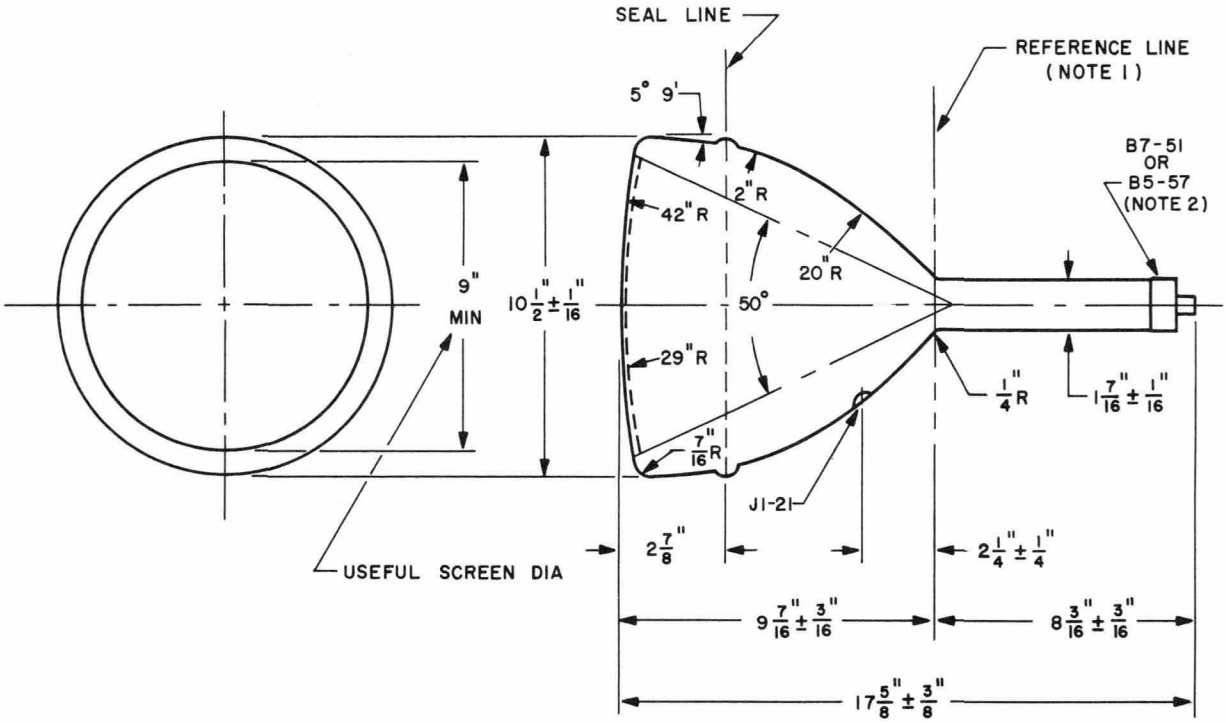

DIAGRAM NOTES:

1. *Reference line is determined by the plane of the upper edge of the reference line gauge (JEDEC No. 112) when the gauge is seated on the cone.*
2. *Anode terminal aligns with Pin Position No. 3 ± 10 degrees and is on same side of bulb as Pin Position No. 3.*