ELECTRONIC INNOVATIONS IN ACTION

TUBES

—PRODUCT INFORMATION—

Compactron Beam Pentode

10JA5

FOR TV VERTICAL-DEFLECTION AMPLIFIER APPLICATIONS

- COLOR TV TYPE
- PLATE DISSIPATION 19 WATTS
- VERTICAL OUTPUT PENTODE
- HIGH PERVEANCE

The 10JA5 is a compactron beam-power pentode primarily designed for use as the vertical-deflection amplifier in color television receivers.

GENERAL

ELECTRICAL

Cathode - Coated Unipotential

Heater Characteristics and Ratings

Heater Voltage, AC or DC★	10.5	Volts
Heater Current●	0.6 ± 0.04	Amperes
Heater Warm-up Time, average♦	11	Seconds
Direct Interelectrode Capacitances, approximate▲		
Grid-Number 1 to Plate: (g1 to p)	0.66	pf
Input: g1 to (h+k+g2+b.p)	14	pf
Output: p to (h+k+g2+b.p.)	7.5	pf

MECHANICAL

Operating Position - Any
Envelope - T-12, Glass
Base - E12-74, Button 12-Pin
Outline Drawing - EIA 12-57

Maximum Diameter	1.563	Inches
Minimum Diameter	1.437	Inches
Maximum Over-all Length	3.125	Inches
Maximum Seated Height	2.750	Inches
Minimum Seated Height	2.500	Inches

PHYSICAL DIMENSIONS

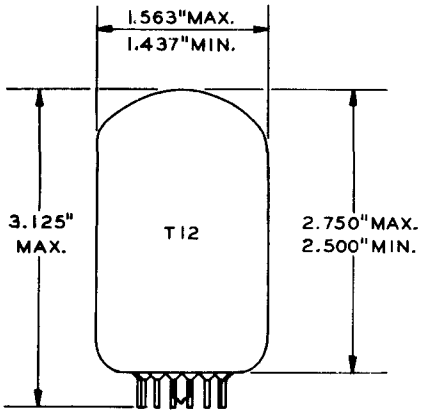

EIA 12-57

TERMINAL CONNECTIONS ⊕

Pin 1 - Heater
Pin 2 - Grid Number 1
Pin 3 - Grid Number 2 (Screen)
Pin 4 - Cathode and Beam Plates
⊕ Pin 5 - No Connection
Pin 6 - Plate
⊕ Pin 7 - No Connection
⊕ Pin 8 - No Connection
Pin 9 - Grid Number 1
Pin 10 - Grid Number 2 (Screen)
Pin 11 - Cathode and Beam Plates
Pin 12 - Heater

BASING DIAGRAM

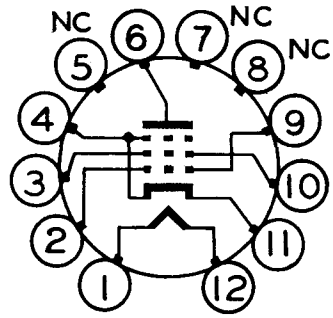

EIA 12EY

The tubes and arrangements disclosed herein may be covered by patents of General Electric Company or others. Neither the disclosure of any information herein nor the sale of tubes by General Electric Company conveys any license under patent claims covering combinations of tubes with other devices or elements. In the absence of an express written agreement to the contrary, General Electric Company assumes no liability for patent infringement arising out of any use of the tubes with other devices or elements by any purchaser of tubes or others.

MAXIMUM RATINGS

VERTICAL-DEFLECTION AMPLIFIER SERVICE □ — DESIGN-MAXIMUM VALUES

DC Plate Voltage	400	Volts
Peak Pulse Plate Voltage	2500	Volts
Screen Voltage	300	Volts
Peak Negative Grid-Number 1 Voltage	250	Volts
Plate Dissipation †	19	Watts
Screen Dissipation	2.75	Watts
DC Cathode Current	110	Milliamperes
Peak Cathode Current	260	Milliamperes
Heater-Cathode Voltage		
Heater Positive with Respect to Cathode		
DC Component	100	Volts
Total DC and Peak	200	Volts
Heater Negative with Respect to Cathode		
Total DC and Peak	200	Volts
Grid-Number 1 Circuit Resistance		
With Fixed Bias	1.0	Megohms
With Cathode Bias	2.2	Megohms

Design-Maximum ratings are limiting values of operating and environmental conditions applicable to a bogey electron tube of a specified type as defined by its published data and should not be exceeded under the worst probable conditions.

The tube manufacturer chooses these values to provide acceptable serviceability of the tube, making allowance for the effects of changes in operating conditions due to variations in the characteristics of the tube under consideration.

The equipment manufacturer should design so that initially and throughout life no design-maximum value for the intended service is exceeded with a bogey tube under the worst probable operating conditions with respect to supply-voltage variation, equipment component variation, equipment control adjustment, load variation, signal variation, environmental conditions, and variations in the characteristics of all other electron devices in the equipment.

CHARACTERISTICS AND TYPICAL OPERATION

AVERAGE CHARACTERISTICS

Plate Voltage	45	135	Volts
Screen Voltage	125	125	Volts
Grid-Number Voltage	0‡	−10	Volts
Plate Resistance, approximate	---	12000	Ohms
Transconductance	---	10300	Micromhos
Plate Current	210	95	Milliamperes
Screen Current	20	4.2	Milliamperes
Grid-Number Voltage, approximate			
Ib = 100 Microamperes	---	−33	Volts

NOTES

★ Heater voltage for a bogey tube at If = 0.600 amperes.

● The equipment designer should design the equipment so that heater current is centered at the specified bogey value, with heater supply variations restricted to maintain heater current within the specified tolerance.

♦ The time required for the voltage across the heater to reach 80 percent of the bogey value after applying 4 times the bogey heater voltage to a circuit consisting of the tube heater in series with a resistance equal to 3 times the bogey heater voltage divided by the bogey heater current.

▲ Without external shield.

⊕ Socket terminals 5, 7, and 8 should not be used as tie points.

□ For operation in a 525-line, 30-frame television system as described in "Standards of Good Engineering Practice Concerning Television Broadcast Stations", Federal Communications Commission. The duty cycle of the voltage pulse must not exceed 15 percent of one scanning cycle.

† In stages operating with grid-leak bias, an adequate cathode-bias resistor or other suitable means is required to protect the tube in the absence of excitation.

‡ Applied for short interval (two seconds maximum) so as not to damage tube.

AVERAGE PLATE CHARACTERISTICS

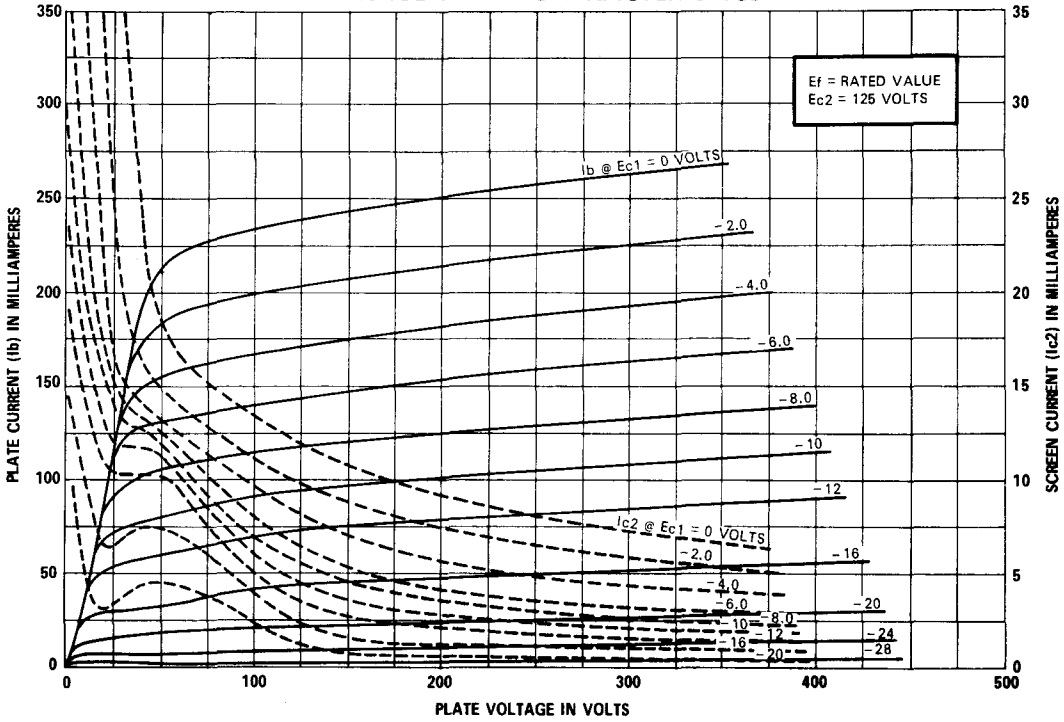

K-55611-TD373-1

AVERAGE PLATE CHARACTERISTICS

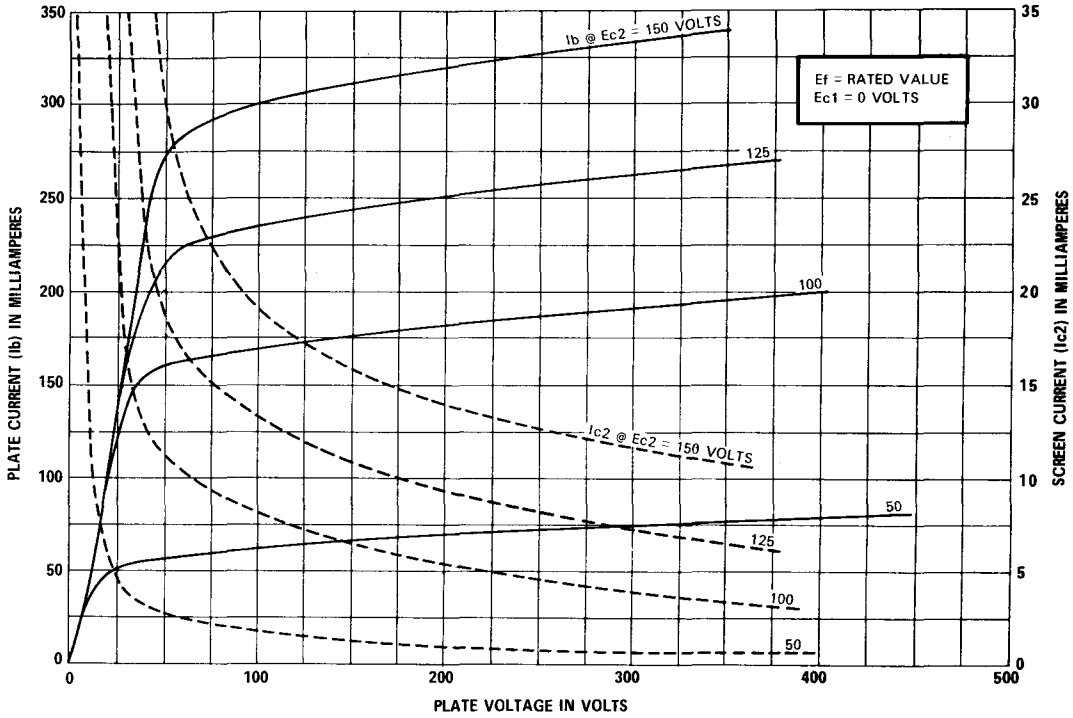

K-55611-TD373-2

AVERAGE TRANSFER CHARACTERISTICS

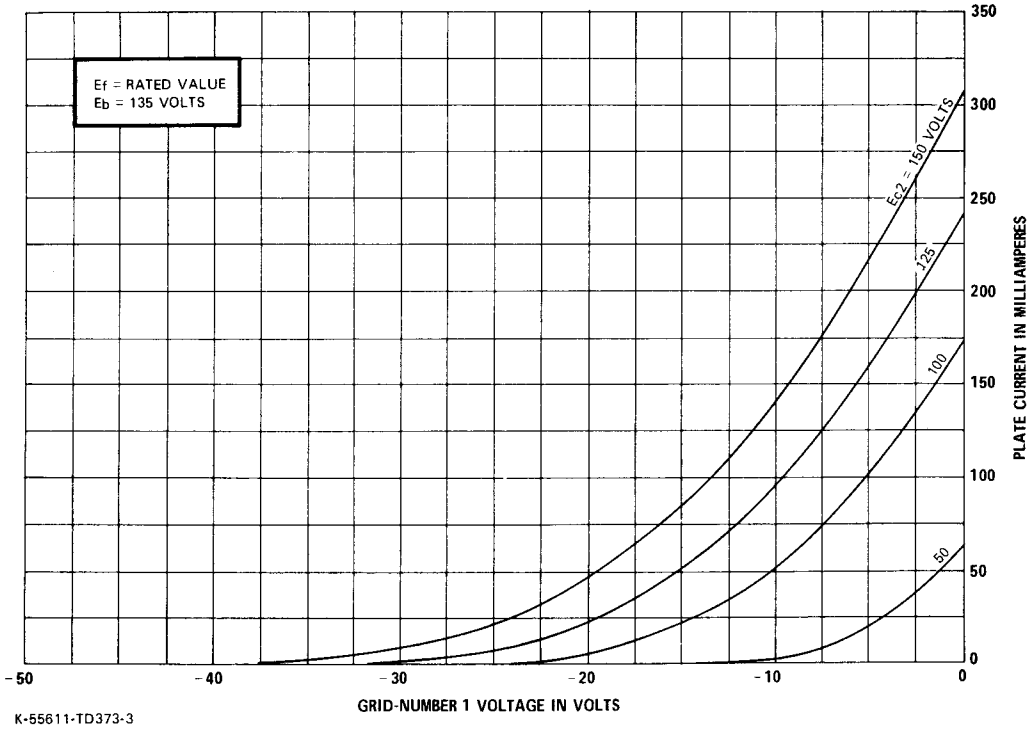

K-55611-TD373-3

AVERAGE TRANSFER CHARACTERISTICS

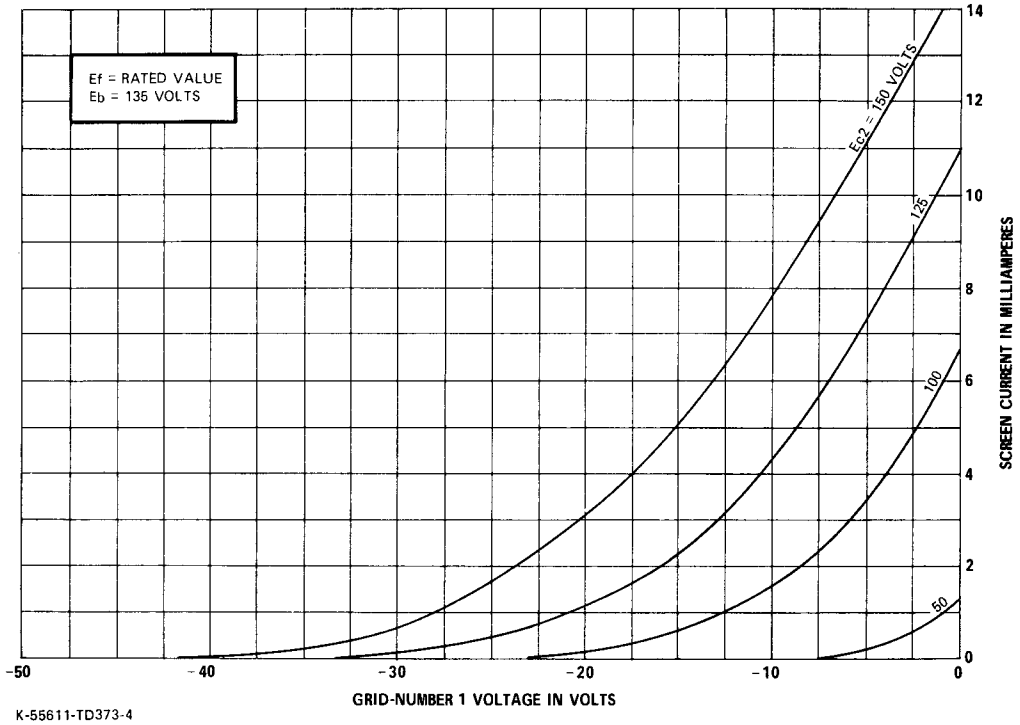

K-55611-TD373-4

AVERAGE TRANSFER CHARACTERISTICS

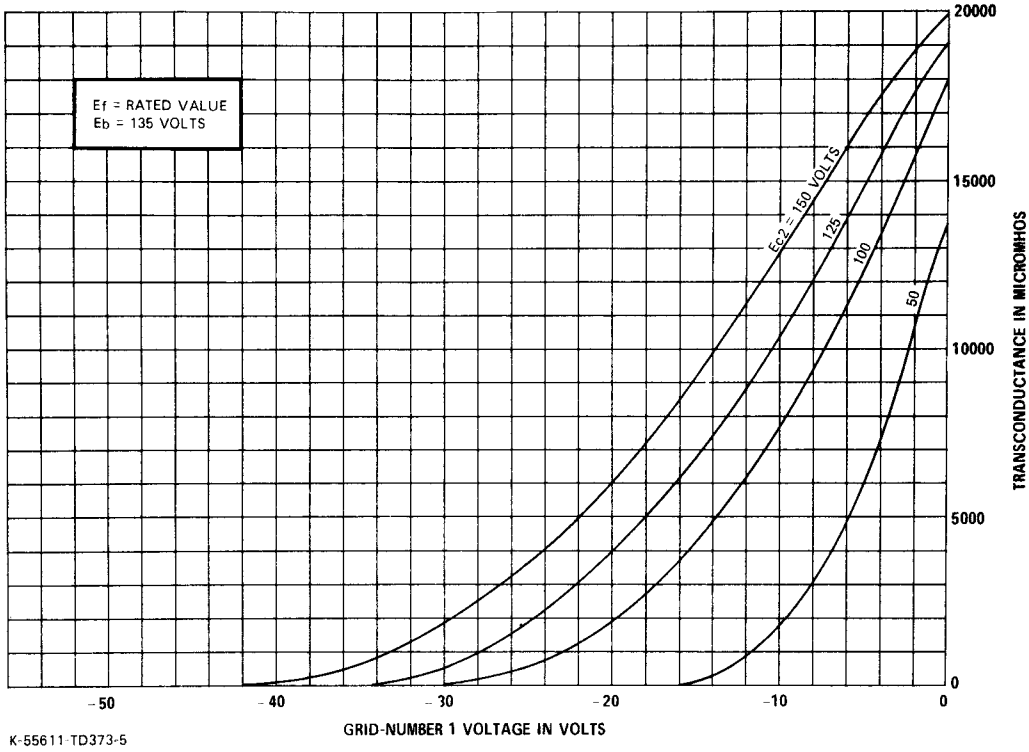

K-55611-TD373-5

TUBE PRODUCTS DEPARTMENT
Owensboro, Kentucky 42301

GENERAL ELECTRIC