CHARACTERISTICS

GENERAL DATA

Focusing Method . . . . . Magnetic
Deflecting Method . . . . . Magnetic
Deflection Angle (Approx.) . . . . . 50 Degrees

Phosphors*	Fluorescence	Phosphorescence	Persistence
P4	White	—	Medium
P7	Blue	Yellow	Long
P16	Violet	—	Extremely Short
P19	Orange	Orange	Long
P25	Orange	Orange	Long

Faceplate . . . . . Gray, Spherical-Aluminized

*In addition to the types shown, the 10ANP– can be supplied with several other screen phosphors.

ELECTRICAL DATA

Heater Voltage . . . . . 6.3 Volts
Heater Current . . . . . 0.3 ± 10 % Ampere
Direct Interelectrode Capacitances (Approx.)
Cathode to All Other Electrodes . . . . . 5 pf
Grid No. 1 to All Other Electrodes . . . . . 6 pf
Grid No. 2 to All Other Electrodes . . . . . 5 pf

MECHANICAL DATA

Minimum Useful Screen Diameter . . . . . 9 Inches
Overall Length . . . . . 16 Inches Max.
Bulb Contact (Recessed Small Cavity Cap) J1-21
Base[1] E9-37
Basing 9NB
Bulb Contact Alignment
Plane of J1-21 cap passes halfway between Pins No. 1 and No. 9 . . . . . ±10 Degrees
J1-21 Cap on Same Side as Pins No. 1 and No. 9

RATINGS

MAXIMUM RATINGS (Design Maximum Values)

Anode Voltage . . . . . 12,000 Volts dc
Grid No. 2 Voltage . . . . . 450 Volts dc
Grid No. 1 Voltage
Negative Bias Value . . . . . 200 Volts dc
Positive Bias Value . . . . . 0 Volts dc
Positive Peak Value . . . . . 0 Volts
Peak Heater-Cathode Voltage
Heater Negative with Respect to Cathode . . 180 Volts
Heater Positive with Respect to Cathode . . . 180 Volts

TYPICAL OPERATING CONDITIONS

Anode Voltage[2] . . . . . 9000 Volts dc
Grid No. 2 Voltage . . . . . 250 Volts dc
Grid No. 1 Voltage[3] . . . . . −15 to −45 Volts dc
Focusing Coil Current (Approx.)[6] . . . . . 40 to 60 Ma dc
Linewidth A[4] . . . . . 0.013 Inch Max.
Spot Position (Undeflected)[5] . . . . . ½ Inch
Modulation[4] . . . . . 40 Volts Max.

CIRCUIT VALUES

Grid No. 1 Circuit Resistance . . . . . 1.5 Megohms Max.

QUICK REFERENCE DATA

Special Purpose Tube
10″ Round Glass Type
Spherical Faceplate
Gray Glass
Aluminized Screen
Magnetic Deflection
Magnetic Focus
7/8″ Diameter Neck
Miniature Base
6.3 Volts—300 Ma Heater

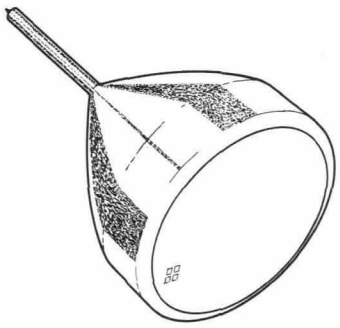

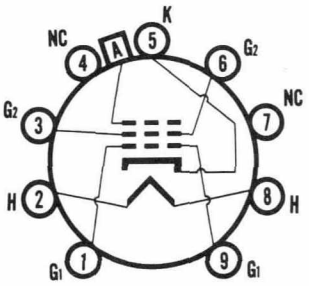

9NB

SYLVANIA ELECTRIC PRODUCTS INC.

Electronic Components Group
ELECTRONIC TUBE DIVISION
SENECA FALLS, NEW YORK

A Technical Publication
JUNE, 1965

File Under
SPECIAL AND GENERAL PURPOSE CATHODE RAY TUBES

NOTES:

1. *A socket with a center opening to clear the tubulation should be used. Care should be taken in handling the tube to avoid damaging the exposed tubulation and bending the base pins.*
2. *Brilliance and definition decrease with decreasing accelerator voltage. In general, accelerator voltage should not be less than 7000 volts.*
3. *Visual extinction of the undeflected focused spot.*
4. *Measured per MIL-E-1 specification at an anode current of 400 μa.*
5. *The center of the undeflected focused spot will fall within a circle of 1/2-inch radius concentric with the center of the tube face with the tube shielded.*
6. *Focusing coil current measured at an accelerator current of 100 μa, with the center of air gap of JEDEC Focus Coil No. 127, or equivalent, located 2-1/2 inches from reference line.*
7. *The P16, P19, and P25 screens can be permanently damaged if current density is permitted to rise too high. To prevent burning, minimum beam current densities should be employed.*

WARNING:

X-ray radiation shielding may be necessary to protect against possible danger of personal injury from prolonged exposure at close range if this tube is operated at higher than the manufacturer's Maximum Rated Anode Voltage or 16,000 volts, whichever is less.

OUTLINE

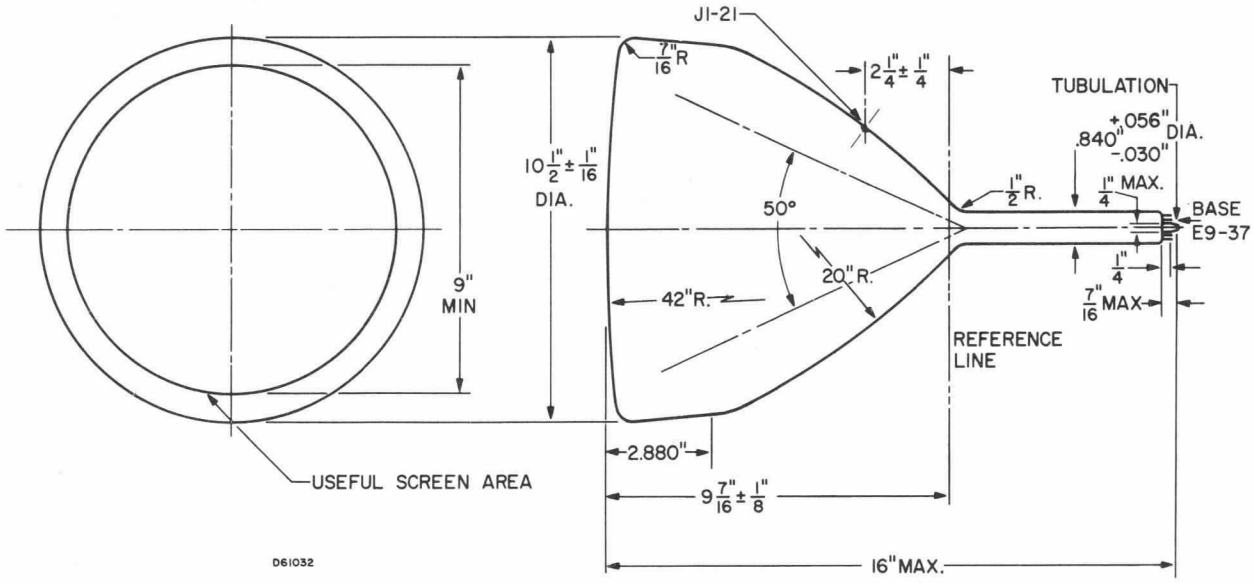

DIAGRAM NOTE:

1. *Reference line is determined by the point where leading edge of JEDEC G-112 reference line gauge (a cylinder 2" long and 1.500" + .003-.000" I.D.) will stop.*