from JEDEC release
#2650, Nov. 30, 1959

DuMONT

CATHODE-RAY TUBE

TYPE 10ALP-

The DuMont Type 10ALP- is a 10" diameter, single beam cathode-ray tube having electrostatic focus and deflection. This tube is designed for high voltage operation, and all leads are brought out through a Dimagnal collar-base. By means of the Dimagnal collar, the additional length taken up by standard bases and sockets is eliminated thereby making a more compact display.

The Type 10ALP- is designed to provide excellent performance characteristics for high precision applications. Pattern and deflection distortions, and deflection uniformity have been considerably improved through the use of special deflection plates.

A metal-backed screen is used to increase the light output and also prevent the building up of spurious charges on the screen by successive transients. In the study of single transients or low repetition rate signals these spurious charges may distort succeeding transients.

GENERAL CHARACTERISTICS

Electrical Data

Focusing Method	Electrostatic	
Deflecting Method	Electrostatic	
Direct Interelectrode Capacitances, Approximate		
Cathode to all	7.9	μμf
Grid No. 1 to all	9.6	μμf
D1 to D2	5.2	μμf
D3 to D4	2.3	μμf
D1 to all	11.0	μμf
D2 to all	11.0	μμf
D3 to all	5.9	μμf
D4 to all	5.9	μμf

Optical Data

Phosphor Number	2	7	14	19 (Note 1)	25
Fluorescent Color	Green	Blue	Blue	Orange	Orange
Phosphorescent Color	Green	Yellow	Orange	Orange	Orange
Persistence	Long	Long	Med. Long	Long	Very Long

Faceplate		
Light Transmission at center, Approximate	67	Percent

TL-1313 -2
9/25/59

Allen B. Du Mont Laboratories, Inc.
Clifton, New Jersey

DUMONT

CATHODE-RAY TUBE

TYPE 10ALP-

Mechanical Data

Overall Length	20 ± 1/4	Inches
Greatest Diameter of Bulb	10 1/2 ± 1/8	Inches
Minimum Useful Screen Diameter	9	Inches
Base (Dimagnal, 22-Pin Collar Base)	Special	
Basing	22 A	
Base Alignment		
D1D2 trace aligns with Collar Index Pin No. 1 and tube axis	± 10	Degrees
Positive voltage on D1 deflects beam approximately toward Collar Pin No. 1		
Positive voltage on D3 deflects beam approximately toward Collar Pin No. 18		
Trace Alignment		
Angle between D3D4 and D1D2 traces	90 ± 1	Degrees

RATINGS (ABSOLUTE MAXIMUM VALUES)

Heater Voltage	6.3	Volts
Heater Current at 6.3 Volts	0.6 ± 10%	Ampere
Accelerator Voltage	10,000	Max. Volts DC
Accelerator Input	6	Max. Watts
Focusing Electrode Voltage	3,500	Max. Volts DC
Grid No. 1 Voltage		
Negative Bias Value	300	Max. Volts DC
Positive Bias Value	0	Max. Volts DC
Positive Peak Value	0	Max. Volts
Peak Heater-Cathode Voltage		
Heater negative with respect to cathode		
During warm-up period not to exceed 15 seconds	410	Max. Volts
After equipment warm-up period	180	Max. Volts
Heater Positive with respect to cathode	180	Max. Volts
Peak Voltage between Accelerator and any Deflection Electrode	1,800	Max. Volts

DUMONT

CATHODE-RAY TUBE

TYPE 10ALP-

TYPICAL OPERATING CONDITIONS

Accelerator Voltage	8,000	Volts
Focusing Electrode Voltage	2250 to 3100	Volts
Grid No. 1 Voltage [2]	-155 to -205	Volts
Deflection Factors:		
D1 and D2	155 to 189	Volts DC/Inch
D3 and D4	151 to 185	Volts DC/Inch
Deflection Factor Uniformity [3]	1.5 %	Max.
Deflection Defocusing [4,5]	1:3	Ratio
Pattern Distortion[6]	2%	Max.
Modulation [5]	20	Max. Volts DC
Line Width "A" [5]	.012	Max. Inches
Focusing Electrode Current for any operating condition	-15 to +10	μA
Spot Position (focused and undeflected) [7]	Within a 20 -mm square	

For Accelerator Voltage not shown in the preceding table, the following can be used as a guide:

Focusing Electrode Voltage	28% to 38.8% of Accelerator Volts
Grid No. 1 Voltage	1.94% to 2.56% of Accelerator Volts
D1 and D2	19.4 to 23.6 Volts DC per Inch per Kilovolt of Accelerator
D3 and D4	18.9 to 23.1 Volts DC per Inch per Kilovolt of Accelerator

MAXIMUM CIRCUIT VALUES

Grid No. 1 Circuit Resistance	1.5	Max. Megohms
Resistance in any Deflecting Electrode Circuit [8]	5.0	Max. Megohms

NOTES

1. To prevent burning, minimum beam current densities should be used.

2. Visual extinction of undeflected, focused spot.

3. The deflection factor (for both D1D2 and D3D4 plate pairs separately) for a deflection of 75% of the useful scan will not differ for the deflection factor for a deflection at 25% of the useful scan by more than the indicated value.

NOTES (Continued)

4. The ratio of the line width of a 2-inch long trace, adjusted for best center focus, to the line width measured on the faceplate axis when the trace is deflected perpendicularly ± 4 inches from the face center by a balanced DC voltage, will not be greater than the specified value.

5. For an Ib3 of 2 μADC measured in accordance with MIL-E-1 specifications.

6. All portions of a raster pattern, adjusted so its widest points just touch the sides of a 6.12-inch square, will fall within the area bounded by the 6.12-inch square and an inscribed 6-inch square.

7. Centered with respect to the tube face with tube shielded.

8. It is recommended that the deflecting-electrode circuit resistances be approximately equal.

DUMONT

CATHODE-RAY TUBE
TYPE 10ALP-

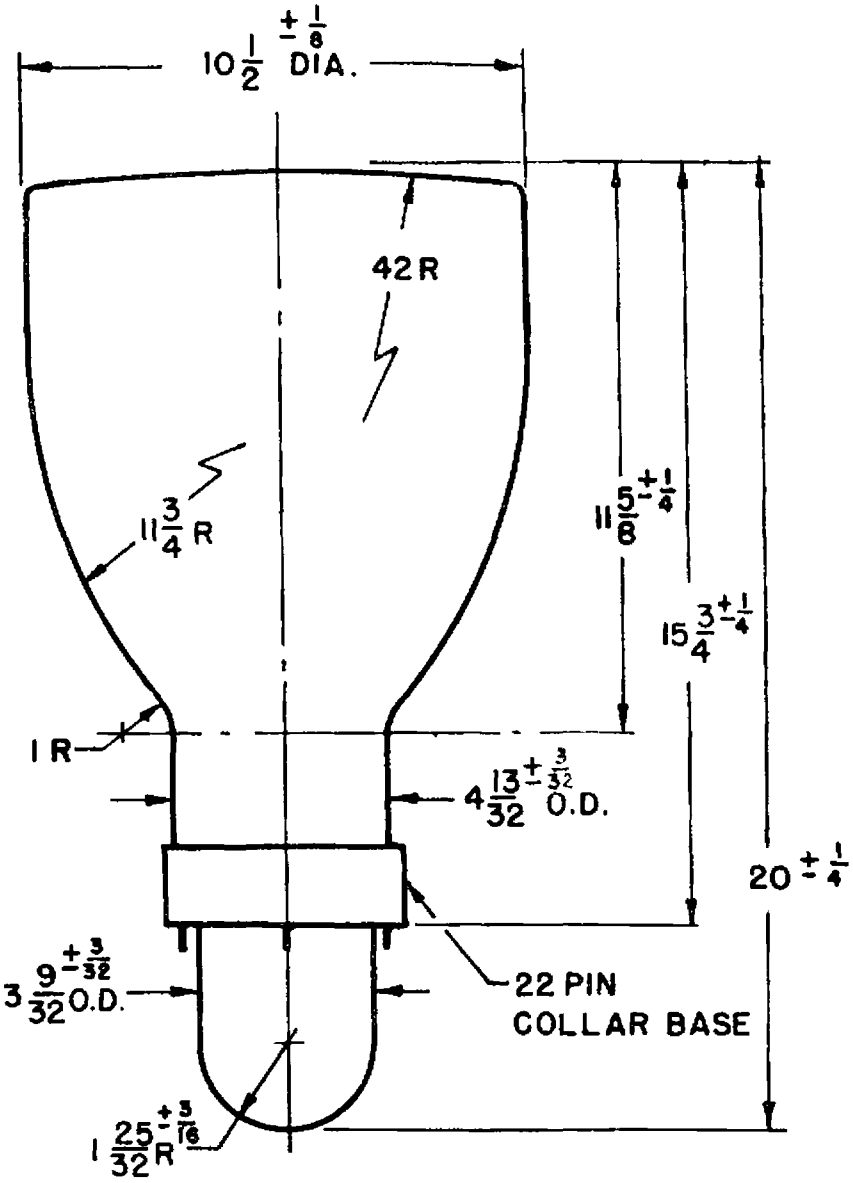

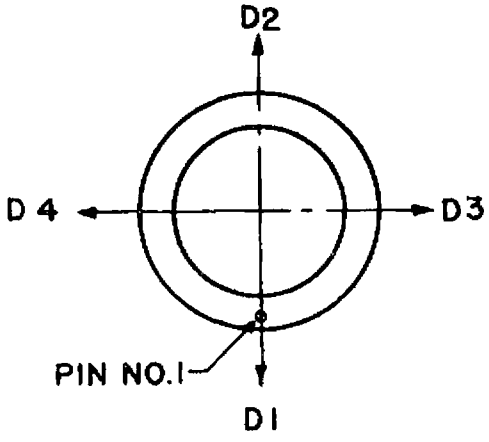

BOTTOM VIEW OF BASE

22A

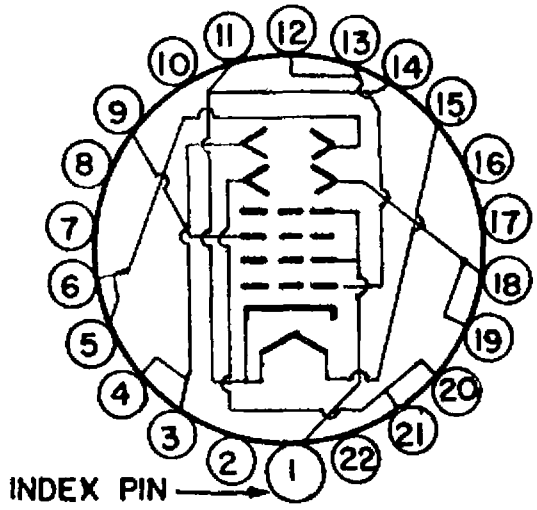

BOTTOM VIEW

PIN NO	ELEMENT
1	– ACCELERATOR
3&4	– DEFLECTING ELECTRODE D_1
5&6	– DEFLECTING ELECTRODE D_2
9	– FOCUSING ELECTRODE
11 &14	– HEATER & CATHODE
12&13	– GRID NO.1
15	– HEATER
18 &19	– DEFLECTING ELECTRODE D_3
20 &21	– DEFLECTING ELECTRODE D_4